THIS DRAWING IS UNPUBLISHED. RELEASED FOR PUBLICATION -.-.
© COPYRIGHT - By TE Connectivity ALL RIGHTS RESERVED.

LOC	DIST
HB	—

REVISIONS

P	LTR	DESCRIPTION		DATE	DWN	APVD
	D	CHANGE THE WIDTH OF THE TERMINAL PIN FROM 0.64MM TO 0.8MM	ECO-14-011875	04-AUG-14	Q.L	B.F

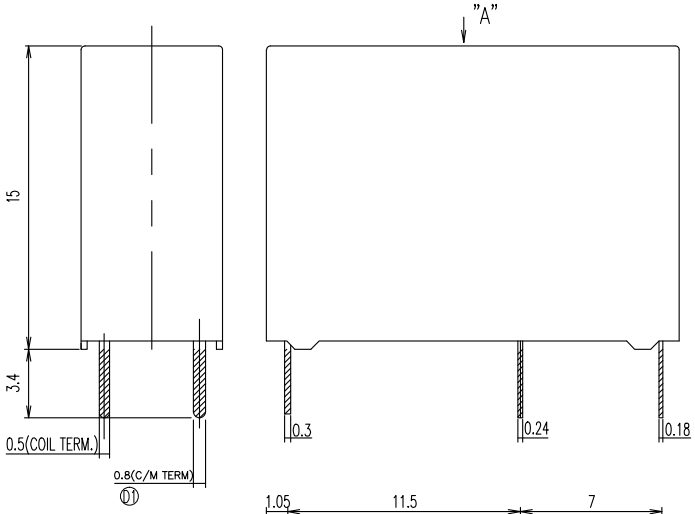

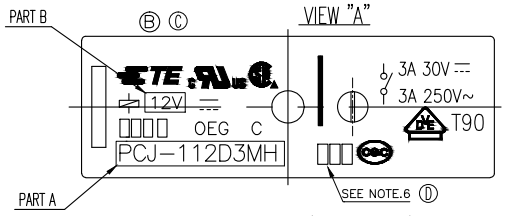

DRILLING DIAGRAM (BOTTOM VIEW)

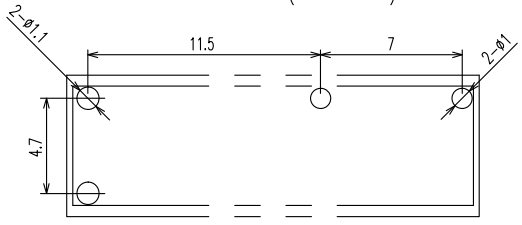

CIRCUIT DIAGRAM (BOTTOM VIEW)

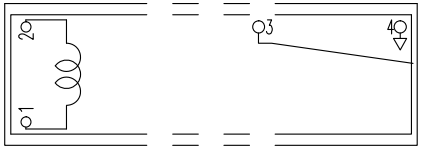

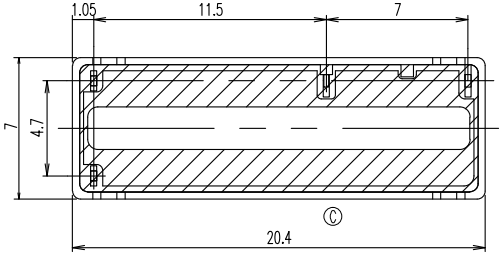

NOTES:

1. SOLDER DIP:STATIONARY TERMINAL AND MOVABLE SPRING
   COIL TERMINAL and COIL TERMINAL TO MAGNETIC WIRE
Ⓒ 2. ONE CHARACTER DISTINGUISH THE LINE IDENTITY, SUCH AS: A, B...
3. TERMINAL DIMENSION IS BEFORE SOLDER DIP.
Ⓒ 4. FOR THE TIN-PLATING OF THE PINS:
   +0.1mm FOR WIDTH,THICKNESS AND DIAMETER.
   +0.5mm FOR LENGTH.
Ⓒ 5. MARKING FROM INK CHANGE TO LASER
Ⓓ 6. ADD LOT NO. SYSTEM AS FOLLOWING;

1 1 A
I II III

I. DIGITS FOR DAY OF THE WEEK
   1...MONDAY IN THIS WEEK;
   2...TUESDAY IN THIS WEEK;
   .....
   7...SUNDAY IN THIS WEEK
II. DIGITS FOR SHIFT OF THE DAY
   1...DAY SHIFT IN THIS DAY;
   2...NIGHT SHIFT IN THIS DAY;
III. ONE CHARACTER DISTINGUISH THE LINE IDENTITY, SUCH AS: A,B.....Z

DIAGRAM DIMENSION	TOLERENCE
0.99mm max.	±0.1mm
1 - 2.99mm	±0.2mm
3mm min.	±0.3mm

THIS DRAWING IS A CONTROLLED DOCUMENT.

DIMENSIONS: mm

TOLERANCES UNLESS OTHERWISE SPECIFIED:
0 PLC ± –
1 PLC ± –
2 PLC ± –
3 PLC ± –
4 PLC ± –
ANGLES ± –

MATERIAL –
FINISH –

DWN H.SASAKI
CHK Y.OIKAWA
APVD A.NAGAI
PRODUCT SPEC —
APPLICATION SPEC —
WEIGHT —

TE Connectivity

NAME PCJ SPEC ,301

SIZE	CAGE CODE	DRAWING NO	RESTRICTED TO
A3	00779	C-1721081	—

CUSTOMER DRAWING | SCALE 5:1 | SHEET 1 OF 3 | REV D1

1470-19 (3/11)

THIS DRAWING IS UNPUBLISHED. RELEASED FOR PUBLICATION -.- .
© COPYRIGHT - By TE Connectivity ALL RIGHTS RESERVED.

LOC	DIST
HB	—

REVISIONS

P	LTR	DESCRIPTION	DATE	DWN	APVD
	-	SEE SHEET 1	-	—	—

Ⓑ CHANGE CASE,CORE,YOKE : REV_A ==> B

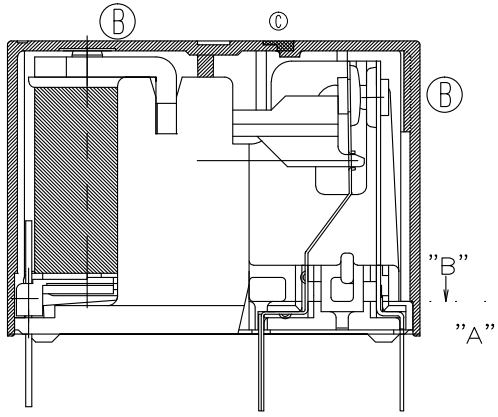

THIS DRAWING IS A CONTROLLED DOCUMENT.

DIMENSIONS: mm

TOLERANCES UNLESS OTHERWISE SPECIFIED:
0 PLC ± -
1 PLC ± -
2 PLC ± -
3 PLC ± -
4 PLC ± -
ANGLES ± -

MATERIAL -

FINISH -

DWN H.SASAKI
CHK Y.OIKAWA
APVD A.NAGAI
PRODUCT SPEC —
APPLICATION SPEC —
WEIGHT —

TE Connectivity

NAME PCJ SPEC ,301

SIZE	CAGE CODE	DRAWING NO	RESTRICTED TO
A3	00779	C-1721081	—

CUSTOMER DRAWING

SCALE 5:1 SHEET 2 OF 3 REV D1

1470-19 (3/11)

THIS DRAWING IS UNPUBLISHED. RELEASED FOR PUBLICATION -.- .
© COPYRIGHT - By TE Connectivity ALL RIGHTS RESERVED.

LOC	DIST
HB	—

REVISIONS

P	LTR	DESCRIPTION	DATE	DWN	APVD
	—	SEE SHEET 1	—	—	—

01

N	PCJ-124D3MH ,301S	2-1721081-8	107-79053 (TUBE)	24V	PCJ-124D3MH
M	PCJ-118D3MH ,301S	2-1721081-7	107-79053 (TUBE)	18V	PCJ-118D3MH
L	PCJ-112D3MH ,301S	2-1721081-6	107-79053 (TUBE)	12V	PCJ-112D3MH
K	PCJ-109D3MH ,301S	2-1721081-5	107-79053 (TUBE)	9V	PCJ-109D3MH
J	PCJ-106D3MH ,301S	2-1721081-4	107-79053 (TUBE)	6V	PCJ-106D3MH
I	PCJ-105D3MH ,301S	2-1721081-3	107-79053 (TUBE)	5V	PCJ-105D3MH
H	PCJ-103D3MH ,301S	2-1721081-2	107-79053 (TUBE)	3V	PCJ-103D3MH
G	PCJ-124D3M ,301S	2-1721081-1	107-79053 (TUBE)	24V	PCJ-124D3M
F	PCJ-118D3M ,301S	2-1721081-0	107-79053 (TUBE)	18V	PCJ-118D3M
E	PCJ-112D3M ,301S	1-1721081-9	107-79053 (TUBE)	12V	PCJ-112D3M
D	PCJ-109D3M ,301S	1-1721081-8	107-79053 (TUBE)	9V	PCJ-109D3M
C	PCJ-106D3M ,301S	1-1721081-7	107-79053 (TUBE)	6V	PCJ-106D3M
B	PCJ-105D3M ,301S	1-1721081-6	107-79053 (TUBE)	5V	PCJ-105D3M
A	PCJ-103D3M ,301S	1-1721081-5	107-79053 (TUBE)	3V	PCJ-103D3M
n	PCJ-124D3MH ,301	1-1721081-4	107-79014 (TRAY)	24V	PCJ-124D3MH
m	PCJ-118D3MH ,301	1-1721081-3	107-79014 (TRAY)	18V	PCJ-118D3MH
l	PCJ-112D3MH ,301	1-1721081-2	107-79014 (TRAY)	12V	PCJ-112D3MH
k	PCJ-109D3MH ,301	1-1721081-1	107-79014 (TRAY)	9V	PCJ-109D3MH
j	PCJ-106D3MH ,301	1-1721081-0	107-79014 (TRAY)	6V	PCJ-106D3MH
i	PCJ-105D3MH ,301	1721081-9	107-79014 (TRAY)	5V	PCJ-105D3MH
h	PCJ-103D3MH ,301	1721081-8	107-79014 (TRAY)	3V	PCJ-103D3MH
g	PCJ-124D3M ,301	1721081-7	107-79014 (TRAY)	24V	PCJ-124D3M
f	PCJ-118D3M ,301	1721081-6	107-79014 (TRAY)	18V	PCJ-118D3M
e	PCJ-112D3M ,301	1721081-5	107-79014 (TRAY)	12V	PCJ-112D3M
d	PCJ-109D3M ,301	1721081-4	107-79014 (TRAY)	9V	PCJ-109D3M
c	PCJ-106D3M ,301	1721081-3	107-79014 (TRAY)	6V	PCJ-106D3M
b	PCJ-105D3M ,301	1721081-2	107-79014 (TRAY)	5V	PCJ-105D3M
a	PCJ-103D3M ,301	1721081-1	107-79014 (TRAY)	3V	PCJ-103D3M
No	DESCRIPTION	TE PART NO	PACKING SPECIFICATION	PART B	PART A

RELAY TYPE

A

nn	PCJ-124D3MH ,301M	4-1721081-2	107-79048 (TUBE)	24V	PCJ-124D3MH
mm	PCJ-118D3MH ,301M	4-1721081-1	107-79048 (TUBE)	18V	PCJ-118D3MH
ll	PCJ-112D3MH ,301M	4-1721081-0	107-79048 (TUBE)	12V	PCJ-112D3MH
kk	PCJ-109D3MH ,301M	3-1721081-9	107-79048 (TUBE)	9V	PCJ-109D3MH
jj	PCJ-106D3MH ,301M	3-1721081-8	107-79048 (TUBE)	6V	PCJ-106D3MH
ii	PCJ-105D3MH ,301M	3-1721081-7	107-79048 (TUBE)	5V	PCJ-105D3MH
hh	PCJ-103D3MH ,301M	3-1721081-6	107-79048 (TUBE)	3V	PCJ-103D3MH
gg	PCJ-124D3M ,301M	3-1721081-5	107-79048 (TUBE)	24V	PCJ-124D3M
ff	PCJ-118D3M ,301M	3-1721081-4	107-79048 (TUBE)	18V	PCJ-118D3M
ee	PCJ-112D3M ,301M	3-1721081-3	107-79048 (TUBE)	12V	PCJ-112D3M
dd	PCJ-109D3M ,301M	3-1721081-2	107-79048 (TUBE)	9V	PCJ-109D3M
cc	PCJ-106D3M ,301M	3-1721081-1	107-79048 (TUBE)	6V	PCJ-106D3M
bb	PCJ-105D3M ,301M	3-1721081-0	107-79048 (TUBE)	5V	PCJ-105D3M
aa	PCJ-103D3M ,301M	2-1721081-9	107-79048 (TUBE)	3V	PCJ-103D3M
No	DESCRIPTION	TE PART NO	PACKING SPECIFICATION	PART B	PART A

A RELAY TYPE

		Sn-Ag-Cu	SOLDER	18
94V-0		PBT	CASE	17
		UV	SEAL(CASE) JUST FOR WASH TIGHT	16
		EPOXY	SEAL(CASE AND BASE)	15
		3UEW	MAGNETIC WIRE	14
94V-0		PBT	CARD	13
		Ag ALLOY	STATIONARY CONTACT	12
	SOLDER DIP	Cu ALLOY	STATIONARY TERMINAL	11
		Ag ALLOY	MOVABLE CONTACT	10
	SOLDER DIP	Cu ALLOY	MOVABLE SPRING	9
94V-0		PBT	BASE	8
		STAINLESS	HINGE SPRING	7
	NIP	STEEL	ARMATURE	6
	NIP	STEEL	CORE	5
	NIP	STEEL	YOKE	4
	SOLDER DIP	Cu ALLOY	COIL TERMINAL B	3
	SOLDER DIP	Cu ALLOY	COIL TERMINAL A	2
94V-0		PBT	BOBBIN	1
INCOMBUSTIBILITY	TREATMENT	MATERIAL	DESCRIPTION	ITEM

THIS DRAWING IS A CONTROLLED DOCUMENT.

DIMENSIONS: mm

TOLERANCES UNLESS OTHERWISE SPECIFIED:
0 PLC ± –
1 PLC ± –
2 PLC ± –
3 PLC ± –
4 PLC ± –
ANGLES ± –

MATERIAL –
FINISH –

DWN H.SASAKI
CHK Y.OIKAWA
APVD A.NAGAI
PRODUCT SPEC —
APPLICATION SPEC —
WEIGHT —

TE Connectivity

NAME PCJ SPEC ,301

SIZE	CAGE CODE	DRAWING NO	RESTRICTED TO
A3	00779	C-1721081	—

CUSTOMER DRAWING | SCALE 5:1 | SHEET 3 OF 3 | REV D1

Общество с ограниченной ответственностью «МосЧип» ИНН 7719860671 / КПП 771901001
Адрес: 105318, г.Москва, ул.Щербаковская д.3, офис 1107

Данный компонент на территории Российской Федерации

Вы можете приобрести в компании MosChip.

Для оперативного оформления запроса Вам необходимо перейти по данной ссылке:

http://moschip.ru/get-element

Вы можете разместить у нас заказ для любого Вашего проекта, будь то серийное производство или разработка единичного прибора.

В нашем ассортименте представлены ведущие мировые производители активных и пассивных электронных компонентов.

Нашей специализацией является поставка электронной компонентной базы двойного назначения, продукции таких производителей как XILINX, Intel (ex.ALTERA), Vicor, Microchip, Texas Instruments, Analog Devices, Mini-Circuits, Amphenol, Glenair.

Сотрудничество с глобальными дистрибьюторами электронных компонентов, предоставляет возможность заказывать и получать с международных складов практически любой перечень компонентов в оптимальные для Вас сроки.

На всех этапах разработки и производства наши партнеры могут получить квалифицированную поддержку опытных инженеров.

Система менеджмента качества компании отвечает требованиям в соответствии с ГОСТ Р ИСО 9001, ГОСТ РВ 0015-002 и ЭС РД 009

Офис по работе с юридическими лицами:

105318, г.Москва, ул.Щербаковская д.3, офис 1107, 1118, ДЦ «Щербаковский»

Телефон: +7 495 668-12-70 (многоканальный)

Факс: +7 495 668-12-70 (доб.304)

E-mail: info@moschip.ru

Skype отдела продаж:
moschip.ru
moschip.ru_4
moschip.ru_6
moschip.ru_9