4N45/4N46

High Gain Darlington Output Optocouplers

AVAGO TECHNOLOGIES

Data Sheet

Lead (Pb) Free
RoHS 6 fully compliant

RoHS 6 fully compliant options available; -xxxE denotes a lead-free product

Description

The 4N45/46 optocouplers contain a GaAsP light emitting diode optically coupled to a high gain photodetector IC.

The excellent performance over temperature results from the inclusion of an integrated emitter-base bypass resistor which shunts photodiode and first stage leakage currents as well as bleeding off excess base drive to ground. External access to the second stage base provides the capability for better noise rejection than a conventional photodarlington detector. An external resistor or capacitor at the base can be added to make a gain-bandwidth or input current threshold adjustment. The base lead can also be used for feedback.

The high current transfer ratio at very low input currents permits circuit designs in which adequate margin can be allowed for the effects of optical coupling variations.

The 4N46 has a 350% minimum CTR at an input current of only 0.5 mA making it ideal for use in low input current applications such as MOS, CMOS and low power logic interfacing. Compatibility with high voltage CMOS logic systems is assured by the 20 V minimum breakdown voltage of the output transistor and by the guaranteed maximum output leakage (I_{OH}) at 18 V.

The 4N45 has a 250% minimum CTR at 1.0 mA input current and a 7 V minimum breakdown voltage rating.

Selection for lower input current down to 250 µA is available upon request.

Features

- **High current transfer ratio – 1500% typical**
- **Low input current requirement – 0.5 mA**
- **Performance guaranteed over 0°C to 70°C temperature range**
- **Internal base-emitter resistor minimizes output leakage**
- **Gain-bandwidth adjustment pin**
- **Safety approval**
  UL Recognized -3750 V rms for 1 minute
  CSA Approved IEC/EN/DIN EN 60747-5-2

Applications

- **Telephone ring detector**
- **Digital logic ground isolation**
- **Low input current line receiver**
- **Line voltage status indicator–low input power dissipation**
- **Logic to read relay interface**
- **Level shifting**
- **Interface between logic families**

Functional Diagram

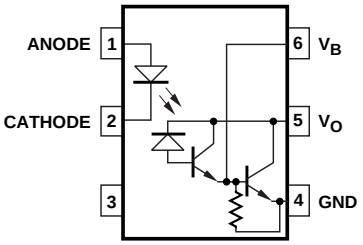

TRUTH TABLE (POSITIVE LOGIC)

LED	OUTPUT
ON	L
OFF	H

* JEDEC Registered Data
** JEDEC Registered up to 70°C.

CAUTION: It is advised that normal static precautions be taken in handling and assembly of this component to prevent damage and/or degradation which may be induced by ESD.

Ordering Information

4N45/4N46 are UL Recognized with 3750 Vrms for 1 minute per UL1577 and is approved under CSA Component Acceptance Notice #5, File CA 88324.

Part Number	Option: RoHS Compliant	Option: non RoHS Compliant	Package	Surface Mount	Gull Wing	Tape & Reel	UL 5000 Vrms / 1 Minute rating	IEC / EN / DIN EN 60747-5-2	Quantity
	-000E	no option	300 mil DIP-6						50 per tube
	-300E	-300	300 mil DIP-6	X	X				50 per tube
4N45	-500E	-500	300 mil DIP-6	X	X	X			1500 per reel
4N46	-060E	-060	300 mil DIP-6				X		50 per tube
	-360E	-360	300 mil DIP-6	X	X		X		50 per tube
	-560E	-560	300 mil DIP-6	X	X	X	X		1500 per reel

To order, choose a part number from the part number column and combine with the desired option from the option column to form an order entry.

Example 1:
4N45-560E to order product of 300 mil DIP Gull Wing Surface Mount package in Tape and Reel packaging with IEC/EN/DIN EN 60747-5-2 Safety Approval and RoHS compliant.

Example 2:
4N45 to order product of 300 mil DIP package in Tube packaging and non RoHS compliant.

Option datasheets are available. Contact your Avago sales representative or authorized distributor for information.

Remarks: The notation '#XXX' is used for existing products, while (new) products launched since July 15, 2001 and RoHS compliant will use '–XXXE.'

Schematic

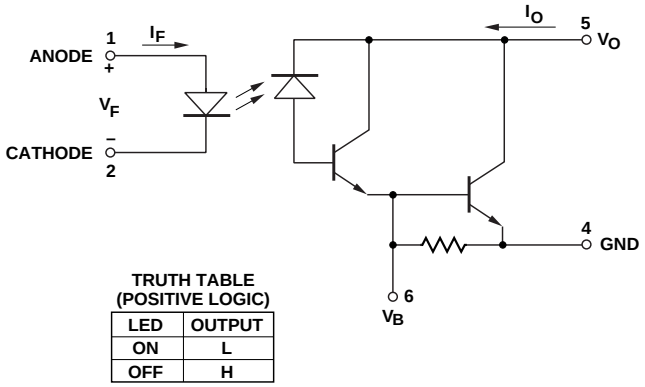

TRUTH TABLE
(POSITIVE LOGIC)

LED	OUTPUT
ON	L
OFF	H

Outline Drawing

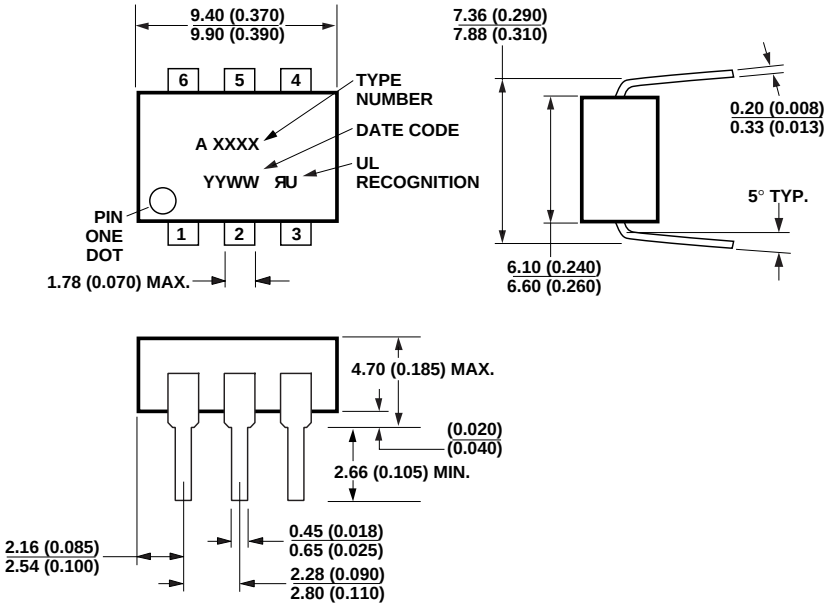

DIMENSIONS IN MILLIMETERS AND (INCHES).

Outline Drawing – Option 300

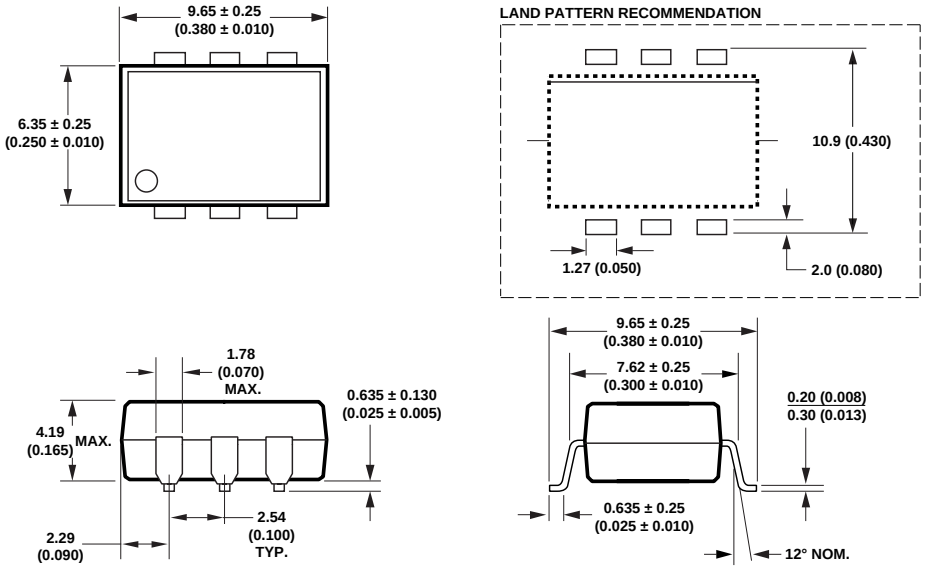

NOTE: FLOATING LEAD PROTRUSION IS 0.25 mm (10 mils) MAX.

Solder Reflow Thermal Profile

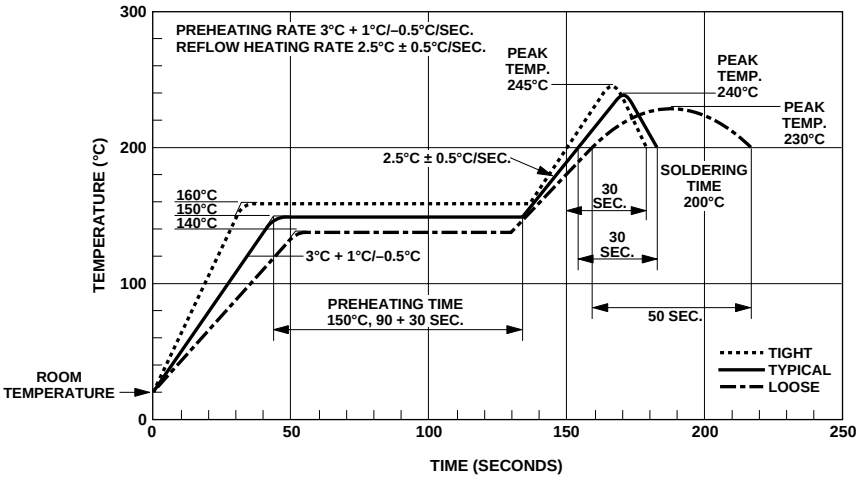

Note: Non-halide flux should be used.

Recommended Pb-Free IR Profile

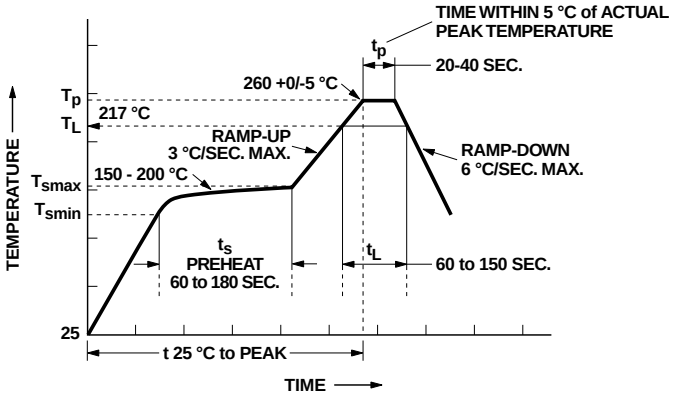

NOTES:
THE TIME FROM 25 °C to PEAK TEMPERATURE = 8 MINUTES MAX.
T_{smax} = 200 °C, T_{smin} = 150 °C

Note: Non-halide flux should be used.

Regulatory Information

The 4N45 and 4N46 have been approved by the following regulatory organizations:

UL

Recognized under UL 1577, Component Recognition Program, File E55361.

IEC / EN / DIN EN 60747-5-2

Approved under:
IEC 60747-5-2:1997 + A1:2002
EN 60747-5-2:2001 + A1:2002
DIN EN 60747-5-2 (VDE 0884 Teil 2):2003-01.
(Option 060 only)

CSA

Approved under CSA Component Acceptance Notice #5, File CA 88324.

Insulation and Safety Related Specifications

Parameter	Symbol	Value	Units	Conditions
Min. External Air Gap (External Clearance)	L(IO1)	7.1	mm	Measured from input terminals to output terminals, shortest distance through air
Min. External Tracking Path (External Creepage)	L(IO2)	7.4	mm	Measured from input terminals to output terminals, shortest distance path along body
Min. Internal Plastic Gap (Internal Clearance)		0.08	mm	Through insulation distance, conductor to conductor, usually the direct distance between the photoemitter and photodetector inside the optocoupler cavity
Tracking Resistance (Comparative Tracking Index)	CTI	200	Volts	DIN IEC 112 / VDE 0303 PART 1
Isolation Group		IIIa		Material Group (DIN VDE 0110, 1 / 89, Table 1)

Option 300 – surface mount classification is Class A in accordance with CECC 00802.

IEC/EN/DIN EN 60747-5-2 Insulation Related Characteristics

Description	Symbol	PDIP Option 060	Units
Installation classification per DIN VDE 0110/1.89, Table 1 for rated mains voltage ≤150 V rms for rated mains voltage ≤300 V rms for rated mains voltage ≤600 V rms		 I-IV I-III	
Climatic Classification		55/85/21	
Pollution Degree (DIN VDE 0110/1.89)		2	
Maximum Working Insulation Voltage	V_{IORM}	630	V peak
Input to Output Test Voltage, Method b* V_{IORM} x 1.875 = V_{PR}, 100% Production Test with t_m = 1 sec, Partial Discharge < 5 pC	V_{PR}	1181	V peak
Input to Output Test Voltage, Method a* V_{IORM} x 1.5 = V_{PR}, Type and Sample Test, t_m = 60 sec, Partial Discharge < 5 pC	V_{PR}	945	V peak
Highest Allowable Overvoltage* (Transient Overvoltage, t_{ini} = 10 sec)	V_{IOTM}	6000	V peak
Safety Limiting Values (See below for Thermal Derating Curve Figures) Case Temperature Input Current Output Power	 T_S $I_{S,INPUT}$ $P_{S,OUTPUT}$	 175 230 600	 °C mA mW
Insulation Resistance at T_S, V_{IO} = 500 V	R_S	$\geq 10^9$	Ω

*Refer to the front of the optocoupler section of the current catalog, under Product Safety Regulations section IEC/EN/DIN/ EN 60747-5-2, for a detailed description.

Note: Isolation characteristics are guaranteed only within the safety maximum ratings which must be ensured by protective circuits in application.

Absolute Maximum Ratings

Storage Temperature, T_S ..... -55° C to +125° C
Operating Temperature, T_A ..... -40° C to +85° C
Lead Solder Temperature, max ..... 260° C for 10 s
(1.6 mm below seating plane)
Average Input Current, I_F ..... 20 mA[1]
Peak Input Current, I_F ..... 40 mA
(50% duty cycle, 1 ms pulse width)
Peak Transient Input Current, I_F ..... 1.0 A
(≤1 µs pulse width, 300 pps)
Reverse Input Voltage, V_R ..... 5 V
Input Power Dissipation, P_I ..... 35 mW[2]
Output Current, I_O (Pin 5) ..... 60 mA[3]
Emitter-Base Reverse Voltage (Pins 4-6) ..... 0.5 V
Output Voltage, V_O (Pin 5-4)
4N45 ..... -0.5 to 7 V
4N46 ..... -0.5 to 20 V
Output Power Dissipation ..... 100 mW[4]
Infrared and Vapor Phase Reflow Temperature
(Option #300) ..... see Fig. 1, Thermal Profile

Recommended Operating Conditions

Parameter	Symbol	Min.	Max.	Units
Output Voltage (4N46)	V_O	4.5	20	V
Output Voltage (4N45)		4.5	7	V
Input Current (High)	$I_{F(ON)}$	0.5	10	mA
Input Voltage (Low)	$V_{F(OFF)}$	0	0.8	V
Operating Temperature	T_A	0	70	°C

DC Electrical Specifications

Over recommended temperature (T_A = 0°C to 70°C), unless otherwise specified.

Parameter	Device	Symbol	Min.	Typ.*	Max.	Units	Test Conditions	Fig.	Note
Current Transfer Ratio	4N46	CTR	350* 500* 200*	1500 1500 600	3200 2000 1000	%	I_F = 0.5 mA, V_O = 1.0 V I_F = 1.0 mA, V_O = 1.0 V I_F = 10 mA, V_O = 1.2 V	3, 4, 5, 11, 12	5, 6, 8
	4N45		250* 200*	1200 500	2000 1000	%	I_F = 1.0 mA, V_O = 1.0 V I_F = 10 mA, V_O = 1.2 V		
Logic Low Output Voltage	4N46	V_{OL}		0.90 0.92 0.95	1.0 1.0 1.2	V	I_F = 0.5 mA, I_{OL} = 1.75 mA I_F = 1.0 mA, I_{OL} = 5.0 mA I_F = 10 mA, I_{OL} = 20 mA	3	6
	4N45			0.90 0.95	1.0 1.2	V	I_F = 1.0 mA, I_{OL} = 2.5 mA I_F = 10 mA, I_{OL} = 20 mA		
Logic High Output Current	4N46	I_{OH}*		0.001	100	µA	I_F = 0 mA, V_O = 18 V		6
	4N45			0.001	250	µA	I_F = 0 mA, V_O = 5 V		
Input Forward Voltage		V_F		1.4	1.7* 1.75	V	T_A = 25°C, I_F = 1.0 mA	2	
Temperature Coefficient of Forward Voltage		$\frac{\Delta V_F}{\Delta T_A}$		-1.8		mV/°C	I_F = 1.0 mA		
Input Reverse Breakdown Voltage		BV_R*	5			V	I_R = 10 µA		
Input Capacitance		C_{IN}		60		pF	f = 1 MHz, V_F = 0		

Switching Specifications

(Over recommended temperature T_A = 0°C to 70°C unless otherwise specified. V_{CC} = 5.0 V.

Parameter	Symbol	Min.	Typ.*	Max.	Units	Test Conditions	Fig.	Note
Propagation Delay Time to Logic Low at Output	t_{PHL}		80		µs	T_A = 25°C, I_F = 0.5 mA, R_L = 10 kΩ	6, 7, 8, 9, 11, 13	6, 8
	t_{PHL}		5	50* 60		T_A = 25°C, I_F = 10 mA, R_L = 2.2 kΩ		
Propagation Delay Time to Logic High at Output	t_{PLH}		1500		µs	T_A = 25°C, I_F = 10 mA, R_L = 10 kΩ	6, 7, 8, 9, 11, 13	6, 8
	t_{PLH}		150	500* 600		T_A = 25°C, I_F = 10 mA, R_L = 220 kΩ		
Common Mode Transient Immunity at High Output Level	$\|CM_H\|$		500		V/µs	I_F = 0 mA, R_L = 10 kΩ, $\|V_{CM}\|$ = 10 V_{P-P}	10	9
Common Mode Transient Immunity at Low Output Level	$\|CM_L\|$		500		V/µs	I_F = 1.0 mA, R_L = 10 kΩ, $\|V_{CM}\|$ = 10 V_{P-P}	10	9

*JEDEC Registered Data.
**All typicals at T_A = 25°C, unless otherwise noted.

Package Characteristics

For 0°C ≤ T_A ≤ 70°C, unless otherwise specified. All typicals at T_A = 25°C.

Parameter	Symbol	Min.	Typ.	Max.	Units	Test Conditions	Fig.	Notes
Input-Output Momentary Withstand Voltage*	V_{ISO}	3750			V rms	RH ≤ 50%, t = 1 min, T_A = 25°C		7, 10
Resistance, Input-Output	R_{I-O}		10^{12}		Ω	V_{I-O} = 500 Vdc		7
Capacitance, Input-Output	C_{I-O}		0.6		pF	f = 1 MHz		7

*The Input-Output Momentary Withstand Voltage is a dielectric voltage rating that should not be interpreted as an input-output continuous voltage rating. For the continuous voltage rating refer to the VDE 0884 Insulation Characteristics Table (if applicable), your equipment level safety specification, or Avago Application Note 1074, "Optocoupler Input-Output Endurance Voltage."

Notes:

1. Derate linearly above 50°C free-air temperature at a rate of 0.4 mA/°C.
2. Derate linearly above 50°C free-air temperature at a rate of 0.7 mW/°C.
3. Derate linearly above 25°C free-air temperature at a rate of 0.8 mA/°C.
4. Derate linearly above 25°C free-air temperature at a rate of 1.5 mW/°C.
5. DC CURRENT TRANSFER RATIO is defined as the ratio of output collector current, I_O, to the forward LED input current, I_F, times 100%.
6. Pin 6 Open.
7. Device considered a two-terminal device: Pins 1, 2, 3 shorted together and Pins 4, 5, and 6 shorted together.
8. Use of a resistor between pin 4 and 6 will decrease gain and delay time. (See Figures 11, 12, and 13.)
9. Common mode transient immunity in Logic High level is the maximum tolerable (positive) dV_{cm}/dt on the leading edge of the common mode pulse, V_{CM}, to assure that the output will remain in a Logic High state (i.e., V_O > 2.5 V). Common mode transient immunity in Logic Low level is the maximum tolerable (negative) dV_{cm}/dt on the trailing edge of the common mode pulse signal, V_{cm}, to assure that the output will remain in a Logic Low state (i.e., V_O < 2.5 V).
10. In accordance with UL 1577, each optocoupler is proof tested by applying an insulation test voltage ≥ 4500 V rms for 1 second (leakage detection current limit, I_{I-O} ≤ 5 µA).

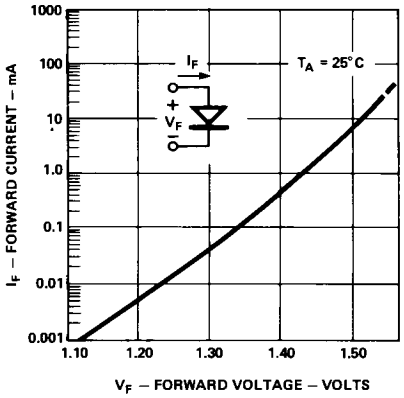

Figure 2. Input diode forward current vs. forward voltage.

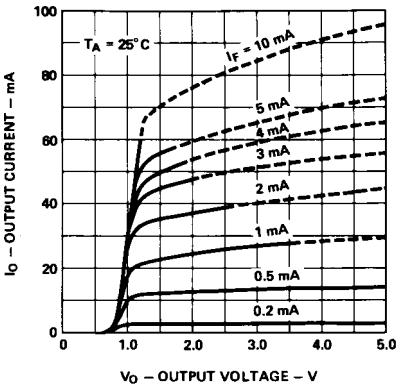

Figure 3. Typical DC transfer characteristics.

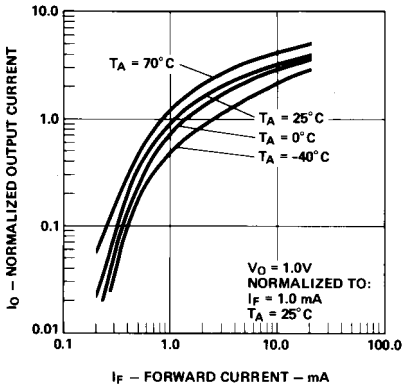

Figure 4. Output current vs. input current.

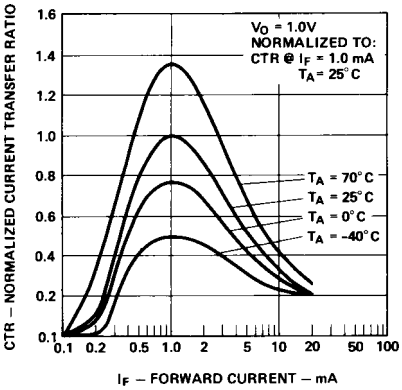

Figure 5. Current transfer ratio vs. input current.

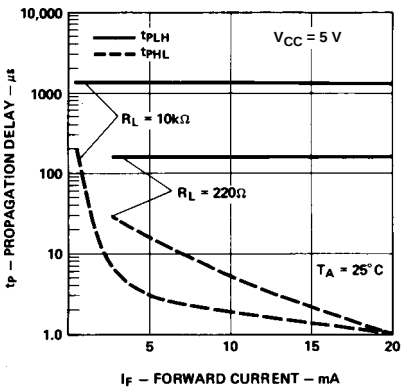

Figure 6. Propagation delay vs. forward current.

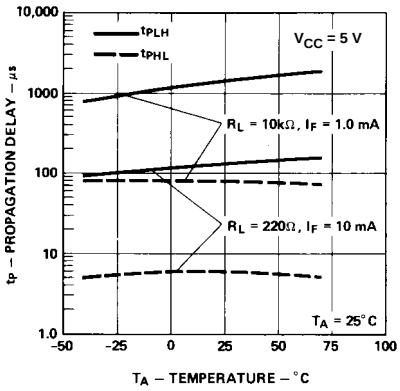

Figure 7. Propagation delay vs. temperature.

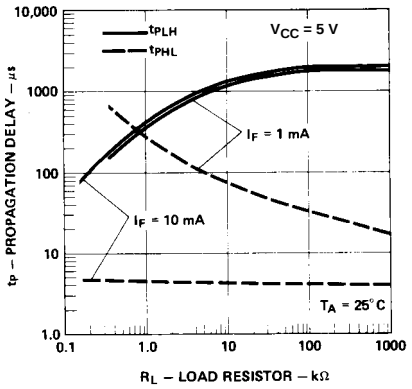

Figure 8. Propagation delay vs. load resistor.

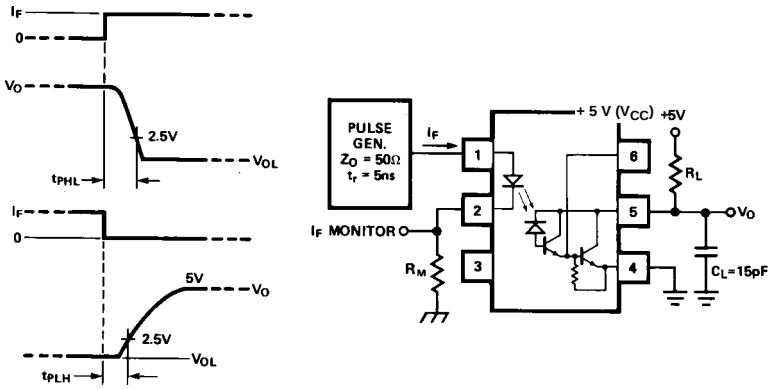

Figure 9. Switching test circuit.

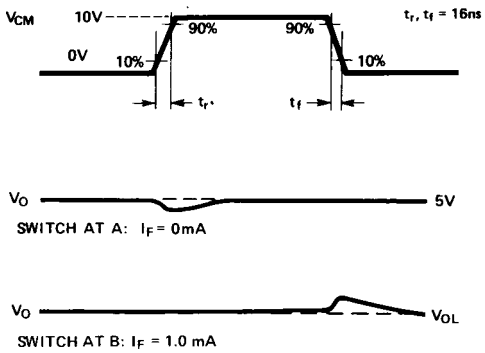

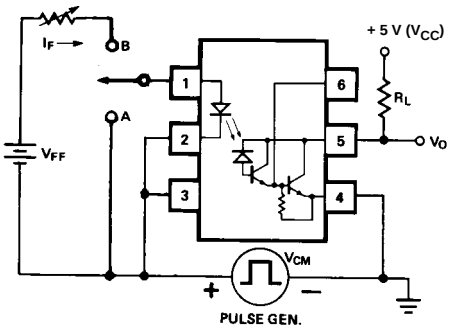

Figure 10. Test circuit for transient immunity and typical waveforms.

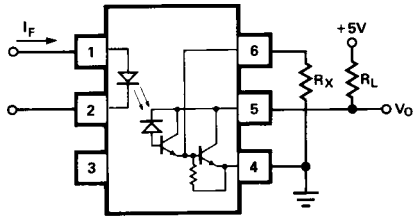

Figure 11. External base resistor, R_X.

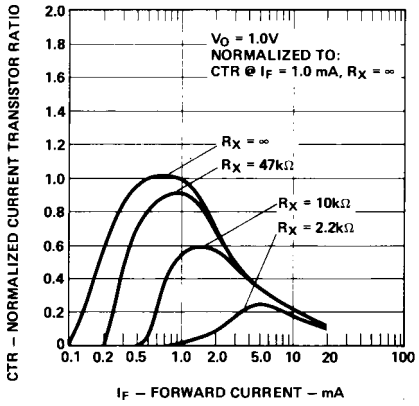

Figure 12. Effect of R_X on current transfer ratio.

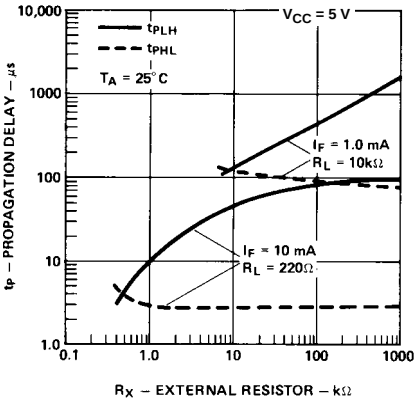

Figure 13. Effect of R_X on propagation delay.

Applications

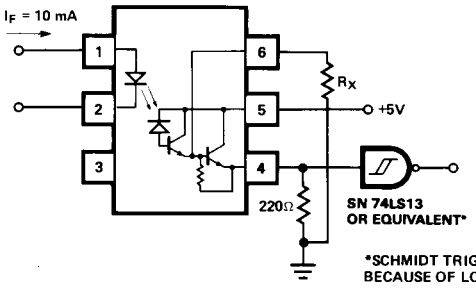

R_X (kΩ)	t_{PHL} (μs)	t_{PLH} (μs)
∞	5	320
100	5	200
47	5	140
20	6	80
10	6	45

TTL Interface

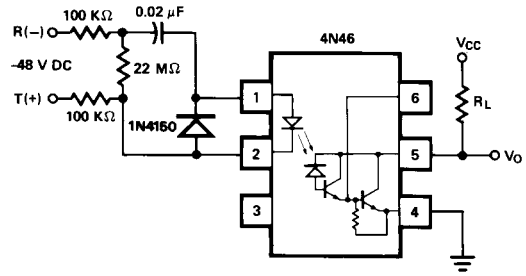

NOTE: AN INTEGRATOR MAY BE REQUIRED AT THE OUTPUT TO ELIMINATE DIALING PULSES AND LINE TRANSIENTS.

Telephone Ring Detector

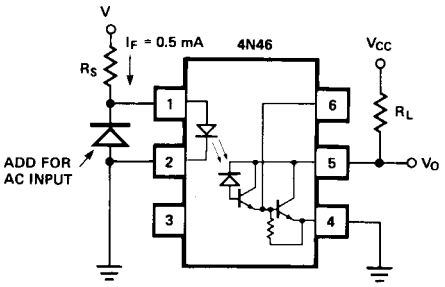

V (Vdc or Vrms)	R_S	V • I_F (mW)
24	47kΩ	11
48	100kΩ	22
115	220kΩ	62
230	470kΩ	113

Line Voltage Monitor

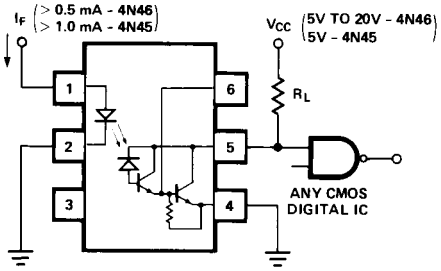

CMOS Interface

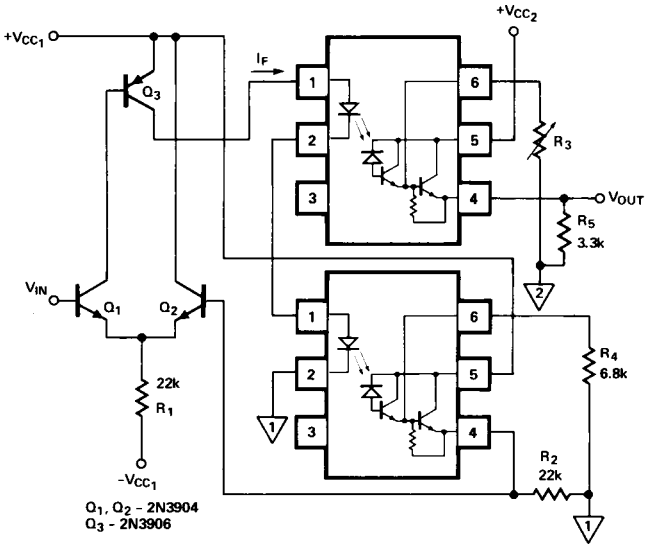

CHARACTERISTICS

$R_{IN} \approx 30M\Omega$, $R_{OUT} \approx 50\Omega$
$V_{IN\,(MAX.)} = V_{CC_1} - 1V$, LINEARITY BETTER THAN 5%

DESIGN COMMENTS

R_1 - NOT CRITICAL $\left(\ll \frac{V_{IN\,(MAX.)} - (-V_{CC_1}) - V_{BE}}{I_{F\,(MAX.)}}\right) h_{FE}\ Q_3$

R_2 - NOT CRITICAL (OMIT IF 0.2 TO 0.3V OFFSET IS TOLERABLE)

$R_4 > \frac{V_{IN\,(MAX.)} + V_{BE}}{1\ mA}$

$R_5 > \frac{V_{IN\,(MAX.)}}{2.5\ mA}$

NOTE: ADJUST R_3 SO $V_{OUT} = V_{IN}$ AT $V_{IN} = \frac{V_{IN\,(MAX.)}}{2}$

Analog Signal Isolation

For product information and a complete list of distributors, please go to our website: **www.avagotech.com**

Avago, Avago Technologies, and the A logo are trademarks of Avago Technologies Limited in the United States and other countries.
Data subject to change. Copyright © 2007 Avago Technologies Limited. All rights reserved. Obsoletes 5989-2104EN
AV01-0545EN June 25, 2007

Общество с ограниченной ответственностью «МосЧип» ИНН 7719860671 / КПП 771901001
Адрес: 105318, г.Москва, ул.Щербаковская д.3, офис 1107

Данный компонент на территории Российской Федерации

Вы можете приобрести в компании MosChip.

Для оперативного оформления запроса Вам необходимо перейти по данной ссылке:

http://moschip.ru/get-element

Вы можете разместить у нас заказ для любого Вашего проекта, будь то серийное производство или разработка единичного прибора.

В нашем ассортименте представлены ведущие мировые производители активных и пассивных электронных компонентов.

Нашей специализацией является поставка электронной компонентной базы двойного назначения, продукции таких производителей как XILINX, Intel (ex.ALTERA), Vicor, Microchip, Texas Instruments, Analog Devices, Mini-Circuits, Amphenol, Glenair.

Сотрудничество с глобальными дистрибьюторами электронных компонентов, предоставляет возможность заказывать и получать с международных складов практически любой перечень компонентов в оптимальные для Вас сроки.

На всех этапах разработки и производства наши партнеры могут получить квалифицированную поддержку опытных инженеров.

Система менеджмента качества компании отвечает требованиям в соответствии с ГОСТ Р ИСО 9001, ГОСТ РВ 0015-002 и ЭС РД 009

Офис по работе с юридическими лицами:

105318, г.Москва, ул.Щербаковская д.3, офис 1107, 1118, ДЦ «Щербаковский»

Телефон: +7 495 668-12-70 (многоканальный)

Факс: +7 495 668-12-70 (доб.304)

E-mail: info@moschip.ru

Skype отдела продаж:
moschip.ru
moschip.ru_4
moschip.ru_6
moschip.ru_9