Dual-Loop 50 Mbps–2.7 Gbps Laser Diode Driver

ADN2841

FEATURES

50 Mbps to 2.7 Gbps Operation
Typical Rise/Fall Time 80 ps
Bias Current Range 2 to 100 mA
Modulation Current Range 5 to 80 mA
Monitor Photodiode Current 50 μA to 1200 μA
Closed-Loop Control of Power and Extinction Ratio
Laser Fail and Laser Degrade Alarms
Automatic Laser Shutdown, ALS
Dual MPD Functionality for DWDM
Optional Clocked Data
Full Current Parameter Monitoring
5 V Operation
48-Lead LFCSP Package
32-Lead LFCSP Package (Reduced Functionality)

APPLICATIONS

DWDM Dual MPD Wavelength Fixing
SONET OC-1/3/12/48
SDH STM-1/4/16
Fibre Channel
Gigabit Ethernet

GENERAL DESCRIPTION

The ADN2841 uses a unique control algorithm to control both the average power and extinction ratio of the laser diode (LD) after initial factory setup. External component count and PCB area are low, since both power and extinction ratio control are fully integrated. Programmable alarms are provided for laser fail (end of life) and laser degrade (impending fail).

The ADN2841 has circuitry for a second monitor photodiode, which enables DWDM wavelength control.

FUNCTIONAL BLOCK DIAGRAM

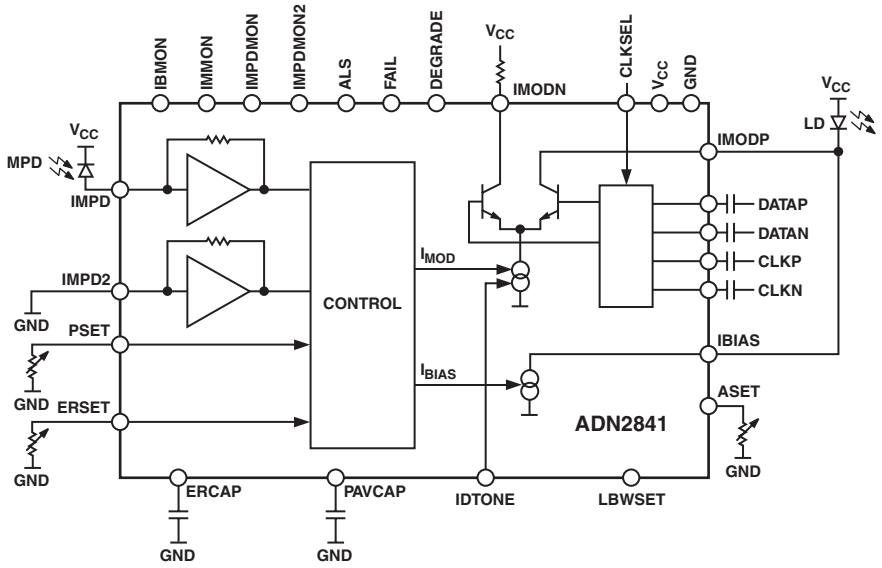

REV. A

Information furnished by Analog Devices is believed to be accurate and reliable. However, no responsibility is assumed by Analog Devices for its use, nor for any infringements of patents or other rights of third parties that may result from its use. No license is granted by implication or otherwise under any patent or patent rights of Analog Devices.

One Technology Way, P.O. Box 9106, Norwood, MA 02062-9106, U.S.A.
Tel: 781/329-4700 **www.analog.com**
Fax: 781/326-8703
© Analog Devices, Inc., 2002

ADN2841–SPECIFICATIONS

(V_{CC} = 5 V ±10%. All specifications T_{MIN} to T_{MAX}, unless otherwise noted[1]. Typical values as specified at 25°C.)

Parameter	Min	Typ	Max	Unit	Conditions/Comments
LASER BIAS (BIAS)					
Output Current I_{BIAS}	2		100	mA	
Compliance Voltage	1.2		V_{CC}	V	
I_{BIAS} during ALS			0.1	mA	
ALS Response Time		10		µs	
CCBIAS Compliance Voltage		1.2		V	
MODULATION CURRENT (IMODP, IMODN)					
Output Current I_{MOD}	5		80	mA	
Compliance Voltage	1.8		V_{CC}	V	
I_{MOD} during ALS			0.1	mA	
Rise Time		80	120	ps	
Fall Time		80	120	ps	
Jitter			20	ps p-p	
Pulsewidth Distortion		18		ps	
MONITOR PD (MPD, MPD2)					
Current	50		1200	µA	Average Current
Input Voltage			1.6	V	
POWER SET INPUT (PSET)					
Capacitance			80	pF	
Input Current	50		1200	µA	Average Current
Voltage	1.15	1.23	1.35	V	
EXTINCTION RATIO SET INPUT (ERSET)					
Allowable Resistance Range	1.2		25	kΩ	
Voltage	1.15	1.23	1.35	V	
ALARM SET (ASET)					
Allowable Resistance Range	1.2		25	kΩ	
Voltage	1.15	1.23	1.35	V	
Hysteresis		5		%	
CONTROL LOOP					
Time Constant		0.22		sec	(LBWSET = GND)
		2.25		sec	(LBWSET = V_{CC})
DATA INPUTS (DATAP, DATAN, CLKP, CLKN)					
AC-Coupled[2]					
V p-p (Single-Ended Peak-to-Peak)	100		500	mV	
Input Impedance		50		Ω	
t_{SETUP}[3]	150	95		ps	
t_{HOLD}[3]	0	–70		ps	
LOGIC INPUTS (ALS, LBWSET, CLKSEL)					
V_{IH}	2.4			V	
V_{IL}			0.8	V	
ALARM OUTPUTS (Internal 30 kΩ Pull-Up)					
V_{OH}	2.4			V	
V_{OL}			0.8	V	
IDTONE					
Compliance Voltage			V_{CC} – 1.5	V	User to Supply Current Sink in the Range 50 µA to 4 mA
$\left(\frac{I_{OUT}}{I_{IN}}\right) RATIO$		2			
f_{IN}[4]	0.01		1	MHz	

Parameter	Min	Typ	Max	Unit	Conditions/Comments
IBMON, IMMON, IMPDMON, IMPDMON2					
IBMON, IMMON Division Ratio		100		A/A	
IMPDMON, IMPDMON2		1		A/A	
IMPDMON to IMPDMON2 Matching			1	%	IMPD = 1200 μA
Compliance Voltage	0		V_{CC} – 1.2	V	
SUPPLY					
I_{CC}[5]		0.05		A	$I_{BIAS} = I_{MOD} = 0$
V_{CC}[6]	4.5	5.0	5.5	V	

NOTES
[1]Temperature range: –40°C to +85°C.
[2]When the voltage on DATAP is greater than the voltage on DATAN, the modulation current flows in the IMODP pin.
[3]Guaranteed by design and characterization. Not production tested.
[4]IDTONE may cause eye distortion.
[5]I_{CC} for power calculation is the typical I_{CC} given.
[6]All V_{CCS} should be shorted together.

Specifications subject to change without notice.

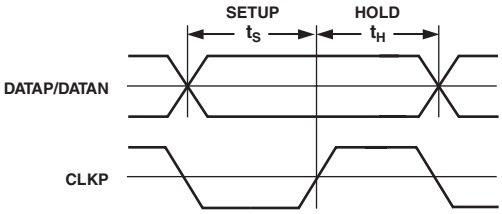

Figure 1. Setup and Hold Time

ABSOLUTE MAXIMUM RATINGS[1]
(T_A = 25°C, unless otherwise noted.)

V_{CC} to GND . . . . . 7 V
Operating Temperature Range
Industrial . . . . . –40°C to +85°C
Storage Temperature Range . . . . . –65°C to +150°C
Junction Temperature ($T_{J\ MAX}$) . . . . . 150°C
48-Lead LFCSP Package
Power Dissipation . . . . . ($T_{J\ MAX} – T_A$)/θ_{JA} mW
θ_{JA} Thermal Impedance[2] . . . . . 25°C/W
Lead Temperature (Soldering for 10 sec) . . . . . 300°C
32-Lead LFCSP Package
Power Dissipation . . . . . ($T_{J\ MAX} – T_A$)/θ_{JA} mW
θ_{JA} Thermal Impedance[2] . . . . . 32°C/W
Lead Temperature (Soldering for 10 sec) . . . . . 300°C

NOTES
[1]Stresses above those listed under Absolute Maximum Ratings may cause permanent damage to the device. This is a stress rating only; functional operation of the device at these or any other conditions above those listed in the operational sections of this specification is not implied. Exposure to absolute maximum rating conditions for extended periods may affect device reliability. Transient currents of up to 100 mA will not cause SCR latch-up.
[2]θ_{JA} is defined when the part is soldered onto a four-layer board.

ORDERING GUIDE

Model	Temperature Range	Package Description
ADN2841ACP-32	–40°C to +85°C	32-Lead LFCSP
ADN2841ACP-48	–40°C to +85°C	48-Lead LFCSP
ADN2841ACP-32-RL	–40°C to +85°C	32-Lead LFCSP
ADN2841ACP-32-RL7	–40°C to +85°C	32-Lead LFCSP
ADN2841ACP-48-RL	–40°C to +85°C	48-Lead LFCSP

CAUTION

ESD (electrostatic discharge) sensitive device. Electrostatic charges as high as 4000 V readily accumulate on the human body and test equipment and can discharge without detection. Although the ADN2841 features proprietary ESD protection circuitry, permanent damage may occur on devices subjected to high energy electrostatic discharges. Therefore, proper ESD precautions are recommended to avoid performance degradation or loss of functionality.

PIN CONFIGURATIONS

48-Lead LFCSP

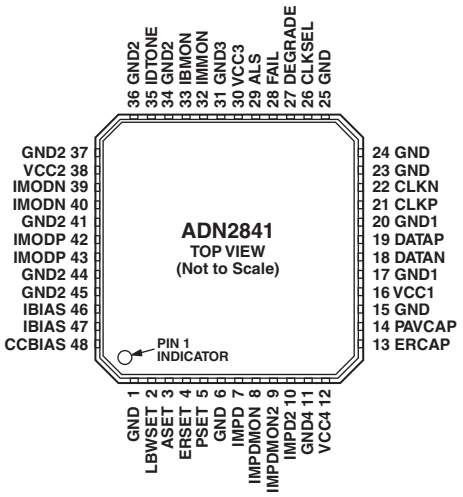

32-Lead LFCSP

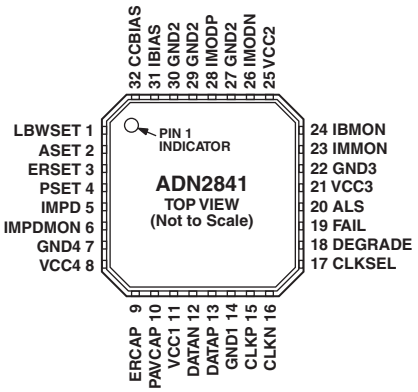

PIN FUNCTION DESCRIPTIONS

Pin No. 48-Lead	Pin No. 32-Lead	Mnemonic	Function
1		GND	Supply Ground
2	1	LBWSET	Select Low Loop Bandwidth (Active = V_{CC})
3	2	ASET	Alarm Current Threshold Setting Pin
4	3	ERSET	Extinction Ratio Set Pin
5	4	PSET	Average Optical Power Set Pin
6		GND	Ground
7	5	IMPD	Monitor Photodiode Input
8	6	IMPDMON	Mirrored Current from Monitor Photodiode
9		IMPDMON2	Mirrored Current from Monitor Photodiode 2 (for Use with Two MPDs)
10		IMPD2	Monitor Photodiode Input 2–(for Use with Two MPDs)
11	7	GND4	Supply Ground
12	8	VCC4	Supply Voltage
13	9	ERCAP	Extinction Ratio Loop Capacitor
14	10	PAVCAP	Average Power Loop Capacitor
15		GND	Ground
16	11	VCC1	Supply Voltage
17		GND1	Supply Ground
18	12	DATAN	Data, Negative Differential Terminal
19	13	DATAP	Data, Positive Differential Terminal
20	14	GND1	Supply Ground
21	15	CLKP	Data Clock Positive Differential Terminal, used if CLKSEL = V_{CC}
22	16	CLKN	Data Clock Negative Differential Terminal, used if CLKSEL = V_{CC}
23		GND	Ground
24		GND	Ground
25		GND	Ground
26	17	CLKSEL	Clock Select (Active = V_{CC}), used if data is clocked into chip
27	18	DEGRADE	DEGRADE Alarm Output
28	19	FAIL	FAIL Alarm Output
29	20	ALS	Automatic Laser Shutdown
30	21	VCC3	Supply Voltage
31	22	GND3	Supply Ground
32	23	IMMON	Modulation Current Mirror Output
33	24	IBMON	Bias Current Mirror Output
34		GND2	Supply Ground
35		IDTONE	IDTONE (Requires External Current Sink to Ground)
36		GND2	Supply Ground

PIN FUNCTION DESCRIPTIONS (continued)

Pin No.			
48-Lead	**32-Lead**	**Mnemonic**	**Function**
37		GND2	Supply Ground
38	25	VCC2	Supply Voltage
39	26	IMODN	Modulation Current Negative Output. Connect to 25 Ω.
40		IMODN	Modulation Current Negative Output. Connect to 25 Ω.
41	27	GND2	Supply Ground
42	28	IMODP	Modulation Current Positive Output. Connect to laser diode.
43		IMODP	Modulation Current Positive Output. Connect to laser diode.
44	29	GND2	Supply Ground
45	30	GND2	Supply Ground
46	31	IBIAS	Laser Diode Bias Current
47		IBIAS	Laser Diode Bias Current
48	32	CCBIAS	Extra Laser Diode Bias when AC-Coupled

GENERAL

Laser diodes have current-in to light-out transfer functions as shown in Figure 2. Two key characteristics of this transfer function are the threshold current, I_{TH}, and the slope in the linear region beyond the threshold current, referred to as slope efficiency, LI.

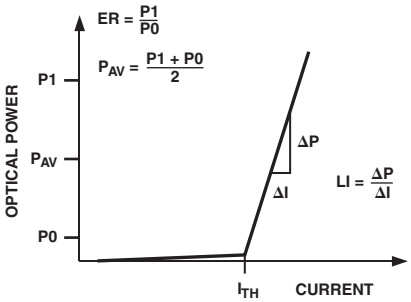

Figure 2. Laser Transfer Function

CONTROL

A monitor photodiode (MPD) is required to control the LD. The MPD current is fed into the ADN2841 to control the optical power and extinction ratio, continuously adjusting the bias current and modulation current in response to the laser's changing threshold current and light-to-current (LI) slope (slope efficiency).

The ADN2841 uses automatic power control (APC) to maintain a constant power over time and temperature.

The ADN2841 uses closed-loop extinction ratio control to allow optimum setting of extinction ratio for every device. Therefore, SONET/SDH interface standards can be met over device variation, temperature, and time. Closed-loop modulation control eliminates the need to either overmodulate the LD or include external components for temperature compensation. This reduces research and development time and second-sourcing issues caused by characterizing LDs.

Average power and extinction ratio are set using the PSET and ERSET pins, respectively. Potentiometers are connected between these pins and ground. The potentiometer R_{PSET} is used to change the average power. The potentiometer R_{ERSET} is used to adjust the extinction ratio. Both PSET and ERSET are kept 1.23 V above GND.

R_{PSET} and R_{ERSET} can be calculated using the following formulas:

$$R_{PSET} = \frac{1.23\,V}{I_{AV}}$$

where I_{AV} is the average MPD current.

$$R_{ERSET} = \frac{1.23\,V}{\frac{I_{MPD_CW}}{P_{CW}} \times \frac{ER-1}{ER+1} \times 0.2 \times P_{AV}}$$

where P_{CW} is the dc optical power specified on the laser data sheet, I_{MPD_CW} is the MPD current at that specified P_{CW}, and P_{AV} is the required average power.

Note that I_{ERSET} and I_{PSET} will change from device to device. However, the control loops will determine actual values. It is not required to know the exact values for LI or MPD optical coupling.

LOOP BANDWIDTH SELECTION

For anyrate operation, the user should hardwire the LBWSET pin high and use 1 µF capacitors to set the actual loop bandwidth. These capacitors are placed between the PAVCAP and ERCAP pins and ground. It is important that these capacitors be low leakage multilayer ceramics with an insulation resistance greater than 100 GΩ or a time constant of 1000 sec, whichever is less. The ADN2841 may be optimized for 2.7 Gbps operation by keeping the LBWSET pin low. This results in a much shorter loop time constant (a 10× reduction). The value of PAVCAP and ERCAP capacitors required for 2.5 Gbps operation is 22 nF.

ALARMS

The ADN2841 alarms are designed to allow interface compliance to ITU-T-G958 (11/94) section 10.3.1.1.2 (transmitter fail) and section 10.3.1.1.3 (transmitter degrade). The ADN2841 has two active high alarms, DEGRADE and FAIL. A resistor between ground and the ASET pin is used to set the current at which these alarms are raised. The current through the ASET resistor is a ratio of 100:1 to the FAIL alarm threshold. The DEGRADE alarm will be raised at 90% of this level.

Example:

$$I_{FAIL} = 50\ mA \therefore I_{DEGRADE} = 45\ mA$$

$$I_{ASET} = \frac{I_{BIASTRIP}}{100} = \frac{50\ mA}{100} = 500\ \mu A$$

$$R_{ASET} = \frac{1.23\,V}{I_{ASET}} = \frac{1.23\,V}{500\ \mu A} = 2.46\ k\Omega$$

NOTE: The smallest value for R_{ASET} is 1.2 kΩ, as this corresponds to the I_{BIAS} maximum of 100 mA.

The laser degrade alarm, DEGRADE, gives a warning of imminent laser failure if the laser diode degrades further or environmental conditions, e.g., increasing temperature, continue to stress the LD.

The laser fail alarm, FAIL, is activated when the transmitter can no longer be guaranteed to be SONET/SDH compliant. This occurs when one of the following conditions arises:

- The ASET threshold is reached.
- The ALS pin is set high. This shuts off the modulation and bias currents to the LD, resulting in the MPD current dropping to zero. This gives closed-loop feedback to the system in which ALS has been enabled.

DEGRADE will only be raised when the bias current exceeds 90% of ASET current.

MONITOR CURRENTS

IBMON, IMMON, IMPDMON, and IMPDMON2 are current controlled current sources from V_{CC}. They mirror the bias, modulation, and MPD current for increased monitoring functionality. An external resistor to GND gives a voltage proportional to the current monitored.

DUAL MPD DWDM FUNCTION (48-LEAD LFCSP ONLY)

The ADN2841 has circuitry for an optional second monitor photodiode, MPD2.

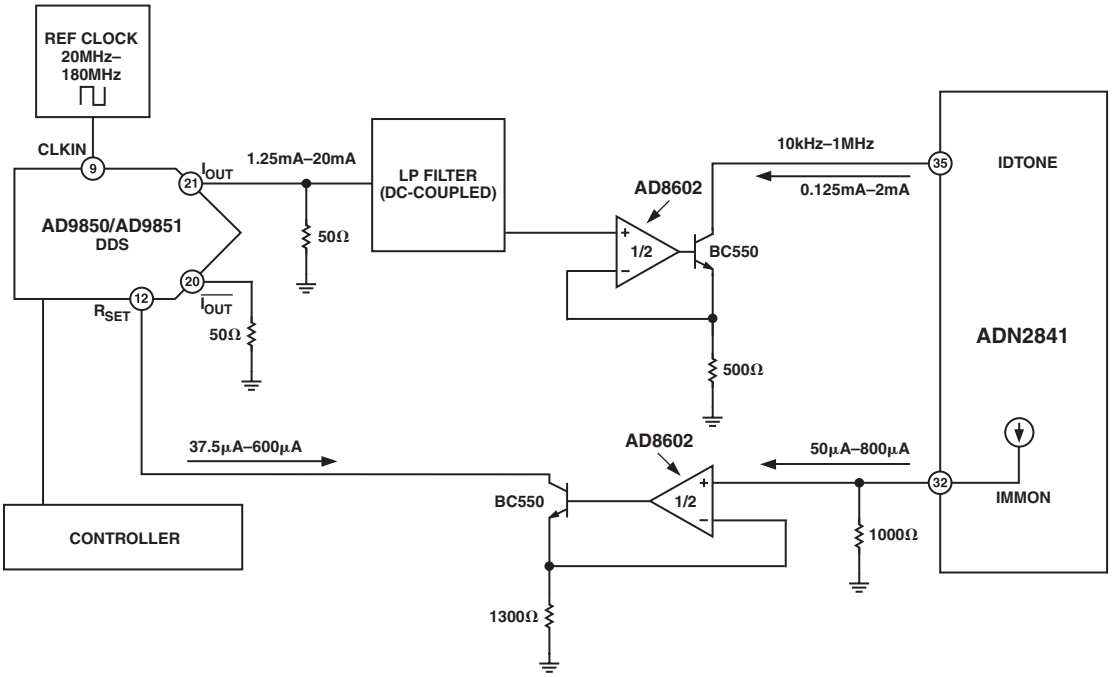

Figure 3. Circuitry to Allow Fiber Identification

The second photodiode current is mirrored to IMPDMON2 for wavelength control purposes and is summed internally for the power control loop. *For single MPD circuits, the MPD2 pin is tied to GND.*

This enables the system designer to use the two currents to control the wavelength of the laser diode using various optical filtering techniques inside the laser module.

If the monitor current functions, IMPDMON and IMPDMON2 are not required, the IMPD and IMPD2 pins can be grounded, and the monitor photodiode output can be connected directly to PSET.

IDTONE (48-LEAD LFCSP ONLY)

The IDTONE pin is supplied for fiber identification/supervisory channels or control purposes in WDM. This pin modulates the optical one level over a possible range of 2% of minimum IMOD to 10% of maximum IMOD. The level of modulation is set by connecting an external current sink between the IDTONE pin and ground. There is a gain of two from this pin to the IMOD current.

Figure 3 shows how an AD9850/AD9851 DDS may be used with the ADN2841 to allow fiber identification.

Note that using IDTONE during transmission may cause optical eye degradation.

DATA, CLOCK INPUTS

Data and clock inputs are ac-coupled (10 nF recommended) and terminated via a 100 Ω internal resistor between DATAP and DATAN and also between CLKP and CLKN pins. There is a high impedance circuit to set the common-mode voltage that is designed to change overtemperature. It is recommended that ac-coupling be used to eliminate the need for matching between common-mode voltages.

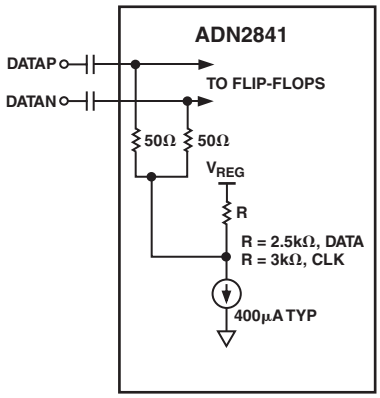

Figure 4. AC-Coupling of Data Inputs

CCBIAS

CCBIAS should be connected to the BIAS pin if the laser diode is connected to the ADN2841 using a capacitor. CCBIAS is a current sink to GND.

AUTOMATIC LASER SHUTDOWN

The ADN2841 ALS allows compliance to ITU-T-G958 (11/94), section 9.7.

When ALS is logic high, both bias and modulation currents are turned off.

Correct operation of ALS can be confirmed by the fail alarm being raised when ALS is asserted. Note this is the only time that DEGRADE will be low while FAIL is high.

ALARM INTERFACES

A 30 kΩ internal pull-up resistor is employed to pull the digital high value of the alarm outputs to V_{CC}. However, the ADN2841 has a feature that allows the user to externally wire resistors in parallel with the 30 kΩ pull-up resistors, thus enabling the user to interface to non-V_{CC} levels. *Non-V_{CC} alarm output levels must be below the V_{CC} used for the ADN2841.*

POWER CONSUMPTION

The ADN2841 die temperature must be kept below 125°C. The θ_{JA} is 25°C/W for the 48-lead LFCSP and 32°C/W for the 32-lead LPCSP when soldered in a four-layered board. Both LFCSP packages have an exposed paddle and as such need to be soldered to the PCB to achieve this thermal performance.

$$T_{DIE} = T_{AMBIENT} + \theta_{JA} \times P$$

$$I_{CC} = I_{CCMIN} + 0.3\, I_{MOD}$$

$$P = V_{CC} \times I_{CC} + \left(I_{BIAS} \times V_{BIAS_PIN}\right) + \left(I_{MOD} \times V_{MOD_PIN}\right)$$

Thus the maximum combination of $I_{BIAS} + I_{MOD}$ must be calculated.

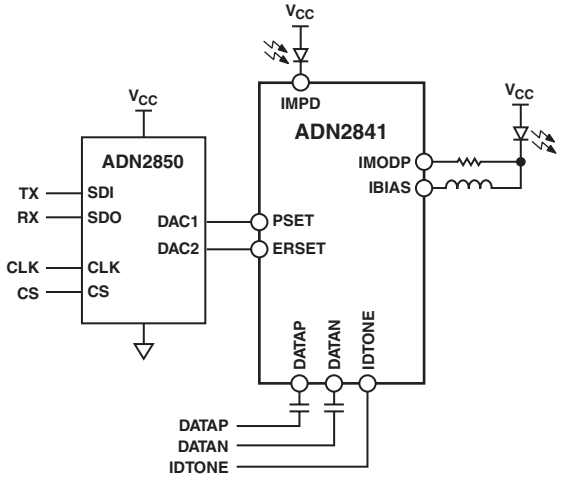

Figure 5. Application Using Optical Supervisor ADN2850 as a Dual 10-Bit Digital Potentiometer Using Thin-Film Resistor Technology to Give Very Low Temperature Coefficients

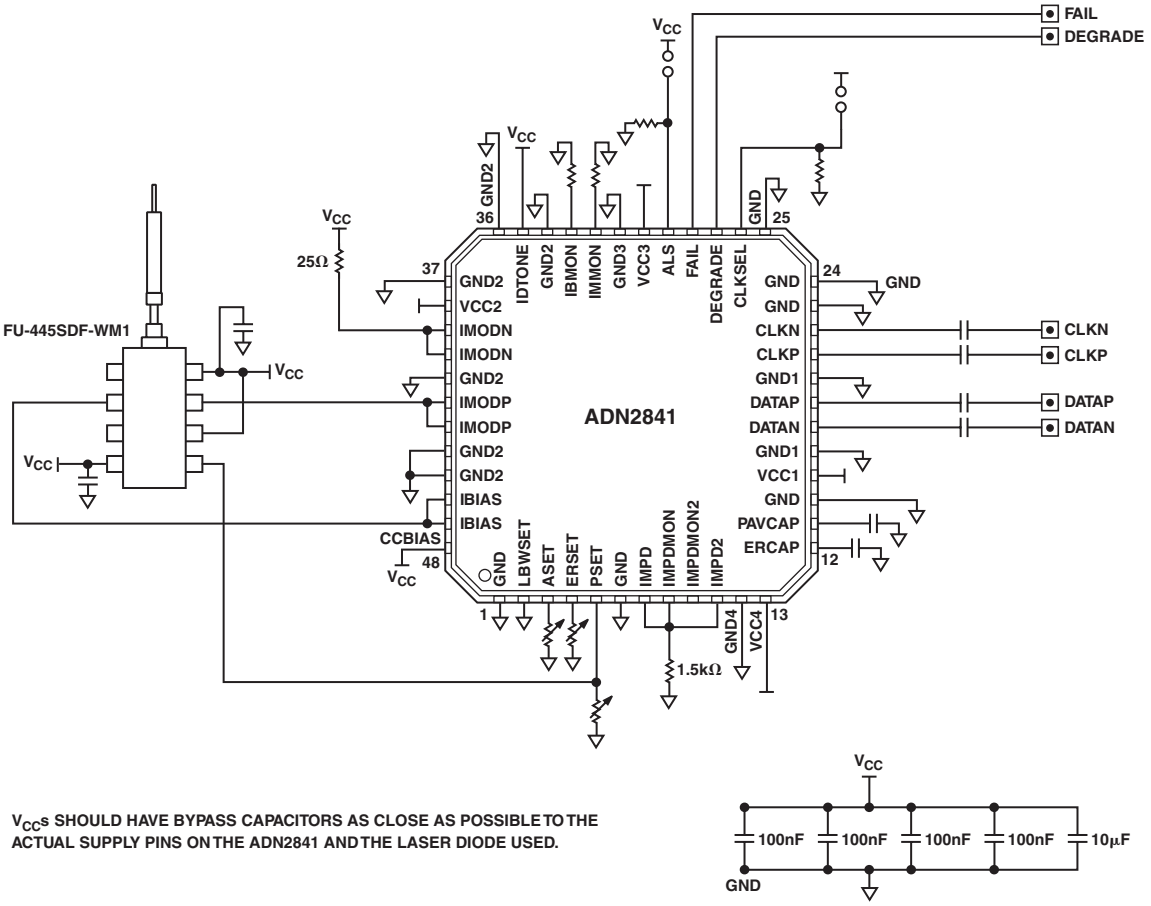

Figure 6. 2.7 Gbps Test Circuit, DC-Coupled, Data Not Clocked, Fast Loop Time Constant Selected

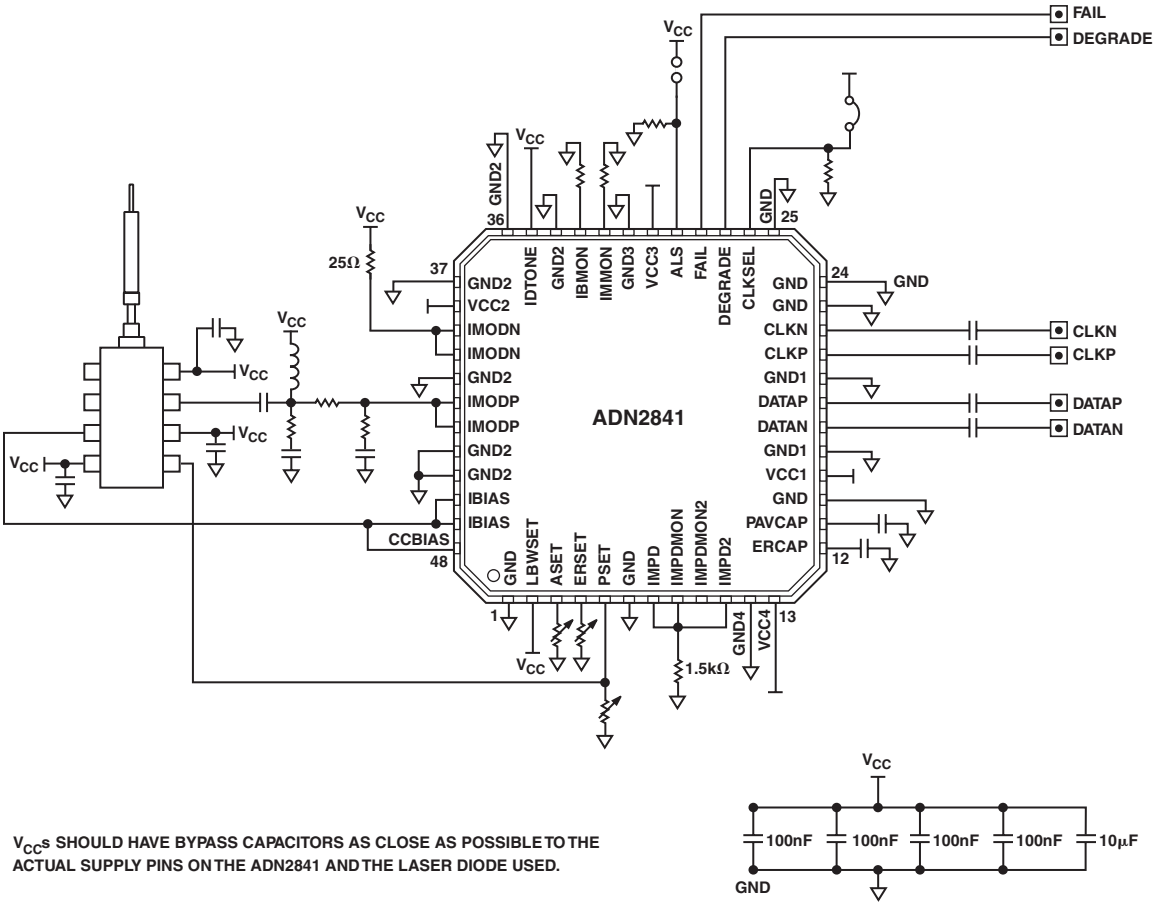

Figure 7. Anyrate Test Circuit, Capacitively Coupled, Data Clocked, Slow Loop Time Constant Selected

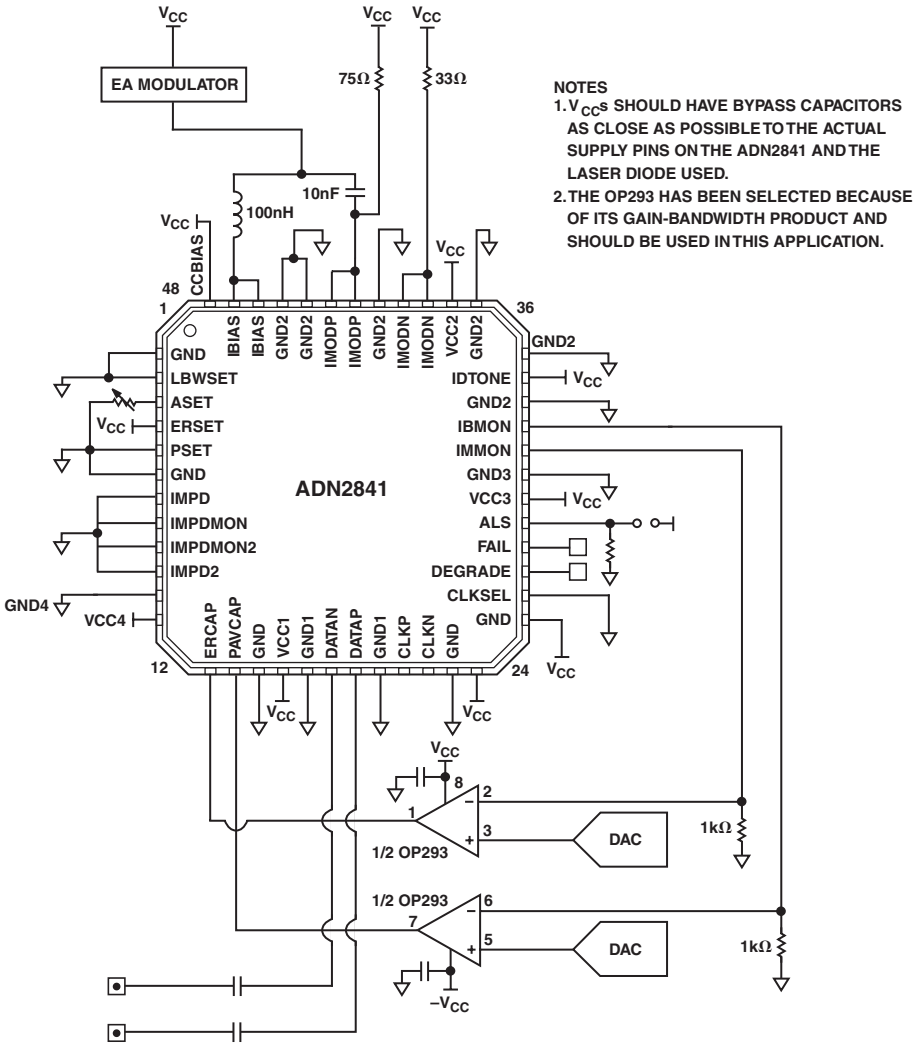

Figure 8. Applications Circuit

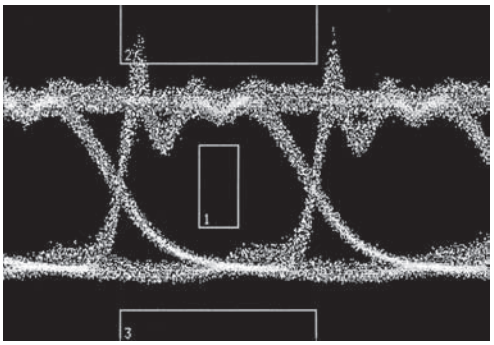

Figure 9. Unfiltered 2.5 Gbps Optical Eye. Average Power = –3 dBm, Extinction Ratio = 9.5 dB. Eye Obtained Using a Mitsubishi FU-445-SDF.

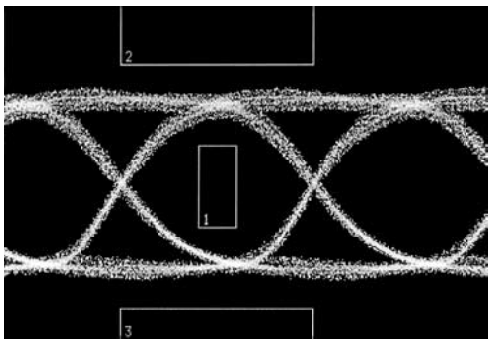

Figure 10. Filtered 2.5 Gbps Optical Eye. Average Power = –3 dBm, Extinction Ratio = 9 dB. Eye Obtained Using a Mitsubishi FU-445-SDF.

OUTLINE DIMENSIONS

48-Lead Frame Chip Scale Package [LFCSP] (CP-48)

Dimensions shown in millimeters

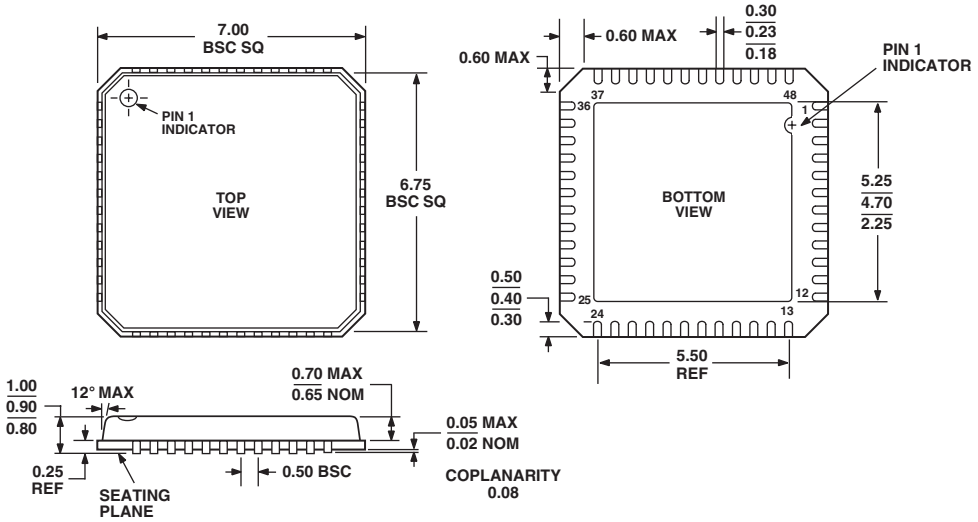

COMPLIANT TO JEDEC STANDARDS MO-220-VKKD-2

32-Lead Frame Chip Scale Package [LFCSP] (CP-32)

Dimensions shown in millimeters

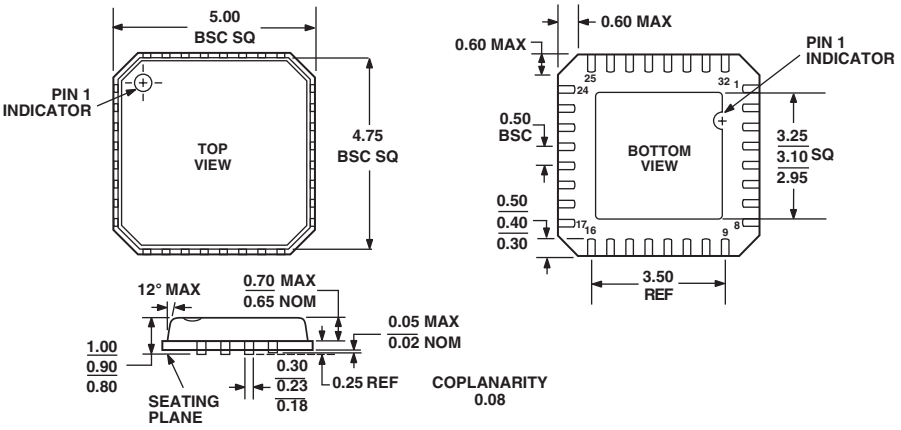

COMPLIANT TO JEDEC STANDARDS MO-220-VHHD-2

Revision History

Location	Page
8/02—Data Sheet changed from REV. 0 to REV. A.	
Figure 8 replaced	10
Updated Outlines	11

C02659–0–9/02(A)

PRINTED IN U.S.A.

Общество с ограниченной ответственностью «МосЧип» ИНН 7719860671 / КПП 771901001
Адрес: 105318, г.Москва, ул.Щербаковская д.3, офис 1107

Данный компонент на территории Российской Федерации

Вы можете приобрести в компании MosChip.

Для оперативного оформления запроса Вам необходимо перейти по данной ссылке:

http://moschip.ru/get-element

Вы можете разместить у нас заказ для любого Вашего проекта, будь то серийное производство или разработка единичного прибора.

В нашем ассортименте представлены ведущие мировые производители активных и пассивных электронных компонентов.

Нашей специализацией является поставка электронной компонентной базы двойного назначения, продукции таких производителей как XILINX, Intel (ex.ALTERA), Vicor, Microchip, Texas Instruments, Analog Devices, Mini-Circuits, Amphenol, Glenair.

Сотрудничество с глобальными дистрибьюторами электронных компонентов, предоставляет возможность заказывать и получать с международных складов практически любой перечень компонентов в оптимальные для Вас сроки.

На всех этапах разработки и производства наши партнеры могут получить квалифицированную поддержку опытных инженеров.

Система менеджмента качества компании отвечает требованиям в соответствии с ГОСТ Р ИСО 9001, ГОСТ РВ 0015-002 и ЭС РД 009

Офис по работе с юридическими лицами:

105318, г.Москва, ул.Щербаковская д.3, офис 1107, 1118, ДЦ «Щербаковский»

Телефон: +7 495 668-12-70 (многоканальный)

Факс: +7 495 668-12-70 (доб.304)

E-mail: info@moschip.ru

Skype отдела продаж:
moschip.ru
moschip.ru_4
moschip.ru_6
moschip.ru_9