MK-043R
4.3 Inch Resistive Touch Display

DATASHEET

Amulet Technologies

August 2015
Revision A

Introduction

The MK-043R is a fully integrated 4.3" WQVGA production color display module, with a resistive touch screen, to support a variety of embedded control interface applications. The MK-043R is "form, fit, and function" the same as the MK-480272C, but with enhanced EMI and ESD protection.

Compatible with GEMstudio™ for quick and easy GUI design, these production-ready units support GIF, JPEG, PNG, and more graphic formats in 24-bit color, plus 8-bit alpha blending (transparency channel) found in high-end consumer electronic products.

The MK-043R has 64Mb (2Mx32) of SDR SDRAM for image caching , and 32Mb of serial data flash for code storage. The module has a 480 x 272 WQVGA TFT LCD with a resistive touch panel.

Amulet's Graphical OS Chip™ with an integrated resistive touch display controller handles all the graphics processing and control as well as the communication to a host controller.

Features

Module

- Amulet Graphical OS – GEM OS
- Operating Temperature: -20°C to 70°C

Display

- 480x272 TFT LCD
- 350 nit (cd/m^2)
- Contrast Ratio: 450:1
- Viewing Angle: 6 o'clock
- Software controlled rotation
- 24-bit color
- PWM controlled brightness

Touch Panel

- Integrated 4-wire Resistive Touch

Communication Interfaces

- 1x UART-TTL
- 1x UART RS232
- 1x SPI with 2 Chip Selects
- 1x I2C
- 2x PWM
- USB 2.0 Device Interface

Power

- 5V DC (through USB or I/O header)

ESD Enhancements

The MK-043R can be visually distinguished from the older MK480272C by looking at the mounting tabs. As seen in Figure 2 on the following page, the mounting tabs are plated with metal. The metal tabs are connected to a ground plane within the PCB which is isolated from signal ground.

It is recommended that the enclosure design, which integrates the display module, should have the mounting tabs connected to chassis ground or earth ground. This allows for any ESD to dissipate through the metal enclosure of the display, to the isolated ground plane, extending out to the tabs, and then to chassis ground. Figure 1 below, shows the cross section of the module. The red line shows the the ground path from the metal housing of display to the grounding spring, to the PCB ground layer, and out to the mounting tab.

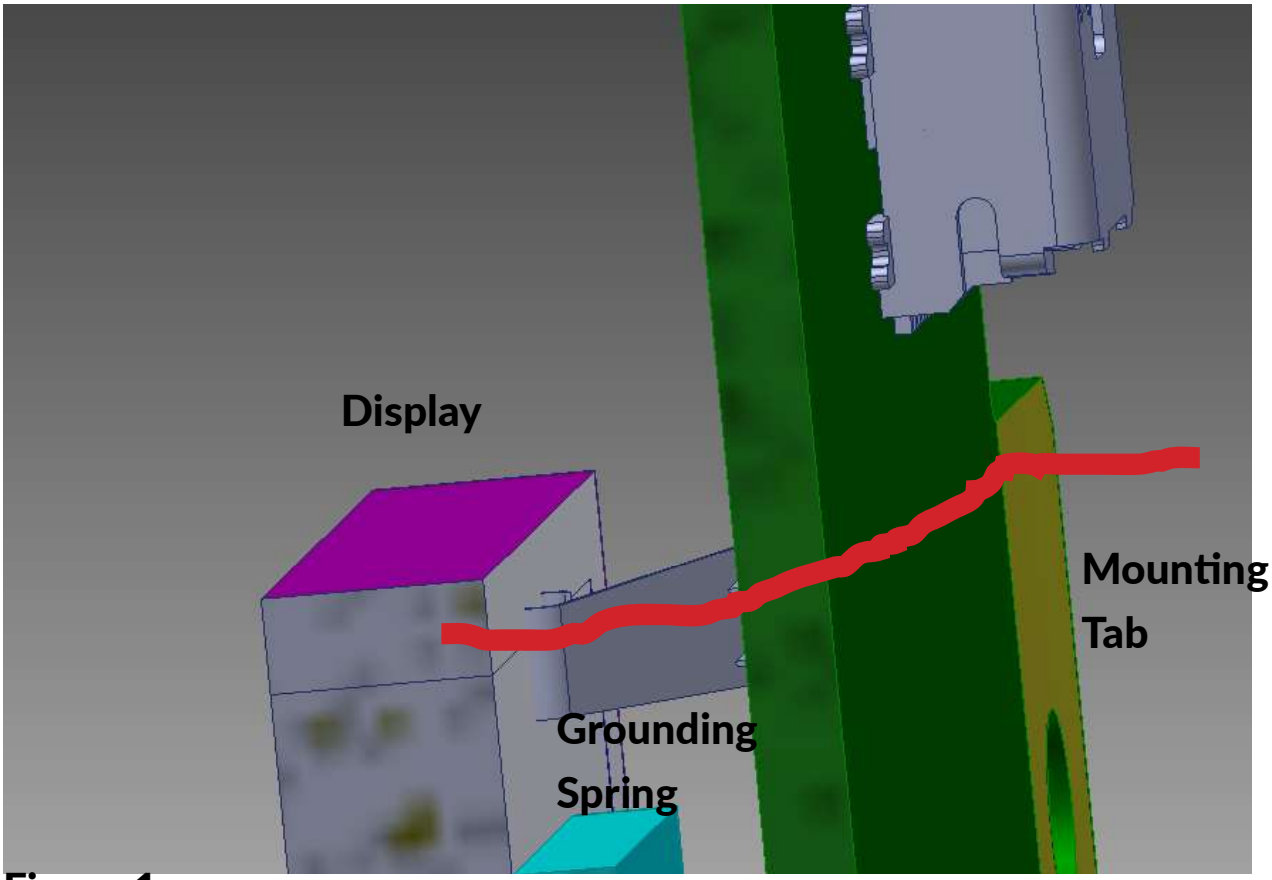

Figure 1

Pin Configuration

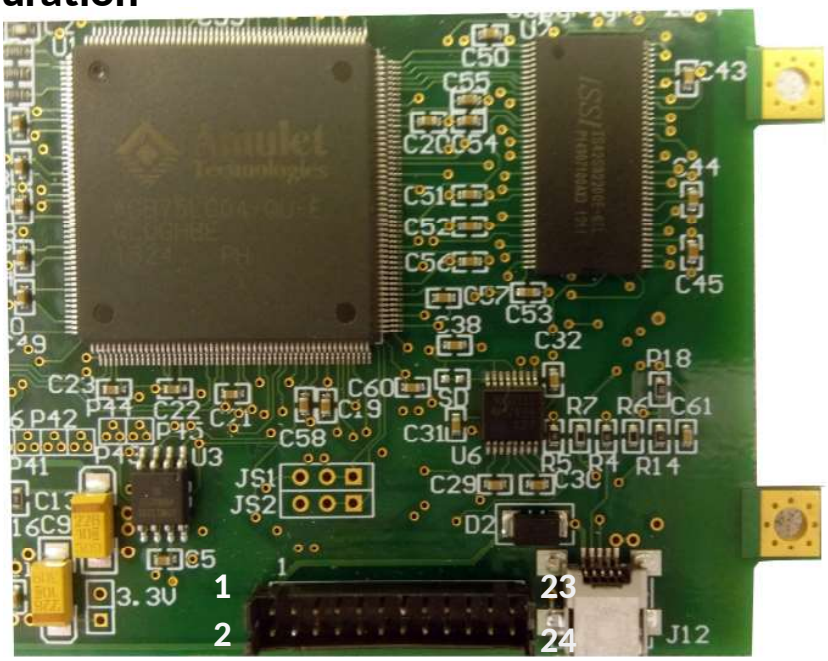

Figure 2

24 Pin I/O Socket - J3

Details	Description	Pins Number		Description	Details
Supply Voltage In	5 VDC IN	1	2	5 VDC IN	Supply Voltage In
Common Ground	GND	3	4	GND	Common Ground
I²C - Serial Clock Line	I2C_SCL	5	6	I²C_SDA	I2C - Serial Data Line
UART0 Receive	UART0_RXD	7	8	UART0_TXD	UART0 Transmit
Pulse Width Modulation Port 1	PWM1	9	10	PWM2	Pulse Width Modulation Port 2
Program Mode, Active Low	PROG_MODE[1]	11	12	PWM0	Pulse Width Modulation Port 0
RS-232 Transmit Port	RS232 TXD	13	14	T_CAL[1]	Touchpanel Calibration Active Low
UART1 Receive TTL levels	UART1_RXD	15	16	UART1_TXD	UART1 Transmit TTL levels
SPI - Chip Select 3	SPI_CS3	17	18	RS232 RXD	RS-232 Receive Port
SPI - Chip Select 2	SPI_CS2	19	20		
SPI - Master Input, Slave Output	SPI_MISO	21	22	SPI_SCLK	SPI - Serial Clock
System Reset, Active Low	RESET[1]	23	24	SPI_MOSI	SPI - Master Out, Slave In

Note 1: Internally Pulled Up

Header J3 24 pin, 2mm, Hirose DF-11-24DP-2DSA

Mating Connectors: Hirose DF11-24DS-2R26

JST PHDR-24VS

J3 UART Connections

For UART TTL-level Communication

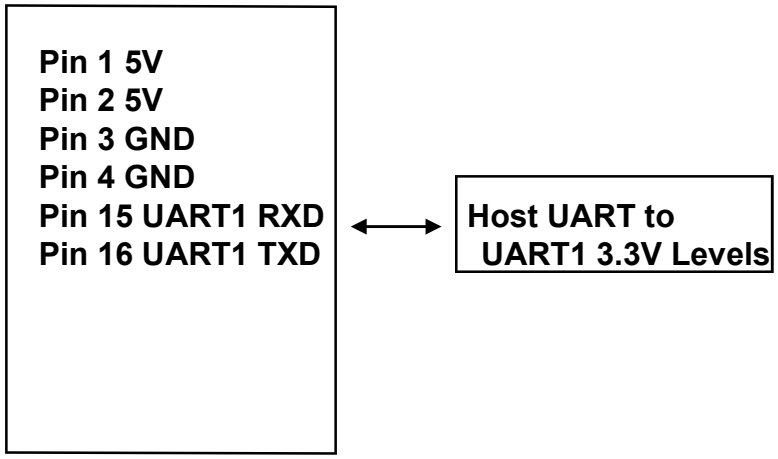

For UART RS232 Communication

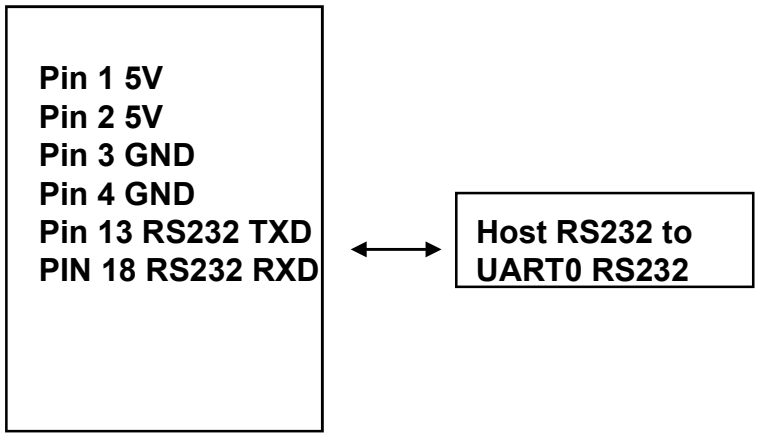

Note: If RS232 is not required, the MK-043R can be hardware configured to utilize UART0 as another TTL-level UART in addition to UART1. Please contact our support department at support@amulettechnologies.com for details. For I/O requirements through SPI or I^2C, also contact Amulet's support department

Mechanical Specification

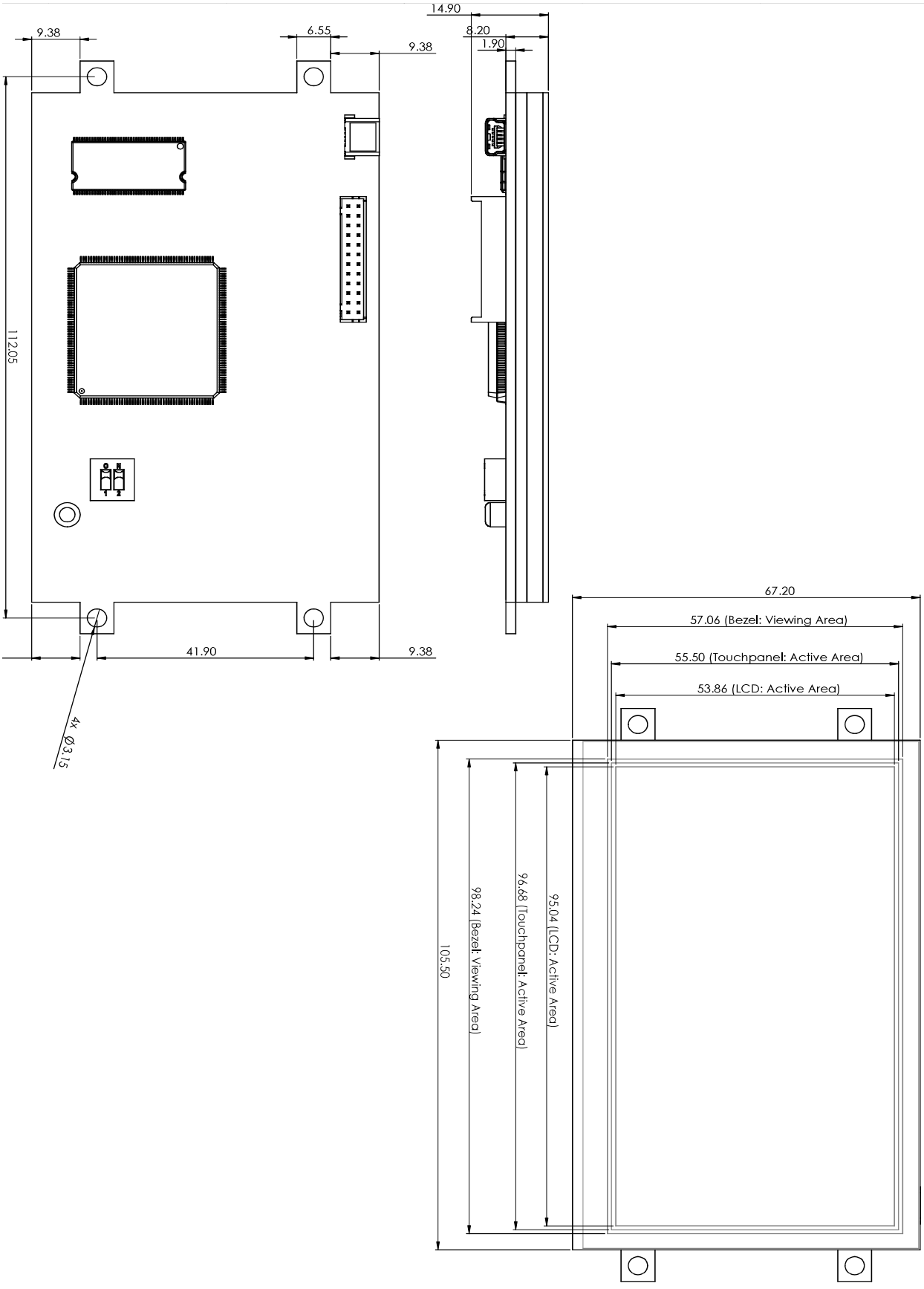

Recommended Operating Conditions

Parameter	Conditions	Min	Typ	Max	Units
USB port Supply Voltage	Stable external supply required	4.5	5	5.5	Vdc

Environmental Specification

Parameter	Min	Typ	Max	Units
Storage Temp	-30		80	°C
Operating Temp	-20		70	°C

Notes:

If you wish to program via UART make sure you can get to the Reset and the Program Mode pins. These will only be needed if a serious programming issue occurs.

In System programming information can be found in the GEMstudio Pro User's Guide under the section titled, "GEMstudio Production File".
GEMstudio Pro User's Guide found under Support/Documentation on the website:
http://www.amulettechnologies.com

Revision History

Date	Revision	Notes
13 July 2015	A	Publication

Contact Us:

You have Embedded GUI Questions. We have Answers.

Amulet Technologies Headquarters
1475 S. Bascom Ave., Suite 111
Campbell, CA 95008
USA
Phone: (408) 374-4956
Fax: (408) 374-4941
Email: info@amulettechnologies.com

Sales and Customer Support:
Phone: (888) 374-8688
Sales Email: sales@amulettechnologies.com
Support Email: support@amulettechnologies.com

Developer Support: devSupport@amulettechnologies.com

Disclaimer: The information in this document is provided in connection with Amulet Technologies, LLC (Amulet) products. No license, express or implied, to any intellectual property right is granted by this document or in connection with the sale of Amulet products. EXCEPT AS SET FORTH IN AMULET'S TERMS AND CONDITIONS OF SALE WHERE AMULET IS THE SELLER, AMULET ASSUMES NO LIABILITY WHATSOEVER AND DISCLAIMS ANY EXPRESS, IMPLIED OR STATUTORY WARRANTY RELATING TO ITS PRODUCTS INCLUDING, BUT NOT LIMITED TO, THE IMPLIED WARRANTY OF MERCHANTABILITY, FITNESS FOR A PARTICULAR PURPOSE, OR NON-INFRINGEMENT. IN NO EVENT SHALL AMULET BE LIABLE FOR ANY DIRECT, INDIRECT, CONSEQUENTIAL, PUNITIVE, SPECIAL OR INCIDENTAL DAMAGES (INCLUDING, WITHOUT LIMITATION, DAMAGES FOR LOSS AND PROFITS, BUSINESS INTERRUPTION, OR LOSS OF INFORMATION) ARISING OUT OF THE USE OR INABILITY TO USE THIS DOCUMENT, EVEN IF AMULET HAS BEEN ADVISED OF THE POSSIBILITY OF SUCH DAMAGES. Amulet makes no representations or warranties with respect to the accuracy or completeness of the contents of this document and reserves the right to make changes to specifications and product descriptions at any time without notice. Amulet does not make any commitment to update the information contained herein. Unless specifically provided otherwise, Amulet products are not approved for use in automotive applications, medical applications (including, but not limited to, life support systems and other medical equipment), avionics, nuclear applications, or other high-risk applications (e.g., applications that, if they fail, can be reasonably expected to result in significant personal injury or death).

Общество с ограниченной ответственностью «МосЧип» ИНН 7719860671 / КПП 771901001
Адрес: 105318, г.Москва, ул.Щербаковская д.3, офис 1107

Данный компонент на территории Российской Федерации

Вы можете приобрести в компании MosChip.

Для оперативного оформления запроса Вам необходимо перейти по данной ссылке:

http://moschip.ru/get-element

Вы можете разместить у нас заказ для любого Вашего проекта, будь то серийное производство или разработка единичного прибора.

В нашем ассортименте представлены ведущие мировые производители активных и пассивных электронных компонентов.

Нашей специализацией является поставка электронной компонентной базы двойного назначения, продукции таких производителей как XILINX, Intel (ex.ALTERA), Vicor, Microchip, Texas Instruments, Analog Devices, Mini-Circuits, Amphenol, Glenair.

Сотрудничество с глобальными дистрибьюторами электронных компонентов, предоставляет возможность заказывать и получать с международных складов практически любой перечень компонентов в оптимальные для Вас сроки.

На всех этапах разработки и производства наши партнеры могут получить квалифицированную поддержку опытных инженеров.

Система менеджмента качества компании отвечает требованиям в соответствии с ГОСТ Р ИСО 9001, ГОСТ РВ 0015-002 и ЭС РД 009

Офис по работе с юридическими лицами:

105318, г.Москва, ул.Щербаковская д.3, офис 1107, 1118, ДЦ «Щербаковский»

Телефон: +7 495 668-12-70 (многоканальный)

Факс: +7 495 668-12-70 (доб.304)

E-mail: info@moschip.ru

Skype отдела продаж:
moschip.ru
moschip.ru_4
moschip.ru_6
moschip.ru_9