19-5584; Rev 10/10

DS9034PCX
PowerCap with Crystal

www.maxim-ic.com

GENERAL DESCRIPTION

The DS9034PCX PowerCap is designed to be a lithium power source for nonvolatile timekeeping RAMs in Dallas Semiconductor's directly surface-mountable PowerCap Module (PCM) package. After a PowerCap module board has been soldered in place and cleaned, the DS9034PCX PowerCap is placed on top of the PCM board to form a complete PowerCap module package. The PowerCap is keyed to prevent incorrect attachment.

The DS9034PCX can be easily removed by inserting a regular screwdriver into a detachment feature and prying gently outward and upward to release the PowerCap from the PowerCap module board.

ABSOLUTE MAXIMUM RATINGS

Storage Temperature Range: -40°C to +85°C

Stresses beyond those listed under "Absolute Maximum Ratings" may cause permanent damage to the device. These are stress ratings only, and functional operation of the device at these or any other conditions beyond those indicated in the operational sections of the specifications is not implied. Exposure to the absolute maximum rating conditions for extended periods may affect device.

BATTERY CHARACTERISTICS

Nominal Voltage: 3V

Nominal Capacity: 130mAhr

Chemistry: Li(CF)x

CRYSTAL CHARACTERISTICS

Nominal Frequency: 32.768kHz

Load Capacitance: 6pF

FEATURES

- Provides 10 Years of Battery Backup Power for Nonvolatile Timekeeping RAMs in the PowerCap Module Package (PCM)
- Snaps Directly Onto Surface-Mounted PowerCap Module Boards
- Detachment Feature Allows Easy Removal
- Compatible with these 34-Pin PowerCap Module Boards:

DS1386P	DS1553P/YP/WP
DS1486P	DS1554P/YP/WP
DS1643P	DS1556P/YP/WP
DS1644P	DS1557P/YP/WP
DS1646P	DS1744P/YP/WP
DS1647P	DS1746P/YP/WP
DS1743P/WP	DS1747P/YP/WP
DS1251YP/WP	
DS1248YP/WP	
DS1244YP/WP	

PACKAGE INFORMATION

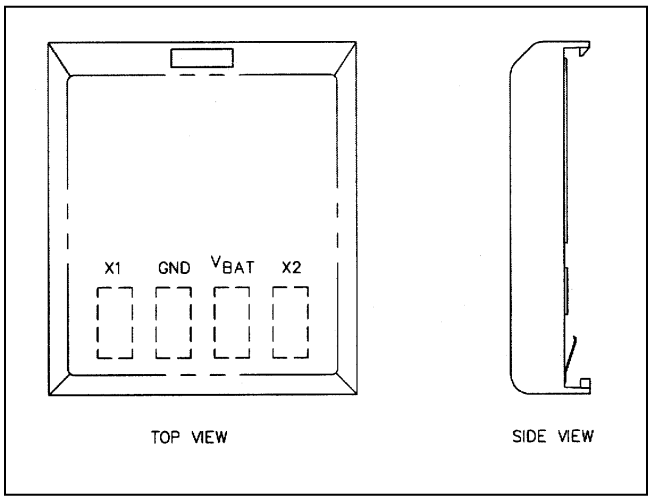

PIN DESCRIPTION

NAME	FUNCTION
X1, X2	32.768kHz Crystal Connections
V_{BAT}	+3V Battery Output
GND	Ground

ORDERING INFORMATION

PART	TEMP RANGE	VOLTAGE (V)	PIN-PACKAGE	TOP MARK*
DS9034PCX+	0°C to +70°C	3.0	PCM	DS9034PCX
DS9034I-PCX+	-40°C to +85°C	3.0	PCM	DS9034PCXI

+Denotes a lead(Pb)-free/RoHS-compliant package.
**A "+" on the top of the package indicates a lead(Pb)-free device.*

PowerCap ATTACHMENT AND REMOVAL

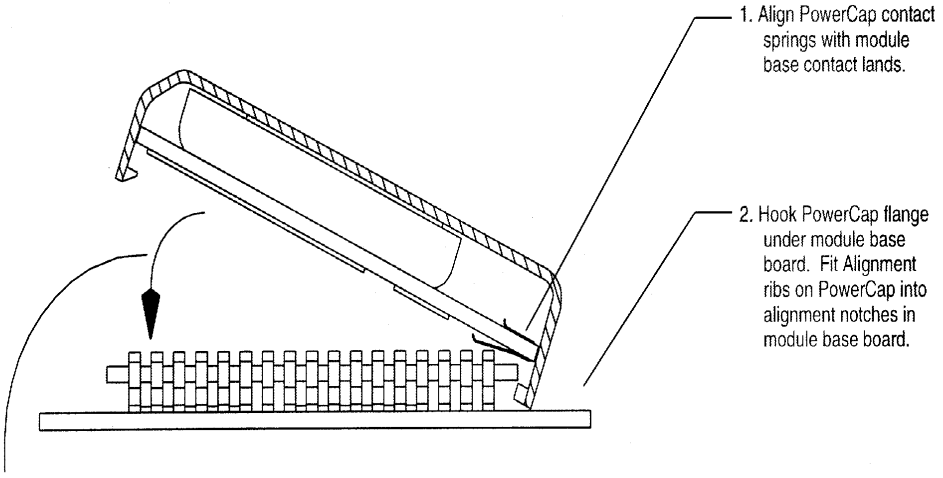

3. Push down and forward with the screwdriver while inserting the PowerCap. This action will "open" the attachment feature.

PowerCap REMOVAL

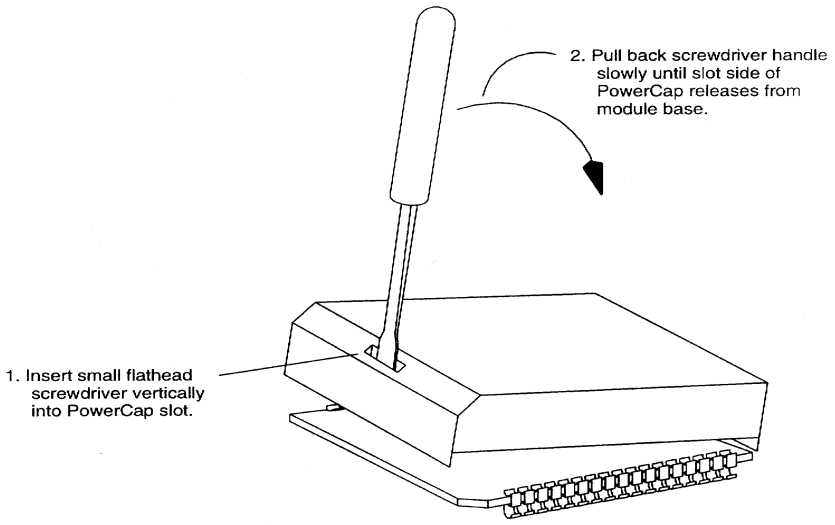

PACKAGE INFORMATION

For the latest package outline information and land patterns, go to **www.maxim-ic.com/packages**. Note that a "+", "#", or "-" in the package code indicates RoHS status only. Package drawings may show a different suffix character, but the drawing pertains to the package regardless of RoHS status.

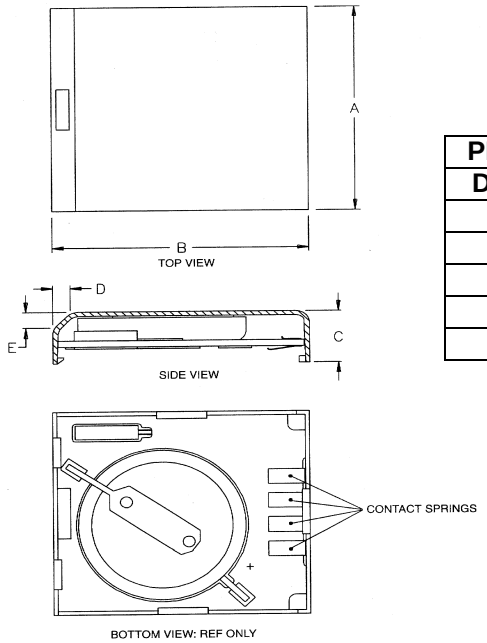

PKG	INCHES		
DIM	MIN	MON	MAX
A	0.845	0.850	0.855
B	0.955	0.960	0.965
C	0.213	0.223	0.233
D	0.065	0.070	0.075
E	0.065	0.070	0.075

POWER CAP: BATTERY AND CRYSTAL

ATTENTION: BATTERY COMPONENT

The DS9034PCX contains a lithium battery. Do not short, ground, or apply external voltages to the electrical portions of this device. Do not expose to temperatures over +85°C. Do not subject this device to any type of cleaning process. Store only in nonconductive containers. Failure to observe these precautions may result in battery discharge or decreased battery life.

REVISION HISTORY

REVISION DATE	DESCRIPTION	PAGES CHANGED
10/10	Updated the *Features* section to remove DS1543P/YP/WP from list of compatible PowerCap module boards, updated the *Ordering Information* table to remove leaded versions	1, 2

Maxim cannot assume responsibility for use of any circuitry other than circuitry entirely embodied in a Maxim product. No circuit patent licenses are implied. Maxim reserves the right to change the circuitry and specifications without notice at any time.

Maxim Integrated Products, 120 San Gabriel Drive, Sunnyvale, CA 94086 408-737-7600

© 2010 Maxim Integrated Products Maxim and the Dallas logo are a registered trademark of Maxim Integrated Products, Inc.

Общество с ограниченной ответственностью «МосЧип» ИНН 7719860671 / КПП 771901001
Адрес: 105318, г.Москва, ул.Щербаковская д.3, офис 1107

Данный компонент на территории Российской Федерации

Вы можете приобрести в компании MosChip.

Для оперативного оформления запроса Вам необходимо перейти по данной ссылке:

http://moschip.ru/get-element

Вы можете разместить у нас заказ для любого Вашего проекта, будь то серийное производство или разработка единичного прибора.

В нашем ассортименте представлены ведущие мировые производители активных и пассивных электронных компонентов.

Нашей специализацией является поставка электронной компонентной базы двойного назначения, продукции таких производителей как XILINX, Intel (ex.ALTERA), Vicor, Microchip, Texas Instruments, Analog Devices, Mini-Circuits, Amphenol, Glenair.

Сотрудничество с глобальными дистрибьюторами электронных компонентов, предоставляет возможность заказывать и получать с международных складов практически любой перечень компонентов в оптимальные для Вас сроки.

На всех этапах разработки и производства наши партнеры могут получить квалифицированную поддержку опытных инженеров.

Система менеджмента качества компании отвечает требованиям в соответствии с ГОСТ Р ИСО 9001, ГОСТ РВ 0015-002 и ЭС РД 009

Офис по работе с юридическими лицами:

105318, г.Москва, ул.Щербаковская д.3, офис 1107, 1118, ДЦ «Щербаковский»

Телефон: +7 495 668-12-70 (многоканальный)

Факс: +7 495 668-12-70 (доб.304)

E-mail: info@moschip.ru

Skype отдела продаж:
moschip.ru
moschip.ru_4
moschip.ru_6
moschip.ru_9