EVERLIGHT AMERICAS

DATASHEET

SMD ▪ B
EASR3212RGA0

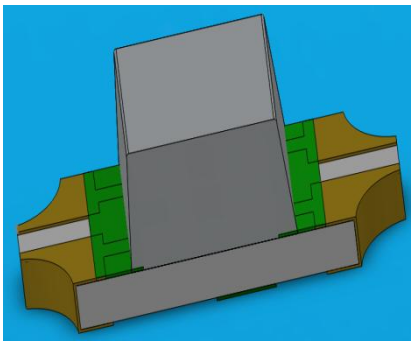

Features

- Package in 8mm tape on 7″ diameter reel.
- Compatible with automatic placement equipment.
- Compatible with infrared and vapor phase reflow solder process.
- Mono-color type.
- Pb-free.
- The product itself will remain within RoHS compliant version
- Compliance with EU REACH
- Compliance Halogen Free .(Br <900 ppm ,Cl <900 ppm , Br+Cl < 1500 ppm).

Description

- The SMD LED is much smaller than lead frame type components, thus enable smaller board ize, higher packing density, reduced storage space and finally smaller equipment to be obtained.
- Besides, lightweight makes them ideal for miniature applications. etc.

Applications

- Telecommunication: indicator and backlighting in telephone and fax.
- Flat backlight for LCD, switch and symbol.
- General use.

Copyright © 2010, Everlight Americas Inc. All Rights Reserved. Release Date : Mar 21.2013. Issue No: 1

Device Selection Guide

Chip Type	Chip Materials	Emitted Color	Resin Color
R7	AlGaInP	Dark Red	Water Clear
G6	AlGaInP	Brilliant Yellow Green	Water Clear

Absolute Maximum Ratings (Ta=25℃)

Parameter	Symbol	Rating	Unit
Reverse Voltage	V_R	5	V
Forward Current	I_F	R7：25 G6：25	mA
Peak Forward Current (Duty 1/10 @1KHz)	I_{FP}	R7：60 G6：60	mA
Power Dissipation	Pd	R7：60 G6：60	mW
Operating Temperature	T_{opr}	-40 ~ +85	℃
Storage Temperature	Tstg	-40 ~ +90	℃
Electrostatic Discharge	ESD_{HBM}	R6：2000 G6：2000	V
Soldering Temperature	T_{sol}	Reflow Soldering : 260 ℃ for 10 sec. Hand Soldering : 350 ℃ for 3 sec.	

Electro-Optical Characteristics (Ta=25℃)

Parameter	Symbol	Min.	Typ.	Max.	Unit	Condition
Luminous Intensity	Iv	R7：18.0 G6：14.5	----- -----	72.0 45.0	mcd	I_F =20mA
Viewing Angle	$2\theta_{1/2}$	-----	130	-----	deg	
Peak Wavelength	λ p	R7：----- G6：-----	639 575	----- -----	nm	
Dominant Wavelength	λ d	R7：----- G6：-----	631 573	----- -----	nm	
Spectrum Radiation Bandwidth	△λ	R7：----- G6：-----	20 20	----- -----	nm	
Forward Voltage	V_F	R7：1.70 G6：1.70	2.00 2.00	2.40 2.40	V	
Reverse Current	I_R	R7：----- G6：-----	----- -----	10 10	μA	V_R =5V

Note:
1.Tolerance of Luminous Intensity: ±11%

Copyright © 2010, Everlight Americas Inc. All Rights Reserved. Release Date : Mar 21.2013. Issue No: 1

R7
Bin Range of Luminous Intensity

Bin Code	Min.	Max.	Unit	Condition
1	18.0	28.5	mcd	I_F =20mA
2	28.5	45.0		
3	45.0	72.0		

G6
Bin Range of Luminous Intensity

Bin Code	Min.	Max.	Unit	Condition
1	14.5	18.0	mcd	I_F =20mA
2	18.0	28.5		
3	28.5	45.0		

Note:
1.Tolerance of Luminous Intensity: ±11%

Copyright © 2010, Everlight Americas Inc. All Rights Reserved. Release Date : Mar 21.2013. Issue No: 1

Typical Electro-Optical Characteristics Curves
R7

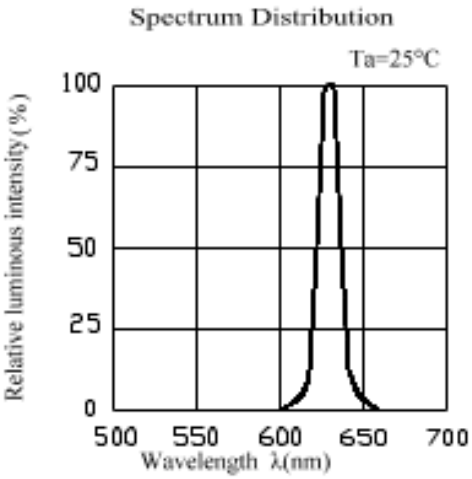

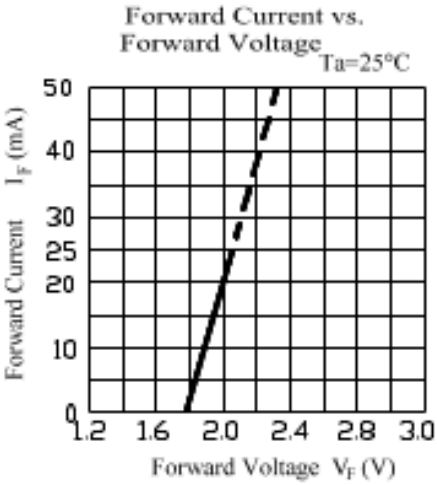

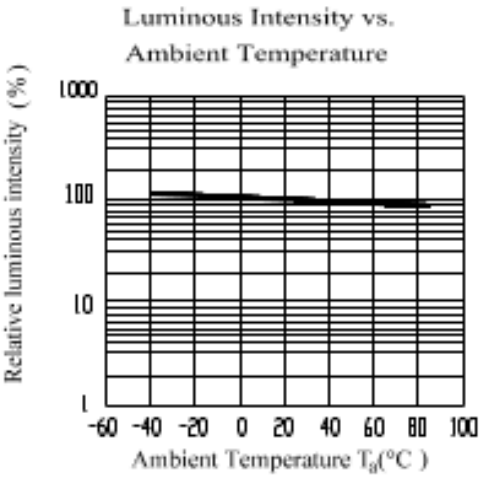

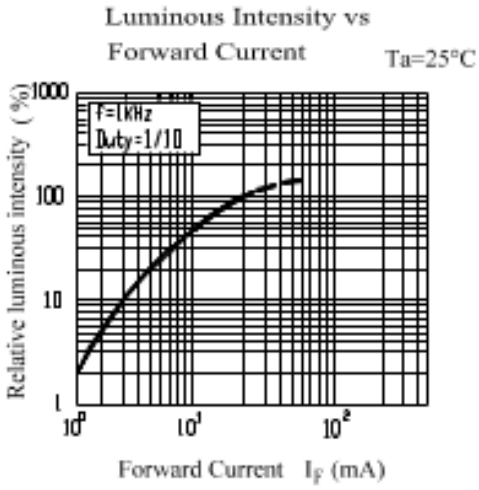

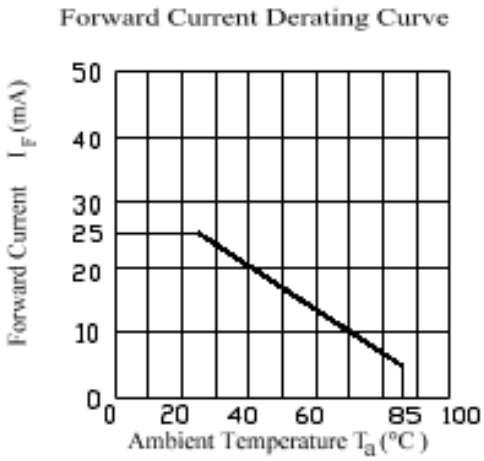

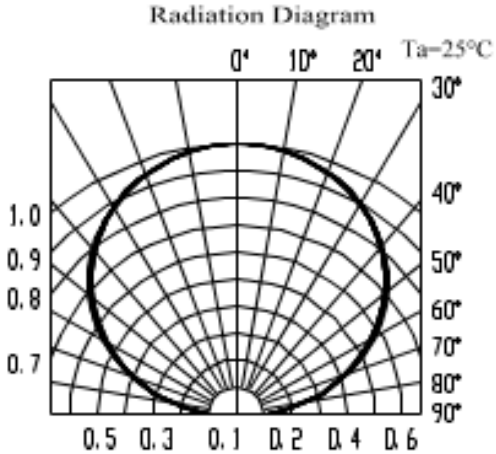

Copyright © 2010, Everlight Americas Inc. All Rights Reserved. Release Date : Mar 21.2013. Issue No: 1

Typical Electro-Optical Characteristics Curves
G6

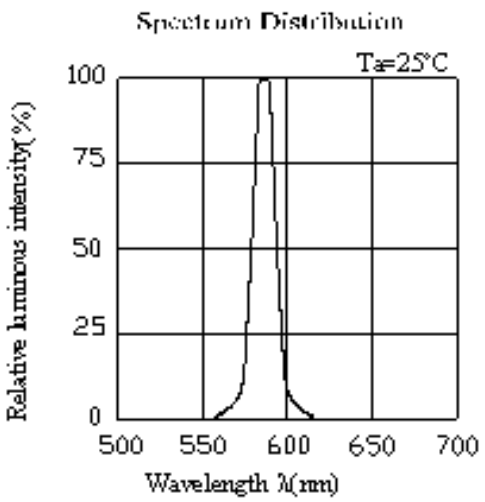

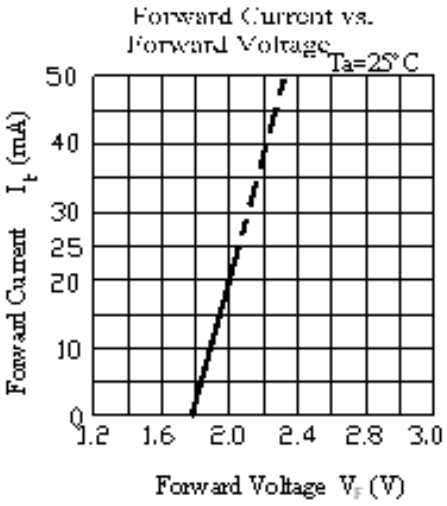

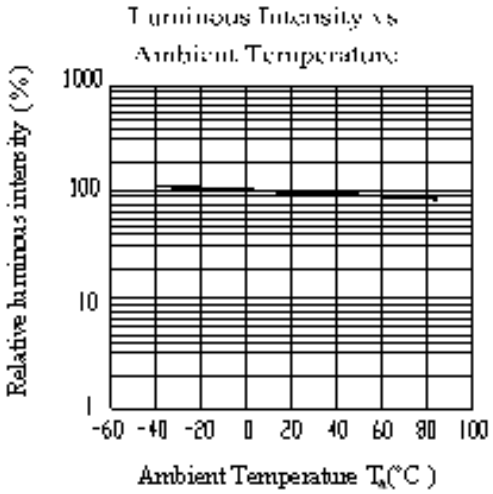

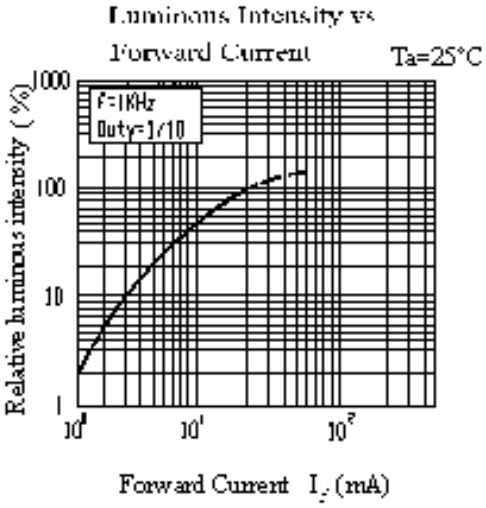

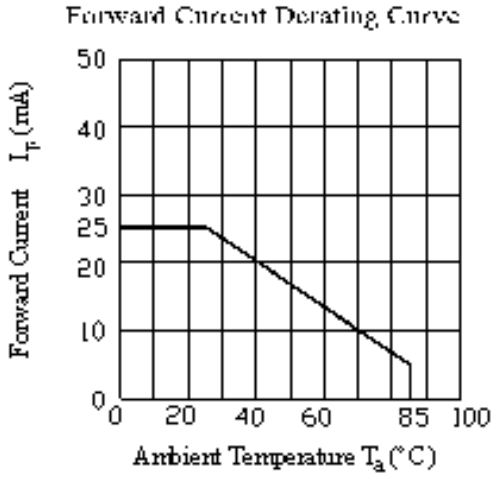

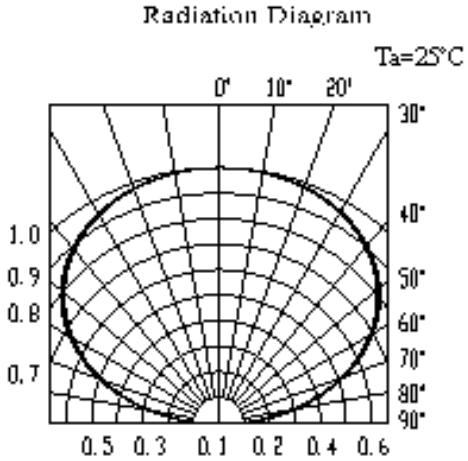

Copyright © 2010, Everlight Americas Inc. All Rights Reserved. Release Date : Mar 21.2013. Issue No: 1

Package Outline Dimensions

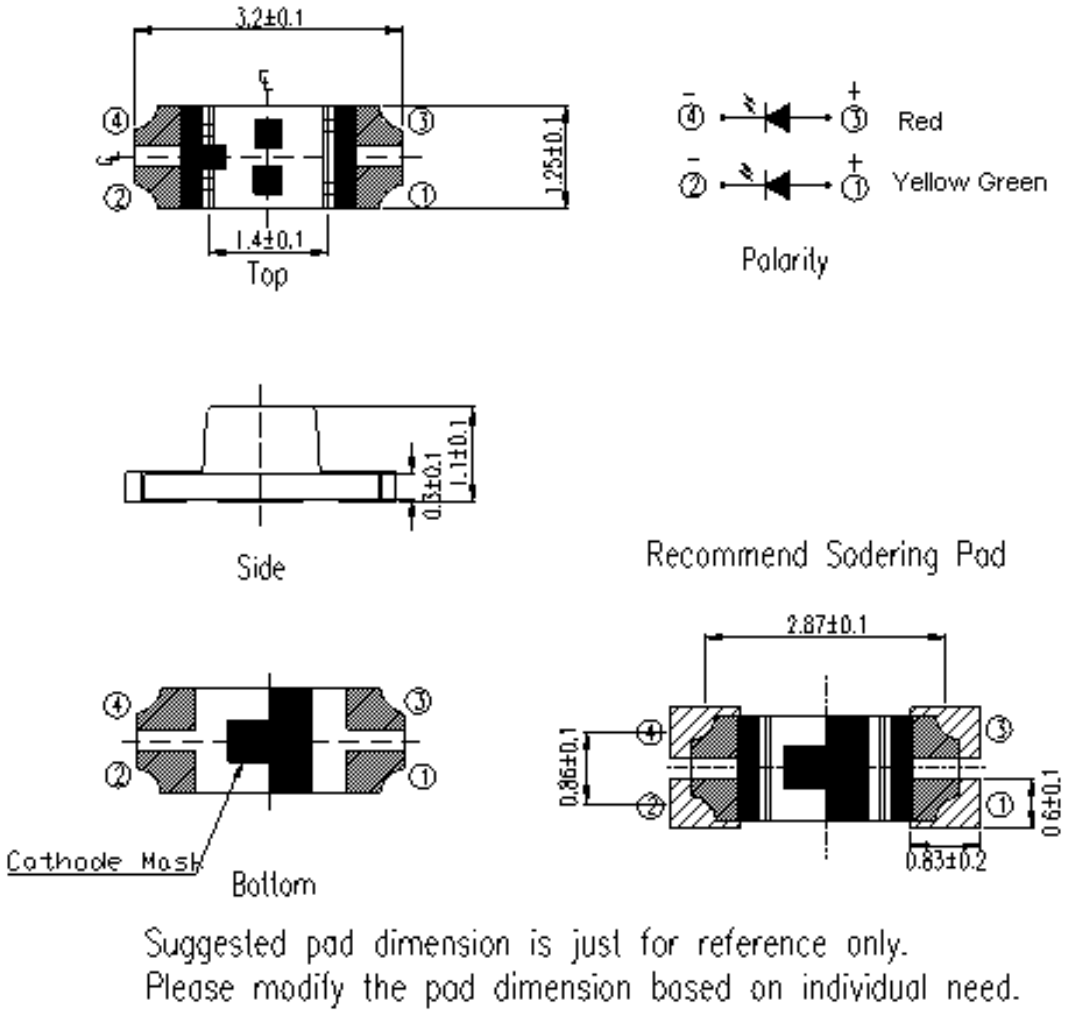

Note: Tolerances unless mentioned ±0.1mm. Unit = mm

Copyright © 2010, Everlight Americas Inc. All Rights Reserved. Release Date : Mar 21.2013. Issue No: 1

Moisture Resistant Packing Materials

Label Explanation

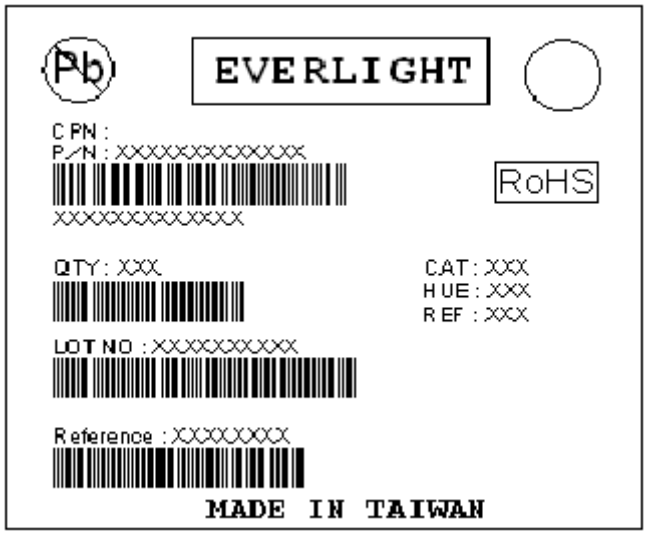

- CPN: Customer's Product Number
- P/N: Product Number
- QTY: Packing Quantity
- CAT: Luminous Intensity Rank
- HUE: Chromaticity Coordinates & Dom. Wavelength Rank
- REF: Forward Voltage Rank
- LOT No: Lot Number

Reel Dimensions

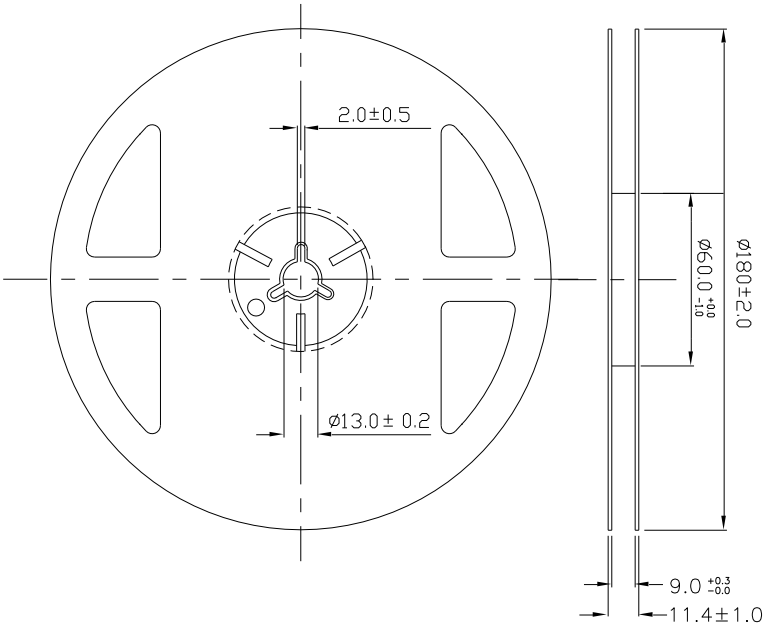

Note: The tolerances unless mentioned is ±0.1mm ,Unit = mm

Copyright © 2010, Everlight Americas Inc. All Rights Reserved. Release Date : Mar 21.2013. Issue No: 1

Carrier Tape Dimensions: Loaded quantity 2000 PCS per reel

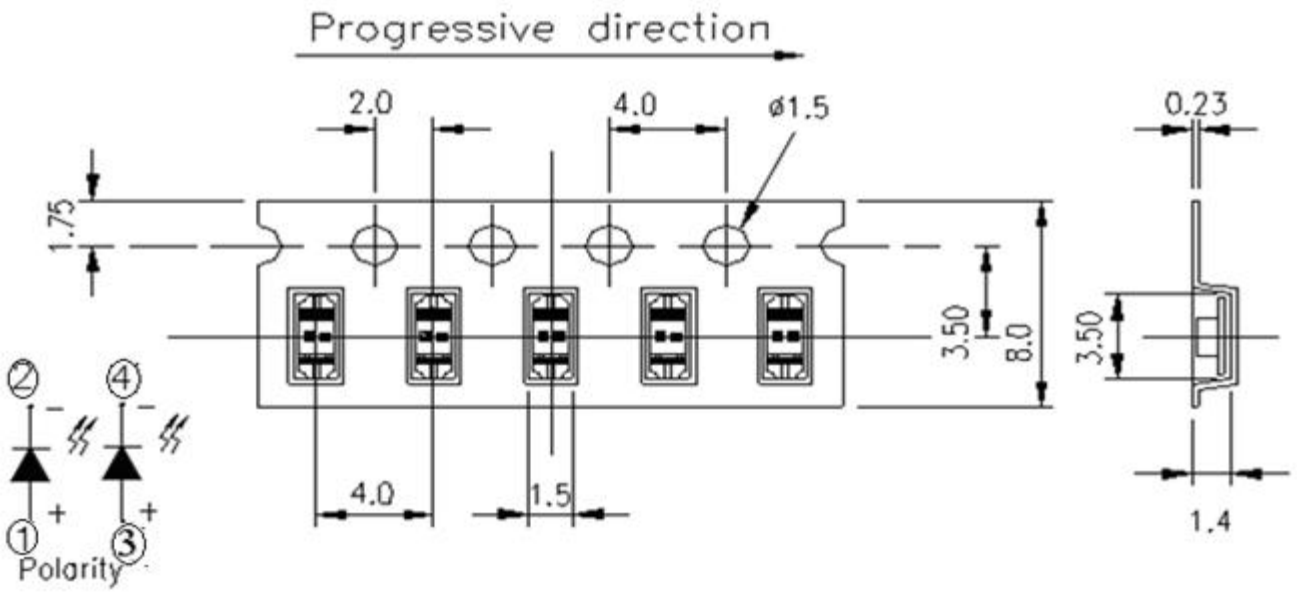

Note: The tolerances unless mentioned is ±0.1mm ,Unit = mm

Moisture Resistant Packaging

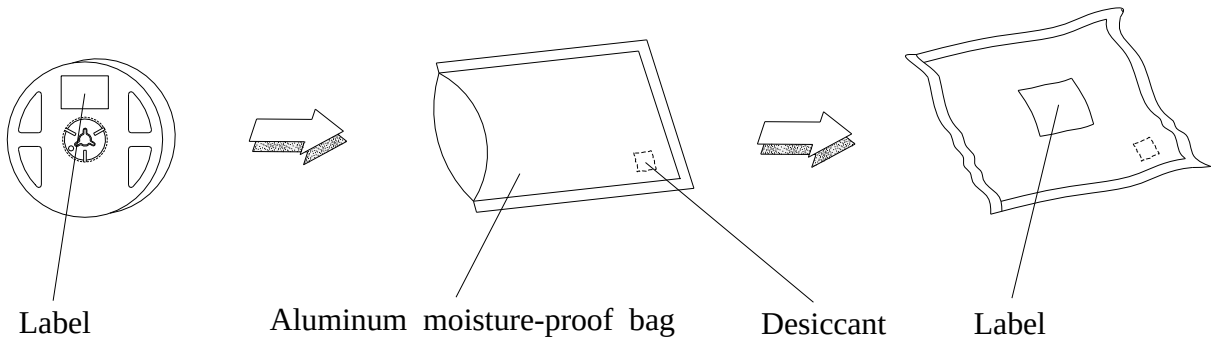

Copyright © 2010, Everlight Americas Inc. All Rights Reserved. Release Date : Mar 21.2013. Issue No: 1

Precautions For Use

1. Over-current-proof

Customer must apply resistors for protection, otherwise slight voltage shift will cause big current change (Burn out will happen).

2. Storage

2.1 Do not open moisture proof bag before the products are ready to use.

2.2 Before opening the package: The LEDs should be kept at 30℃ or less and 90%RH or less.

2.3 After opening the package: The LED's floor life is 1 year under 30℃ or less and 60% RH or less. If unused LEDs remain, it should be stored in moisture proof packages.

2.4 If the moisture absorbent material (silica gel) has faded away or the LEDs have exceeded the storage time, baking treatment should be performed using the following conditions.

Baking treatment : 60±5℃ for 24 hours.3. Soldering Condition

3.1 Pb-free solder temperature profile

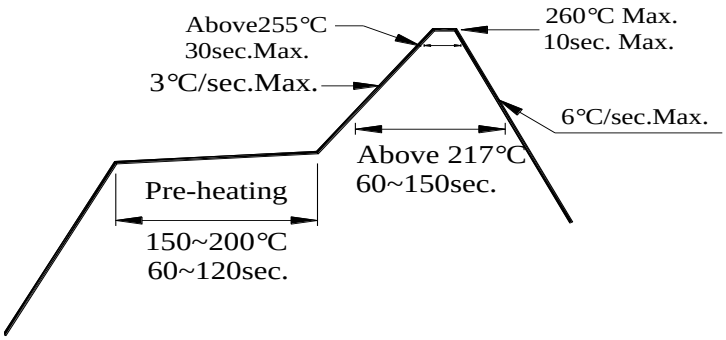

3.2 Reflow soldering should not be done more than two times.

3.3 When soldering, do not put stress on the LEDs during heating.

3.4 After soldering, do not warp the circuit board.

4.Soldering Iron

Each terminal is to go to the tip of soldering iron temperature less than 350℃ for 3 seconds within once in less than the soldering iron capacity 25W. Leave two seconds and more intervals, and do soldering of each terminal. Be careful because the damage of the product is often started at the time of the hand solder.

5.Repairing

Repair should not be done after the LEDs have been soldered. When repairing is unavoidable, a double-head soldering iron should be used (as below figure). It should be confirmed beforehand whether the characteristics of the LEDs will or will not be damaged by repairing.

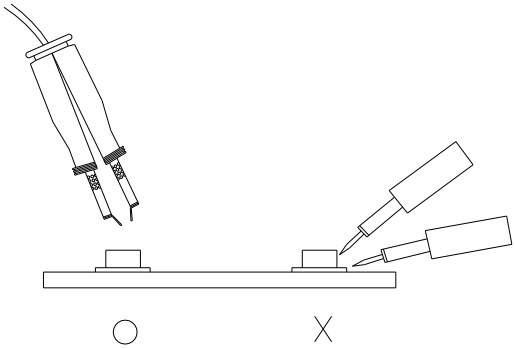

Copyright © 2010, Everlight Americas Inc. All Rights Reserved. Release Date : Mar 21.2013. Issue No: 1

Application Restrictions

High reliability applications such as military/aerospace, automotive safety/security systems, and medical equipment may require different product. If you have any concerns, please contact Everlightamericas before using this product in your application. This specification guarantees the quality and performance of the product as an individual component. Do not use this product beyond the specification described in this document.

Copyright © 2010, Everlight Americas Inc. All Rights Reserved. Release Date : Mar 21.2013. Issue No: 1

Общество с ограниченной ответственностью «МосЧип» ИНН 7719860671 / КПП 771901001
Адрес: 105318, г.Москва, ул.Щербаковская д.3, офис 1107

Данный компонент на территории Российской Федерации

Вы можете приобрести в компании MosChip.

Для оперативного оформления запроса Вам необходимо перейти по данной ссылке:

http://moschip.ru/get-element

Вы можете разместить у нас заказ для любого Вашего проекта, будь то серийное производство или разработка единичного прибора.

В нашем ассортименте представлены ведущие мировые производители активных и пассивных электронных компонентов.

Нашей специализацией является поставка электронной компонентной базы двойного назначения, продукции таких производителей как XILINX, Intel (ex.ALTERA), Vicor, Microchip, Texas Instruments, Analog Devices, Mini-Circuits, Amphenol, Glenair.

Сотрудничество с глобальными дистрибьюторами электронных компонентов, предоставляет возможность заказывать и получать с международных складов практически любой перечень компонентов в оптимальные для Вас сроки.

На всех этапах разработки и производства наши партнеры могут получить квалифицированную поддержку опытных инженеров.

Система менеджмента качества компании отвечает требованиям в соответствии с ГОСТ Р ИСО 9001, ГОСТ РВ 0015-002 и ЭС РД 009

Офис по работе с юридическими лицами:

105318, г.Москва, ул.Щербаковская д.3, офис 1107, 1118, ДЦ «Щербаковский»

Телефон: +7 495 668-12-70 (многоканальный)

Факс: +7 495 668-12-70 (доб.304)

E-mail: info@moschip.ru

Skype отдела продаж:
moschip.ru
moschip.ru_4
moschip.ru_6
moschip.ru_9