IS41LV16100B

1M x 16 (16-MBIT) DYNAMIC RAM WITH EDO PAGE MODE

DECEMBER 2006

FEATURES

- TTL compatible inputs and outputs; tristate I/O
- Refresh Interval:
  - — Auto refresh Mode: 1,024 cycles /16 ms
  - — $\overline{RAS}$-Only, $\overline{CAS}$-before-$\overline{RAS}$ (CBR), and Hidden
  - — Self refresh Mode: 1,024 cycles /128 ms
- JEDEC standard pinout
- Single power supply: 3.3V ± 10%
- Byte Write and Byte Read operation via two $\overline{CAS}$
- Industrial Temperature Range: -40°C to +85°C
- Lead-free available

DESCRIPTION

The *ISSI* IS41LV16100B is 1,048,576 x 16-bit high-performance CMOS Dynamic Random Access Memories. These devices offer an accelerated cycle access called EDO Page Mode. EDO Page Mode allows 1,024 random accesses within a single row with access cycle time as short as 20 ns per 16-bit word.

These features make the IS41LV16100B ideally suited for high-bandwidth graphics, digital signal processing, high-performance computing systems, and peripheral applications.

The IS41LV16100B is packaged in a 42-pin 400-mil SOJ and 400-mil 50- (44-) pin TSOP (Type II).

PIN CONFIGURATIONS

50(44)-Pin TSOP (Type II)

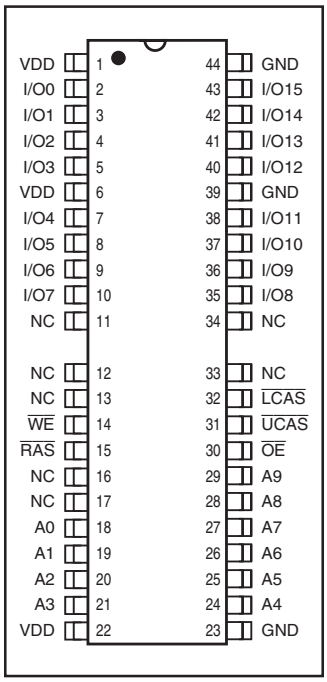

42-Pin SOJ

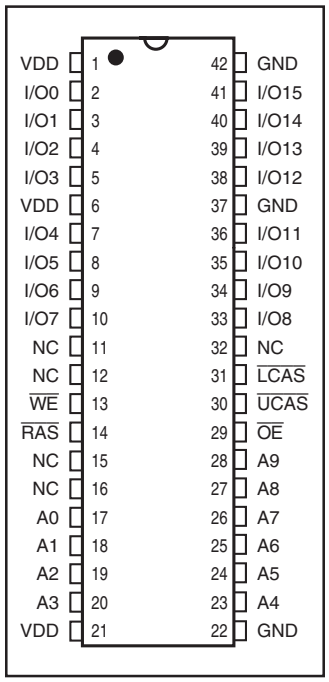

KEY TIMING PARAMETERS

Parameter	-50	-60	Unit
Max. $\overline{RAS}$ Access Time (t_{RAC})	50	60	ns
Max. $\overline{CAS}$ Access Time (t_{CAC})	14	15	ns
Max. Column Address Access Time (t_{AA})	25	30	ns
Min. EDO Page Mode Cycle Time (t_{PC})	30	40	ns
Min. Read/Write Cycle Time (t_{RC})	85	110	ns

PIN DESCRIPTIONS

A0-A9	Address Inputs
I/O0-15	Data Inputs/Outputs
$\overline{WE}$	Write Enable
$\overline{OE}$	Output Enable
$\overline{RAS}$	Row Address Strobe
$\overline{UCAS}$	Upper Column Address Strobe
$\overline{LCAS}$	Lower Column Address Strobe
V_{DD}	Power
GND	Ground
NC	No Connection

Copyright © 2006 Integrated Silicon Solution, Inc. All rights reserved. ISSI reserves the right to make changes to this specification and its products at any time without notice. ISSI assumes no liability arising out of the application or use of any information, products or services described herein. Customers are advised to obtain the latest version of this device specification before relying on any published information and before placing orders for products.

FUNCTIONAL BLOCK DIAGRAM

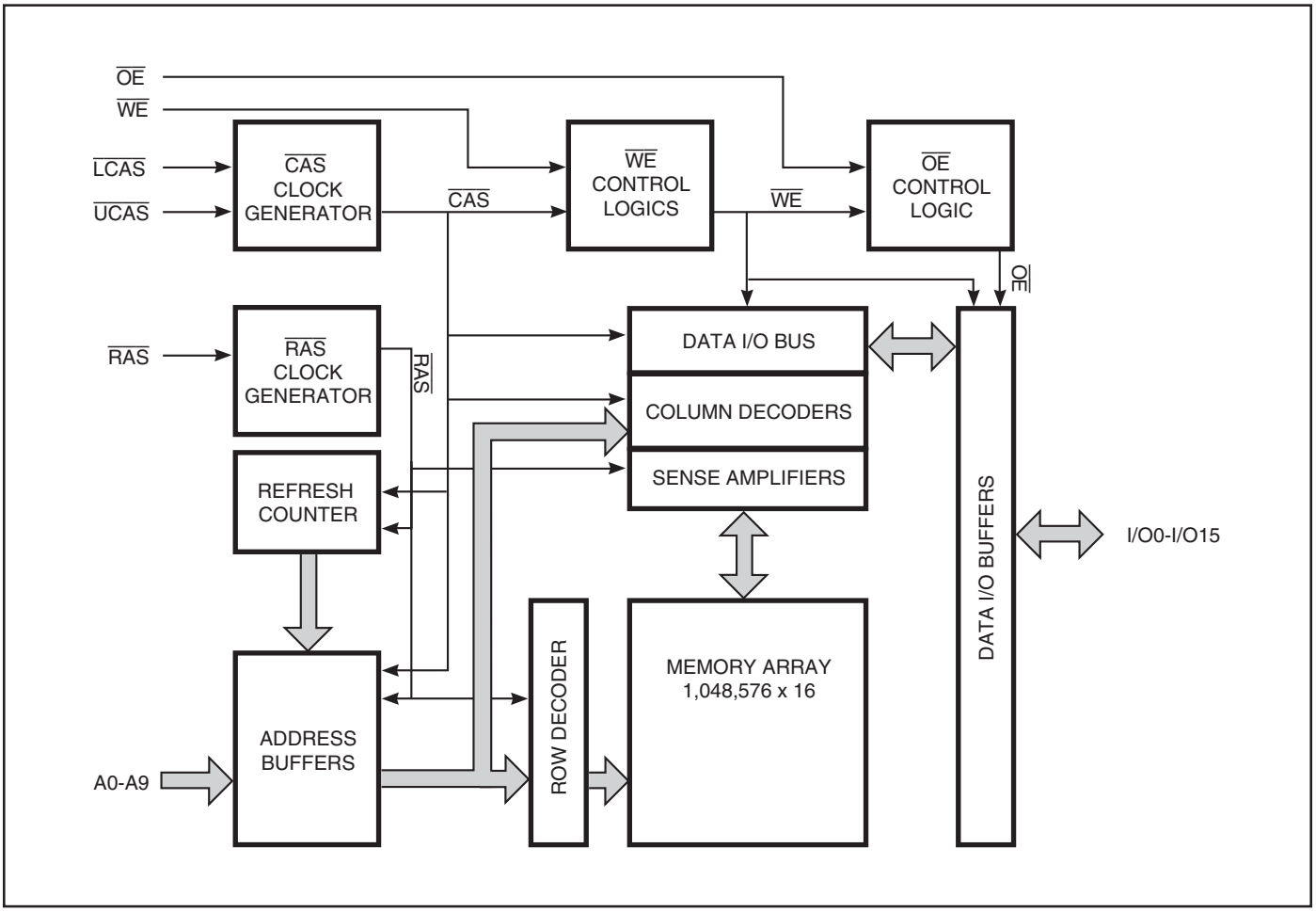

TRUTH TABLE

Function		$\overline{RAS}$	$\overline{LCAS}$	$\overline{UCAS}$	$\overline{WE}$	$\overline{OE}$	Address t_R/t_C	I/O
Standby		H	H	H	X	X	X	High-Z
Read: Word		L	L	L	H	L	ROW/COL	D_{OUT}
Read: Lower Byte		L	L	H	H	L	ROW/COL	Lower Byte, D_{OUT} Upper Byte, High-Z
Read: Upper Byte		L	H	L	H	L	ROW/COL	Lower Byte, High-Z Upper Byte, D_{OUT}
Write: Word (Early Write)		L	L	L	L	X	ROW/COL	D_{IN}
Write: Lower Byte (Early Write)		L	L	H	L	X	ROW/COL	Lower Byte, D_{IN} Upper Byte, High-Z
Write: Upper Byte (Early Write)		L	H	L	L	X	ROW/COL	Lower Byte, High-Z Upper Byte, D_{IN}
Read-Write(1,2)		L	L	L	H→L	L→H	ROW/COL	D_{OUT}, D_{IN}
EDO Page-Mode Read(2)	1st Cycle:	L	H→L	H→L	H	L	ROW/COL	D_{OUT}
	2nd Cycle:	L	H→L	H→L	H	L	NA/COL	D_{OUT}
	Any Cycle:	L	L→H	L→H	H	L	NA/NA	D_{OUT}
EDO Page-Mode Write(1)	1st Cycle:	L	H→L	H→L	L	X	ROW/COL	D_{IN}
	2nd Cycle:	L	H→L	H→L	L	X	NA/COL	D_{IN}
EDO Page-Mode(1,2) Read-Write	1st Cycle:	L	H→L	H→L	H→L	L→H	ROW/COL	D_{OUT}, D_{IN}
	2nd Cycle:	L	H→L	H→L	H→L	L→H	NA/COL	D_{OUT}, D_{IN}
Hidden Refresh	Read(2)	L→H→L	L	L	H	L	ROW/COL	D_{OUT}
	Write(1,3)	L→H→L	L	L	L	X	ROW/COL	D_{OUT}
$\overline{RAS}$-Only Refresh		L	H	H	X	X	ROW/NA	High-Z
CBR Refresh(4)		H→L	L	L	X	X	X	High-Z

Notes:
1. These WRITE cycles may also be BYTE WRITE cycles (either $\overline{LCAS}$ or $\overline{UCAS}$ active).
2. These READ cycles may also be BYTE READ cycles (either $\overline{LCAS}$ or $\overline{UCAS}$ active).
3. EARLY WRITE only.
4. At least one of the two $\overline{CAS}$ signals must be active ($\overline{LCAS}$ or $\overline{UCAS}$).

Functional Description

The IS41LV16100B is a CMOS DRAM optimized for high-speed bandwidth, low power applications. During READ or WRITE cycles, each bit is uniquely addressed through the 16 address bits. These are entered ten bits (A0-A9) at time. The row address is latched by the Row Address Strobe ($\overline{RAS}$). The column address is latched by the Column Address Strobe ($\overline{CAS}$). $\overline{RAS}$ is used to latch the first nine bits and $\overline{CAS}$ is used to latch the latter nine bits.

The IS41LV16100B has two $\overline{CAS}$ controls, $\overline{LCAS}$ and $\overline{UCAS}$. The $\overline{LCAS}$ and $\overline{UCAS}$ inputs internally generates a $\overline{CAS}$ signal functioning in an identical manner to the single $\overline{CAS}$ input on the other 1M x 16 DRAMs. The key difference is that each $\overline{CAS}$ controls its corresponding I/O tristate logic (in conjunction with $\overline{OE}$ and $\overline{WE}$ and $\overline{RAS}$). $\overline{LCAS}$ controls I/O0 through I/O7 and $\overline{UCAS}$ controls I/O8 through I/O15.

The IS41LV16100B $\overline{CAS}$ function is determined by the first $\overline{CAS}$ ($\overline{LCAS}$ or $\overline{UCAS}$) transitioning LOW and the last transitioning back HIGH. The two $\overline{CAS}$ controls give the IS41LV16100B both BYTE READ and BYTE WRITE cycle capabilities.

Memory Cycle

A memory cycle is initiated by bring $\overline{RAS}$ LOW and it is terminated by returning both $\overline{RAS}$ and $\overline{CAS}$ HIGH. To ensures proper device operation and data integrity any memory cycle, once initiated, must not be ended or aborted before the minimum t_{RAS} time has expired. A new cycle must not be initiated until the minimum precharge time t_{RP}, t_{CP} has elapsed.

Read Cycle

A read cycle is initiated by the falling edge of $\overline{CAS}$ or $\overline{OE}$, whichever occurs last, while holding $\overline{WE}$ HIGH. The column address must be held for a minimum time specified by t_{AR}. Data Out becomes valid only when t_{RAC}, t_{AA}, t_{CAC} and t_{OEA} are all satisfied. As a result, the access time is dependent on the timing relationships between these parameters.

Write Cycle

A write cycle is initiated by the falling edge of $\overline{CAS}$ and $\overline{WE}$, whichever occurs last. The input data must be valid at or before the falling edge of $\overline{CAS}$ or $\overline{WE}$, whichever occurs first.

Auto Refresh Cycle

To retain data, 1,024 refresh cycles are required in each 16 ms period. There are two ways to refresh the memory.

1. By clocking each of the 1,024 row addresses (A0 through A9) with $\overline{RAS}$ at least once every 128 ms. Any read, write, read-modify-write or $\overline{RAS}$-only cycle refreshes the addressed row.
2. Using a $\overline{CAS}$-before-$\overline{RAS}$ refresh cycle. $\overline{CAS}$-before-$\overline{RAS}$ refresh is activated by the falling edge of $\overline{RAS}$, while holding $\overline{CAS}$ LOW. In $\overline{CAS}$-before-$\overline{RAS}$ refresh cycle, an internal 9-bit counter provides the row addresses and the external address inputs are ignored.

$\overline{CAS}$-before-$\overline{RAS}$ is a refresh-only mode and no data access or device selection is allowed. Thus, the output remains in the High-Z state during the cycle.

Self Refresh Cycle

The Self Refresh allows the user a dynamic refresh, data retention mode at the extended refresh period of 128 ms. i.e., 125 µs per row when using distributed CBR refreshes. The feature also allows the user the choice of a fully static, low power data retention mode. The optional Self Refresh feature is initiated by performing a CBR Refresh cycle and holding $\overline{RAS}$ LOW for the specified tRAS.

The Self Refresh mode is terminated by driving $\overline{RAS}$ HIGH for a minimum time of tRP. This delay allows for the completion of any internal refresh cycles that may be in process at the time of the $\overline{RAS}$ LOW-to-HIGH transition. If the DRAM controller uses a distributed refresh sequence, a burst refresh is not required upon exiting Self Refresh.

However, if the DRAM controller utilizes a $\overline{RAS}$-only or burst refresh sequence, all 1,024 rows must be refreshed within the average internal refresh rate, prior to the resumption of normal operation.

Extended Data Out Page Mode

EDO page mode operation permits all 1,024 columns within a selected row to be randomly accessed at a high data rate.

In EDO page mode read cycle, the data-out is held to the next $\overline{CAS}$ cycle's falling edge, instead of the rising edge. For this reason, the valid data output time in EDO page mode is extended compared with the fast page mode. In the fast page mode, the valid data output time becomes shorter as the $\overline{CAS}$ cycle time becomes shorter. Therefore, in EDO page mode, the timing margin in read cycle is larger than that of the fast page mode even if the $\overline{CAS}$ cycle time becomes shorter.

In EDO page mode, due to the extended data function, the $\overline{CAS}$ cycle time can be shorter than in the fast page mode if the timing margin is the same.

The EDO page mode allows both read and write operations during one $\overline{RAS}$ cycle, but the performance is equivalent to that of the fast page mode in that case.

Power-On

After application of the V_{DD} supply, an initial pause of 200 µs is required followed by a minimum of eight initialization cycles (any combination of cycles containing a $\overline{RAS}$ signal).

During power-on, it is recommended that $\overline{RAS}$ track with V_{DD} or be held at a valid V_{IH} to avoid current surges.

ABSOLUTE MAXIMUM RATINGS(1)

Symbol	Parameters		Rating	Unit
V_T	Voltage on Any Pin Relative to GND	3.3V	–0.5 to +4.6	V
V_{DD}	Supply Voltage	3.3V	–0.5 to +4.6	V
I_{OUT}	Output Current		50	mA
P_D	Power Dissipation		1	W
T_A	Commercial Operation Temperature Industrial Operation Temperature		0 to +70 -40 to +85	°C °C
T_{STG}	Storage Temperature		–55 to +125	°C

Note:
1. Stress greater than those listed under ABSOLUTE MAXIMUM RATINGS may cause permanent damage to the device. This is a stress rating only and functional operation of the device at these or any other conditions above those indicated in the operational sections of this specification is not implied. Exposure to absolute maximum rating conditions for extended periods may affect reliability.

RECOMMENDED OPERATING CONDITIONS (Voltages are referenced to GND.)

Symbol	Parameter		Min.	Typ.	Max.	Unit
V_{DD}	Supply Voltage	**3.3V**	3.0	3.3	3.6	V
V_{IH}	Input High Voltage	**3.3V**	2.0	—	V_{DD} + 0.3	V
V_{IL}	Input Low Voltage	**3.3V**	–0.3	—	0.8	V
T_A	Commercial Ambient Temperature Industrial Ambient Temperature		0 –40	— —	70 85	°C °C

CAPACITANCE(1,2)

Symbol	Parameter	Max.	Unit
C_{IN1}	Input Capacitance: A0-A9	5	pF
C_{IN2}	Input Capacitance: $\overline{RAS}$, $\overline{UCAS}$, $\overline{LCAS}$, $\overline{WE}$, $\overline{OE}$	7	pF
C_{IO}	Data Input/Output Capacitance: I/O0-I/O15	7	pF

Notes:
1. Tested initially and after any design or process changes that may affect these parameters.
2. Test conditions: T_A = 25°C, f = 1 MHz.

ELECTRICAL CHARACTERISTICS[1]

(Recommended Operating Conditions unless otherwise noted.)

Symbol	Parameter	Test Condition	Speed	Min.	Max.	Unit
I_{IL}	Input Leakage Current	Any input 0V ≤ V_{IN} ≤ V_{DD} Other inputs not under test = 0V		–10	10	µA
I_{IO}	Output Leakage Current	Output is disabled (Hi-Z) 0V ≤ V_{OUT} ≤ V_{DD}		–10	10	µA
V_{OH}	Output High Voltage Level	I_{OH} = –2.0 mA (3.3V)		2.4	—	V
V_{OL}	Output Low Voltage Level	I_{OL} = 2.0 mA (3.3V)		—	0.4	V
I_{CC1}	Standby Current: TTL	$\overline{RAS}$, $\overline{LCAS}$, $\overline{UCAS}$ ≥ V_{IH} Commercial	3.3V	—	3	mA
		Industrial	3.3V	—	4	mA
I_{CC2}	Standby Current: CMOS	$\overline{RAS}$, $\overline{LCAS}$, $\overline{UCAS}$ ≥ V_{DD} – 0.2V	3.3V	—	2	mA
I_{CC3}	Operating Current: Random Read/Write[2,3,4] Average Power Supply Current	$\overline{RAS}$, $\overline{LCAS}$, $\overline{UCAS}$, Address Cycling, t_{RC} = t_{RC} (min.)	-50 -60	— —	180 170	mA
I_{CC4}	Operating Current: EDO Page Mode[2,3,4] Average Power Supply Current	$\overline{RAS}$ = V_{IL}, $\overline{LCAS}$, $\overline{UCAS}$, Cycling t_{PC} = t_{PC} (min.)	-50 -60	— —	180 170	mA
I_{CC5}	Refresh Current: $\overline{RAS}$-Only[2,3] Average Power Supply Current	$\overline{RAS}$ Cycling, $\overline{LCAS}$, $\overline{UCAS}$ ≥ V_{IH} t_{RC} = t_{RC} (min.)	-50 -60	— —	180 170	mA
I_{CC6}	Refresh Current: CBR[2,3,5] Average Power Supply Current	$\overline{RAS}$, $\overline{LCAS}$, $\overline{UCAS}$ Cycling t_{RC} = t_{RC} (min.)	-50 -60	— —	180 170	mA

Notes:
1. An initial pause of 200 µs is required after power-up followed by eight $\overline{RAS}$ refresh cycles ($\overline{RAS}$-Only or CBR) before proper device operation is assured. The eight $\overline{RAS}$ cycles wake-up should be repeated any time the t_{REF} refresh requirement is exceeded.
2. Dependent on cycle rates.
3. Specified values are obtained with minimum cycle time and the output open.
4. Column-address is changed once each EDO page cycle.
5. Enables on-chip refresh and address counters.

AC CHARACTERISTICS(1,2,3,4,5,6)

(Recommended Operating Conditions unless otherwise noted.)

Symbol	Parameter	-50 Min.	-50 Max.	-60 Min.	-60 Max.	Units
t_{RC}	Random READ or WRITE Cycle Time	85	—	110	—	ns
t_{RAC}	Access Time from $\overline{RAS}$(6, 7)	—	50	—	60	ns
t_{CAC}	Access Time from $\overline{CAS}$(6, 8, 15)	—	14	—	15	ns
t_{AA}	Access Time from Column-Address(6)	—	25	—	30	ns
t_{RAS}	$\overline{RAS}$ Pulse Width	50	10K	60	10K	ns
t_{RP}	$\overline{RAS}$ Precharge Time	30	—	40	—	ns
t_{CAS}	$\overline{CAS}$ Pulse Width(26)	8	10K	10	10K	ns
t_{CP}	$\overline{CAS}$ Precharge Time(9, 25)	9	—	10	—	ns
t_{CSH}	$\overline{CAS}$ Hold Time (21)	50	—	60	—	ns
t_{RCD}	$\overline{RAS}$ to $\overline{CAS}$ Delay Time(10, 20)	12	37	20	45	ns
t_{ASR}	Row-Address Setup Time	0	—	0	—	ns
t_{RAH}	Row-Address Hold Time	8	—	10	—	ns
t_{ASC}	Column-Address Setup Time(20)	0	—	0	—	ns
t_{CAH}	Column-Address Hold Time(20)	8	—	10	—	ns
t_{AR}	Column-Address Hold Time (referenced to $\overline{RAS}$)	30	—	40	—	ns
t_{RAD}	$\overline{RAS}$ to Column-Address Delay Time(11)	14	25	15	30	ns
t_{RAL}	Column-Address to $\overline{RAS}$ Lead Time	25	—	30	—	ns
t_{RPC}	$\overline{RAS}$ to $\overline{CAS}$ Precharge Time	5	—	5	—	ns
t_{RSH}	$\overline{RAS}$ Hold Time(27)	14	—	15	—	ns
t_{CLZ}	$\overline{CAS}$ to Output in Low-Z(15, 29)	0	—	0	—	ns
t_{CRP}	$\overline{CAS}$ to $\overline{RAS}$ Precharge Time(21)	5	—	5	—	ns
t_{OD}	Output Disable Time(19, 28, 29)	3	12	3	12	ns
t_{OE}/t_{OEA}	Output Enable Time(15, 16)	—	14	—	15	ns
t_{OEHC}	$\overline{OE}$ HIGH Hold Time from $\overline{CAS}$ HIGH	15	—	15	—	ns
t_{OEP}	$\overline{OE}$ HIGH Pulse Width	10	—	10	—	ns
t_{OES}	$\overline{OE}$ LOW to $\overline{CAS}$ HIGH Setup Time	5	—	5	—	ns
t_{RCS}	Read Command Setup Time(17, 20)	0	—	0	—	ns
t_{RRH}	Read Command Hold Time (referenced to $\overline{RAS}$)(12)	0	—	0	—	ns
t_{RCH}	Read Command Hold Time (referenced to $\overline{CAS}$)(12, 17, 21)	0	—	0	—	ns
t_{WCH}	Write Command Hold Time(17, 27)	8	—	10	—	ns
t_{WCR}	Write Command Hold Time (referenced to $\overline{RAS}$)(17)	40	—	50	—	ns

AC CHARACTERISTICS (Continued)[1,2,3,4,5,6]

(Recommended Operating Conditions unless otherwise noted.)

Symbol	Parameter	-50 Min.	-50 Max.	-60 Min.	-60 Max.	Units
t_{WP}	Write Command Pulse Width[17]	8	—	10	—	ns
t_{WPZ}	$\overline{WE}$ Pulse Widths to Disable Outputs	10	—	10	—	ns
t_{RWL}	Write Command to $\overline{RAS}$ Lead Time[17]	13	—	15	—	ns
t_{CWL}	Write Command to $\overline{CAS}$ Lead Time[17, 21]	8	—	15	—	ns
t_{WCS}	Write Command Setup Time[14, 17, 20]	0	—	0	—	ns
t_{DHR}	Data-in Hold Time (referenced to $\overline{RAS}$)	39	—	40	—	ns
t_{OEH}	$\overline{OE}$ Hold Time from $\overline{WE}$ during READ-MODIFY-WRITE cycle[18]	14	—	15	—	ns
t_{DS}	Data-In Setup Time[15, 22]	0	—	0	—	ns
t_{DH}	Data-In Hold Time[15, 22]	8	—	15	—	ns
t_{RWC}	READ-MODIFY-WRITE Cycle Time	110	—	155	—	ns
t_{RWD}	$\overline{RAS}$ to $\overline{WE}$ Delay Time during READ-MODIFY-WRITE Cycle[14]	65	—	85	—	ns
t_{CWD}	$\overline{CAS}$ to $\overline{WE}$ Delay Time[14, 20]	26	—	40	—	ns
t_{AWD}	Column-Address to $\overline{WE}$ Delay Time[14]	40	—	55	—	ns
t_{PC}	EDO Page Mode READ or WRITE Cycle Time[24]	30	—	40	—	ns
t_{RASP}	$\overline{RAS}$ Pulse Width in EDO Page Mode	50	100K	60	100K	ns
t_{CPA}	Access Time from $\overline{CAS}$ Precharge[15]	—	30	—	35	ns
t_{PRWC}	EDO Page Mode READ-WRITE Cycle Time[24]	56	—	56	—	ns
t_{COH}	Data Output Hold after $\overline{CAS}$ LOW	5	—	5	—	ns
t_{OFF}	Output Buffer Turn-Off Delay from $\overline{CAS}$ or $\overline{RAS}$[13,15,19, 29]	3	12	3	15	ns
t_{WHZ}	Output Disable Delay from $\overline{WE}$	3	10	3	15	ns
t_{CLCH}	Last $\overline{CAS}$ going LOW to First $\overline{CAS}$ returning HIGH[23]	10	—	10	—	ns
t_{CSR}	$\overline{CAS}$ Setup Time (CBR REFRESH)[30, 20]	5	—	5	—	ns
t_{CHR}	$\overline{CAS}$ Hold Time (CBR REFRESH)[30, 21]	8	—	10	—	ns
t_{ORD}	$\overline{OE}$ Setup Time prior to $\overline{RAS}$ during HIDDEN REFRESH Cycle	0	—	0	—	ns
t_{REF}	Auto Refresh Period (1,024 Cycles)	—	16	—	16	ms
t_{REF}	Self Refresh Period (1,024 Cycles)	—	128	—	128	ms
t_T	Transition Time (Rise or Fall)[2, 3]	3	50	3	50	ns

AC TEST CONDITIONS

Output load: One TTL Load and 50 pF (V_{DD} = 3.3V ±10%)

Input timing reference levels: V_{IH} = 2.0V, V_{IL} = 0.8V (V_{DD} = 3.3V ±10%)

Output timing reference levels: V_{OH} = 2.0V, V_{OL} = 0.8V

Notes:

1. An initial pause of 200 µs is required after power-up followed by eight $\overline{RAS}$ refresh cycle ($\overline{RAS}$-Only or CBR) before proper device operation is assured. The eight $\overline{RAS}$ cycles wake-up should be repeated any time the t_{REF} refresh requirement is exceeded.
2. V_{IH} (MIN) and V_{IL} (MAX) are reference levels for measuring timing of input signals. Transition times, are measured between V_{IH} and V_{IL} (or between V_{IL} and V_{IH}) and assume to be 1 ns for all inputs.
3. In addition to meeting the transition rate specification, all input signals must transit between V_{IH} and V_{IL} (or between V_{IL} and V_{IH}) in a monotonic manner.
4. If $\overline{CAS}$ and $\overline{RAS}$ = V_{IH}, data output is High-Z.
5. If $\overline{CAS}$ = V_{IL}, data output may contain data from the last valid READ cycle.
6. Measured with a load equivalent to one TTL gate and 50 pF.
7. Assumes that $t_{RCD} \leq t_{RCD}$ (MAX). If t_{RCD} is greater than the maximum recommended value shown in this table, t_{RAC} will increase by the amount that t_{RCD} exceeds the value shown.
8. Assumes that $t_{RCD} \leq t_{RCD}$ (MAX).
9. If $\overline{CAS}$ is LOW at the falling edge of $\overline{RAS}$, data out will be maintained from the previous cycle. To initiate a new cycle and clear the data output buffer, $\overline{CAS}$ and $\overline{RAS}$ must be pulsed for t_{CP}.
10. Operation with the t_{RCD} (MAX) limit ensures that t_{RAC} (MAX) can be met. t_{RCD} (MAX) is specified as a reference point only; if t_{RCD} is greater than the specified t_{RCD} (MAX) limit, access time is controlled exclusively by t_{CAC}.
11. Operation within the t_{RAD} (MAX) limit ensures that t_{RCD} (MAX) can be met. t_{RAD} (MAX) is specified as a reference point only; if t_{RAD} is greater than the specified t_{RAD} (MAX) limit, access time is controlled exclusively by t_{AA}.
12. Either t_{RCH} or t_{RRH} must be satisfied for a READ cycle.
13. t_{OFF} (MAX) defines the time at which the output achieves the open circuit condition; it is not a reference to V_{OH} or V_{OL}.
14. t_{WCS}, t_{RWD}, t_{AWD} and t_{CWD} are restrictive operating parameters in LATE WRITE and READ-MODIFY-WRITE cycle only. If $t_{WCS} \leq t_{WCS}$ (MIN), the cycle is an EARLY WRITE cycle and the data output will remain open circuit throughout the entire cycle. If $t_{RWD} \leq t_{RWD}$ (MIN), $t_{AWD} \leq t_{AWD}$ (MIN) and $t_{CWD} \leq t_{CWD}$ (MIN), the cycle is a READ-WRITE cycle and the data output will contain data read from the selected cell. If neither of the above conditions is met, the state of I/O (at access time and until $\overline{CAS}$ and $\overline{RAS}$ or $\overline{OE}$ go back to V_{IH}) is indeterminate. $\overline{OE}$ held HIGH and $\overline{WE}$ taken LOW after $\overline{CAS}$ goes LOW result in a LATE WRITE ($\overline{OE}$-controlled) cycle.
15. Output parameter (I/O) is referenced to corresponding $\overline{CAS}$ input, I/O0-I/O7 by $\overline{LCAS}$ and I/O8-I/O15 by $\overline{UCAS}$.
16. During a READ cycle, if $\overline{OE}$ is LOW then taken HIGH before $\overline{CAS}$ goes HIGH, I/O goes open. If $\overline{OE}$ is tied permanently LOW, a LATE WRITE or READ-MODIFY-WRITE is not possible.
17. Write command is defined as $\overline{WE}$ going low.
18. LATE WRITE and READ-MODIFY-WRITE cycles must have both t_{OD} and t_{OEH} met ($\overline{OE}$ HIGH during WRITE cycle) in order to ensure that the output buffers will be open during the WRITE cycle. The I/Os will provide the previously written data if $\overline{CAS}$ remains LOW and $\overline{OE}$ is taken back to LOW after t_{OEH} is met.
19. The I/Os are in open during READ cycles once t_{OD} or t_{OFF} occur.
20. The first $\chi\overline{CAS}$ edge to transition LOW.
21. The last $\chi\overline{CAS}$ edge to transition HIGH.
22. These parameters are referenced to $\overline{CAS}$ leading edge in EARLY WRITE cycles and $\overline{WE}$ leading edge in LATE WRITE or READ-MODIFY-WRITE cycles.
23. Last falling $\chi\overline{CAS}$ edge to first rising $\chi\overline{CAS}$ edge.
24. Last rising $\chi\overline{CAS}$ edge to next cycle's last rising $\chi\overline{CAS}$ edge.
25. Last rising $\chi\overline{CAS}$ edge to first falling $\chi\overline{CAS}$ edge.
26. Each $\chi\overline{CAS}$ must meet minimum pulse width.
27. Last $\chi\overline{CAS}$ to go LOW.
28. I/Os controlled, regardless $\overline{UCAS}$ and $\overline{LCAS}$.
29. The 3 ns minimum is a parameter guaranteed by design.
30. Enables on-chip refresh and address counters.

READ CYCLE

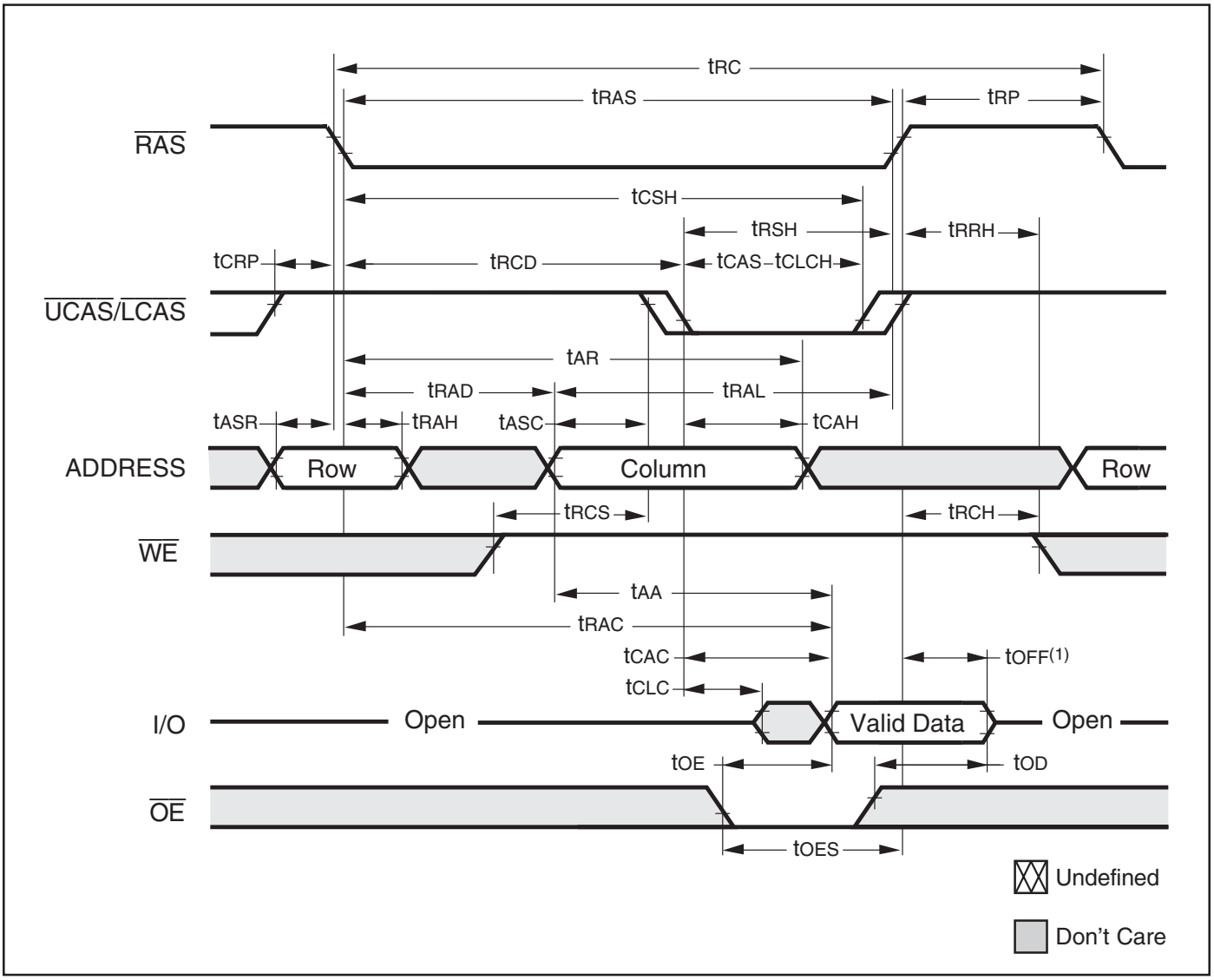

Note:
1. tOFF is referenced from rising edge of **RAS** or **CAS**, whichever occurs last.

EARLY WRITE CYCLE ($\overline{OE}$ = DON'T CARE)

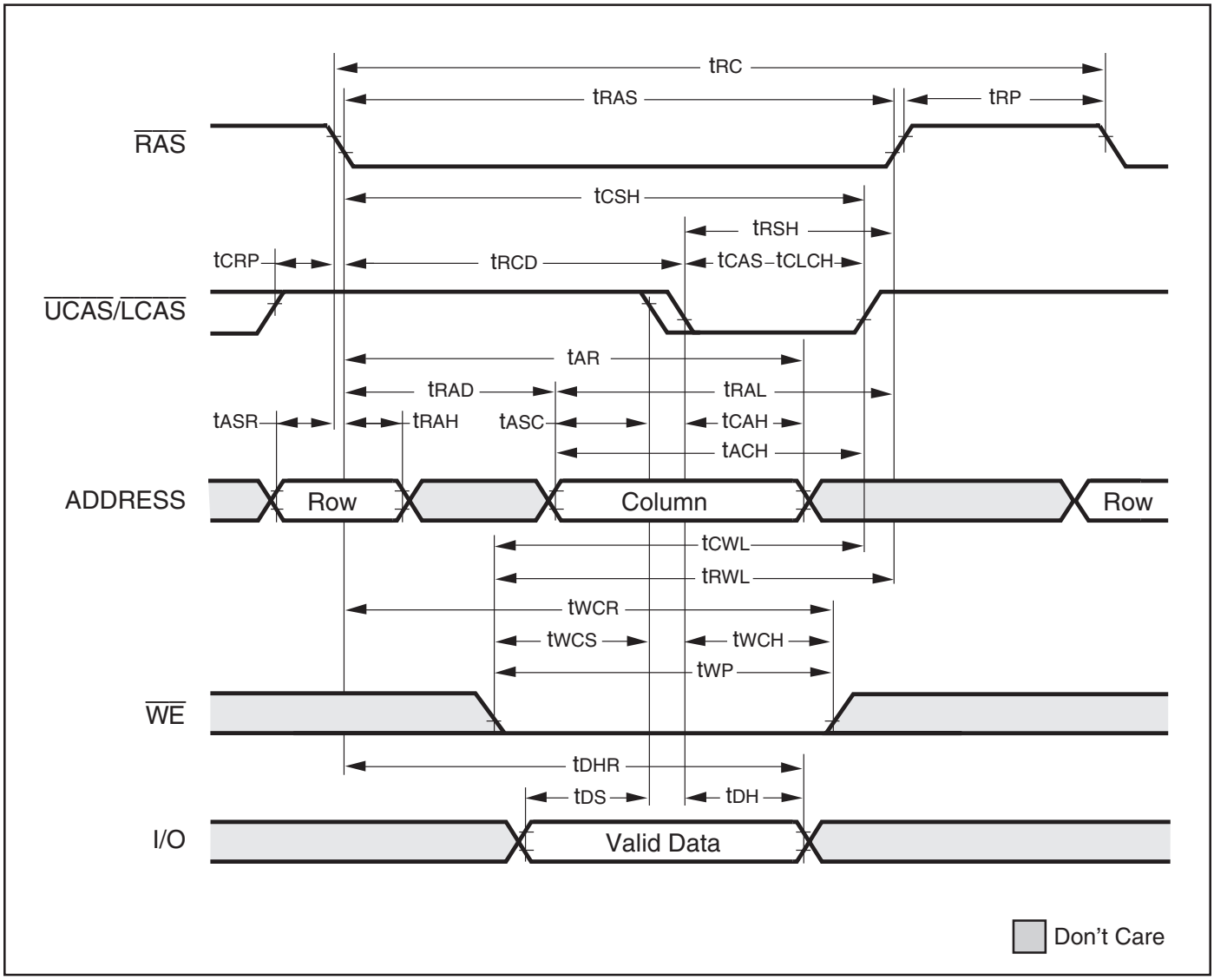

READ WRITE CYCLE (LATE WRITE and READ-MODIFY-WRITE Cycles)

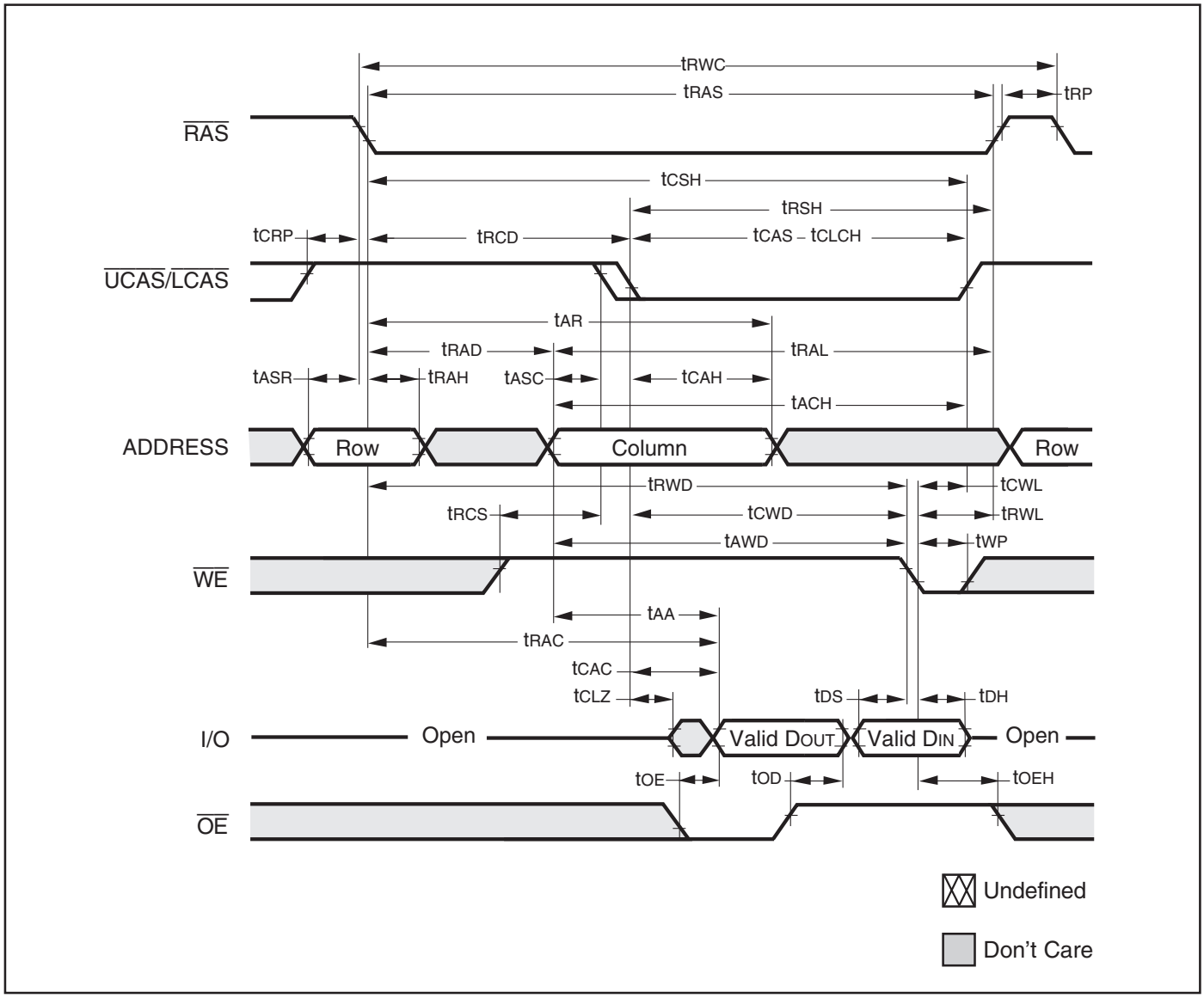

EDO-PAGE-MODE READ CYCLE

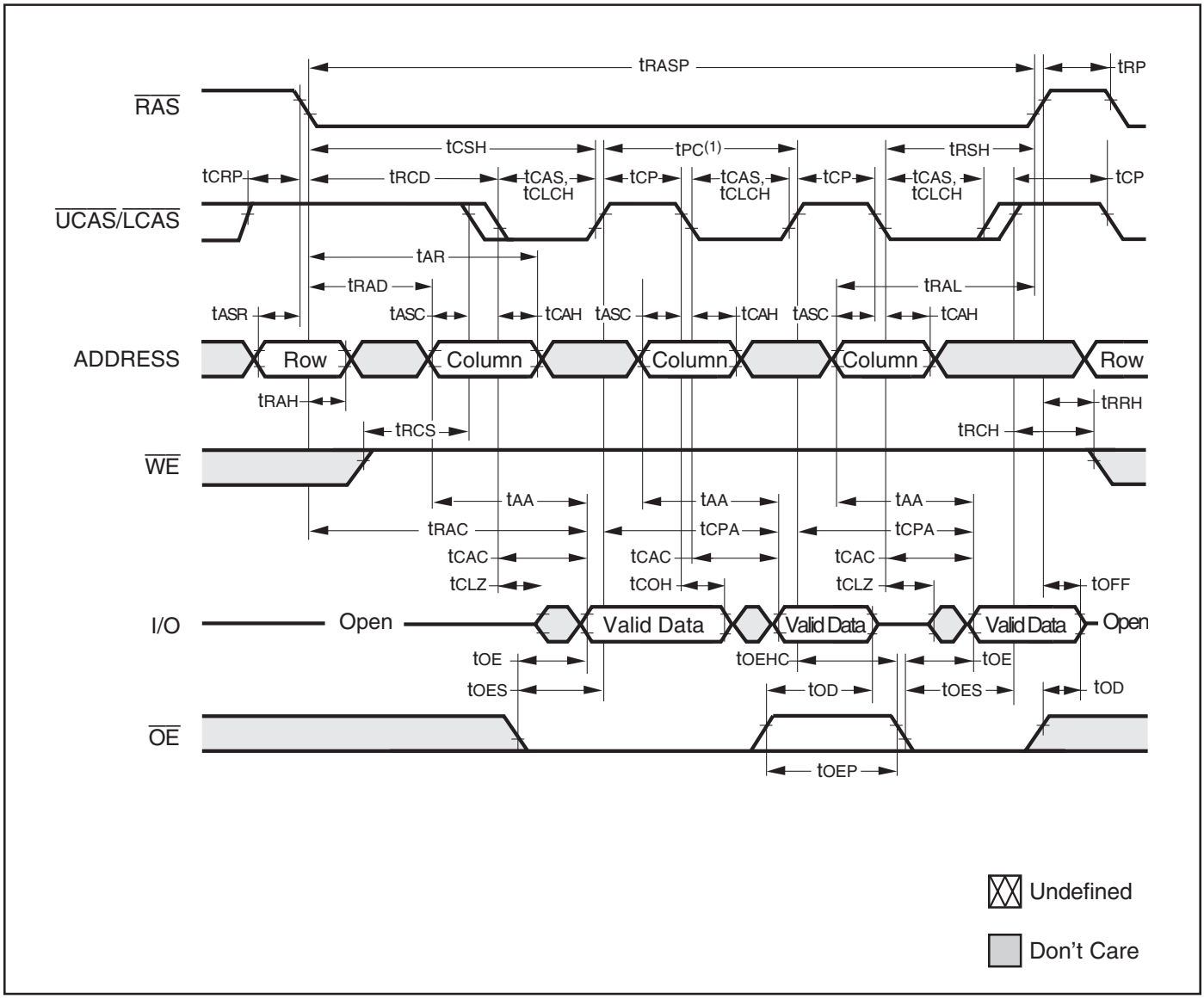

Note:

1. t_{PC} can be measured from falling edge of **CAS** to falling edge of **CAS**, or from rising edge of **CAS** to rising edge of **CAS**. Both measurements must meet the t_{PC} specifications.

EDO-PAGE-MODE EARLY-WRITE CYCLE

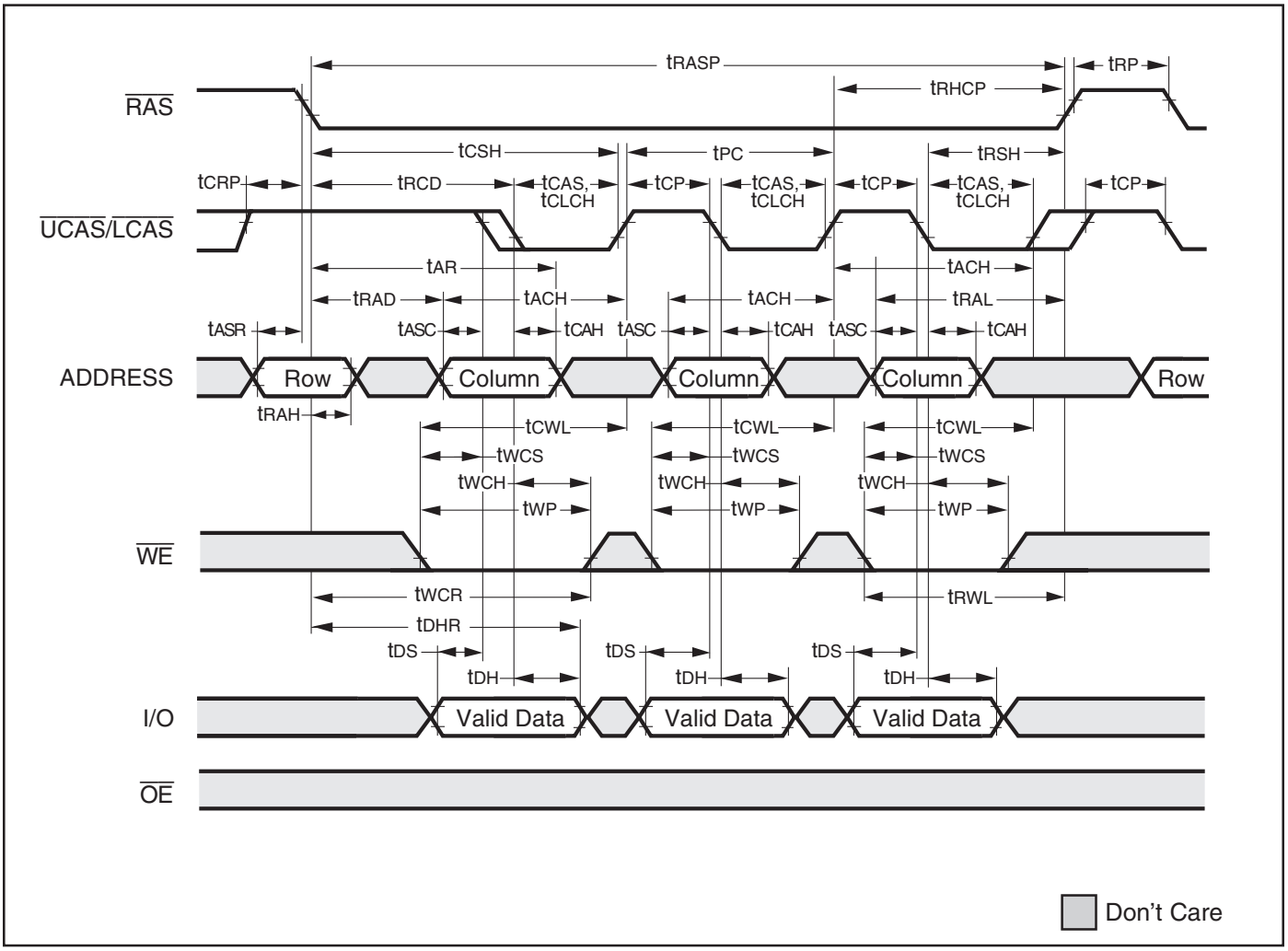

EDO-PAGE-MODE READ-WRITE CYCLE (LATE WRITE and READ-MODIFY WRITE Cycles)

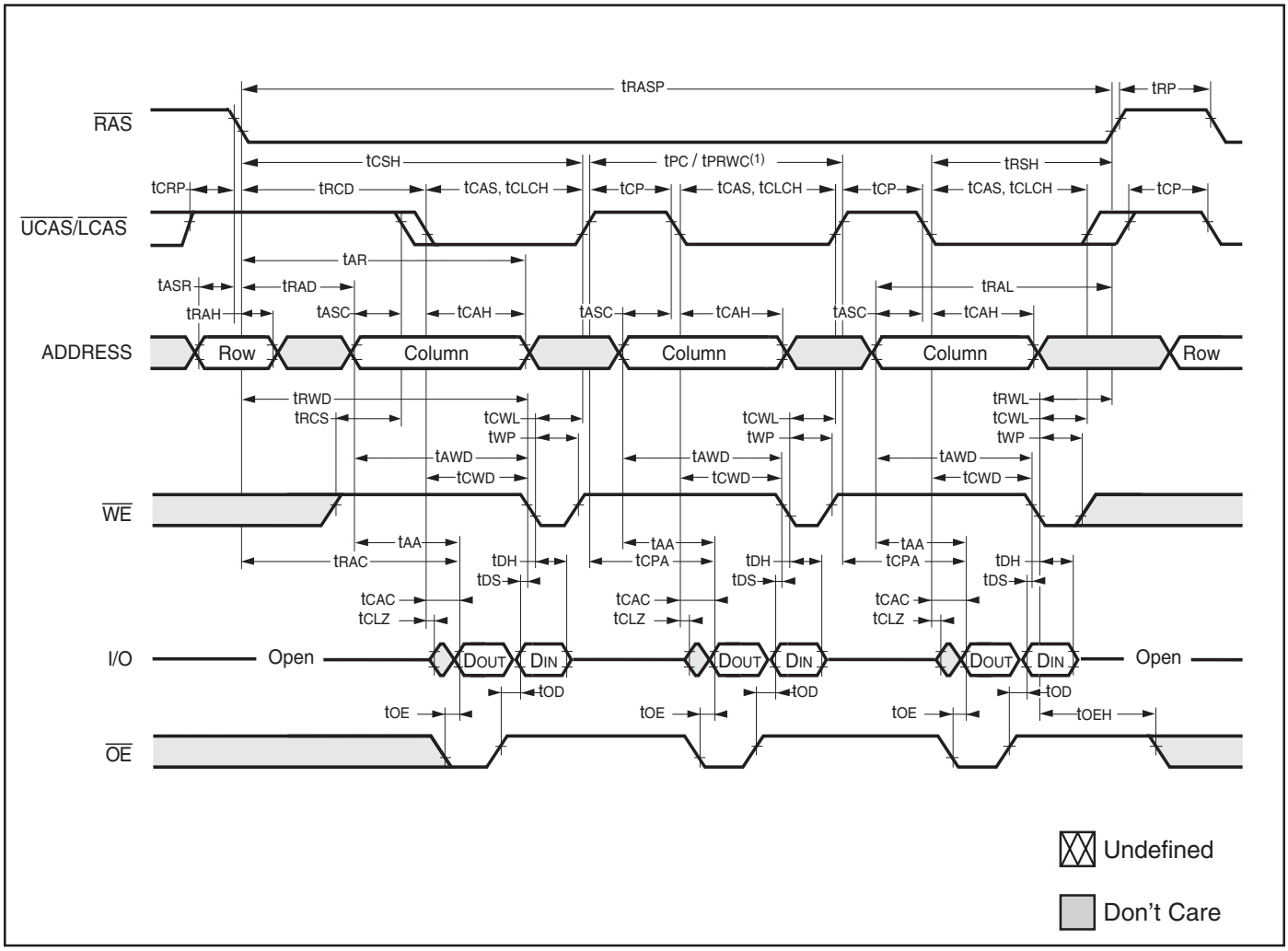

Note:

1. tPC can be measured from falling edge of $\overline{CAS}$ to falling edge of $\overline{CAS}$, or from rising edge of $\overline{CAS}$ to rising edge of $\overline{CAS}$. Both measurements must meet the tPC specifications.

EDO-PAGE-MODE READ-EARLY-WRITE CYCLE (Pseudo READ-MODIFY WRITE)

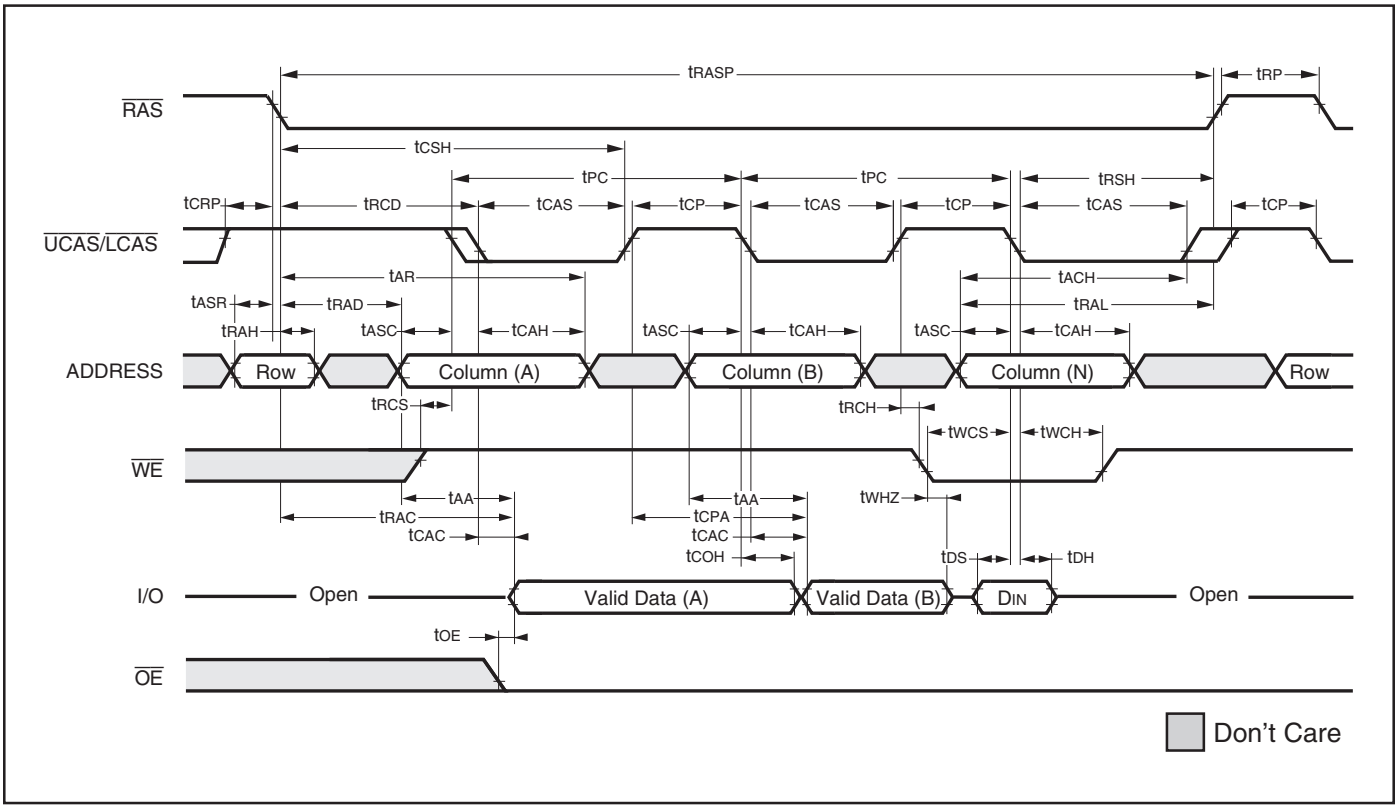

AC WAVEFORMS

READ CYCLE (With $\overline{WE}$-Controlled Disable)

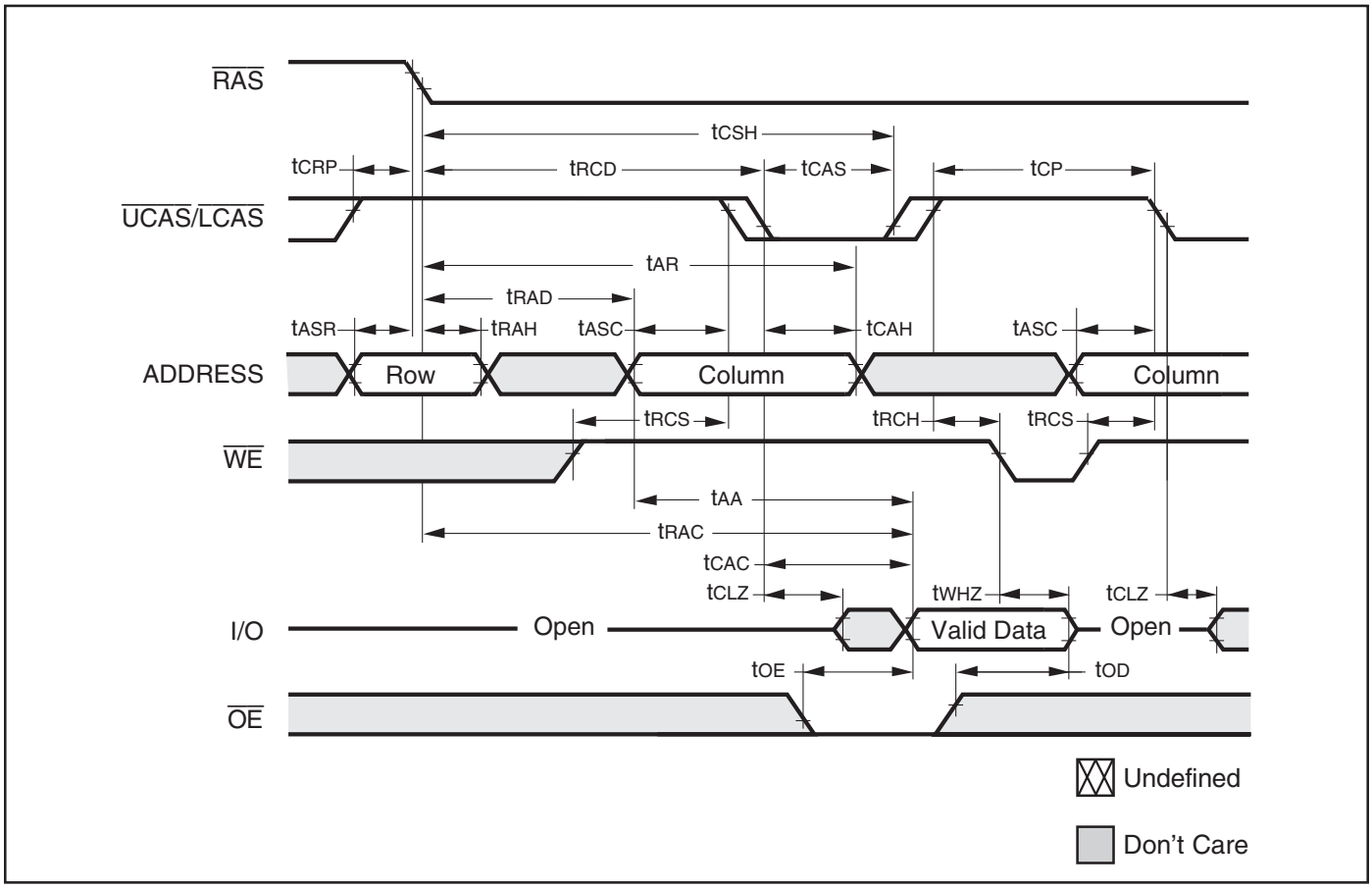

$\overline{RAS}$-ONLY REFRESH CYCLE ($\overline{OE}$, $\overline{WE}$ = DON'T CARE)

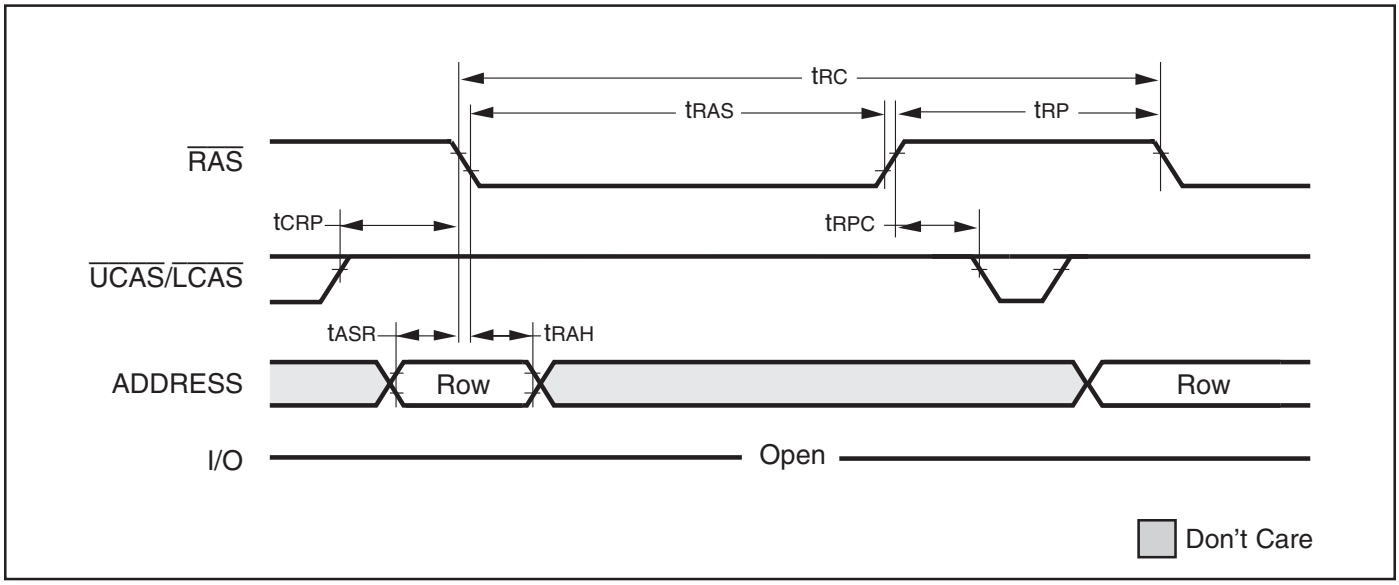

$\overline{CBR}$ REFRESH CYCLE (Addresses; $\overline{WE}$, $\overline{OE}$ = DON'T CARE)

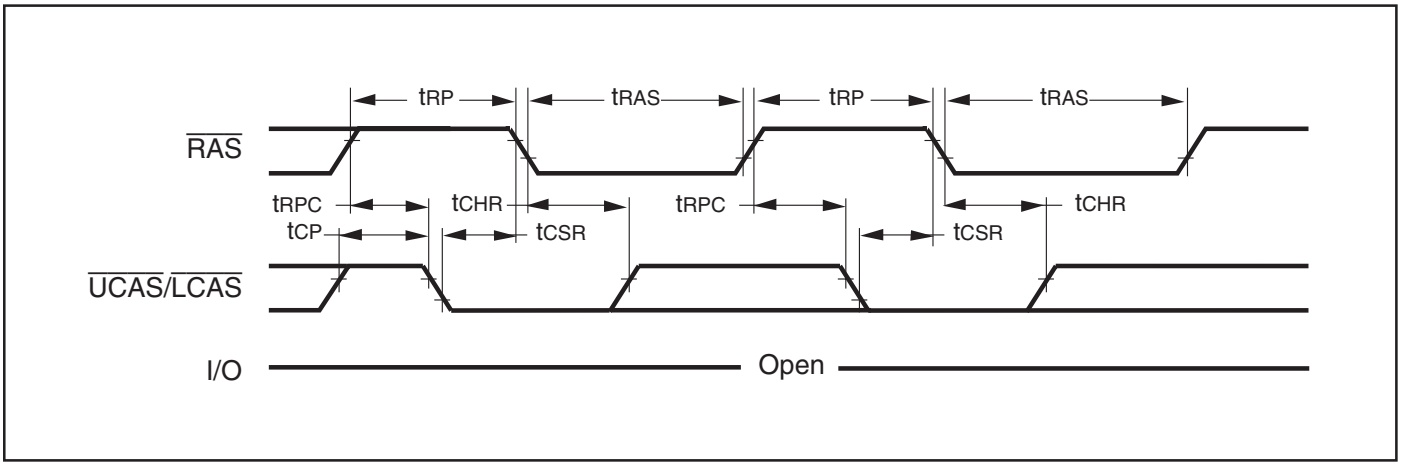

HIDDEN REFRESH CYCLE(1) ($\overline{WE}$ = HIGH; $\overline{OE}$ = LOW)

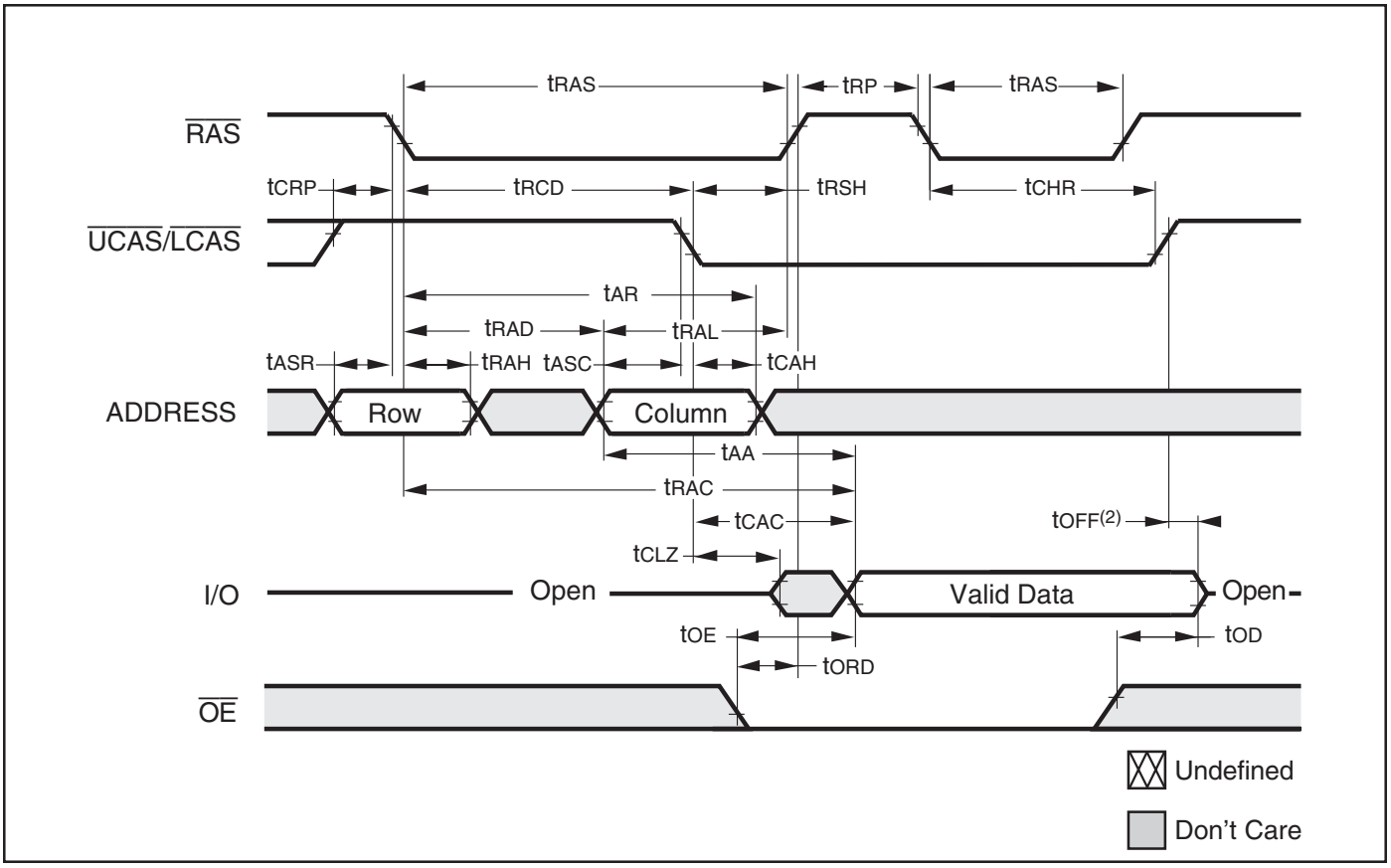

Notes:
1. A Hidden Refresh may also be performed after a Write Cycle. In this case, $\overline{WE}$ = LOW and $\overline{OE}$ = HIGH.
2. tOFF is referenced from rising edge of $\overline{RAS}$ or $\overline{CAS}$, whichever occurs last.

ORDERING INFORMATION : 3.3V

Commercial Range: 0°C to +70°C

Speed (ns)	Order Part No.	Package
50	IS41LV16100B-50K	400-mil SOJ
	IS41LV16100B-50KL	400-mil SOJ, Lead-free
	IS41LV16100B-50T	400-mil TSOP (Type II)
	IS41LV16100B-50TL	400-mil TSOP (Type II), Lead-free
60	IS41LV16100B-60K	400-mil SOJ
	IS41LV16100B-60KL	400-mil SOJ, Lead-free
	IS41LV16100B-60T	400-mil TSOP (Type II)
	IS41LV16100B-60TL	400-mil TSOP (Type II), Lead-free

Industrial Range: -40°C to +85°C

Speed (ns)	Order Part No.	Package
50	IS41LV16100B-50KI	400-mil SOJ
	IS41LV16100B-50KLI	400-mil SOJ, Lead-free
	IS41LV16100B-50TI	400-mil TSOP (Type II)
	IS41LV16100B-50TLI	400-mil TSOP (Type II), Lead-free
60	IS41LV16100B-60KI	400-mil SOJ
	IS41LV16100B-60KLI	400-mil SOJ, Lead-free
	IS41LV16100B-60TI	400-mil TSOP (Type II)
	IS41LV16100B-60TLI	400-mil TSOP (Type II), Lead-free

PACKAGING INFORMATION

ISSI®

400-mil Plastic SOJ
Package Code: K

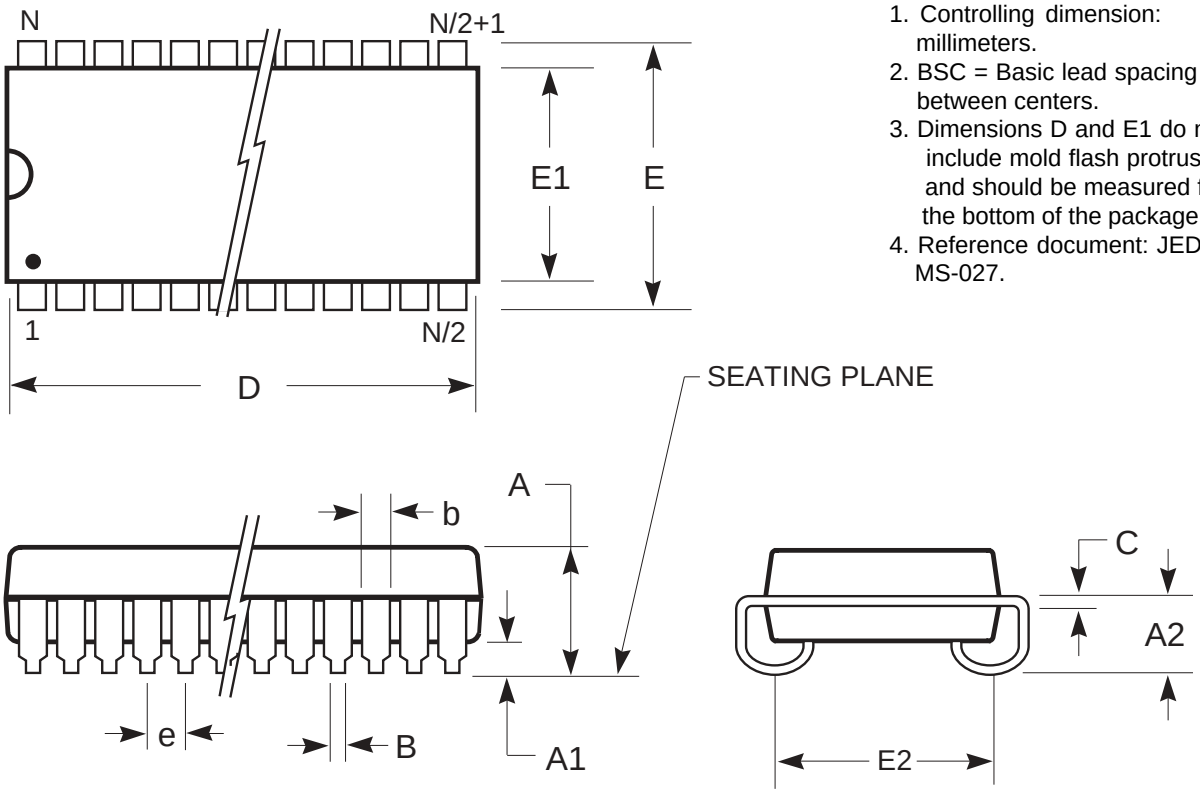

Notes:
1. Controlling dimension: millimeters.
2. BSC = Basic lead spacing between centers.
3. Dimensions D and E1 do not include mold flash protrusions and should be measured from the bottom of the package.
4. Reference document: JEDEC MS-027.

	Millimeters		Inches		Millimeters		Inches		Millimeters		Inches	
Symbol	**Min**	**Max**	**Min**	**Max**	**Min**	**Max**	**Min**	**Max**	**Min**	**Max**	**Min**	**Max**
No. Leads (N)	**28**				**32**				**36**			
A	3.25	3.75	0.128	0.148	3.25	3.75	0.128	0.148	3.25	3.75	0.128	0.148
A1	0.64	—	0.025	—	0.64	—	0.025	—	0.64	—	0.025	—
A2	2.08	—	0.082	—	2.08	—	0.082	—	2.08	—	0.082	—
B	0.38	0.51	0.015	0.020	0.38	0.51	0.015	0.020	0.38	0.51	0.015	0.020
b	0.66	0.81	0.026	0.032	0.66	0.81	0.026	0.032	0.66	0.81	0.026	0.032
C	0.18	0.33	0.007	0.013	0.18	0.33	0.007	0.013	0.18	0.33	0.007	0.013
D	18.29	18.54	0.720	0.730	20.82	21.08	0.820	0.830	23.37	23.62	0.920	0.930
E	11.05	11.30	0.435	0.445	11.05	11.30	0.435	0.445	11.05	11.30	0.435	0.445
E1	10.03	10.29	0.395	0.405	10.03	10.29	0.395	0.405	10.03	10.29	0.395	0.405
E2	9.40 BSC		0.370 BSC		9.40 BSC		0.370 BSC		9.40 BSC		0.370 BSC	
e	1.27 BSC		0.050 BSC		1.27 BSC		0.050 BSC		1.27 BSC		0.050 BSC	

Copyright © 2003 Integrated Silicon Solution, Inc. All rights reserved. ISSI reserves the right to make changes to this specification and its products at any time without notice. ISSI assumes no liability arising out of the application or use of any information, products or services described herein. Customers are advised to obtain the latest version of this device specification before relying on any published information and before placing orders for products.

	Millimeters		Inches		Millimeters		Inches		Millimeters		Inches	
Symbol	Min	Max	Min	Max	Min	Max	Min	Max	Min	Max	Min	Max
No. Leads (N)	40				42				44			
A	3.25	3.75	0.128	0.148	3.25	3.75	0.128	0.148	3.25	3.75	0.128	0.148
A1	0.64	—	0.025	—	0.64	—	0.025	—	0.64	—	0.025	—
A2	2.08	—	0.082	—	2.08	—	0.082	—	2.08	—	0.082	—
B	0.38	0.51	0.015	0.020	0.38	0.51	0.015	0.020	0.38	0.51	0.015	0.020
b	0.66	0.81	0.026	0.032	0.66	0.81	0.026	0.032	0.66	0.81	0.026	0.032
C	0.18	0.33	0.007	0.013	0.18	0.33	0.007	0.013	0.18	0.33	0.007	0.013
D	25.91	26.16	1.020	1.030	27.18	27.43	1.070	1.080	28.45	28.70	1.120	1.130
E	11.05	11.30	0.435	0.445	11.05	11.30	0.435	0.445	11.05	11.30	0.435	0.445
E1	10.03	10.29	0.395	0.405	10.03	10.29	0.395	0.405	10.03	10.29	0.395	0.405
E2	9.40 BSC		0.370 BSC		9.40 BSC		0.370 BSC		9.40 BSC		0.370 BSC	
e	1.27 BSC		0.050 BSC		1.27 BSC		0.050 BSC		1.27 BSC		0.050 BSC	

Copyright © 2003 Integrated Silicon Solution, Inc. All rights reserved. ISSI reserves the right to make changes to this specification and its products at any time without notice. ISSI assumes no liability arising out of the application or use of any information, products or services described herein. Customers are advised to obtain the latest version of this device specification before relying on any published information and before placing orders for products.

ISSI®

Plastic TSOP
Package Code: T (Type II)

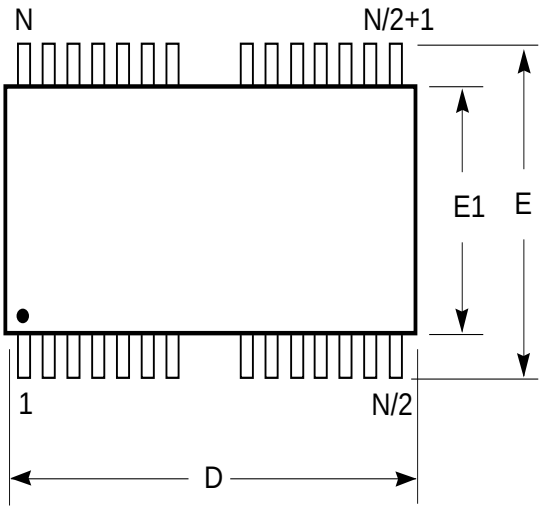

Notes:
1. Controlling dimension: millimeters, unless otherwise specified.
2. BSC = Basic lead spacing between centers.
3. Dimensions D1 and E do not include mold flash protrusions and should be measured from the bottom of the package.
4. Formed leads shall be planar with respect to one another within 0.004 inches at the seating plane.

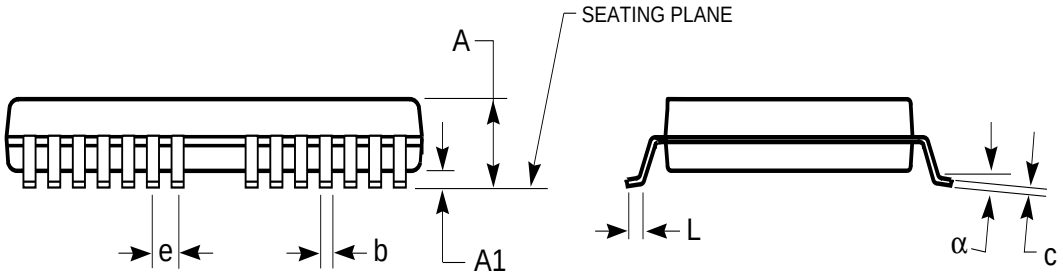

Plastic TSOP (T - Type II) (MS 25)				
	Millimeters		Inches	
Symbol	Min	Max	Min	Max
Ref. Std.				
N	24/26			
A		1.20		0.0472
A1	0.05	0.15	0.002	0.0059
b	0.30	0.51	0.012	0.0201
c	0.12	0.21	0.005	0.0083
D	17.01	17.27	0.670	0.6899
E_1	7.49	7.75	0.295	0.3051
e	1.27 BSC		0.050 BSC	
E	9.02	9.42	0.462	0.4701
L	0.40	0.60	0.016	0.0236
α	0°	5°	0°	5°

Plastic TSOP (T - Type II) (MS 24)				
	Millimeters		Inches	
Symbol	Min	Max	Min	Max
Ref. Std.				
N	40/44			
A		1.20		0.0472
A1	0.05	0.15	0.002	0.0059
b	0.30	0.45	0.012	0.0157
c	0.12	0.21	0.005	0.0083
D	18.31	18.51	0.721	0.7287
E_1	10.06	10.26	0.396	0.4040
e	0.80 BSC		0.031 BSC	
E	11.56	11.96	0.455	0.4709
L	0.40	0.60	0.016	0.0236
α	0°	8°	0°	8°

Plastic TSOP (T - Type II) (MS 24)				
	Millimeters		Inches	
Symbol	Min	Max	Min	Max
Ref. Std.				
N	44/50			
A		1.20		0.0472
A1	0.05	0.15	0.002	0.0059
b	0.30	0.45	0.012	0.0157
c	0.12	0.21	0.005	0.0083
D	20.85	21.05	0.821	0.8287
E_1	10.06	10.26	0.396	0.4040
e	0.80 BSC		0.031 BSC	
E	11.56	11.96	0.455	0.4709
L	0.40	0.60	0.016	0.0236
α	0°	8°	0°	8°

Общество с ограниченной ответственностью «МосЧип» ИНН 7719860671 / КПП 771901001
Адрес: 105318, г.Москва, ул.Щербаковская д.3, офис 1107

Данный компонент на территории Российской Федерации

Вы можете приобрести в компании MosChip.

Для оперативного оформления запроса Вам необходимо перейти по данной ссылке:

http://moschip.ru/get-element

Вы можете разместить у нас заказ для любого Вашего проекта, будь то серийное производство или разработка единичного прибора.

В нашем ассортименте представлены ведущие мировые производители активных и пассивных электронных компонентов.

Нашей специализацией является поставка электронной компонентной базы двойного назначения, продукции таких производителей как XILINX, Intel (ex.ALTERA), Vicor, Microchip, Texas Instruments, Analog Devices, Mini-Circuits, Amphenol, Glenair.

Сотрудничество с глобальными дистрибьюторами электронных компонентов, предоставляет возможность заказывать и получать с международных складов практически любой перечень компонентов в оптимальные для Вас сроки.

На всех этапах разработки и производства наши партнеры могут получить квалифицированную поддержку опытных инженеров.

Система менеджмента качества компании отвечает требованиям в соответствии с ГОСТ Р ИСО 9001, ГОСТ РВ 0015-002 и ЭС РД 009

Офис по работе с юридическими лицами:

105318, г.Москва, ул.Щербаковская д.3, офис 1107, 1118, ДЦ «Щербаковский»

Телефон: +7 495 668-12-70 (многоканальный)

Факс: +7 495 668-12-70 (доб.304)

E-mail: info@moschip.ru

Skype отдела продаж:
moschip.ru
moschip.ru_4
moschip.ru_6
moschip.ru_9