FineAdjust Applicator

Application Tooling Specification Sheet

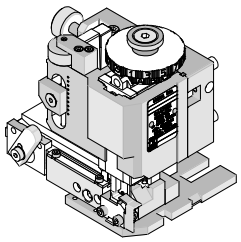

Order No. 63900-7600

FEATURES

- Directly adapts to most automatic wire processing machines
- Quick punch removal with the push of a button for fast and easy tooling change
- Applicator designed to industry standard mounting and shut height 135.80mm (5.346")
- Quick set-up time; plus the crimp height, track and feed adjustments can be set without removing the applicator from the press
- Fine adjustment allows users to achieve target with little effort by adjusting in increments of .015mm (.0006") for conductor crimp height and .063mm (.0025") for insulation height
- Independent adjustment rings allow users to quickly adjust the conductor or insulation crimp height without affecting each other

SCOPE

Products: 2.00mm (.079") Pitch Crimp Terminal, 22-28 AWG.

Terminal Series No.	Terminal Order No.	Wire Size		*Insulation Diameter		Strip Length	
		AWG	mm²	mm	In.	mm	In.
56086	56086-8000	22-28	0.34-0.08	0.85-1.50	.033-.059	1.60-2.10	.063-.083
59370	59370-8000	22-28	0.34-0.08	1.50 Maximum	.059 Maximum	1.60-2.10	.063-.083
* Note: 56086 - Insulation OD: 1.15-1.45mm will provide optimum A-620 crimps 59370 - Insulation OD: 1.10-1.50mm will provide optimum A-620 crimps							

DEFINITION OF TERMS

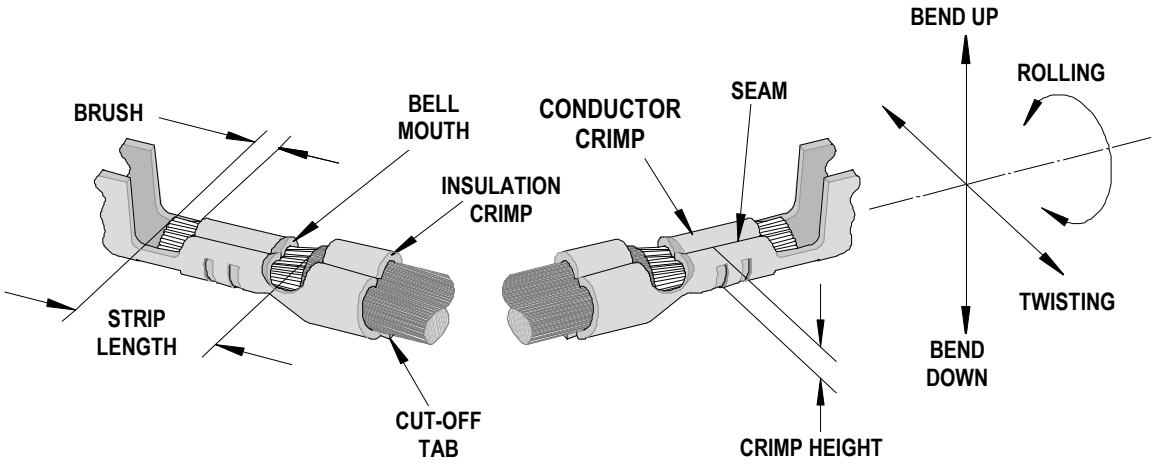

The above terminal drawing is a generic terminal representation. It is not an image of a terminal listed in the scope.

CRIMP SPECIFICATION

Terminal Series No.	Bell mouth		Cut-off Tab Maximum		Conductor Brush	
	Mm	In.	mm	In.	mm	In.
56086	0.05-0.30	.002-.012	0.25	.010	0.00-0.60	.000-.024
59370	0.05-0.30	.002-.012	0.25	.010	0.00-0.60	.000-.024

Terminal Series No.	Bend up	Bend down	Twist	Roll	Punch Width mm (Ref)				Seam
					Conductor		Insulation		
	Degree		Degree		mm	In	mm	In	
56086	4	2	3	8	1.20	.047	1.60	.063	Seam shall not be open and no wire allowed out of the crimping area
59370	3	3	3	6	1.20	.047	1.60	.063	

After crimping, the conductor profile should measure the following.

Terminal Series No.	Wire Size		Conductor Crimp Height		Insulation Crimp Height (Ref)		Pull Force Minimum	
	AWG	mm^2	mm	In.	mm	In.	N	Lb.
56086	22	0.34	0.84-0.89	.033-.035	2.05	.081	44.1	9.91
	24	0.20	0.76-0.81	.030-.032	2.00	.079	29.4	6.61
	26	0.12	0.71-0.76	.028-.030	1.90	.075	19.6	4.41
	28	0.08	0.67-0.72	.026-.028	1.75	.069	9.8	2.21
59370	22	0.34	0.70-0.75	.027-.029	1.75	.069	44.1	9.91
	24	0.20	0.67-0.72	.026-.028	1.70	.067	29.4	6.61
	26	0.12	0.61-0.66	.024-.026	1.60	.063	19.6	4.41
	28	0.08	0.57-0.62	.022-.024	1.35	.053	9.8	2.21

Tool Qualification Notes:

1. Pull Force should be measured with no influence from the insulation crimp.
2. The above specifications are guidelines to an optimum crimp.

PARTS LIST

FineAdjust Applicator 63900-7600				
Item	**Order No**	**Engineering No.**	**Description**	**Quantity**
Perishable Tooling				
	63900-7670	63900-7670	Tool Kit (All "Y" Items)	REF
1	63444-1207	63444-1207	Conductor Punch	1 Y
2	63445-1213	63445-1213	Conductor Anvil	1 Y
3	63446-1614	63446-1614	Insulation Punch	1 Y
4	63445-1624	63445-1624	Insulation Anvil	1 Y
5	63443-0002	63443-0002	Front Cut-Off Plunger	1 Y
6	63443-0012	63443-0012	Front Plunger Retainer	1 Y
Other Components				
7	11-18-4083	60707-8	Feed Guide	1
8	63443-0009	63443-0009	Front Scrap Chute	1
9	63443-0025	63443-0025	Key	1
10	63443-0090	63443-0090	Wire Stop	1
11	63443-1716	63443-1716	Height Spacer (18.60mm)	1
12	63443-2217	63443-2217	Coarse Spacer (17.00mm)	1
13	63443-2302	63443-2302	Fine Spacer (3.10mm)	1
14	63443-2802	63443-2802	Front Plunger Striker	1
15	63443-2906	63443-2906	Wire Hold Down Plunger	1
16	63443-6111	63443-6111	Rear Cover	1
17	63600-0021	63600-0021	Wire Hold Down Spring	1
18	63700-0539	63700-0539	Cut-Off Plunger Spring	1
Frame				
19	63800-4901	63800-4901	Top	1
20	63801-3281	63801-3281	Base	1
21	63801-4650	63801-4650	Track	1
Hardware				
22	N/A	N/A	M3 by 6 Long SHCS	2**
23	N/A	N/A	M3 by 6 Long FHCS	1**
24	N/A	N/A	M4 by 6 Long SHCS	2**
25	N/A	N/A	M4 by 12 Long BHCS	2**
26	N/A	N/A	M4 by 50 Long SHCS	2**
27	N/A	N/A	M5 by 12 Lg SHCS	1**
28	N/A	N/A	#10-32 by 3/8"Long Flat Point SSS	1**
29	N/A	N/A	#10-32 Hex Jam Nut	1**
** Available from an industrial supply company such as MSC (1-800-645-7270).				

Assembly Drawing

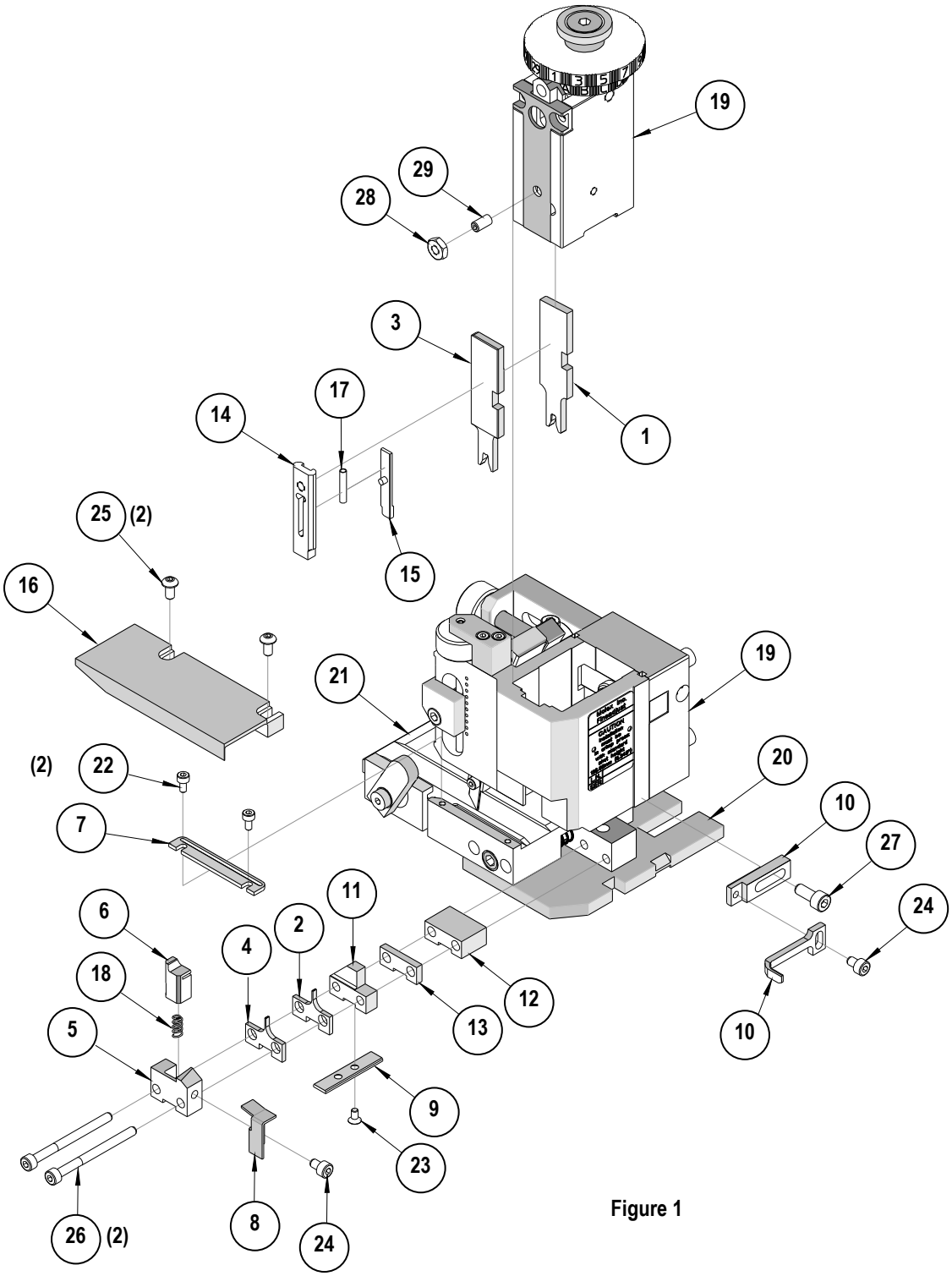

Figure 1

NOTES

1. Molex recommends an extra perishable tooling kit be maintained at your facility.
2. Verify tooling alignment by manually cycling the press and Applicator before crimping under power. Check that all screws are tight.
3. Slugs, Terminals, Dirt and Oil should be kept clear of work area.
4. Wear safety glasses at all times.
5. For recommended maintenance refer to the FineAdjust Manual.

CAUTION: This applicator should only be used in a press with a shut height of 135.8mm (5.346"). Tooling damage could result at a lower setting.

CAUTION: To prevent injury never operate this Applicator without the guards supplied with the press or wire-processing machine in place. Reference the press or wire processing manufacturer's instruction manual.

CAUTION: Molex crimp specifications are valid only when used with Molex terminals, applicators and tooling.

Visit our Web site at http://www.molex.com

Общество с ограниченной ответственностью «МосЧип» ИНН 7719860671 / КПП 771901001
Адрес: 105318, г.Москва, ул.Щербаковская д.3, офис 1107

Данный компонент на территории Российской Федерации

Вы можете приобрести в компании MosChip.

Для оперативного оформления запроса Вам необходимо перейти по данной ссылке:

http://moschip.ru/get-element

Вы можете разместить у нас заказ для любого Вашего проекта, будь то серийное производство или разработка единичного прибора.

В нашем ассортименте представлены ведущие мировые производители активных и пассивных электронных компонентов.

Нашей специализацией является поставка электронной компонентной базы двойного назначения, продукции таких производителей как XILINX, Intel (ex.ALTERA), Vicor, Microchip, Texas Instruments, Analog Devices, Mini-Circuits, Amphenol, Glenair.

Сотрудничество с глобальными дистрибьюторами электронных компонентов, предоставляет возможность заказывать и получать с международных складов практически любой перечень компонентов в оптимальные для Вас сроки.

На всех этапах разработки и производства наши партнеры могут получить квалифицированную поддержку опытных инженеров.

Система менеджмента качества компании отвечает требованиям в соответствии с ГОСТ Р ИСО 9001, ГОСТ РВ 0015-002 и ЭС РД 009

Офис по работе с юридическими лицами:

105318, г.Москва, ул.Щербаковская д.3, офис 1107, 1118, ДЦ «Щербаковский»

Телефон: +7 495 668-12-70 (многоканальный)

Факс: +7 495 668-12-70 (доб.304)

E-mail: info@moschip.ru

Skype отдела продаж:
moschip.ru
moschip.ru_4
moschip.ru_6
moschip.ru_9