National Semiconductor

PRELIMINARY
May 2001

FPD85308
Panel Timing Controller

General Description

The FPD85308 Panel Timing Controller is an integrated FPD-Link based TFT-LCD timing controller. It resides on the flat panel display and provides the interface signal routing and timing control between graphics or video controllers and a TFT-LCD system. FPD-Link is a low power, low electromagnetic interference interface used between this controller and the host system.

The FPD85308 chip links the panel's system interface to the LCD display via a ten wire LVDS data bus. The data is then routed to the source and gate display drivers. Both XGA and SVGA resolutions are supported.

The FPD85308 is programmable via an optional external serial EEPROM. Reserved space in the EEPROM is available for display identification information. The system can access the EEPROM to read the display identification data or program initialization values used by the FPD85308.

Features

- FPD-Link System Interface utilizes Low Voltage Differential Signaling (LVDS).
- Supports Graphics Controllers with Spread Spectrum interfaces for lower EMI
- System programmable via EEPROM
- Suitable for notebook and monitor applications
- 8-bit or 6-bit system interface
- XGA or SVGA capable
- Supports single or dual port column drivers
- Programmable outputs provide customized control for standard or in-house column drivers and row drivers
- Programmable slew rate controlled outputs on CD interface for reduced EMI
- Polarity pin reduces CD data bus switching
- CMOS circuitry operates from a 3.3V supply

System Diagram

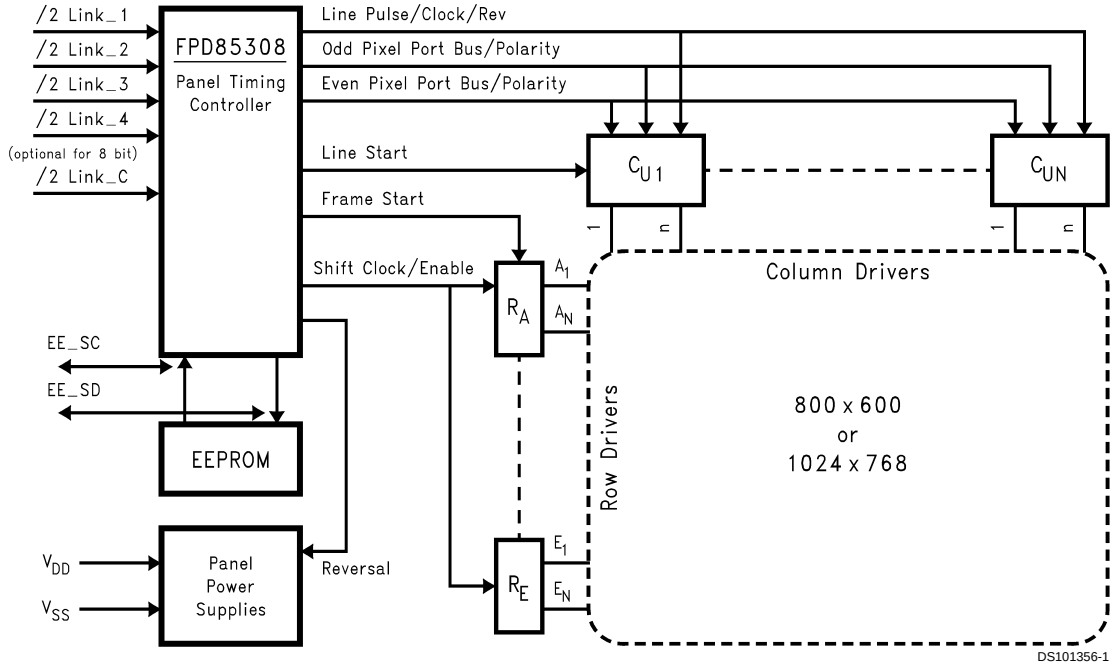

TRI-STATE® is a registered trademark of National Semiconductor Corporation.

© 2001 National Semiconductor Corporation

Absolute Maximum Ratings (Note 1)

If Military/Aerospace specified devices are required, please contact the National Semiconductor Sales Office/ Distributors for availability and specifications.

Supply Voltage (V_{DD})	4.0V
DC Input Voltage (V_{IN})	−0.3V to V_{DD} +0.3V
DC Output Voltage (V_{OUT})	−0.3V to V_{DD} +0.3V
Storage Temperature Range (T_{STG})	−65˚C to +150˚C
Lead Temperature (T_L) (Soldering 10 sec.)	260˚C
ESD Rating: (C_{ZAP} = 120 pF, R_{ZAP} = 1500Ω) MM = 200V, HBM = 2000V	

Operating Conditions

	Min	Max	Units
Supply Voltage (V_{DD})	3.0	3.6	V
Operating Temp. Range (T_A)	0	70	˚C
Supply Noise Voltage (V_{CC})		100	mV_{PP}

Note 1: "Absolute Maximum Ratings" are those values beyond which the safety of the device cannot be guaranteed. They are not meant to imply that the devices should be operated at these limits. The table of "Electrical Characteristics" specifies conditions of device operation.

DC Electrical Characteristics T_A = 0˚C to 70˚C, V_{DD} = 3.3V ± 0.3V (unless otherwise specified)

Symbol	Parameter	Conditions	Min	Max	Units
V_{OH}	Minimum High Level Output Voltage	V_{DD} = 3.0V, I_{OH} = -8 mA	2.4		V
V_{OL}	Maximum Low Level Output Voltage	V_{DD} = 3.0V, I_{OL} = 8 mA		0.4	V
V_{IH}	Minimum High Level Input Voltage		2.0		V
V_{IL}	Maximum Low Level Input Voltage			0.8	V
I_{IN}	Input Current	V_{IN} = V_{DD}		10	µA
I_{OZ}	Maximum TRI-STATE Output Leakage Current	V_{IN} = V_{DD}, V_{IN} = V_{SS}		10	µA
I_{DD}	Average Supply Current	f = 65 MHz, C_{LOAD} = 50 pF		312	mA
V_{THH}	Differential Input High Threshold	Common Mode Voltage = +1.2V		+100	mV
V_{THL}	Differential Input Low Threshold	Common Mode Voltage = +1.2V	-100		mV

Device Specifications T_A = 0˚C to 70˚C, V_{DD} = 3.3V (unless otherwise specified)

Symbol	Parameter	Conditions	Min	Max	Units
RPLLS	Receiver Phase Lock Loop Set Time			10	ms
RCCS	RxIN Channel-to-Channel Skew (Note 2)			700	ps

Note 2: This limit assumes a maximum cable skew of 350 ps. Actual automated test equipment limit is 400 ps due to tester accuracy.

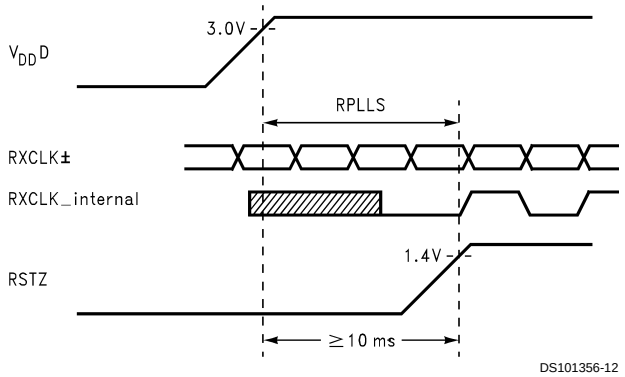

FIGURE 1. FPD85308 (Receiver) Phase Lock Loop Set Time

Device Specifications T_A = 0˚C to 70˚C, V_{DD} = 3.3V (unless otherwise specified) (Continued)

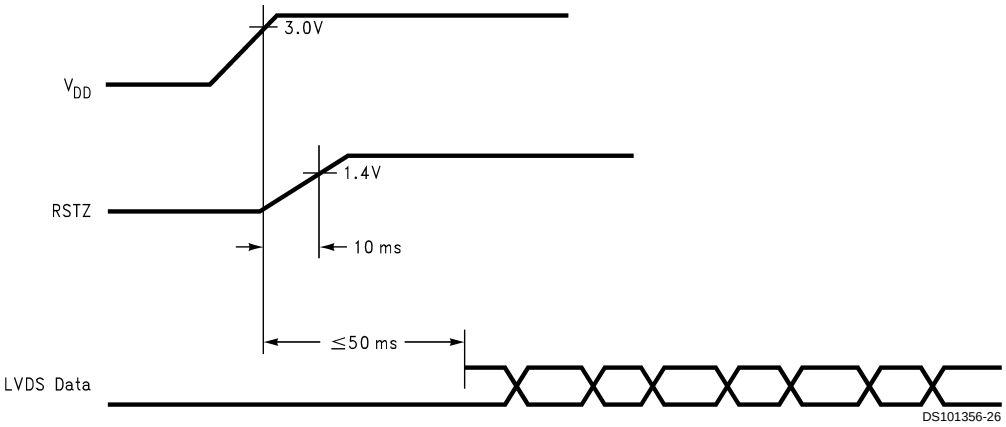

FIGURE 2. FPD85308 Power-up Sequencing

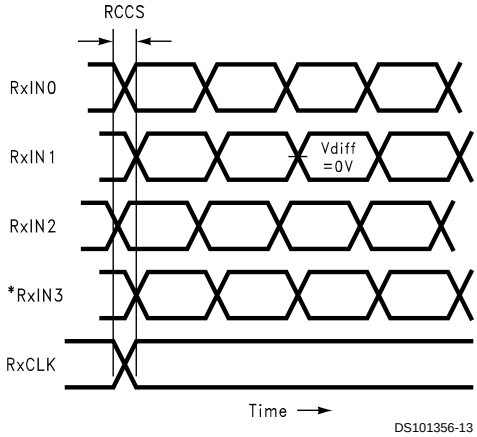

Note 3: Measurements at V_{DIFF} = 0V

Note 4: RCCS measured between earliest and latest LVDS edges

Note 5: *RxIN3 pair (RxIN_3±) is option for 24-bit color depth

FIGURE 3. FPD85308 (Receiver) Channel-to-Channel Skew and Pulse Width

Device Specifications T_A = 0˚C to 70˚C, V_{DD} = 3.3V (unless otherwise specified) (Continued)

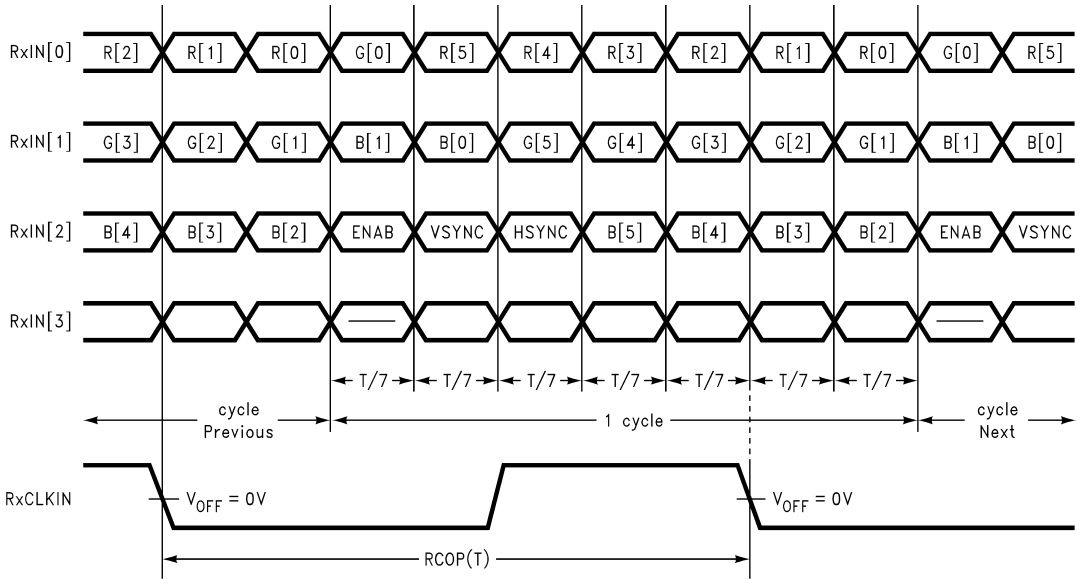

Note:

R/G/B[5] are MSBs and R/G/B[0] are LSBs

FIGURE 4. FPD85308-6 bit Input Mapping

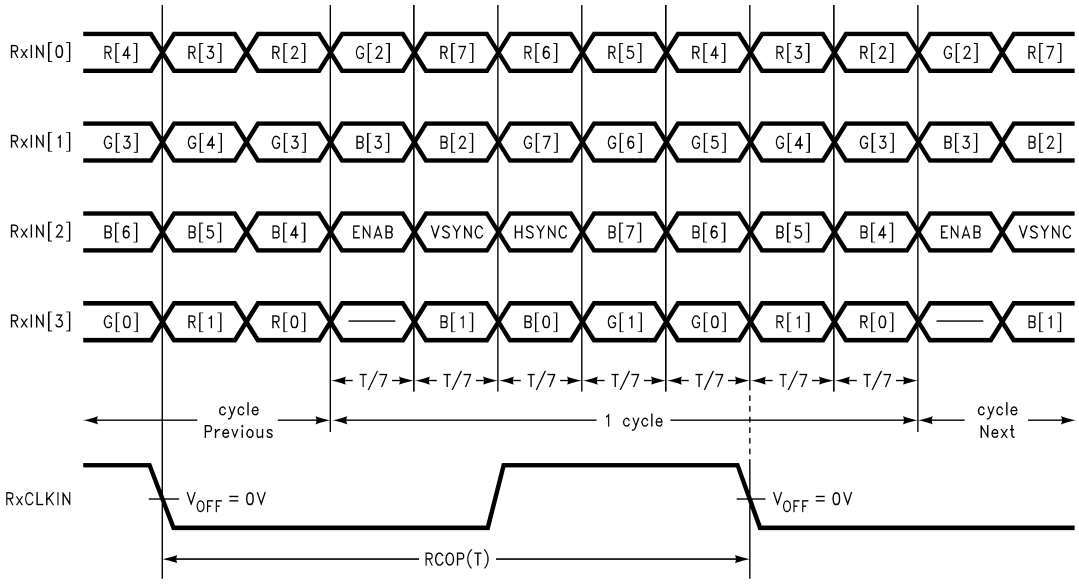

Note:

R/G/B[7] are MSBs and R/G/B[0] are LSBs

FIGURE 5. FPD85308-8 bit Input Mapping

Symbol	Parameter	Conditions	Min	Max	Units
SPsetup	E/OSP from E/OCLK	65 MHz Video (Note 6)	8		ns
SPhold	E/OSP from E/OCLK	65 MHz Video (Note 6)	8		ns
RGBsetup	ER/EG/EB/OR/OG/OB from E/OCLK	65 MHz Video (Note 6)	8		ns
RGBhold	ER/EG/EB/OR/OG/OB from E/OCLK	65 MHz Video (Note 6)	8		ns
CLKpw	E/OCLK pulsewidth	65 MHz Video (Note 6)	11		ns
CLKperiod	E/OCLK period	65 MHz Video (Note 6)	30		ns

Note 6: Timing applies to Dual Bus output modes.

Device Specifications T_A = 0˚C to 70˚C, V_{DD} = 3.3V (unless otherwise specified) (Continued)

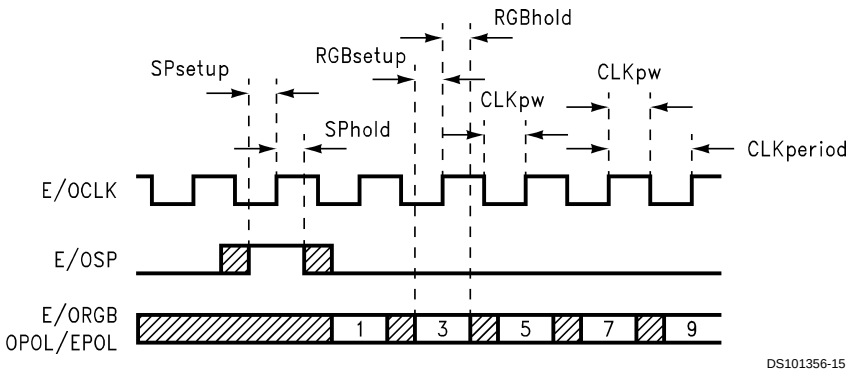

FIGURE 6. Column Driver Bus AC Timing

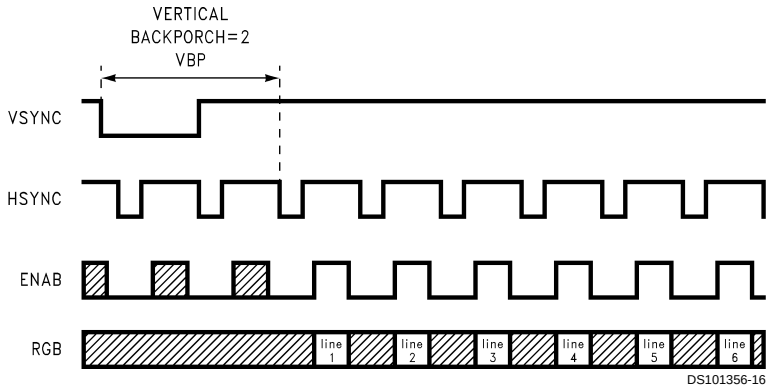

FIGURE 7. Vertical Backporch Definition (Video Data from Host)

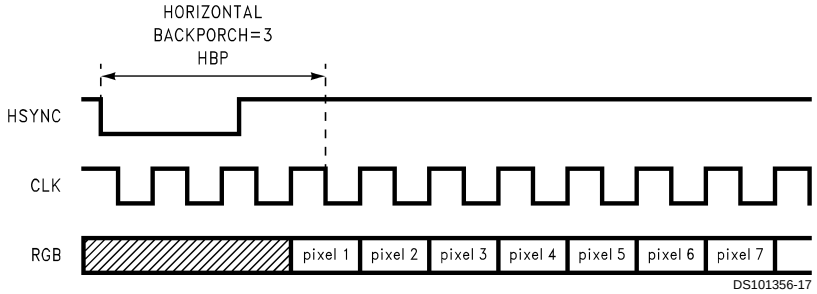

FIGURE 8. Horizontal Backporch Definition (Video Data from Host)

Device Specifications T_A = 0˚C to 70˚C, V_{DD} = 3.3V (unless otherwise specified) (Continued)

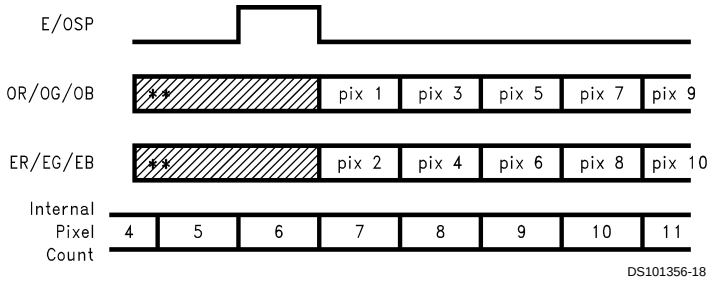

Internal Pixel Count final value = pixels per line/2

Maximum Internal Pixel Count = 1024 (32.5 MHz clocks)

Internal Pixel Count is used to generate the horizontal_component for GPO generation

See *Figure 11*

**Without Blanking control (GPO8), random data may be observed 16 OCLK before E/OSP. During this period it is also possible that 1 discontinuous (incomplete) OCLK may also be observed. However this occurence should not adversely affect the actual image since it occurs before E/OSP.

FIGURE 9. Internal Pixel Count Used for GPO Control Generation

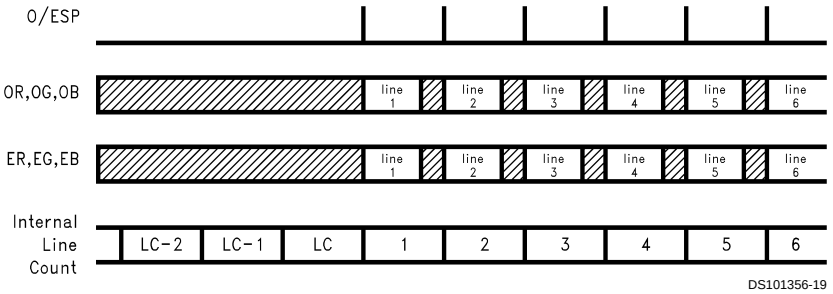

LC = lines per frame count, LCmax = 2048 lines

Internal Line Count is used to generate the vertical component for GPO generation

See *Figure 11*

FIGURE 10. Internal Line Count Used for GPO Control Generation

Device Specifications T_A = 0˚C to 70˚C, V_{DD} = 3.3V (unless otherwise specified) (Continued)

GPO Generation

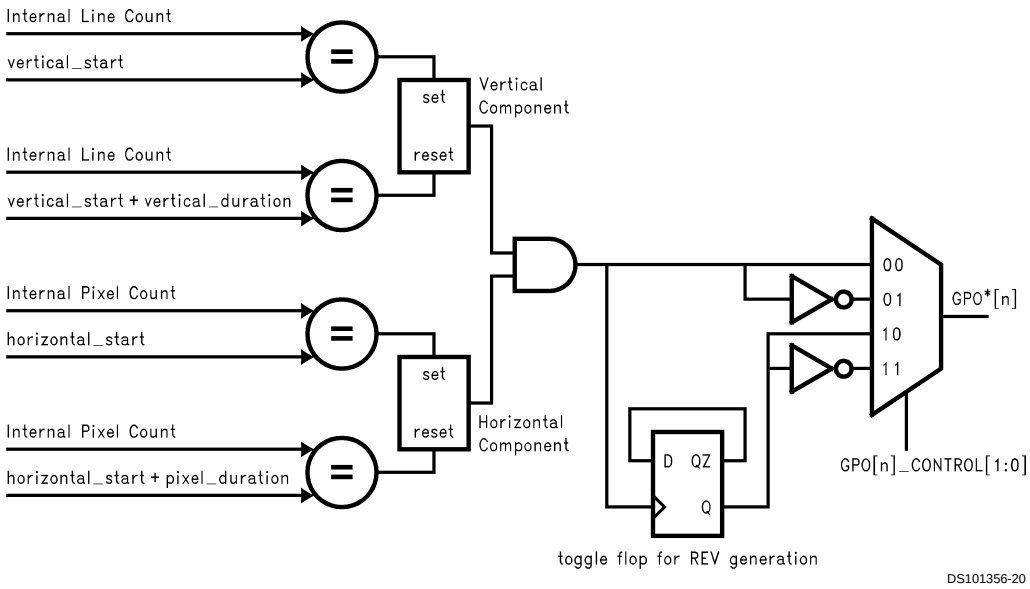

GPO Combination Select

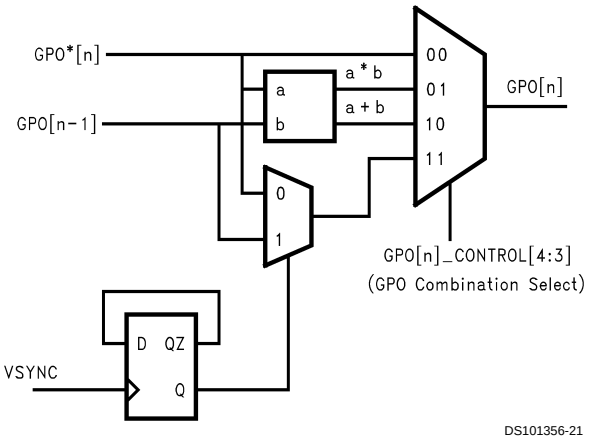

FIGURE 11. GPO Control Generation

Device Specifications T_A = 0˚C to 70˚C, V_{DD} = 3.3V (unless otherwise specified) (Continued)

FPD85308 Default Timing

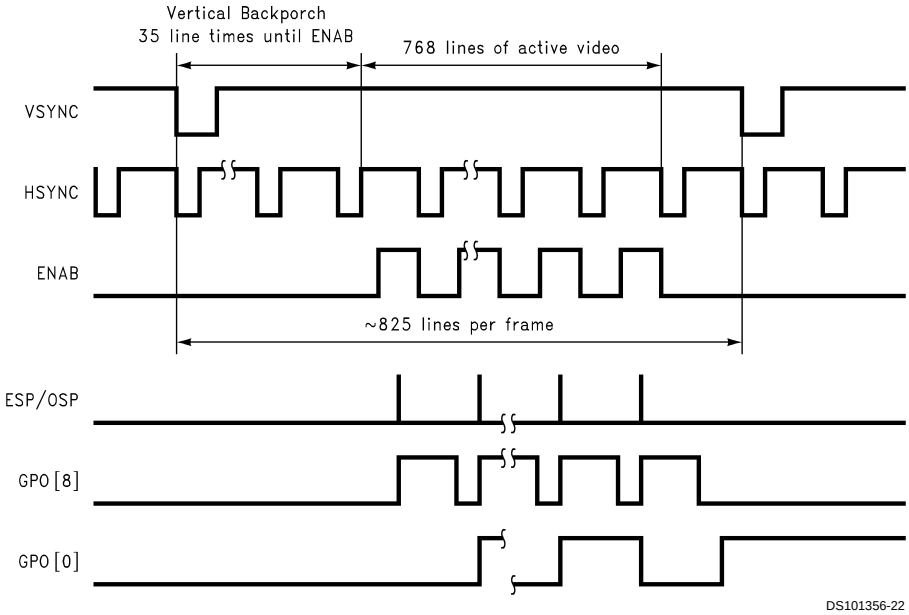

Vertical Backporch = 35
Lines/Frame = ~825
Pixels/Line = ~1200
Horizontal Backporch = ~100
Displayed pixels/line = 1024
(Valid data during ENAB High time)
Displayed lines/frames = 768
Frequency = 65 MHz (or less)

Block Diagram

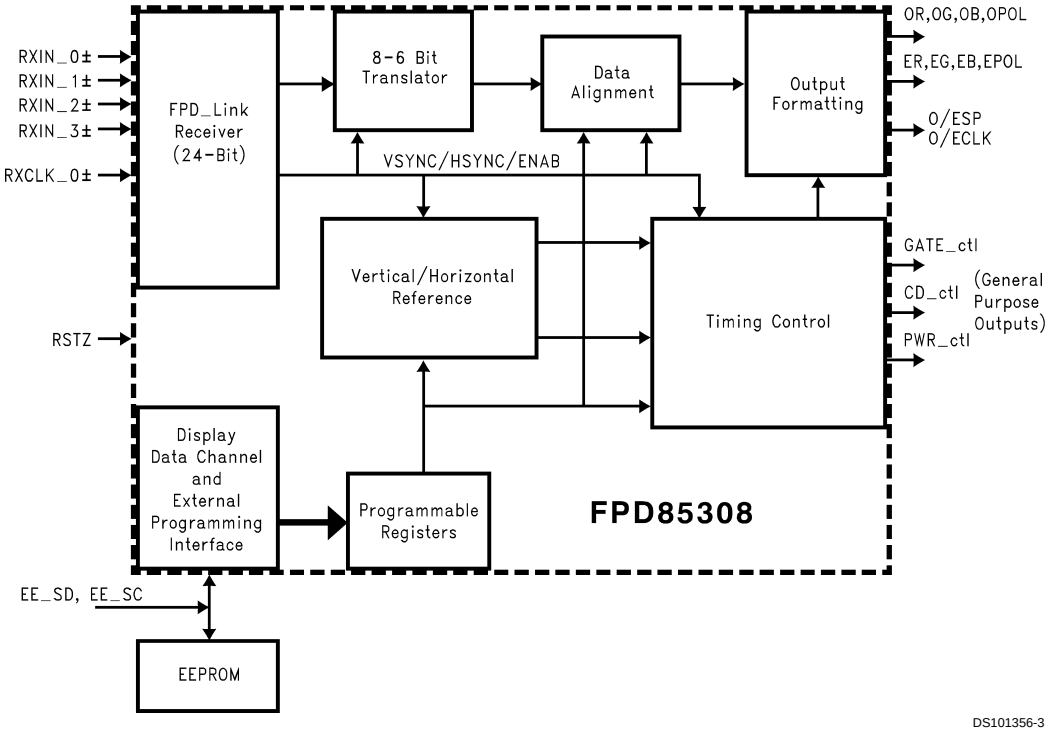

Functional Description

FPD-LINK Receiver

The LVDS based FPD-Link Receiver receives inputs video data and control timing. Four LVDS channels plus clock provide 24-bit color. Three LVDS channels can be used for 18-bit color.

The video data is regenerated to a parallel data stream and routed to the 8 to 6 Bit Translator. The General Purpose Outputs (GPOs) continue outputting the programmed control sequence at a reduced frame rate. RSTZ initialized the chip with the default register values. EEPROM configuration data is loaded if EEPROM is detected. (EEPROM address 80H = "00").

Spread Spectrum Support

The FPD-Link receiver supports graphics controllers with Spread Spectrum interfaces for reducing EMI. The Spread Spectrum method supported is Center Spread. A maximum of 2% Center Spread at a modulation frequency of 200 KHz is supported.

8 to 6 Bit Translator

8-bit data is reduced to a 6-bit data path via a time multiplexed dithering technique or a simple truncation of the LSBs. This function is enabled via the Input Control Register bits 4 and 3. See *Table 2* Input Format Control register.

Data Alignment

This function delays and aligns data to match the CD/panel architecture. Programmable selections in the Output Format Control Register bits 0 and 1 provide support for various LCD panel architectures. See *Figures 12, 13, 14, 15, 16* for additional explanation.

Dual Bus, Single Port CD Interface

When interfacing two busses to a bank of single port column drivers, the RGB data must be aligned/delayed with respect to the size of the column drivers being used. The CD Size register is programmed to support single port column drivers of up to 384 outputs (128 pixels).

Dual Bus, Dual Port CD Interface

When interfacing with dual port column drivers, data is simply output with odd and even data on separate outputs.

Single Bus, Single Port CD Interface

The single bus, single port column driver interface provides support of existing SVGA systems. All data is output on a single bus. The second bus can be turned off when using this configuration.

Output Formatting

The output formatting function provides several capabilities to reduce noise EMI and to generate customized timing. These capabilities are selectable/programmable via the Output Format Control, Output Enable/Polarity Control, and Output Drive Control Registers. See *Table 2* for specific bit definitions.

Data Bus Skewing

This function aligns the two output channels in either a non-skewed data format (simultaneous switching) or a skewed data format. The skewed format delays the even channel data and control by ½ clock. This reduces the number of outputs which switch simultaneously. See *Figures 12, 13, 14, 15, 16*. Data Bus Skewing is enabled by setting bit 2 in the Output Format Control register.

Programmable Slew Rates

Programmable edge rates allow the Data, Polarity, Start Pulse, and Clock outputs to be adjusted for better impedance matching for noise and EMI reduction. Bits [7:6] of the Output Enable/Polarity Control Register control OSP and ESP outputs. The Output Drive Control register control the OCLK, ECLK, ORGB/OPOL, ERGB/EPOL outputs.

Polarity Generation

When enabled, a polarity indication (OPOL, EPOL) is output for each data bus. When in the dual bus output configuration, if the number of transitions from pixel to pixel exceed 18 bits from a total of 36 bits, the data is then inverted and a polarity indication corresponding to that bus is set active. In the single bus (ORGB bus) applications such as SVGA, when the number of pixel to pixel transitions exceed 9 bits from a total of 18 bits, the data is inverted and the OPOL is set active. This features requires the use of a CD with a polarity input. In SKEWED dual output data bus applications, OPOL and EPOL are aligned with their respective buses and should be used as the Polarity generation input to the CD which supports dual bus/Polarity generation. In Non-Skewed dual output bus applications, OPOL is aligned with both data buses and should be used as the Polarity Generation input to the CD. The polarity function is enabled by setting bit 6 of the Output Format Control register (EEPROM address D2). The OCLK and ECLK polarity is also programmable. Inversion and TRI-STATE control of OCLK and ECLK is provided by bits [3:0] of the Output Enable/Polarity Control Register. The ERGB/ESP/EPOL and ORGB/OSP/OPAL outputs can be disabled (TRI-STATE) using bits [5:4] of the Output Enable/Polarity Control register.

Programmable Positioning of CD Start Pulse

The position of the CD Start Pulse is programmable. This allows use with column drivers having non-standard start pulse timing. The CD Start Pulse position is determined by bits [3:0] of the Output Format Control Register (EEPROM address D3).

Data Blanking

Data, Polarity, Start Pulse and Clock can be blanked (forced to "0") during horizontal and/or vertical blanking periods. GPO [8] is programmed to correspond to display periods. When GPO [8] is low, outputs are forced to "0". This reduces amount of switching over the frame time thus reducing power. See GPO programming procedure in *APPENDIX A: GPO Programming Examples*.

Line Inversion

When enabled (Bit 3 of the Output Format Register), the polarity of the output data is determined by GPO [0]. Bit 4 defines the relationship between GPO [0] and the output data. Bit 5 provides a variation of this where the Odd and Even data is of different polarity. This could be used in a system with CDs on both top and bottom of the panel in which dot inversion is desired.

Functional Description (Continued)

White Data

The White Data function generates all “1” data beginning at line 769 and continuing until the beginning of the next frame. This function is controlled via D6 Register Bit 7.

Timing Control

The Timing Control function generates control to column drivers, row drivers, and power supply. The programmable GPOs provide for CD latch pulse, REV, and gate driver control generation. The GPOs allow the user to generate control anywhere within the frame data. Standard gate driver interface or custom gate interfaces can be implemented with the nine GPOs. Note that GPO [8] must be used for output blanking control.

Five registers provide the timing definition for each GPO. The Horizontal Start register defines the output pixel number for which the GPO output goes active. The Horizontal duration register determines how many clocks the output will remain active during the line. The Vertical Start register defines at what line # the output becomes active, and the Vertical duration register defines how many lines the output remains active. Each output has a control register (bit 0) which defines the GPO polarity (active high or low). Another bit in the control register (bit 1) enables the “toggle” mode. This mode is useful in REV generation when alternating polarity is required from line to line. Frame to Frame polarity changes are made by programming an odd # in the vertical duration register when in “toggle” mode. Please note that ODD Frame size inputs are not supported in ’’toggle mode’’ function.

Two of the General Purpose Outputs have additional capabilities. GPO [8] controls output blanking and must be used for this purpose. If output blanking is not desired, this register must be programmed to always be active. White data generation (all “1” data) at the end of each frame is generated when D6 register bit 7 is set. When this bit is set, white data is output after line #768 if GPO [8] is active. GPO [0] is capable of performing line inversion on the output data. Bits [5:3] of the Output Format Control register provides control for this function.

See *APPENDIX A: GPO Programming Examples*.

SERIAL EEPROM INTERFACE

The Serial EEPROM Interface controls the FPD85308 initialization. If the EEPROM is not present (EESD and EESC are pulled high), or if EEPROM address 80H is not “00”, the internal default values are used to initialize all programmable functions of the FPD85308.

At power-up, the FPD85308 configures the internal programmable registers with data from the EEPROM. After the FPD85308 is initialized, the EEPROM can be accessed by the system in which display configuration and manufacturing information can be obtained. The EEPROM can be programmed “in system” providing quick evaluation of different display timing.

External access to the EEPROM must be preceded by applying a “1” to pin TEST [2] in order to interrupt the FPD85308 download.

The FPD85308 initialization data begins at EEPROM address 80H. The first 128 bytes (0-7F) are reserved for display identification data.

A power-up delay can be programmed using bits [6:5] of the Input Format Control Register. This delays outputting (driving) of the data and control for up to 5 frame times after reset. The TEST [2] pin must be low for a power-up delay to occur.

VERTICAL/HORIZONTAL REFERENCE GENERATOR

This block provides Vertical and Horizontal Reference points for the Timing Control Function. VSYNC, HSYNC and ENAB along with programmable control from the input control register bits 0 and 1 (FIX HORIZONTAL and FIX VERTICAL) are used to determine when the video from the host is valid. Three input modes are supported. See *Table 1*.

Fixed Vertical, Fixed Horizontal

The horizontal timing is fixed and determined by the Horizontal Backporch register. The vertical timing is also fixed and determined by the Vertical Backporch register. ENAB is ignored and is not necessary.

Fixed Vertical, ENAB Controlled Horizontal

The horizontal timing is controlled by the ENAB timing. The vertical timing is fixed and determined by the Vertical Backporch register and HSYNC input.

ENAB Only

In ENAB Only timing, VSYNC and HSYNC are ignored. All timing is derived from the ENAB signal.

Functional Description (Continued)

TABLE 1. Input Mode Definition

INPUT FORMAT FIXED VERTICAL, FIXED HORIZONTAL determined by the INPUT CONTROL REGISTER bits [1:0]	HORIZONTAL DATA START	VERTICAL DATA START
FIXED VERTICAL, FIXED HORIZONTAL (FIX VERTICAL = 1, FIX HORIZONTAL = 1)	Programmable from HSYNC Falling Edge (# INPUT CLKS)	Programmable from VSYNC Falling Edge (# HSYNC PERIODS)
FIXED VERTICAL, FIXED HORIZONTAL ENABLE (FIXED VERTICAL = 1, FIXED HORIZONTAL = 0)	Data Valid during ENAB high. HSYNC input required for FIXED VERTICAL operation.	Programmable from VSYNC Falling Fdge (# HSYNC PERIODS)
ENAB ONLY (FIXED VERTICAL = 0, FIXED HORIZONTAL = 0)	Data Valid during ENAB High (HSYNC is IGNORED)	First ENAB after ENAB low for greater than one line time (VSYNC is IGNORED)

Functional Description (Continued)

PROGRAMMABLE REGISTERS

At power-up, data is read from an external EEPROM. If anything other than 00H is read back on the first EEPROM access (indicating EEPROM not present), the internal default values are used. The following parameters are initialized at power up. Pullups must be used on EE_SD and EE_SC pins.

TABLE 2. FPD85308 Programmable Register Definition

Control Registers	EEPROM Address	The control registers provide mode setting information to the input and output interfaces.	
Output Format Control	D2	[1:0]	“00” = Dual Bus, Single port CD interface “01” = Dual Bus, Dual port CD interface “10” = Single Bus, Single port CD interface “11” = Not implemented (defaults to “10”)
		[2]	“0” = Non-Skewed outputs “1” = Skewed outputs
		[3]	“0” = Data inversion is disabled “1” = Data inversion is enabled
		[4]	“0” = Data inversion when GPO[0] is “0” “1” = Data inversion when GPO[0] is “1”
		[5]	“0” = Even and Odd data inversion when data inversion is enabled “1” = Odd data inversion determined by bit[4], Even data opposite of Odd data
		[6]	“0” = Polarity Function disabled “1” = Polarity Function enabled
		[7]	“0” = OPOL/EPOL = 0 when data is inverted “1” = OPOL/EPOL = 1 when data is inverted
	D3	[1:0]	Odd Start Pulse Offset “00” = Start pulse 0 clocks before data “01” = Start pulse 1 clock before data “10” = Start pulse 2 clocks before data “11” = Start pulse 3 clocks before data
		[3:2]	Even Start Pulse Offset “00” = Start pulse 0 clocks before data “01” = Start pulse 1 clock before data “10” = Start pulse 2 clocks before data “11” = Start pulse 3 clocks before data
		[7:4]	Unused Pixels “0000” = no unconnected pixels at beginning of first CD “0001” = 1 unconnected pixel at beginning of first CD “0010” = 2 unconnected pixels at beginning of first CD ... ... “1111” = 15 unconnected pixels at beginning of first CD

Functional Description (Continued)

TABLE 2. FPD85308 Programmable Register Definition (Continued)

Control Registers	EEPROM Address	The control registers provide mode setting information to the input and output interfaces.	
Output Enable/Polarity Control	DB	[0]	OCLK Enable (1-On, 0-TRI-STATE)
		[1]	OCLK Polarity (1-Per Datasheet, 0-Inverted)
		[2]	ECLK Enable (1-On, 0-TRI-STATE)
		[3]	ECLK Polarity (1-Per Datasheet, 0-Inverted)
		[4]	ORGB/OSP/OPOL Enable (1-On, 0-TRI-STATE)
		[5]	ERGB/ESP/EPOL Enable (1-On, 0-TRI-STATE)
		[7:6]	OSP/ESP Control [7,6] Output 0,0 Lowest Drive 0,1 .. 1,0 .. 1,1 Highest Drive
Output Drive Control	D4	[1:0]	OCLK Control
		[3:2]	ECLK Control
		[5:4]	ORGB/OPOL Control
		[7:6]	ERGB/EPOL Control [A,B] Output 0,0 Lowest Drive 0,1 .. 1,0 .. 1,1 Highest Drive
CD Size	D5	[7:0]	= # Data/CD This number defines how many contiguous pixels are output on the odd and even data channels for the single port CD interface. CD sizes of up to 128 pixel (384 channel) are supported. A minimum value of 20H must be programmed regardless of CD interface used.
Input Format Control	D6	[0]	Fix Vertical “0” = Vertical position dependent on first ENAB from VSYNC “1” = Vertical position dependent on Vertical Backporch Register
		[1]	Fix Horizontal “0” = Horizontal position dependent on ENAB “1” = Horizontal position dependent on Horizontal Backporch Register *See *Table 1* for valid mode combinations.
		[2]	Must be “0”
		[3]	Enable/Disable Virtual 8-bit (8-bit input only) “0” = Virtual 8-bit enabled (FRC) “1” = Virtual 8-bit disabled (Truncate LSBs)
		[4]	Eight/Six Bit Video “0” = Six Bit Video “1” = Eight Bit Video
		[6:5]	Power-up Delay (TEST2 must be “0”) “00” = Outputs active after second VSYNC “01” = Outputs active after third VSYNC “10” = Outputs active after fourth VSYNC “11” = Outputs active after fifth VSYNC
		[7]	White Data Generation “0” = No white data generation “1” = Enables white data generation during vertical blanking

Functional Description (Continued)

TABLE 2. FPD85308 Programmable Register Definition (Continued)

Control Registers	**EEPROM Address**	**The control registers provide mode setting information to the input and output interfaces.**
Vertical Backporch (11 bits)	DA, D9	# of HSYNCS from VSYNC falling edge until start of video
Horizontal Backporch (11 bits)	D8, D7	# of 65 MHz clocks after the falling edge of HSYNC until start of video
General Purpose Output Registers (9 sets)	See *Table 3* EEPROM Memory Map	The GPO registers provide complete control over placement of control edges/strobes within the data frame. The GPO timing registers (Vertical Start, Vertical Duration, Horizontal Start, and Horizontal Duration) define the control timing relative to the internal line and pixel counters. The line counter corresponds to the line being displayed. The pixel counter corresponds to the pixel output each line. The Control Register provides polarity selection and/or generation of a line to line frame-to-frame alternating signal (REV). Each General Purpose Output can be uniquely configured. See the GPO programming examples for details. - GPO [0] provides for the data inversion function enabled by bit 3 of the Output Format Control Register - GPO [8] provides programmable data and clock blanking
Vertical Start (11 bits)		Line # at which GPO [X] control generation begins
Vertical Duration (11 bits)		# lines GPO [X] control generation continues (if “0”, Vertical component is always on)
Horizontal Start (10 bits)		Internal count (pixel counter) at which GPO [X] goes active to be triggered on rising edge of the OCLK Note: If control register [1] = “1”, start position will be moved by 1 pixel clock
Horizontal Duration (11 bits)		# Pixel Clocks/2 GPO [X] is active after Horizontal Start (if “0”, Horizontal component is always on)

Functional Description (Continued)

TABLE 2. FPD85308 Programmable Register Definition (Continued)

Control Registers	EEPROM Address	The control registers provide mode setting information to the input and output interfaces.
Control Register (5 bits)		[0]. Output polarity - defines active high or active low output "0" = normal output (active high) "1" = inverted output (active low)
		[1]. Toggle circuit enable/disable "0" = Normal GPO output; Toggle circuitry disabled "1" = Toggle circuitry enabled; output transitions after 1 clock (pixel counter) whenever programmed rising edge of GPO occurs. When "toggle circuit" is enable, the value of "Horizontal Duration" register programming determine; "001h"~'1 H-line-1' = 1 H-line toggling, '1 H-line'~'2 H-line-1' = 2 H-line toggling, etc. up to 11 bits are set.
		[2]. Automatic Frame Size Detection GPO [0:1] "0" = Normal Operation "1" = Used with toggle circuitry to create a "continuous" REV signal. NOTE: The value of the vertical duration register is overwritten. ODD Frame size inputs are not supported. GPO [2:8] "0" = Normal Operation "1" = Early Start capability (Vertical Duration = "00" is N/A, See *Table 4*) The value in the Vertical Start Register is subtracted from the total number of lines/frame (auto-detected) to determine the Vertical Start position. (It needs a full frame after RSTZ, then started with 1 frame delayed to compare to the other GPOs)
		[4:3] GPO [0:8] Combination Select* (Two GPOs or multi GPOs) "00" = Select GPO# as programmed. (no combination function) "01" = Select GPO# "ANDed" with GPO#-1 "10" = Select GPO# "ORed" with GPO#-1 "11" = Select GPO# and GPO#-1 on alternating frames (*If the transition of GPO#-1 effect the combined result, it should be delayed 1 OCLK, and GPO0 cannot be programmed by non-existing of "GPO-1") (Examples) GPO#-1 AND GPO#, (GPO#-2 and GPO#-1) OR GPO# and etc.

TABLE 3. EEPROM Memory Map

Address	Data (# bits)	Default Values
0-7F	DDC VESA DATA	(HEX)
80	programmed to 00H for EEPROM auto detect	00
82,81	gpo [8]_pstart_reg (10)	00,01
84,83	gpo [8]_pcount_reg (11)	02,2D
86,85	gpo [8]_lstart_reg (11)	00,01
88,87	gpo [8]_lcount_reg (11)	03,02
89	gpo [8]_cont_reg (5)	00
8B,8A	gpo [7]_pstart_reg (10)	00,14
8D,8C	gpo [7]_pcount_reg (11)	01,E0
8F,8E	gpo [7]_lstart_reg (11)	00,02
91,90	gpo [7]_lcount_reg (11)	03,00
92	gpo [7]_cont_reg (5)	01

Functional Description (Continued)

TABLE 3. EEPROM Memory Map (Continued)

Address	Data (# bits)	Default Values
94,93	gpo [6]_pstart_reg (10)	00,01
96,95	gpo [6]_pcount_reg (11)	02,9F
98,97	gpo [6]_lstart_reg (11)	01,FD
9A,99	gpo [6]_lcount_reg (11)	00,01
9B	gpo [6]_cont_reg (5)	01
9D,9C	gpo [5]_pstart_reg (10)	00,01
9F,9E	gpo [5]_pcount_reg (11)	02,9F
A1,A0	gpo [5]_lstart_reg (11)	00,FD
A3,A2	gpo [5]_lcount_reg (11)	00,01
A4	gpo [5]_cont_reg (5)	01
A6,A5	gpo [4]_pstart_reg (10)	00,01
A8,A7	gpo [4]_pcount_reg (11)	02,9F
AA,A9	gpo [4]_lstart_reg (11)	03,22
AC,AB	gpo [4]_lcount__reg (11)	00,01
AD	gpo [4]_cont_reg (5)	01
AF,AE	gpo [3]_pstart_reg (10)	01,E0
B1,B0	gpo [3]_pcount_reg (11)	00,28
B3,B2	gpo [3]_lstart_reg (11)	00,01
B5,B4	gpo [3]_lcount_reg (11)	00,00
B6	gpo [3]_cont_reg (5)	01
B8,B7	gpo [2]_pstart_reg (10)	02,0B
BA,B9	gpo [2]_pcount_reg (11)	00,14
BC,BB	gpo [2]_lstart_reg (11)	00,01
BE,BD	gpo [2]_lcount_reg (11)	03,00
BF	gpo [2]_cont_reg (5)	00
C1,C0	gpo [1]_pstart_reg (10)	02,0D
C3,C2	gpo [1]_pcount_reg (11)	00,0A
C5,C4	gpo [1]_lstart_reg (11)	00,01
C7,C6	gpo [1]_lcount_reg (11)	03,01
C8	gpo [1]_cont_reg (5)	03
CA,C9	gpo [0]_pstart_reg (10)	02,0D
CC,CB	gpo [0]_pcount_reg (11)	00,0A
CE,CD	gpo [0]_lstart_reg (11)	00,01
D0,CF	gpo [0]_lcount_reg (11)	03,01
D1	gpo [0]_cont_reg (5)	02
D3,D2	output_format (16)	00,00
D4	output_drive (8)	AA
D5	cd_size (8)	67
D6	input_format (8)	01

Functional Description (Continued)

TABLE 3. EEPROM Memory Map (Continued)

Address	Data (# bits)	Default Values
D8,D7	hbp_reg (11)	00,94
DA,D9	vbp_reg (11)	00,23
DB	output_enable/polarity_control (8)	BF
FF–DC	not used/not loaded	—

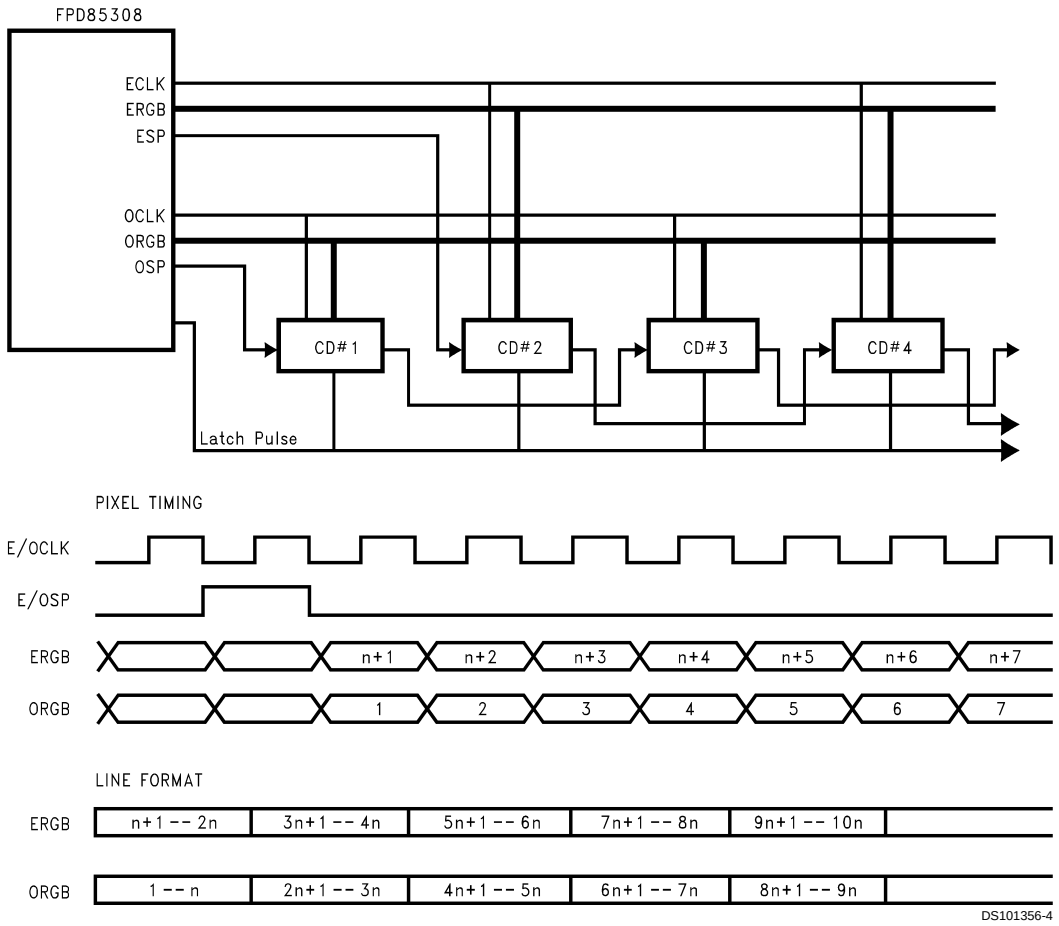

Note 7: Programmable CD Size "n" (up to 128)

Note 8: One or both clocks can be used

Note 9: Unused clocks can be turned off

Note 10: E/OCLK polarity is programmable

FIGURE 12. Dual Bus Single Port Column Driver Interface (Non-skewed outputs)

Functional Description (Continued)

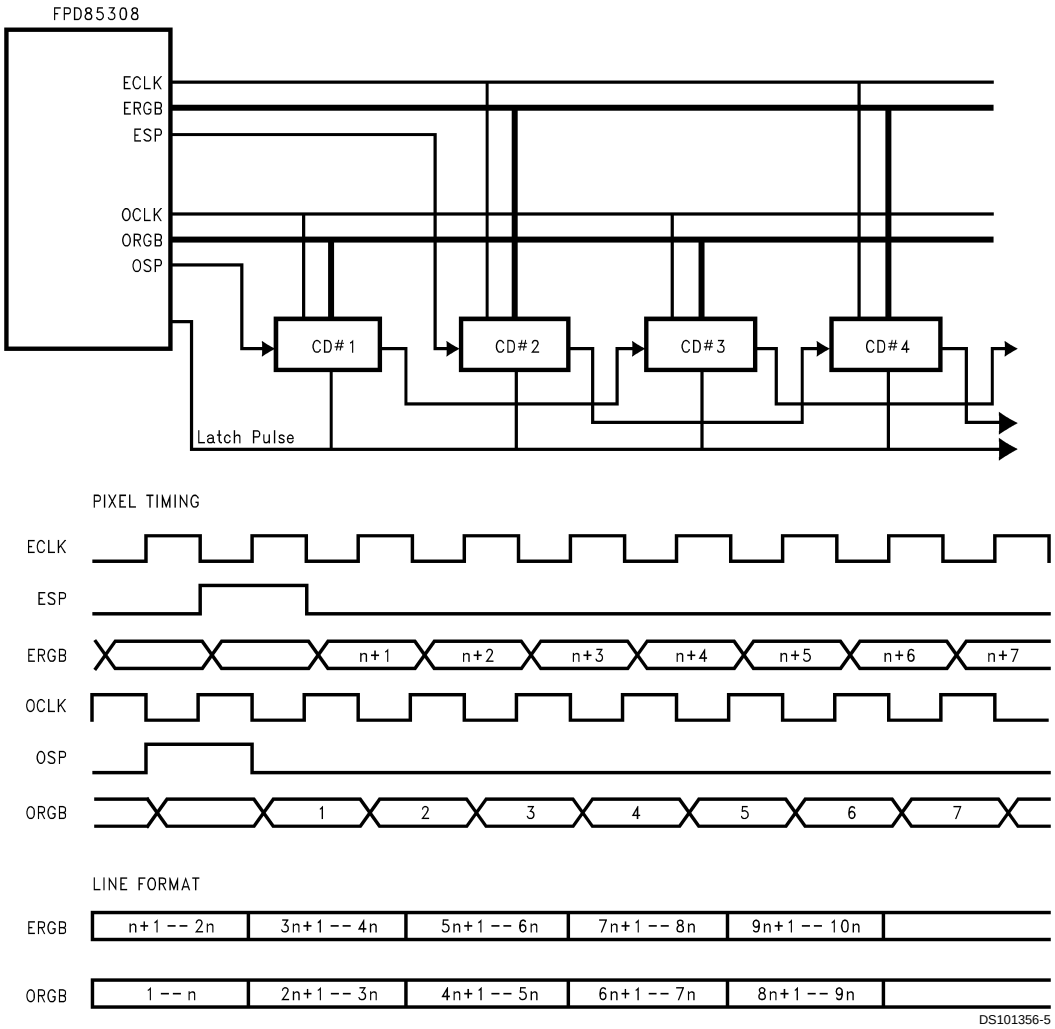

Note 11: Programmable CD Size “n” (up to 128)

Note 12: Data skewed to reduce simultaneous switching

FIGURE 13. Dual Bus Single Port Column Driver Interface (Skewed outputs)

Functional Description (Continued)

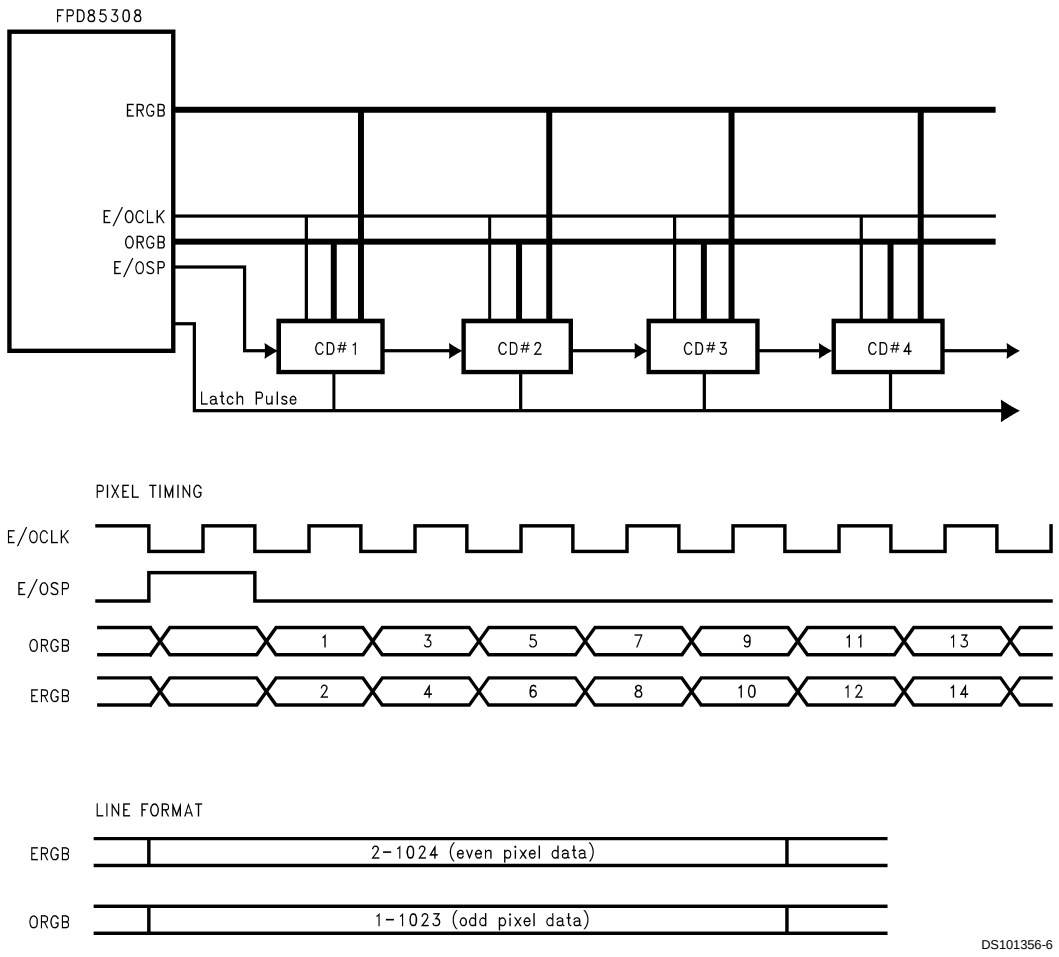

Note 13: One or both clocks can be used

Note 14: Unused clock can be turned off

FIGURE 14. Dual Bus Dual Port Column Driver Interface (Non-skewed outputs)

Functional Description (Continued)

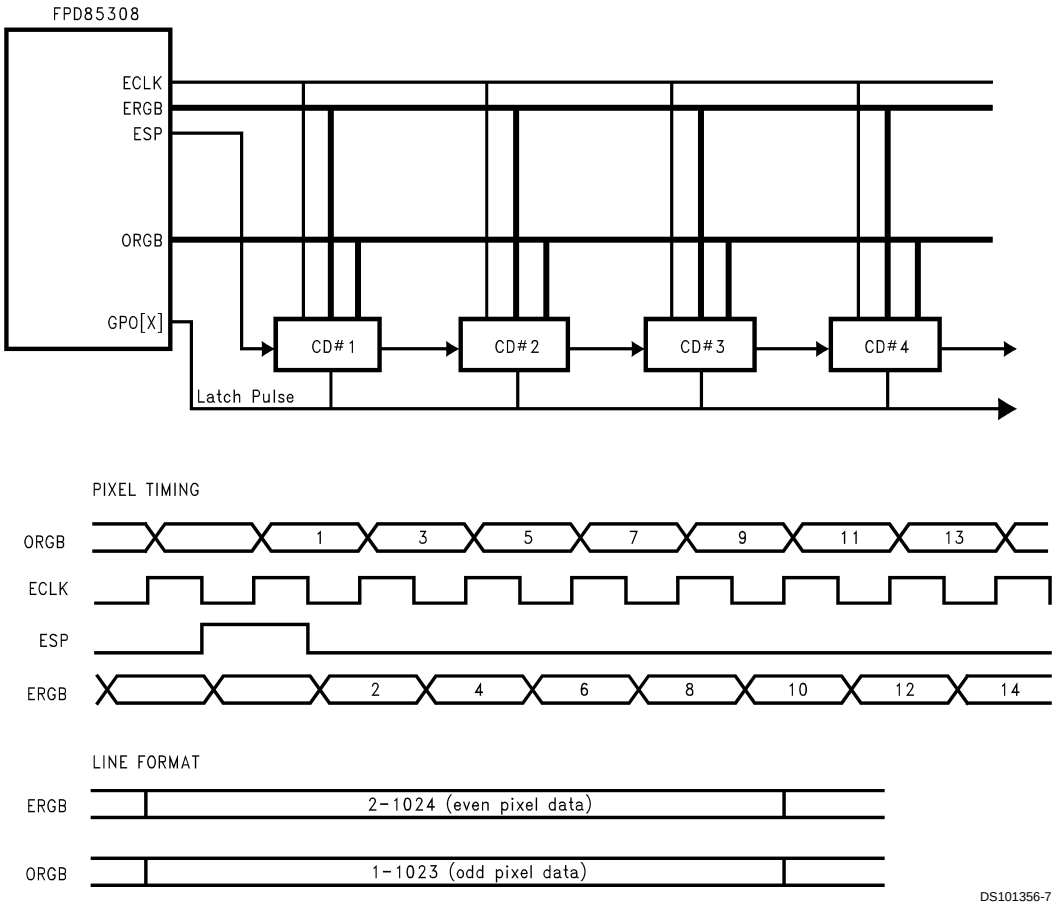

Note 15: Data skewed to reduce simultaneous switching

FIGURE 15. Dual Bus Dual Port Column Driver Interface (Skewed outputs)

Functional Description (Continued)

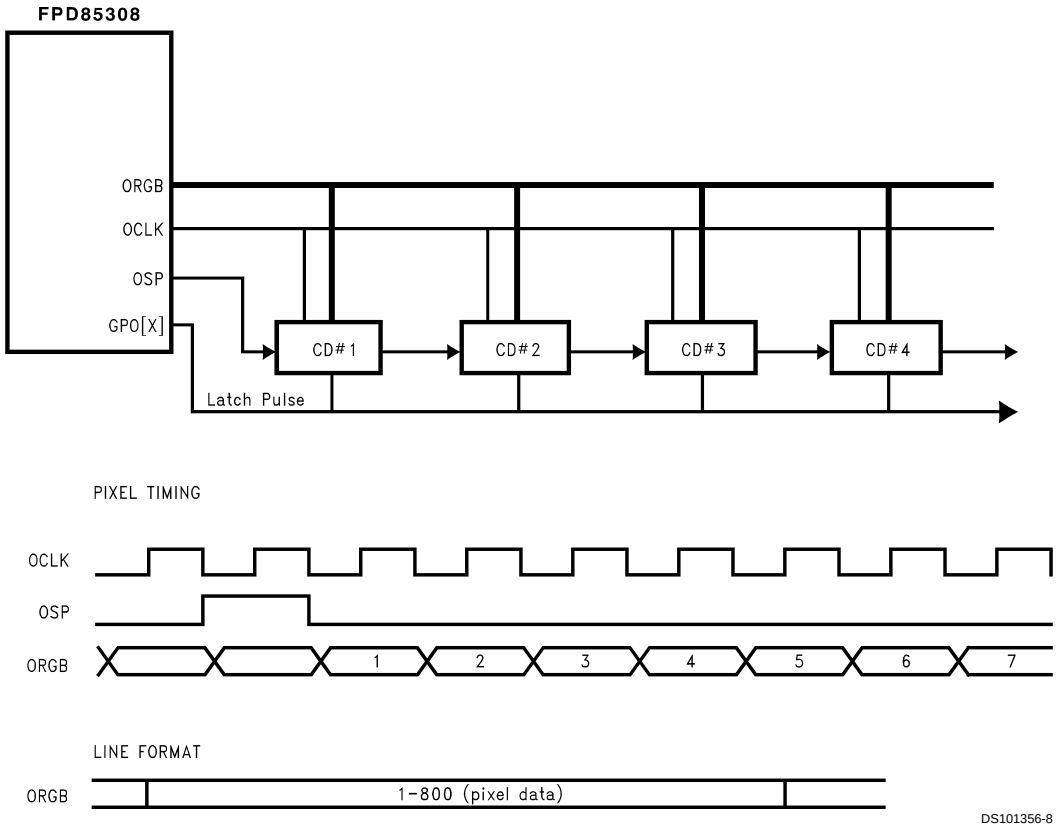

Note 16: ECLK/ERGB not used — These outputs can be disabled by setting bits 2 and 5 to "0" in the Output Enable/Polarity Control register.

Note 17: Start pulse offset* (D3 [1:0]) is defined as below only in this mode.

"00" — Start pulse 1 clock after 1st data

"01" — Start pulse 1 clock before 1st data

"10" — Start pulse 3 clocks before 1st data

"11" — Start pulse 5 clocks before 1st data

*Start pulse position can be adjusted precisely by unused pixels register (D3 [7:4])

Note 18: The Pcount and Pstart registers are programmed by 2 OCLK only in this mode. (Example) Pcount Register = "02":4 OCLK duration

FIGURE 16. Single Port Single Bus Column Driver Interface (SVGA Application)

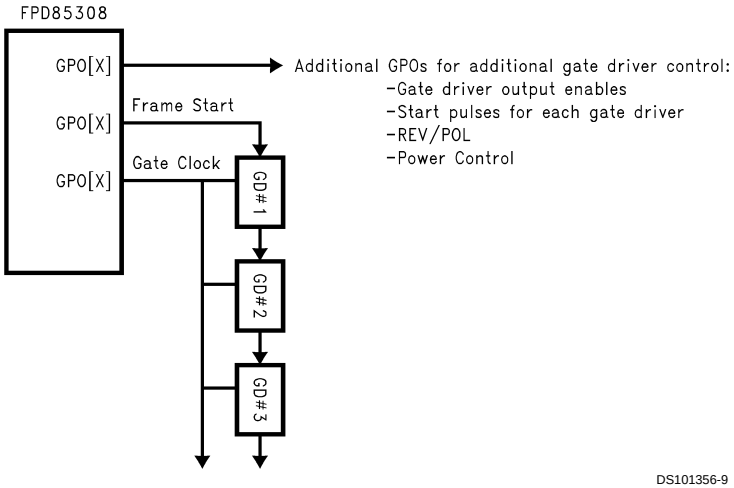

Note 19: Total of eight GPOs for REV, LP, and Gate Driver Control (GPO [8] dedicated to blanking function)

Note 20: GPO resolution is video clock/2

FIGURE 17. Standard or Custom Gate Driver Interface

Functional Description (Continued)

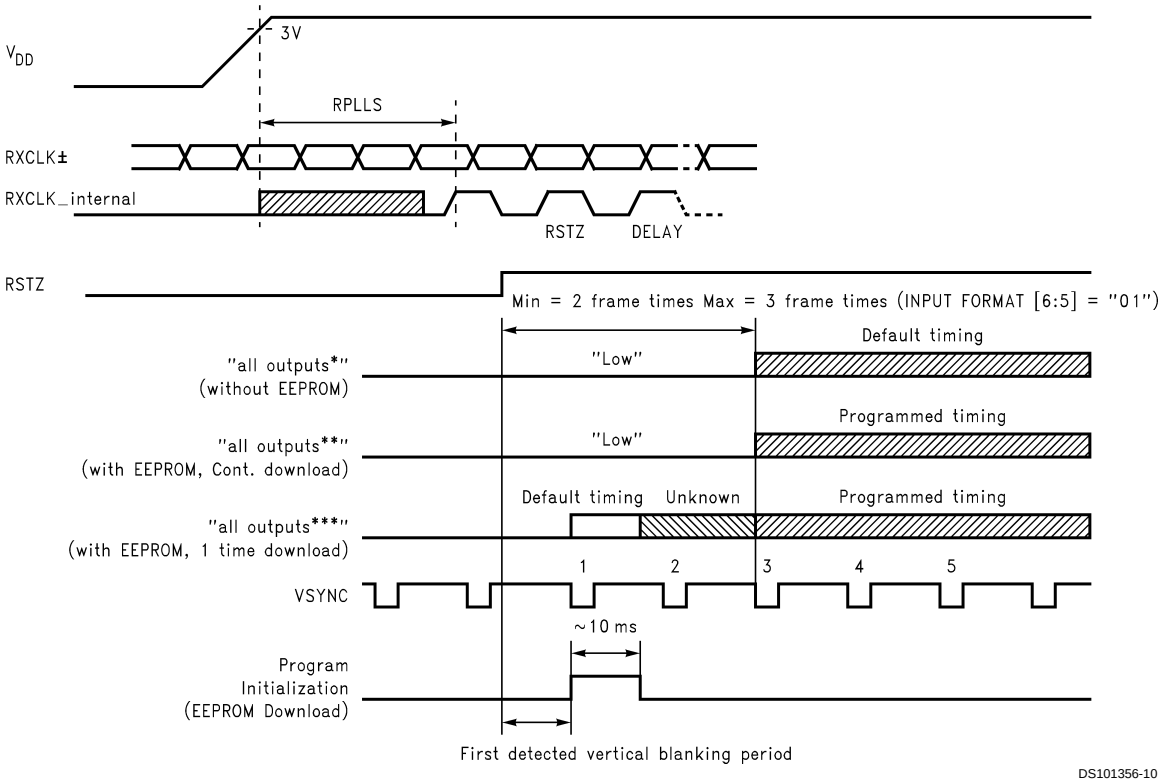

Note 21: RSTZ transition Low-to-High occurs at the completion of the RPLLS delay or later as shown above.

Note 22: All outputs* forced low in default timing of FPD85308 during power-up delay time.

Note 23: All outputs** forced low in continuous download (every two frame) mode.

Note 24: All outputs*** generate the signal for default values in FPD85308 and unknown values when use the EEPROM values during power-up delay time. Then NS recommend to use the continuous download mode.

Note 25: EEPROM download occurs at first detected vertical blanking period.

Note 26: Active outputs depends on INPUT FORMAT register bits [5:6].

INPUT FORMAT [5:6]	VSYNC# at which outputs go active
00	Second VSYNC
01	Third VSYNC
10	Fourth VSYNC
11	Fifth VSYNC

Note 27: When configured in ENAB Only Mode (EOM), VSYNC signals are unused except for timing EEPROM DownLoad Sequences. When configured with default values in Fixed Vertical mode, the VSYNC signal is generated any time ENAB remains low for more than 2 horizontal periods.

During Power Up, before Reset has propagated, the EEPROM may receive spurious addressing that initiates a down load sequence, but the output data is often not captured for lack of timing alignment with VSYNC. In the case where EEPROM data is not captured during the initial (automatic) Reset or Power Up DownLoad sequence, Timing Controller outputs are indeterminate until the EEPROM data is successfully loaded, which always begins and is executed at the next VSYNC valid (low) cycle.

Note 28: During Power Up sequences, false RSTZ signals are possible due to instability of the power supply level, typically within the 10 ms of operation. To avoid this situation, implementation of the circuit in *Figure 19*, or other functional equivalent, is recommended, (*Figure 19*).

FIGURE 18. Power-up Sequence (INPUT FORMAT[6:5] = “01”)

Functional Description (Continued)

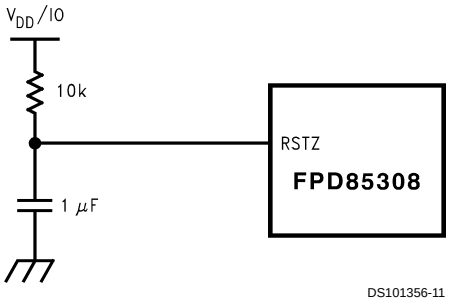

FIGURE 19. Delay Circuit for Stable RSTZ

Connection Diagram

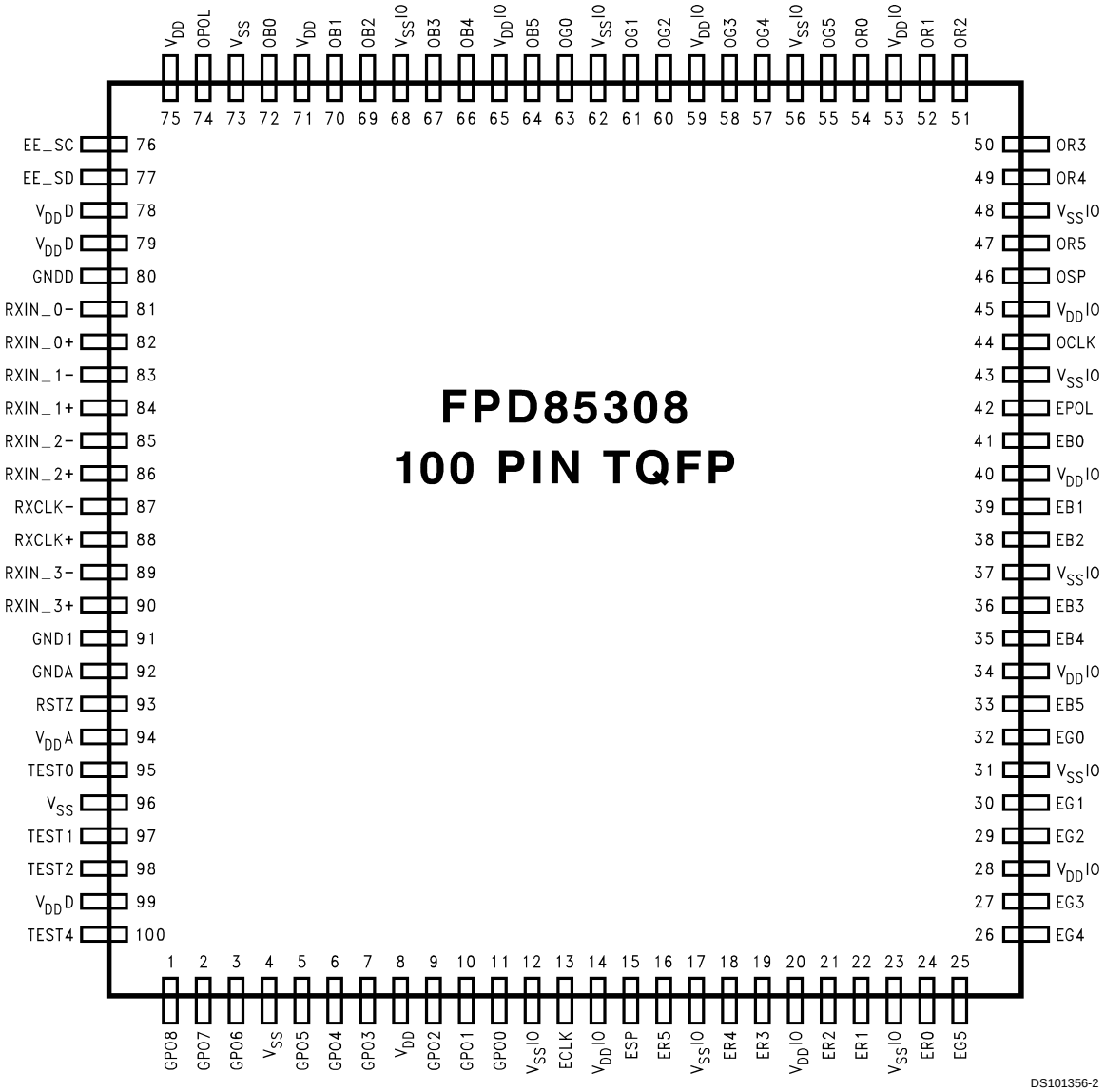

Order Number FPD85308VJD
See NS Package Number VJD100A

Pin Description

Pin No: Pin Count	Pin Name	I/O	Description
SYSTEM INTERFACE			
2	RXIN_0±	LVDI	FPD-Link data pair 0
2	RXIN_1±	LVDI	FPD-Link data pair 1
2	RXIN_2±	LVDI	FPD-Link data pair 2
2	RXIN_3±	LVDI	FPD-Link data pair 3 (used in 8-bit video applications)
2	RXCLK±	LVDI	FPD-Link Clock
1	RSTZ	STI	Reset, Active Low
COLUMN DRIVER INTERFACE			
1	ECLK	POH	Even CD Bus Clock
1	ESP	POL	Even Start Pulse
6	ER0..ER5	POL	Even Red Bus:
6	EG0..EG5	POL	Even Green Bus:
6	EB0..EB5	POL	Even Blue Bus:
1	EPOL	POL	Even Polarity
1	OCLK	POH	Odd CD Bus Clock
1	OSP	POL	Odd Start Pulse
6	OR0..OR5	POL	Odd Red Bus:
6	OG0..OG5	POL	Odd Green Bus:
6	OB0..OB5	POL	Odd Blue Bus:
1	OPOL	POL	Odd Polarity
GENERAL PURPOSE OUTPUTS			
9	GPO[8:0]	TO	General Purpose Outputs
EEPROM INTERFACE			
1	EE_SD	I/TO	EEPROM Serial Data
1	EE_SC	I/TO	EEPROM Clock
POWER SUPPLY			
1	$V_{DD}A$	P	PLL and Bandgap Supply
1	GND1	G	PLL Ground
1	GNDA	G	Bandgap Ground
3	$V_{DD}D$	P	LVDS Receiver Supply
1	GNDD	G	LVDS Receiver Ground
10	$V_{SS}IO$	G	IO Ground
9	$V_{DD}IO$	P	IO Power
3	V_{SS}	G	Digital Ground
3	V_{DD}	P	Digital Power
TEST/CONFIGURATION			
4	TEST[4–0]	I	Test/Configuration Pins. TEST[0] — Must be “0” TEST[1] — Must be “0” TEST[2] “0” — EEPROM init values loaded every 2 frames “1” — EEPROM init values loaded once at power-up TEST[4] — Must be “0”

- I/TO — TTL Input/TRI-STATE® output
- TO — TRI-STATE output
- POL — Programmable (Low Drive)
- POH — Programmable (High Drive)
- I — TTL Input
- LVDI — Low Voltage Differential Input

Pin Description (Continued)

•P — Power
•G — Ground
STI — Schmitt Trigger Input

APPENDIX A: GPO Programming Examples

The GPO control generation is based on the internal line count and pixel count shown in *Figure 9* and *Figure 10*. Two programmable registers (Vertical Start and Vertical Duration) control the vertical component of the control signal. This establishes at what line and for how many lines the control signal will be active. Likewise, two programmable registers (Horizontal Start and Horizontal Duration) control the horizontal component of the control signal. The Horizontal register values determine at what pixel count the signal goes active and for how many pixel counts the signal stays active during each line. The Vertical Component enables the signal for however many lines programmed for and the Horizontal Component generates pulses within that vertical time period.

Generally the following types of signals are generated:

1. DC (either 1 or 0)
2. A pulse every line
3. A pulse once a frame (either in pixels or lines)
4. Pulsed during active video (pulses are blanked during vertical blanking period of frame)

Table 4 describes the programming requirements for general types of pulses generated.

The GPO's also have a "toggle mode". This provides the capability to generate a "REVERSAL" signal used in most LCD applications. Bit 1 of the Control register is set to a 1 to enable toggle mode operation. The GPO is programmed so that a rising edge is produced when the control signal is required to toggle. This generally occurs once each line. Also, the # of edges generated per frame is programmed to be an odd #. This ensures that the control signal will alternate polarity from frame to frame.

Examples of GPO programming to produce specific control signals are included in the following pages.

TABLE 4. GPO Pulse Generation

Vertical Start	Vertical Duration	Horizontal Start	Horizontal Duration	GPO Output
=don't care	=0	=0	=0	Stuck 0 (When Output Polarity = 0) Stuck 1 (When Output Polarity = 1) Polarity control is in GPO Control Register bit 0
=don't care	=0	#A	=0	Stuck 1 (When Output Polarity = 0) Stuck 0 (When Output Polarity = 1) Polarity control is in GPO Control Register bit 0
=don't care	=0	#A	#B (Note 29)	Pulse is generated every line beginning at ~#A 32 MHz clocks from start of output line and lasting for #B 32 MHz clocks
#A	#B	#C	=0	Pulse begins at line #A , clock #C and continues to line #(A+B) pixel #C (multi-line pulse)
#A	#B	#C	#D (Note 29)	Pulse generation begins at line A and continues for #B lines. Each pulse begins at ~pixel #C and lasts for D counts

Note 29: Pulses will occur every other line if Horizontal Duration is greater than a line time.

APPENDIX A: GPO Programming Examples (Continued)

GPO Programming Example #1:

Generate a control signal which transitions high at the end of each line, has a pulsewidth of 3 µs, and remains low during the vertical blanking period. This control is used for the latch pulse to the column drivers.

Horizontal time (clocks/line) = 1300 dot clocks

Vertical period (lines/frame) = 850 lines

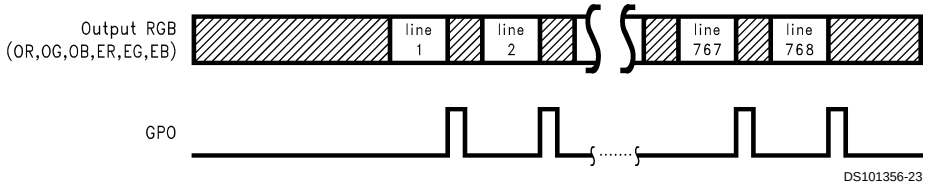

Vertical control is active beginning at line 1 and remains active for 768 lines.

GPO Vertical Start Register = 1

GPO Vertical Duration Register = 768d (300h)

Positive pulse goes high each line at output clock 512 corresponding to when the last two pixels are output on OR, OG, OB, ER, EG, EB. Pulse remains high for 98 output clocks (98 x 30.8 ns/clock = 3.02 µs). (Dual Bus output clock = 32.5 MHz for 65 MHz XGA video, 1024 pixels/line, 768 displayed lines/frame).

Note: 6 counts are added to the output start # because the GPO pixel count begins 6 clocks prior to the output data.

GPO Horizontal Start Register = 518d (206h)

GPO Horizontal Duration Register = 98d (62h)

The control pulses are positive (bit [0] = 0) and the toggle circuitry is disabled (bit1 [1] = 0).

GPO Control Register = 0

APPENDIX A: GPO Programming Examples (Continued)

GPO Programming Example #2:

Generate a control signal which transitions low 20 output clocks after the beginning of each output line, has a pulse-width (low) of 12 µs, and goes high during horizontal blanking. This control signal is used as an output enable for the gate drivers.

Horizontal time (clocks/line) = 1300 dot clocks

Vertical period (lines/frame) = 850 lines

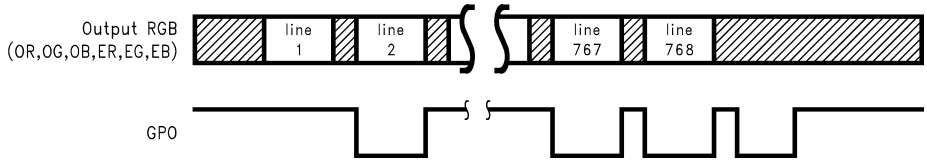

DS101356-24

Control is active beginning at line 2 and remains active for 768 lines.

GPO Vertical Start Register = 2

GPO Vertical Duration Register = 768d (300h)

Negative pulse goes low each line at output clock 20 corresponding to when the 39/40 pixels are output on OR, OG, OB, ER, EG, EB. Pulse remains low for 390 output clocks (390 x 30.8 ns/clock = 12 µs). (Dual Bus output clock = 32.5 MHz for 65 MHz XGA video, 1024 pixels/line, 768 lines/frame).

Note: 6 counts are added to the output clock # because the GPO start count begins 6 clocks prior to the output data.

GPO Horizontal Start Register = 26d (1ah)

GPO Horizontal Duration Register = 390d (186h)

The control pulses are negative (bit [0] = 1) and the toggle circuitry is disabled (bit1 [1] = 0).

GPO Control Register = 1

APPENDIX A: GPO Programming Examples (Continued)

GPO Programming Example #3:

Generate a control signal which toggles during horizontal blanking and alternates polarity each frame. This control signal is used as the reversal signal.

Horizontal time (clocks/line) = 1300 dot clocks

Vertical period (lines/frame) = 850 lines

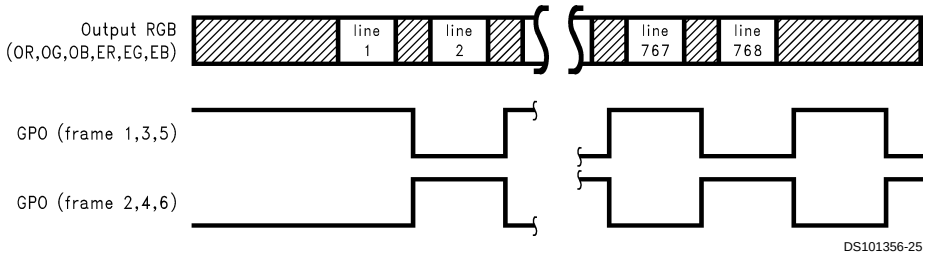

Control is active beginning at line 1 and remains active for 769 lines.

(Odd number programmed in Duration Register causes control signal to alternate polarity each frame)

GPO Vertical Start Register = 1

GPO Vertical Duration Register = 769d (301h)

Positive going pulse causes output to toggle. Edge occurs 20 output clocks after end of each line (1024/2 + 20 = 532). Pulse duration is not critical since the output will be in toggle mode. (Dual Bus output clock = 32.5 MHz for 65 MHz XGA video, 1024 pixels/line, 768 lines/frame).

Note: 6 counts are added to the output start # because the GPO pixel count begins 6 clocks prior to the output data.

GPO Horizontal Start Register = 538 (238h)

GPO Horizontal Duration Register = 10d (0Ah)

The control pulses are positive (bit [0] = 0) and the toggle circuitry is enabled (bit1 [1] = 1).

GPO Control Register = 2

(For a second control signal of opposite polarity, program another GPO Control Register with same count values with GPO Control Register = 3.)

APPENDIX B:

National Semiconductor
FPD85308 REQUEST FORM OF MASK VERSION

Company Name:_____Dept:_____ Tel: _____

Model Name (Application): _____

Register Values:

TABLE 5. Register Values for GPO[0:8]'s Programming

Pin Name	Address/Values (Hex.)										Name of Signal for USER	Remarks
GPO8	Address	81	82	83	84	85	86	87	88	89		
	Value											
GPO7	Address	8A	8B	8C	8D	8E	8F	90	91	92		
	Value											
GPO6	Address	93	94	95	96	97	98	99	9A	9B		
	Value											
GPO5	Address	9C	9D	9E	9F	A0	A1	A2	A3	A4		
	Value											
GPO4	Address	A5	A6	A7	A8	A9	AA	AB	AC	AD		
	Value											
GPO3	Address	AE	AF	B0	B1	B2	B3	B4	B5	B6		
	Value											
GPO2	Address	B7	B8	B9	BA	BB	BC	BD	BE	BF		
	Value											
GPO1	Address	C0	C1	C2	C3	C4	C5	C6	C7	C8		
	Value											
GPO0	Address	C9	CA	CB	CC	CD	CE	CF	D0	D1		
	Value											

TABLE 6. Register Values for LCD Format Control

Control Register	Address/Values (Hex.)			Control Register	Address/Values (Hex.)			Remarks
Output_Format	Address	D2	D3	Output_Drive	Address	D4		
	Value				Value			
C/D_Size	Address	D5		Input_Format	Address	D6		
	Value				Value			
HBP_REG	Address	D7	D8	VBP_REG	Address	D9	DA	
	Value				Value			
Output_Enable/ Polarity_Control	Address	DB						
	Value							

Signature by Customer _____Date _____

Email ID_____

Physical Dimensions inches (millimeters) unless otherwise noted

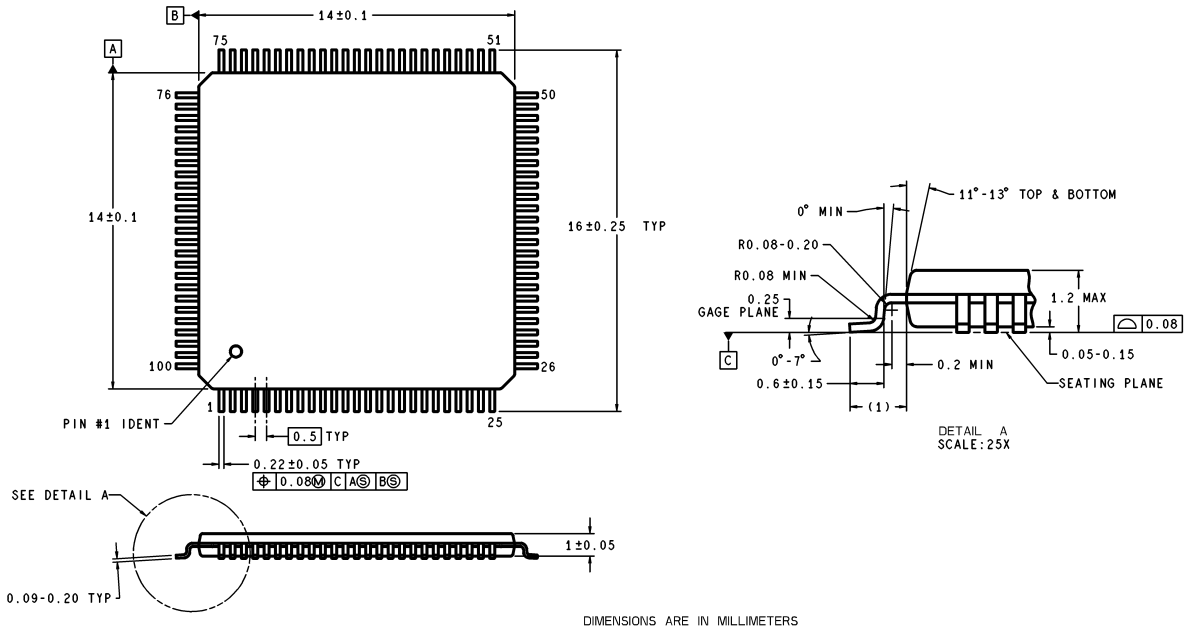

VJD100A (Rev B)

Plastic Quad Flatpak, JEDEC
NS Package Number VJD100A

LIFE SUPPORT POLICY

NATIONAL'S PRODUCTS ARE NOT AUTHORIZED FOR USE AS CRITICAL COMPONENTS IN LIFE SUPPORT DEVICES OR SYSTEMS WITHOUT THE EXPRESS WRITTEN APPROVAL OF THE PRESIDENT AND GENERAL COUNSEL OF NATIONAL SEMICONDUCTOR CORPORATION. As used herein:

1. Life support devices or systems are devices or systems which, (a) are intended for surgical implant into the body, or (b) support or sustain life, and whose failure to perform when properly used in accordance with instructions for use provided in the labeling, can be reasonably expected to result in a significant injury to the user.
2. A critical component is any component of a life support device or system whose failure to perform can be reasonably expected to cause the failure of the life support device or system, or to affect its safety or effectiveness.

National Semiconductor Corporation
Americas
Email: support@nsc.com

www.national.com

National Semiconductor Europe
Fax: +49 (0) 180-530 85 86
Email: europe.support@nsc.com
Deutsch Tel: +49 (0) 69 9508 6208
English Tel: +44 (0) 870 24 0 2171
Français Tel: +33 (0) 1 41 91 8790

National Semiconductor Asia Pacific Customer Response Group
Tel: 65-2544466
Fax: 65-2504466
Email: ap.support@nsc.com

National Semiconductor Japan Ltd.
Tel: 81-3-5639-7560
Fax: 81-3-5639-7507

National does not assume any responsibility for use of any circuitry described, no circuit patent licenses are implied and National reserves the right at any time without notice to change said circuitry and specifications.

Общество с ограниченной ответственностью «МосЧип» ИНН 7719860671 / КПП 771901001
Адрес: 105318, г.Москва, ул.Щербаковская д.3, офис 1107

Данный компонент на территории Российской Федерации

Вы можете приобрести в компании MosChip.

Для оперативного оформления запроса Вам необходимо перейти по данной ссылке:

http://moschip.ru/get-element

Вы можете разместить у нас заказ для любого Вашего проекта, будь то серийное производство или разработка единичного прибора.

В нашем ассортименте представлены ведущие мировые производители активных и пассивных электронных компонентов.

Нашей специализацией является поставка электронной компонентной базы двойного назначения, продукции таких производителей как XILINX, Intel (ex.ALTERA), Vicor, Microchip, Texas Instruments, Analog Devices, Mini-Circuits, Amphenol, Glenair.

Сотрудничество с глобальными дистрибьюторами электронных компонентов, предоставляет возможность заказывать и получать с международных складов практически любой перечень компонентов в оптимальные для Вас сроки.

На всех этапах разработки и производства наши партнеры могут получить квалифицированную поддержку опытных инженеров.

Система менеджмента качества компании отвечает требованиям в соответствии с ГОСТ Р ИСО 9001, ГОСТ РВ 0015-002 и ЭС РД 009

Офис по работе с юридическими лицами:

105318, г.Москва, ул.Щербаковская д.3, офис 1107, 1118, ДЦ «Щербаковский»

Телефон: +7 495 668-12-70 (многоканальный)

Факс: +7 495 668-12-70 (доб.304)

E-mail: info@moschip.ru

Skype отдела продаж:
moschip.ru
moschip.ru_4
moschip.ru_6
moschip.ru_9