SYMBOL DEFINITION		
A DIMENSION WITHOUT AN INSPECTION REPORT SYMBOL (20) DOES NOT REQUIRE INSPECTION. IT MAY BE CONTROLLED ON THE INDIVIDUAL COMPONENT DRAWING.	TOTAL NO OF INSPECTIONS REQUIRED	32
	LAST NO. USED	26

MISSING SYMBOLS
NO MISSING SYMBOLS

DWG STATUS					ZONE	REVISION HISTORY	AUTH	DR	APVD 1	APVD 2
DATE	STS	REV	N/P	CHG						
02APIB	R	01	-	-		ALL PARTS - RELEASED PART DRAWING	439407	AGC	AGC	RBS

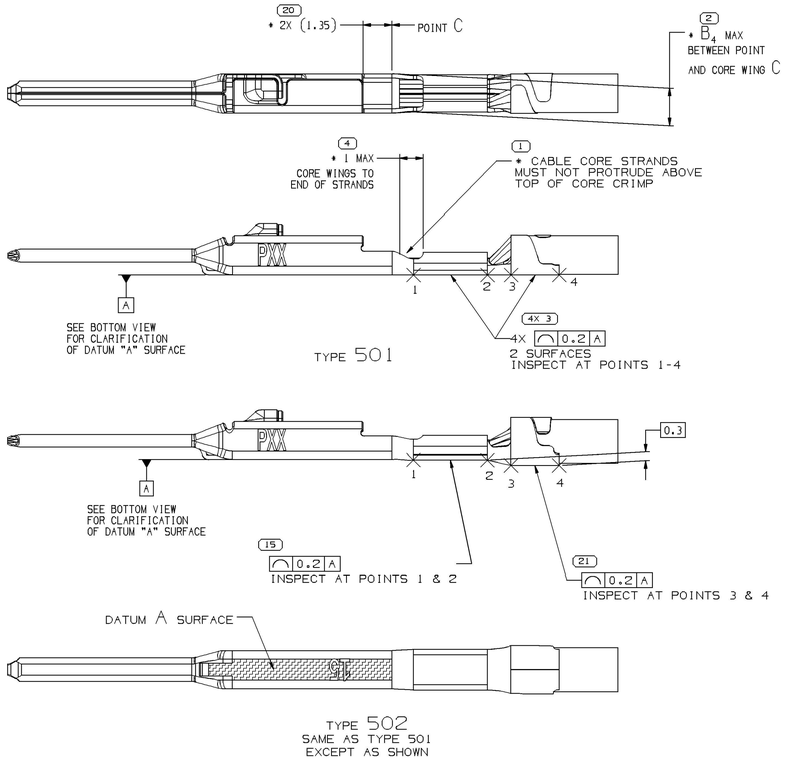

TERMINAL, CABLE ALIGNMENT & POSITION

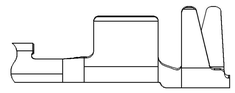

TYPE 402
SAME AS TYPE 401 EXCEPT AS SHOWN

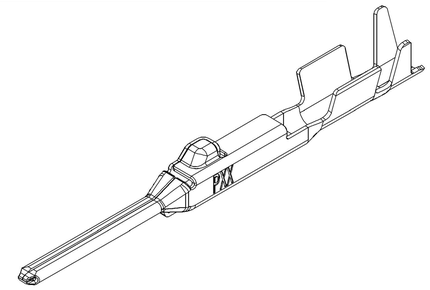

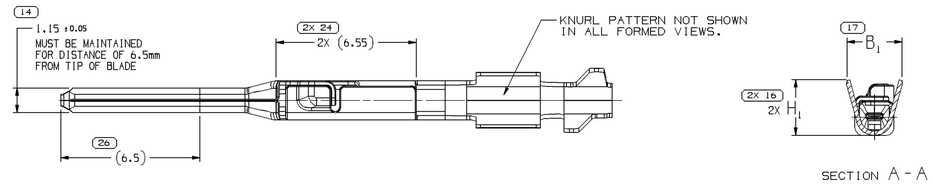

SECTION A-A

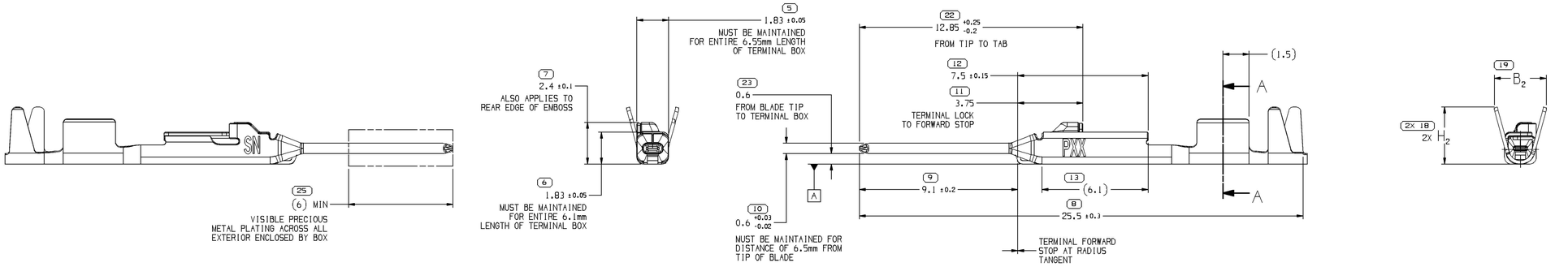

TYPE 501

NOTES

1. UNLESS OTHERWISE SPECIFIED AND/OR INDICATED:

   DIMENSIONS ARE TO FACE OF VIEW SHOWN AND AUTOMATICALLY ROUNDED BY COMPUTER FOR INSPECTION (SEE MATH MODEL FOR PRECISE DIMENSIONS). FOR ALL OTHER DIMENSIONS NOT SHOWN BUT REQUIRED FOR TOOL BUILD, SEE MATH MODEL FOR PRECISE TOOL PATH DATA.

2. FOR TYPE 401 WITH CABLE SIZES UP TO 1.9mm O.D.: MAXIMUM INSULATION CRIMP WIDTH OF 1.9mm AND HEIGHT 1.9mm; MAXIMUM CORE CRIMP WIDTH IS 1.9mm.

   FOR TYPE 401 WITH CABLE SIZES GREATER THAN 1.9mm BUT LESS THAN 2.34mm O.D.: MAXIMUM INSULATION CRIMP WIDTH OF 2.25mm AND HEIGHT 2.35mm; MAXIMUM CORE CRIMP WIDTH IS 1.9mm

   FOR TYPE 402 WITH CABLE SIZES UP TO 2.4mm O.D.: MAXIMUM INSULATION CRIMP WIDTH OF 2.6mm AND HEIGHT 2.6mm; MAXIMUM CORE CRIMP WIDTH IS 1.9mm

3. PLATING TYPE:

   I. REFLOW TIN 1.9 - 3.3 MICROMETERS THICK OVER NICKEL UNDERPLATE 0.13 - 0.5 MICROMETERS THICK.

   II. SILVER 1.0 - 2.0 MICROMETERS THICK OVER NICKEL UNDERPLATE 0.127 - 0.254 MICROMETERS THICK.

   III. MATTE TIN 1.9 - 7.0 MICROMETERS THICK OVER NICKEL UNDERPLATE 0.127 - 0.254 MICROMETERS THICK. (FOR USE WITH SELECTIVE SILVER PLATING SPECIFICATION)

   PLATING TYPE INFORMATION SHOWN ABOVE IS REFERENCE ONLY. PLATING REQUIREMENTS ARE CONTAINED IN APPLICABLE MATERIAL SPECIFICATION.

4. MAXIMUM CURRENT CAPACITY AS DEFINED BY USCAR-2 R6 SECTION 5.3.3 IS 16.5 AMPS WITH 1.5mm² COPPER CABLE.

5. * DENOTES DIMENSIONS MADE AT CUT-OFF AND CRIMP DIE

6. REFERENCE MATING COMPONENTS OR EQUIVALENTS:
   TERMINAL 35072409

7. PARTS MEET THE PERFORMANCE REQUIREMENTS OF GMW3191 JUNE 2012 AND SAE/USCAR-2 R6 REVISION FOR THE FOLLOWING CLASSIFICATIONS:

   TEMPERATURE CLASS 3 (-40° TO 125° C)
   VIBRATION CLASS I (ON BODY OR CHASSIS)
   SEALING CLASS I (UNSEALED) FOR CABLE I.D. 25 & 15
   SEALING CLASS 2 OR 3 (SEALED CONNECTOR DEPENDENT) FOR CABLE I.D. 21 & 18

8. FOR TERMINALS PACKAGED & STORED IN THE APPROVED MANNER, TARNISH ON SILVER PLATED SURFACES WILL NOT AFFECT THE PERFORMANCE OF THE PART.

9. 15 CABLE I.D. P/N IS NOT APPROVED FOR USE IN SUMITOMO CONNECTOR HOUSINGS - THE TERMINAL-CONNECTOR POLARIZATION FEATURE IN THE CONNECTOR CAVITY DOES NOT MEET REQUIREMENTS.

PART NUMBER	REV	N/P	CABLE I.D. STATUS	TYPE	MATERIAL SPECIFICATION	MATERIAL SIZE	CONTACT AREA PLATING TYPE (SEE NOTE 3)	CRIMP AREA PLATING TYPE (SEE NOTE 3)	CONTACT PLATING I.D.	CABLE I.D.	CABLE SIZE (mm²)	CABLE DIAMETER	B_1 ±0.15	B_2 ±0.25	B_4	(H_1)	(H_2)
											COPPER						
~~35091063~~	01	-	-	501	TIN PLATED COPPER ALLOY	0.2 X 29.5	I	I	SN	25	0.13 - 0.22	0.81 - 1.2	1.5	1.8	1.65	1.4	1.8
~~35091062~~	01	-	-	501	TIN PLATED COPPER ALLOY	0.2 X 29.5	I	I	SN	21	0.35 - 0.5	1.2 - 1.83	2.1	2.85	1.85	2.05	3.15
~~35091061~~	01	-	-	501	TIN PLATED COPPER ALLOY	0.2 X 29.5	I	I	SN	18	0.75 - 1.0	1.7 - 2.34	2.6	3	1.88	2.6	3.3
~~35091060~~	01	-	SEE NOTE #9	502	TIN PLATED COPPER ALLOY	0.2 X 29.5	I	I	SN	15	1.25 - 1.5	1.8 - 2.4	3.1	3.9	2.2	3.1	3.8

(5) PROCESS SENSITIVE DIMENSION	
DIMENSIONS ENCLOSED IN ( ) INDICATE REFERENCE DIMENSIONS AND NO TOLERANCE LIMITS ARE ESTABLISHED	REFERENCE
DIMENSIONAL RANGE (MM) / CHART D: FROM 0 TO 12; >12	THIRD ANGLE PROJECTION
TOLERANCE UNLESS OTHERWISE SPECIFIED: ±0.1; ±0.2; ANGULAR TOLERANCE ±2°	DO NOT SCALE; USE MATH DATA

A ——— LINE DRAWN THROUGH A PART NUMBER INDICATES THAT PHYSICAL PARTS ARE NOT AVAILABLE FOR ORDERING.

PART NUMBERS THAT DO NOT HAVE A LINE PRESENT INDICATE THAT PHYSICAL PARTS ARE AVAILABLE FOR ORDERING.

CONTACT DELPHI SALES TO ASSURE AVAILABILITY OF PARTS.

DWG TYPE: PART DRAWING

STYLE

VOLUME (CM³) | DISTR CODE

UNLESS OTHERWISE SPECIFIED
THIS DOCUMENT IS IN ACCORDANCE WITH ASME Y14.5M-1994 AS AMENDED BY THE GM GLOBAL DIMENSIONING AND TOLERANCING ADDENDUM-2001. SEPARATE PATTERNS OF FEATURES MAY BE SHARED SEPARATELY PER/PROCESS OF DATUM REFERENCES.

ALL DIMENSIONS ARE IN MILLIMETERS

DELPHI
DELPHI PACKARD ELECTRICAL/ELECTRONIC ARCHITECTURE
WARREN, OH

COPYRIGHT 2018 DELPHI CORPORATION AND/OR ITS AFFILIATES. ALL RIGHTS RESERVED.

THIS DRAWING IS THE PROPERTY OF DELPHI CORPORATION AND CONTAINS DELPHI CONFIDENTIAL INFORMATION. THE REPRODUCTION, DISTRIBUTION AND UTILIZATION OF THIS DOCUMENT OR ITS RELATED CAD MATH DATA, AS WELL AS COMMUNICATION OF ANY CONTENT TO OTHERS, WITHOUT EXPRESS AUTHORIZATION, IS PROHIBITED.

		DATE
DR		
APVD1	A. GARCIA CABELLO	02APIB
APVD2	A. GARCIA CABELLO	02APIB
APVD3	ROBERT B. SNADER	03APIB
APVD4		
APVD5		

SUBSTANCES OF CONCERN AND RECYCLED CONTENT PER DELPHI 1094001

MATERIAL: SEE CHART

DRAWING NAME: TAXI TERM M OCS 1.2

DRAWING NUMBER: 33101338

SIZE	SCALE	FRAME NO	SHEET NO	STS	REV	N/P
A0	10:1	1 OF 1	5 OF	R	01	-

Sheet 2:01013
Sheet 5:01013_33101338-CLOSD1-005 Date: 04-Apr-18 Time: 15:51
Sheet 6:Sheetsheet

Общество с ограниченной ответственностью «МосЧип» ИНН 7719860671 / КПП 771901001
Адрес: 105318, г.Москва, ул.Щербаковская д.3, офис 1107

Данный компонент на территории Российской Федерации

Вы можете приобрести в компании MosChip.

Для оперативного оформления запроса Вам необходимо перейти по данной ссылке:

http://moschip.ru/get-element

Вы можете разместить у нас заказ для любого Вашего проекта, будь то серийное производство или разработка единичного прибора.

В нашем ассортименте представлены ведущие мировые производители активных и пассивных электронных компонентов.

Нашей специализацией является поставка электронной компонентной базы двойного назначения, продукции таких производителей как XILINX, Intel (ex.ALTERA), Vicor, Microchip, Texas Instruments, Analog Devices, Mini-Circuits, Amphenol, Glenair.

Сотрудничество с глобальными дистрибьюторами электронных компонентов, предоставляет возможность заказывать и получать с международных складов практически любой перечень компонентов в оптимальные для Вас сроки.

На всех этапах разработки и производства наши партнеры могут получить квалифицированную поддержку опытных инженеров.

Система менеджмента качества компании отвечает требованиям в соответствии с ГОСТ Р ИСО 9001, ГОСТ РВ 0015-002 и ЭС РД 009

Офис по работе с юридическими лицами:

105318, г.Москва, ул.Щербаковская д.3, офис 1107, 1118, ДЦ «Щербаковский»

Телефон: +7 495 668-12-70 (многоканальный)

Факс: +7 495 668-12-70 (доб.304)

E-mail: info@moschip.ru

Skype отдела продаж:
moschip.ru
moschip.ru_4
moschip.ru_6
moschip.ru_9