- **D-C Triggered from Active-High or Active-Low Gated Logic Inputs**
- **Retriggerable for Very Long Output Pulses, Up to 100% Duty Cycle**
- **Overriding Clear Terminates Output Pulse**
- **'122 and 'LS122 Have Internal Timing Resistors**

description

These d-c triggered multivibrators feature output pulse-duration control by three methods. The basic pulse time is programmed by selection of external resistance and capacitance values (see typical application data). The '122 and 'LS122 have internal timing resistors that allow the circuits to be used with only an external capacitor, if so desired. Once triggered, the basic pulse duration may be extended by retriggering the gated low-level-active (A) or high-level-active (B) inputs, or be reduced by use of the overriding clear. Figure 1 illustrates pulse control by retriggering and early clear.

The 'LS122 and 'LS123 are provided enough Schmitt hysteresis to ensure jitter-free triggering from the B input with transition rates as slow as 0.1 millivolt per nanosecond.

The R_{int} in nominall 10 kΩ for '122 and 'LS122.

SN54122, SN54LS122 . . . J OR W PACKAGE
SN74122 . . . N PACKAGE
SN74LS122 . . . D OR N PACKAGE
(TOP VIEW) (SEE NOTES 1 THRU 4)

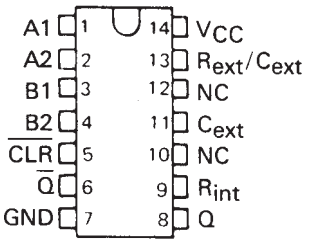

NOTES: 1. An external timing capacitor may be connected between C_{ext} and Re_{xt}/C_{ext} (positive).
2. To use the internal timing resistor of '122 or 'LS122, connect R_{int} to V_{CC}.
3. For improved pulse duration accuracy and repeatability, connect an external resistor between R_{ext}/Ce_{xt} and V_{CC} with R_{int} open-circuited.
4. To obtain variable pulse durations, connect an external variable resistance between R_{int} or R_{ext}/C_{ext} and V_{CC}.

SN54123, SN54130, SN54LS123 . . . J OR W PACKAGE
SN74123, SN74130 . . . N PACKAGE
SN74LS123 . . . D OR N PACKAGE
(TOP VIEW) (SEE NOTES 1 THRU 4)

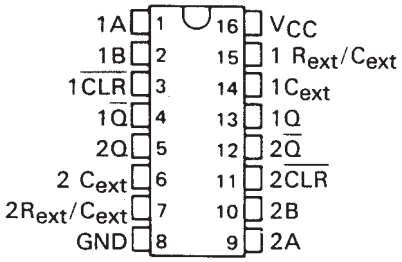

SN54LS122 . . . FK PACKAGE
(TOP VIEW) (SEE NOTES 1 THRU 4)

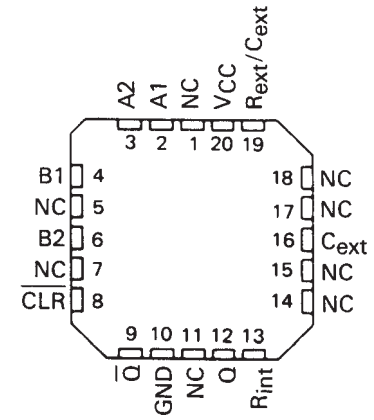

SN54LS123 . . . FK PACKAGE
(TOP VIEW) (SEE NOTES 1 THRU 4)

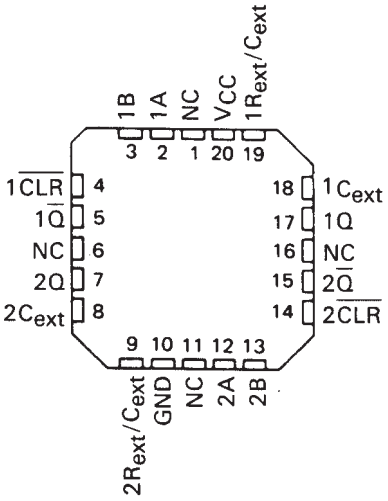

NC - No internal connection

PRODUCTION DATA information is current as of publication date. Products conform to specifications per the terms of Texas Instruments standard warranty. Production processing does not necessarily include testing of all parameters.

description (continued)

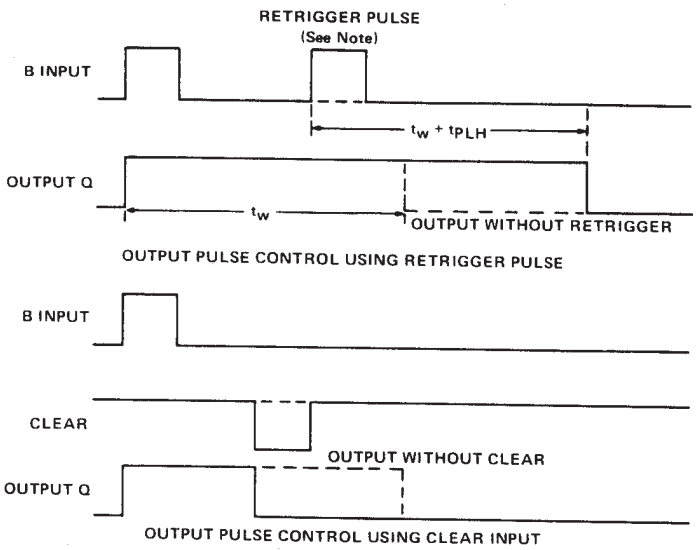

NOTE: Retrigger pulses starting before 0.22 C_{ext} (in picofrads) nanoseconds after the initial trigger pulse will be ignored and the output duration will remain unchanged.

FIGURE 1–TYPICAL INPUT/OUTPUT PULSES

'122, 'LS122
FUNCTION TABLE

INPUTS					OUTPUTS	
CLEAR	A1	A2	B1	B2	Q	$\bar{Q}$
L	X	X	X	X	L	H
X	H	H	X	X	L†	H†
X	X	X	L	X	L†	H†
X	X	X	X	L	L†	H†
H	L	X	↑	H	⎍	⎏
H	L	X	H	↑	⎍	⎏
H	X	L	↑	H	⎍	⎏
H	X	L	H	↑	⎍	⎏
H	H	↓	H	H	⎍	⎏
H	↓	↓	H	H	⎍	⎏
H	↓	H	H	H	⎍	⎏
↑	L	X	H	H	⎍	⎏
↑	X	L	H	H	⎍	⎏

See explanation of function tables on page

† These lines of the functional tables assume that the indicated steady-state conditons at the A and B inputs have been set up long enough to complete any pulse started before the set up.

'123, '130, 'LS123
FUNCTION TABLE

INPUTS			OUTPUTS	
CLEAR	A	B	Q	$\bar{Q}$
L	X	X	L	H
X	H	X	L†	H†
X	X	L	L†	H†
H	L	↑	⎍	⎏
H	↓	H	⎍	⎏
↑	L	H	⎍	⎏

logic diagram (positive logic)

'122, 'LS122

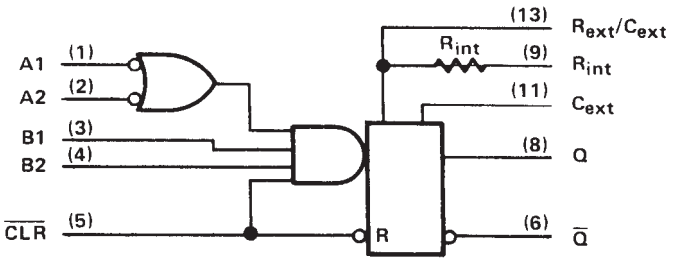

logic symbol†

'122, 'LS122

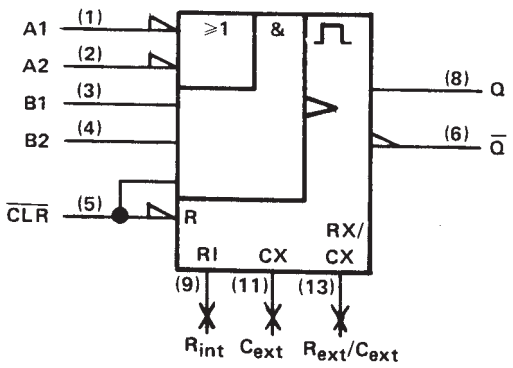

R_{int} is nominally 10 kΩ for '122 and 'LS122

logic diagram (positive logic) (each multivibrator)

'123, '130, 'LS123

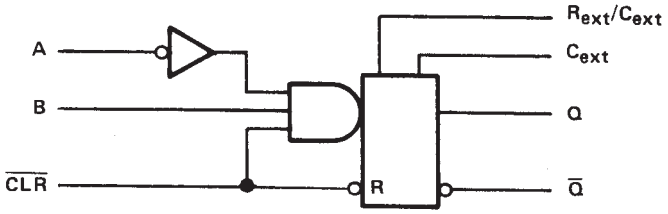

Pin numbers shown are for D, J, N, and W packages.

logic symbol†

'123, '130, 'LS123

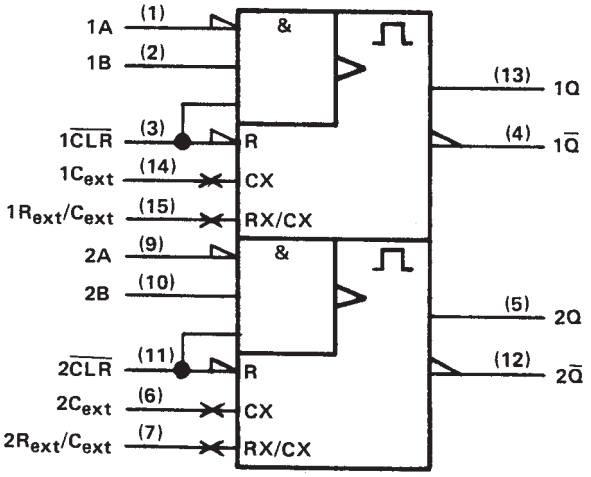

†These symbols are in accordance with ANSI/IEEE Std 91-1984 and IEC Publication 617-12.

schematics of inputs and outputs

'122, '123, '130 CIRCUITS

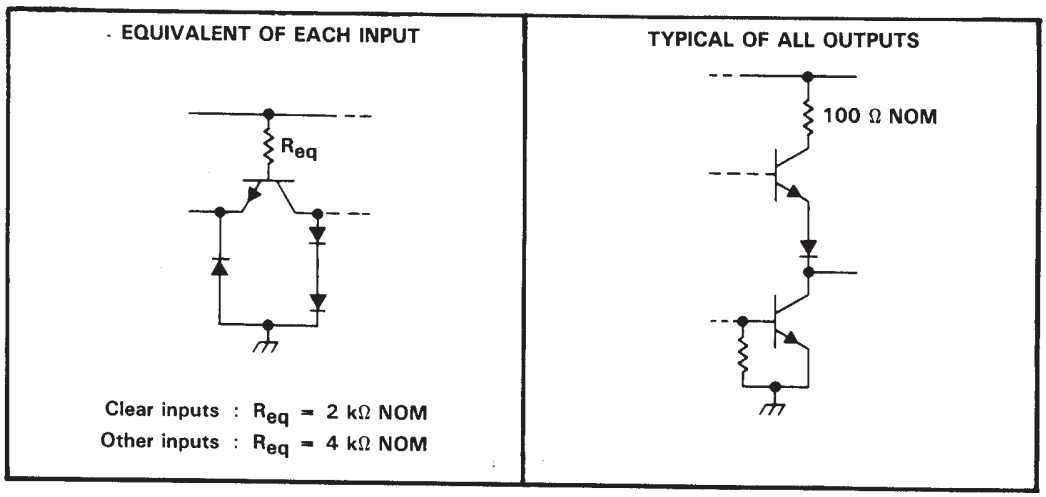

'LS122, 'LS123 CIRCUITS

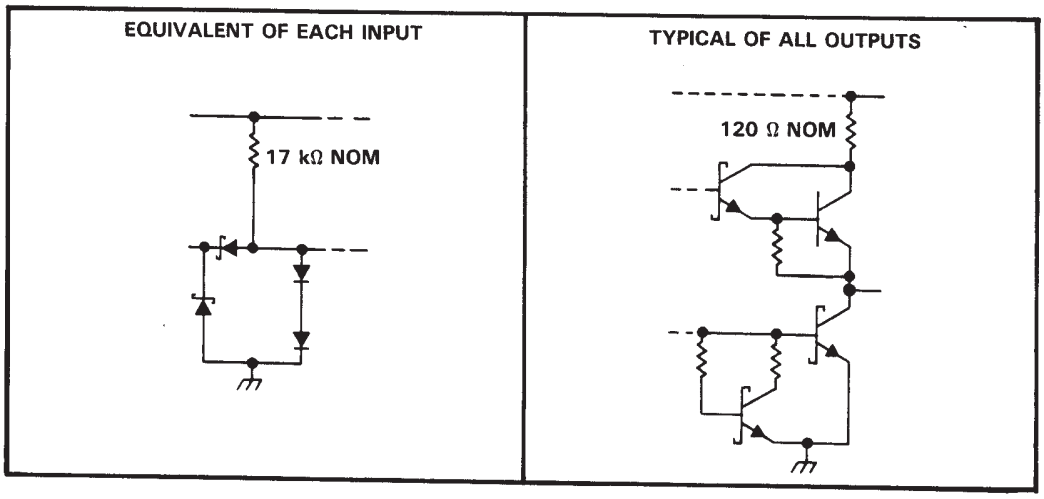

absolute maximum ratings over operating free-air temperature range (unless otherwise noted)

Supply voltage, V_{CC} (see Note 1)		7 V
Input voltage: '122, '123, '130		5.5 V
'LS122, 'LS123		7 V
Operating free-air temperature range:	SN54'	−55°C to 125°C
	SN74'	0°C to 70°C
Storage temperature range		−65°C to 150°C

NOTE 1: Voltage values are with respect to network ground terminal.

recommended operating conditions

	SN54'			SN74'			UNIT
	MIN	NOM	MAX	MIN	NOM	MAX	
Supply voltage, V_{CC}	4.5	5	5.5	4.75	5	5.25	V
High-level output current, I_{OH}			–800			–800	μA
Low-level output current, I_{OL}			16			16	mA
Pulse duration, t_w	40			40			ns
External timing resistance, R_{ext}	5		25	5		50	kΩ
External capacitance, C_{ext}	No restriction			No restriction			
Wiring capacitance at R_{ext}/C_{ext} terminal			50			50	pF
Operating free-air temperature, T_A	–55		125	0		70	°C

electrical characteristics over recommended free-air operating temperature range (unless otherwise noted)

PARAMETER			TEST CONDITIONS†	'122			'123, '130			UNIT
				MIN	TYP‡	MAX	MIN	TYP‡	MAX	
V_{IH}	High-level input voltage			2			2			V
V_{IL}	Low-level input voltage					0.8			0.8	V
V_{IK}	Input clamp voltage		V_{CC} = MIN, I_I = –12 mA			–1.5			–1.5	V
V_{OH}	High-level output voltage		V_{CC} = MIN, I_{OH} = –800 μA, See Note 5	2.4	3.4		2.4	3.4		V
V_{OL}	Low-level output voltage		V_{CC} = MIN, I_{OL} = 16 mA, See Note 5		0.2	0.4		0.2	0.4	V
I_I	Input current at maximum input voltage		V_{CC} = MAX, V_I = 5.5 V			1			1	mA
I_{IH}	High-level input current	Data inputs	V_{CC} = MAX, V_I = 2.4 V			40			40	μA
		Clear input				80			80	
I_{IL}	Low-level input current	Data inputs	V_{CC} = MAX, V_I = 0.4 V			–1.6			–1.6	mA
		Clear input				–3.2			–3.2	
I_{OS}	Short-circuit output current§		V_{CC} = MAX, See Note 5	–10		–40	–10		–40	mA
I_{CC}	Supply current (quiescent or triggered)		V_{CC} = MAX, See Notes 6 and 7		23	36		46	66	mA

† For conditions shown as MIN or MAX, use the appropriate value specified under recommended operating conditions.
‡ All typical values are at V_{CC} = 5 V, T_A = 25°C.
§ Not more than one output should be shorted at a time.

NOTES: 5. Ground C_{ext} to measure V_{OH} at Q, V_{OL} at $\overline{Q}$, or I_{OS} at Q. C_{ext} is open to measure V_{OH} at $\overline{Q}$, V_{OL} at Q, or I_{OS} at $\overline{Q}$.
6. Quiescent I_{CC} is measured (after clearing) with 4.5 V applied to all clear and A inputs, B inputs grounded, all outputs open and R_{ext} = 25 kΩ. R_{int} of '122 is open.
7. I_{CC} is measured in the triggered state with 2.4 V applied to all clear and B inputs, A inputs grounded, all outputs open, C_{ext} = 0.02 μF, and R_{ext} = 25 kΩ. R_{int} of '122 is open.

switching characteristics, V_{CC} = 5 V, T_A = 25°C, see note 8

PARAMETER¶	FROM (INPUT)	TO (OUTPUT)	TEST CONDITIONS	'122, '130			'123			UNIT
				MIN	TYP	MAX	MIN	TYP	MAX	
t_{PLH}	A	Q	C_{ext} = 0, C_L = 15 pF, R_{ext} = 5 kΩ, R_L = 400 Ω		22	33		22	33	ns
	B				19	28		19	28	
t_{PHL}	A	$\overline{Q}$			30	40		30	40	ns
	B				27	36		27	36	
t_{PHL}	Clear	Q			18	27		18	27	ns
t_{PLH}		$\overline{Q}$			30	40		30	40	
t_{wQ} (min)	A or B	Q			45	65		45	76	ns
t_{wQ}	A or B	Q	C_{ext} = 1000 pF, C_L = 15 pF, R_{ext} = 10 kΩ, R_L = 400 Ω	3.08	3.42	3.76	2.76	3.03	3.37	μs

¶ t_{PLH} = propagation delay time, low-to-high-level output
t_{PHL} = propagation delay time, high-to-low-level output
t_{wQ} = duration of pulse at output Q.
NOTE 8: Load circuits and voltage waveforms are shown in Section 1.

recommended operating conditions

	SN54LS'			SN74LS'			UNIT
	MIN	NOM	MAX	MIN	NOM	MAX	
Supply voltage, V_{CC}	4.5	5	5.5	4.75	5	5.25	V
High-level output current, I_{OH}			–400			–400	μA
Low-level output current, I_{OL}			4			8	mA
Pulse duration, t_w	40			40			ns
External timing resistance, R_{ext}	5		180	5		260	kΩ
External capacitance, C_{ext}	No restriction			No restriction			
Wiring capacitance at R_{ext}/C_{ext} terminal			50			50	pF
Operating free-air temperature, T_A	–55		125	0		70	°C

electrical characteristics over recommended operating free-air temperature range (unless otherwise noted)

PARAMETER		TEST CONDITIONS†			SN54LS'			SN74LS'			UNIT
					MIN	TYP‡	MAX	MIN	TYP‡	MAX	
V_{IH}	High-level input voltage				2			2			V
V_{IL}	Low-level input voltage						0.7			0.8	V
V_{IK}	Input clamp voltage	V_{CC} = MIN,	I_I = –18 mA				–1.5			–1.5	V
V_{OH}	High-level output voltage	V_{CC} = MIN, V_{IL} = V_{ILmax}	V_{IH} = 2 V, I_{OH} = –400 μA		2.5	3.5		2.7	3.5		V
V_{OL}	Low-level output voltage	V_{CC} = MIN, V_{IL} = V_{ILmax}	V_{IH} = 2 V,	I_{OL} = 4 mA		0.25	0.4		0.25	0.4	V
				I_{OL} = 8 mA					0.35	0.5	
I_I	Input current at maximum input voltage	V_{CC} = MAX,	V_I = 7 V				0.1			0.1	mA
I_{IH}	High-level input current	V_{CC} = MAX,	V_I = 2.7 V				20			20	μA
I_{IL}	Low-level input current	V_{CC} = MAX,	V_I = 0.4 V				–0.4			–0.4	mA
I_{OS}	Short-circuit output current§	V_{CC} = MAX			–20		–100	–20		–100	mA
I_{CC}	Supply current (quiescent or triggered)	V_{CC} = MAX,	See Note 13	'LS122		6	11		6	11	mA
				'LS123		12	20		12	20	

†For conditions shown as MIN or MAX, use the appropriate value specified under recommended operating conditions.
‡All typical values are at V_{CC} = 5 V, T_A = 25°C.
§Not more than one output should be shorted at a time and duration of the short-circuit should not exceed one second.
NOTES: 12. To measure V_{OH} at Q, V_{OL} at Q, or I_{OS} at Q, ground R_{ext}/C_{ext}, apply 2 V to B and clear, and pulse A from 2 V to 0 V.
13. With all outputs open and 4.5 V applied to all data and clear inputs. I_{CC} is measured after a momentary ground, then 4.5 V, is applied to A or B inputs.

switching characteristics, V_{CC} = 5 V, T_A = 25°C (see note 8)

PARAMETER¶	FROM (INPUT)	TO (OUTPUT)	TEST CONDITIONS		MIN	TYP	MAX	UNIT
t_{PLH}	A	Q	C_{ext} = 0, C_L = 15 pF,	R_{ext} = 5 kΩ, R_L = 2 kΩ		23	33	ns
	B					23	44	
t_{PHL}	A	$\overline{Q}$				32	45	ns
	B					34	56	
t_{PHL}	Clear	Q				20	27	ns
t_{PLH}		$\overline{Q}$				28	45	
t_{wQ} (min)	A or B	Q				116	200	ns
t_{wQ}	A or B	Q	C_{ext} = 1000 pF, C_L = 15 pF,	R_{ext} = 10 kΩ, R_L = 2 kΩ	4	4.5	5	μs

¶t_{PLH} = propagation delay time, low-to-high-level output
t_{PHL} = propagation delay time, high-to-low-level output
t_{wQ} = duration of pulse at output Q.
NOTE 8: Load circuits and voltage waveforms are shown in Section 1.

TYPICAL APPLICATION DATA FOR '122, '123, '130

For pulse durations when $C_{ext} \leq 1000$ pF, see Figure 4.

The output pulse duration is primarily a function of the external capacitor and resistor. For $C_{ext} > 1000$ pF, the output pulse duration (t_w) is defined as:

$$t_w = K \cdot R_T \cdot C_{ext}\left(1 + \frac{0.7}{R_T}\right)$$

where

K is 0.32 for '122, 0.28 for '123 and '130

R_T is in kΩ (internal or external timing resistance.)

C_{ext} is in pF

t_w is in ns

To prevent reverse voltage across C_{ext}, it is recommended that the method shown in Figure 2 be employed when using electrolytic capacitors and in applications utilizing the clear function. In all applications using the diode, the pulse duration is:

$$t_w = K_D \cdot R_T \cdot C_{ext}\left(1 + \frac{0.7}{R_T}\right)$$

K_D is 0.28 for '122, 0.25 for '123 and '130

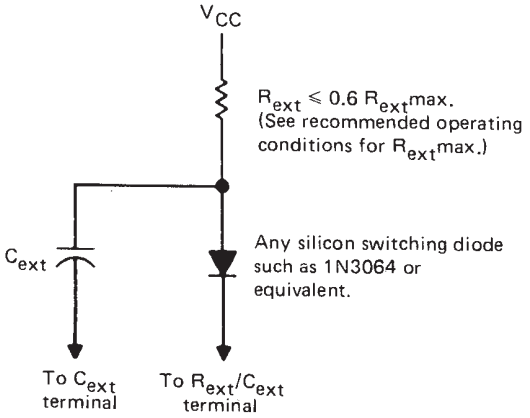

TIMING COMPONENT CONNECTIONS WHEN $C_{ext} > 1000$ pF AND CLEAR IS USED

FIGURE 2

Applications requiring more precise pulse durations (up to 28 seconds) and not requiring the clear feature can best be satisfied with the '121.

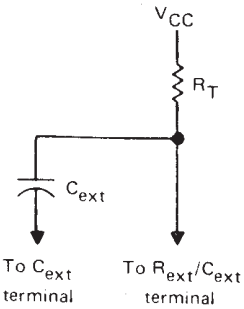

TIMING COMPONENT CONNECTIONS

FIGURE 3

TYPICAL OUTPUT PULSE DURATION
vs
EXTERNAL TIMING CAPACITANCE

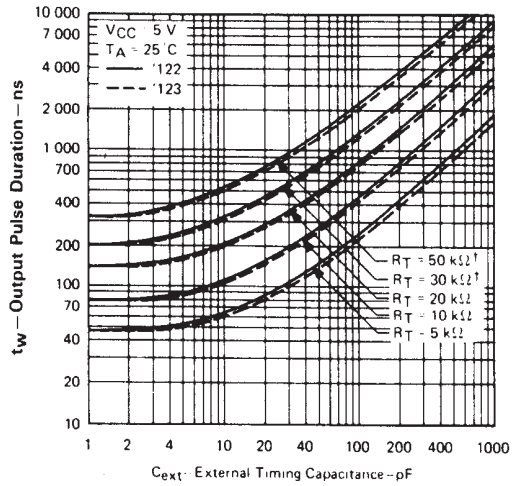

FIGURE 4

†These values of resistance exceed the maximum recommended for use over the full temperature range of the SN54' circuits.

TYPICAL APPLICATION DATA FOR 'LS122, 'LS123

The basic output pulse duration is essentially determined by the values of external capacitance and timing resistance. For pulse durations when $C_{ext} \leq 1000$ pF, use Figure 6, or use Figure 7 where the pulse duration may be defined as:

$$t_w = K \cdot R_T \cdot C_{ext}$$

When $C_{ext} \geq 1\ \mu F$, the output pulse width is defined as:

$$t_w = 0.33 \cdot R_T \cdot C_{ext}$$

For the above two equations, as applicable;

K is multiplier factor, see Figure 7
R_T is in kΩ (internal or external timing resistance)
C_{ext} is in pF
t_w is in ns

For maximum noise immunity, system ground should be applied to the C_{ext} node, even though the C_{ext} node is already tied to the ground lead internally. Due to the timing scheme used by the 'LS122 and 'LS123, a switching diode is not required to prevent reverse biasing when using electolytic capacitors.

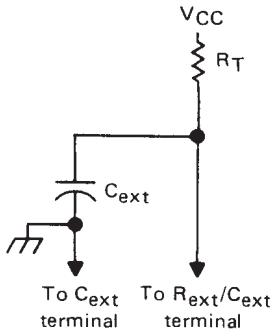

TIMING COMPONENT CONNECTIONS

FIGURE 5

'LS122, 'LS123
TYPICAL OUTPUT PULSE DURATION
vs
EXTERNAL TIMING CAPACITANCE

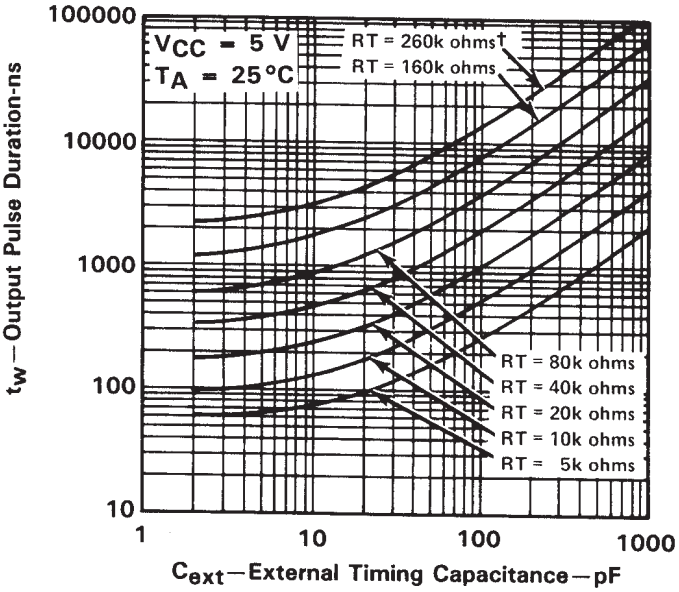

†This value of resistance exceeds the maximum recommended for use over the full temperature range of the SN54LS circuits.

FIGURE 6

TYPICAL APPLICATION DATA FOR 'LS122, 'LS123†

MULTIPLIER FACTOR
vs
EXTERNAL CAPACITOR

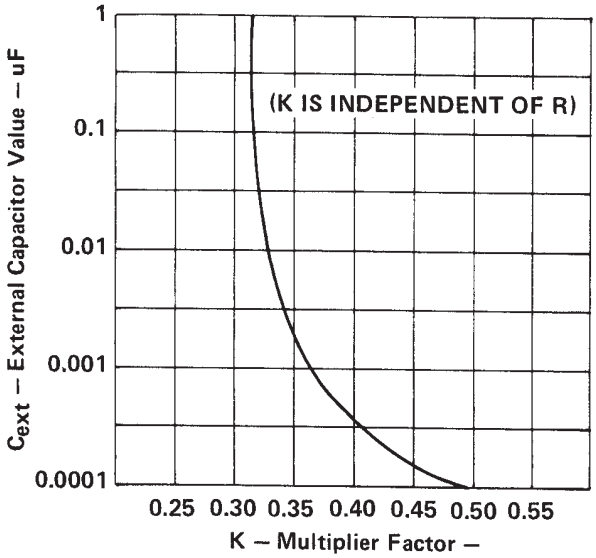

FIGURE 7

DISTRIBUTION OF UNITS
vs
OUTPUT PULSE DURATION

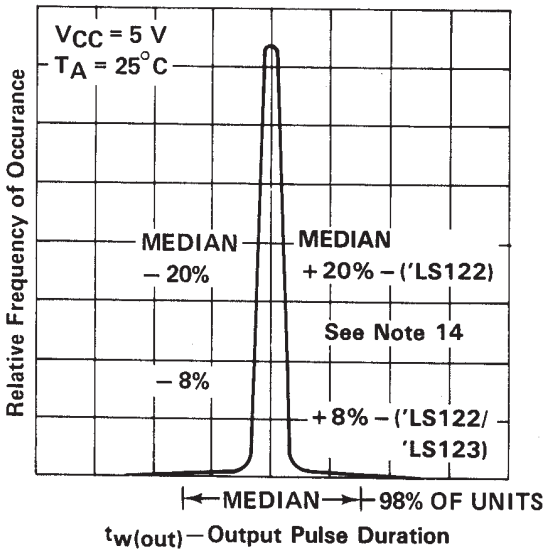

FIGURE 8

VARIATION IN OUTPUT PULSE DURATION
vs
SUPPLY VOLTAGE

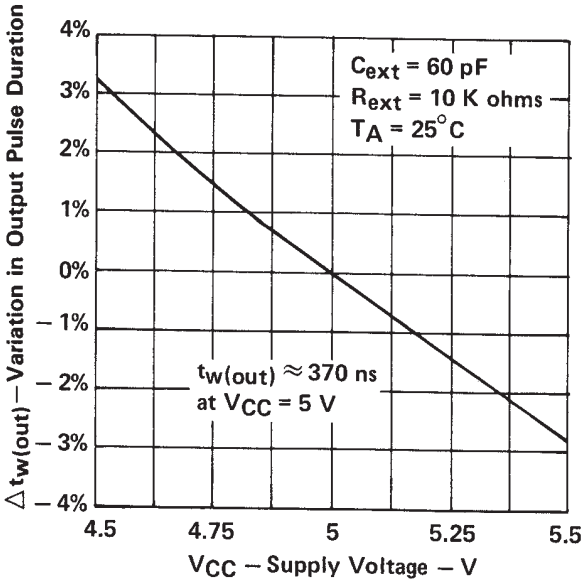

FIGURE 9

VARIATION IN OUTPUT PULSE DURATION
vs
FREE-AIR TEMPERATURE

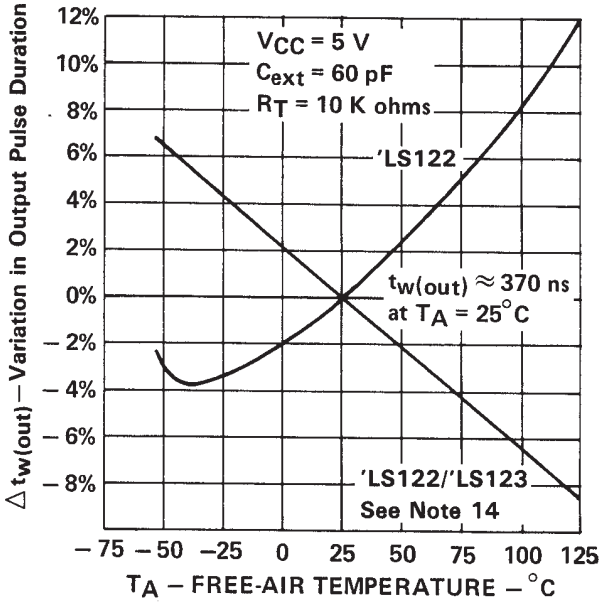

FIGURE 10

NOTE 14: For the 'LS122, the internal timing resistor, R_{int} was used. For the 'LS122/123, an external timing resistor was used for R_T.

†Data for temperatures below 0°C and above 70°C and for suply voltages below 4.75 V and above 5.25 V are applicable for SN54LS122 and SN54LS123 only.

PACKAGING INFORMATION

Orderable Device	Status (1)	Package Type	Package Drawing	Pins	Package Qty	Eco Plan (2)	Lead/Ball Finish	MSL Peak Temp (3)	Op Temp (°C)	Device Marking (4/5)	Samples
5962-7603901VEA	ACTIVE	CDIP	J	16	1	TBD	A42	N / A for Pkg Type	-55 to 125	5962-7603901VE A SNV54LS123J	Samples
5962-7603901VFA	ACTIVE	CFP	W	16	1	TBD	A42	N / A for Pkg Type	-55 to 125	5962-7603901VF A SNV54LS123W	Samples
7603901EA	ACTIVE	CDIP	J	16	1	TBD	A42	N / A for Pkg Type	-55 to 125	7603901EA SNJ54LS123J	Samples
7603901FA	ACTIVE	CFP	W	16	1	TBD	A42	N / A for Pkg Type	-55 to 125	7603901FA SNJ54LS123W	Samples
JM38510/01203BEA	ACTIVE	CDIP	J	16	1	TBD	A42	N / A for Pkg Type	-55 to 125	JM38510/ 01203BEA	Samples
JM38510/31401B2A	ACTIVE	LCCC	FK	20	1	TBD	POST-PLATE	N / A for Pkg Type	-55 to 125	JM38510/ 31401B2A	Samples
JM38510/31401BEA	ACTIVE	CDIP	J	16	1	TBD	A42	N / A for Pkg Type	-55 to 125	JM38510/ 31401BEA	Samples
JM38510/31401BFA	ACTIVE	CFP	W	16	1	TBD	A42	N / A for Pkg Type	-55 to 125	JM38510/ 31401BFA	Samples
M38510/01203BEA	ACTIVE	CDIP	J	16	1	TBD	A42	N / A for Pkg Type	-55 to 125	JM38510/ 01203BEA	Samples
M38510/31401B2A	ACTIVE	LCCC	FK	20	1	TBD	POST-PLATE	N / A for Pkg Type	-55 to 125	JM38510/ 31401B2A	Samples
M38510/31401BEA	ACTIVE	CDIP	J	16	1	TBD	A42	N / A for Pkg Type	-55 to 125	JM38510/ 31401BEA	Samples
M38510/31401BFA	ACTIVE	CFP	W	16	1	TBD	A42	N / A for Pkg Type	-55 to 125	JM38510/ 31401BFA	Samples
SN54122J	OBSOLETE	CDIP	J	14		TBD	Call TI	Call TI	-55 to 125		
SN54123J	ACTIVE	CDIP	J	16	1	TBD	A42	N / A for Pkg Type	-55 to 125	SN54123J	Samples
SN54LS123J	ACTIVE	CDIP	J	16	1	TBD	A42	N / A for Pkg Type	-55 to 125	SN54LS123J	Samples
SN74122N	OBSOLETE	PDIP	N	14		TBD	Call TI	Call TI	0 to 70		
SN74123N	NRND	PDIP	N	16	25	Pb-Free (RoHS)	CU NIPDAU	N / A for Pkg Type	0 to 70	SN74123N	
SN74123N3	OBSOLETE	PDIP	N	16		TBD	Call TI	Call TI	0 to 70		

Orderable Device	Status (1)	Package Type	Package Drawing	Pins	Package Qty	Eco Plan (2)	Lead/Ball Finish	MSL Peak Temp (3)	Op Temp (°C)	Device Marking (4/5)	Samples
SN74123NE4	NRND	PDIP	N	16	25	Pb-Free (RoHS)	CU NIPDAU	N / A for Pkg Type	0 to 70	SN74123N	
SN74LS122D	ACTIVE	SOIC	D	14	50	Green (RoHS & no Sb/Br)	CU NIPDAU	Level-1-260C-UNLIM	0 to 70	LS122	Samples
SN74LS122DE4	ACTIVE	SOIC	D	14	50	Green (RoHS & no Sb/Br)	CU NIPDAU	Level-1-260C-UNLIM	0 to 70	LS122	Samples
SN74LS122DG4	ACTIVE	SOIC	D	14	50	Green (RoHS & no Sb/Br)	CU NIPDAU	Level-1-260C-UNLIM	0 to 70	LS122	Samples
SN74LS122DR	ACTIVE	SOIC	D	14	2500	Green (RoHS & no Sb/Br)	CU NIPDAU	Level-1-260C-UNLIM	0 to 70	LS122	Samples
SN74LS122DRE4	ACTIVE	SOIC	D	14	2500	Green (RoHS & no Sb/Br)	CU NIPDAU	Level-1-260C-UNLIM	0 to 70	LS122	Samples
SN74LS122DRG4	ACTIVE	SOIC	D	14	2500	Green (RoHS & no Sb/Br)	CU NIPDAU	Level-1-260C-UNLIM	0 to 70	LS122	Samples
SN74LS122N	ACTIVE	PDIP	N	14	25	Pb-Free (RoHS)	CU NIPDAU	N / A for Pkg Type	0 to 70	SN74LS122N	Samples
SN74LS122N3	OBSOLETE	PDIP	N	14		TBD	Call TI	Call TI	0 to 70		
SN74LS122NE4	ACTIVE	PDIP	N	14	25	Pb-Free (RoHS)	CU NIPDAU	N / A for Pkg Type	0 to 70	SN74LS122N	Samples
SN74LS122NSR	ACTIVE	SO	NS	14	2000	Green (RoHS & no Sb/Br)	CU NIPDAU	Level-1-260C-UNLIM	0 to 70	74LS122	Samples
SN74LS122NSRE4	ACTIVE	SO	NS	14	2000	Green (RoHS & no Sb/Br)	CU NIPDAU	Level-1-260C-UNLIM	0 to 70	74LS122	Samples
SN74LS122NSRG4	ACTIVE	SO	NS	14	2000	Green (RoHS & no Sb/Br)	CU NIPDAU	Level-1-260C-UNLIM	0 to 70	74LS122	Samples
SN74LS123D	ACTIVE	SOIC	D	16	40	Green (RoHS & no Sb/Br)	CU NIPDAU	Level-1-260C-UNLIM	0 to 70	LS123	Samples
SN74LS123DE4	ACTIVE	SOIC	D	16	40	Green (RoHS & no Sb/Br)	CU NIPDAU	Level-1-260C-UNLIM	0 to 70	LS123	Samples
SN74LS123DG4	ACTIVE	SOIC	D	16	40	Green (RoHS & no Sb/Br)	CU NIPDAU	Level-1-260C-UNLIM	0 to 70	LS123	Samples
SN74LS123DR	ACTIVE	SOIC	D	16	2500	Green (RoHS & no Sb/Br)	CU NIPDAU	Level-1-260C-UNLIM	0 to 70	LS123	Samples
SN74LS123DRE4	ACTIVE	SOIC	D	16	2500	Green (RoHS & no Sb/Br)	CU NIPDAU	Level-1-260C-UNLIM	0 to 70	LS123	Samples

Orderable Device	Status (1)	Package Type	Package Drawing	Pins	Package Qty	Eco Plan (2)	Lead/Ball Finish	MSL Peak Temp (3)	Op Temp (°C)	Device Marking (4/5)	Samples
SN74LS123DRG4	ACTIVE	SOIC	D	16	2500	Green (RoHS & no Sb/Br)	CU NIPDAU	Level-1-260C-UNLIM	0 to 70	LS123	Samples
SN74LS123J	OBSOLETE	CDIP	J	16		TBD	Call TI	Call TI	0 to 70		
SN74LS123N	ACTIVE	PDIP	N	16	25	Pb-Free (RoHS)	CU NIPDAU	N / A for Pkg Type	0 to 70	SN74LS123N	Samples
SN74LS123N3	OBSOLETE	PDIP	N	16		TBD	Call TI	Call TI	0 to 70		
SN74LS123NE4	ACTIVE	PDIP	N	16	25	Pb-Free (RoHS)	CU NIPDAU	N / A for Pkg Type	0 to 70	SN74LS123N	Samples
SN74LS123NSR	ACTIVE	SO	NS	16	2000	Green (RoHS & no Sb/Br)	CU NIPDAU	Level-1-260C-UNLIM	0 to 70	74LS123	Samples
SN74LS123NSRG4	ACTIVE	SO	NS	16	2000	Green (RoHS & no Sb/Br)	CU NIPDAU	Level-1-260C-UNLIM	0 to 70	74LS123	Samples
SNJ54122J	OBSOLETE	CDIP	J	14		TBD	Call TI	Call TI	-55 to 125		
SNJ54123J	ACTIVE	CDIP	J	16	1	TBD	A42	N / A for Pkg Type	-55 to 125	SNJ54123J	Samples
SNJ54123W	ACTIVE	CFP	W	16	1	TBD	A42	N / A for Pkg Type	-55 to 125	SNJ54123W	Samples
SNJ54LS123FK	ACTIVE	LCCC	FK	20	1	TBD	POST-PLATE	N / A for Pkg Type	-55 to 125	SNJ54LS 123FK	Samples
SNJ54LS123J	ACTIVE	CDIP	J	16	1	TBD	A42	N / A for Pkg Type	-55 to 125	7603901EA SNJ54LS123J	Samples
SNJ54LS123W	ACTIVE	CFP	W	16	1	TBD	A42	N / A for Pkg Type	-55 to 125	7603901FA SNJ54LS123W	Samples

(1) The marketing status values are defined as follows:
ACTIVE: Product device recommended for new designs.
LIFEBUY: TI has announced that the device will be discontinued, and a lifetime-buy period is in effect.
NRND: Not recommended for new designs. Device is in production to support existing customers, but TI does not recommend using this part in a new design.
PREVIEW: Device has been announced but is not in production. Samples may or may not be available.
OBSOLETE: TI has discontinued the production of the device.

(2) Eco Plan - The planned eco-friendly classification: Pb-Free (RoHS), Pb-Free (RoHS Exempt), or Green (RoHS & no Sb/Br) - please check http://www.ti.com/productcontent for the latest availability information and additional product content details.
TBD: The Pb-Free/Green conversion plan has not been defined.
Pb-Free (RoHS): TI's terms "Lead-Free" or "Pb-Free" mean semiconductor products that are compatible with the current RoHS requirements for all 6 substances, including the requirement that lead not exceed 0.1% by weight in homogeneous materials. Where designed to be soldered at high temperatures, TI Pb-Free products are suitable for use in specified lead-free processes.
Pb-Free (RoHS Exempt): This component has a RoHS exemption for either 1) lead-based flip-chip solder bumps used between the die and package, or 2) lead-based die adhesive used between the die and leadframe. The component is otherwise considered Pb-Free (RoHS compatible) as defined above.

Green (RoHS & no Sb/Br): TI defines "Green" to mean Pb-Free (RoHS compatible), and free of Bromine (Br) and Antimony (Sb) based flame retardants (Br or Sb do not exceed 0.1% by weight in homogeneous material)

(3) MSL, Peak Temp. -- The Moisture Sensitivity Level rating according to the JEDEC industry standard classifications, and peak solder temperature.

(4) There may be additional marking, which relates to the logo, the lot trace code information, or the environmental category on the device.

(5) Multiple Device Markings will be inside parentheses. Only one Device Marking contained in parentheses and separated by a "~" will appear on a device. If a line is indented then it is a continuation of the previous line and the two combined represent the entire Device Marking for that device.

Important Information and Disclaimer: The information provided on this page represents TI's knowledge and belief as of the date that it is provided. TI bases its knowledge and belief on information provided by third parties, and makes no representation or warranty as to the accuracy of such information. Efforts are underway to better integrate information from third parties. TI has taken and continues to take reasonable steps to provide representative and accurate information but may not have conducted destructive testing or chemical analysis on incoming materials and chemicals. TI and TI suppliers consider certain information to be proprietary, and thus CAS numbers and other limited information may not be available for release.

In no event shall TI's liability arising out of such information exceed the total purchase price of the TI part(s) at issue in this document sold by TI to Customer on an annual basis.

OTHER QUALIFIED VERSIONS OF SN54122, SN54123, SN54LS123, SN54LS123-SP, SN74122, SN74123, SN74LS123 :

- Catalog: SN74122, SN74123, SN74LS123, SN54LS123
- Military: SN54122, SN54123, SN54LS123
- Space: SN54LS123-SP

NOTE: Qualified Version Definitions:

- Catalog - TI's standard catalog product
- Military - QML certified for Military and Defense Applications
- Space - Radiation tolerant, ceramic packaging and qualified for use in Space-based application

TAPE AND REEL INFORMATION

REEL DIMENSIONS

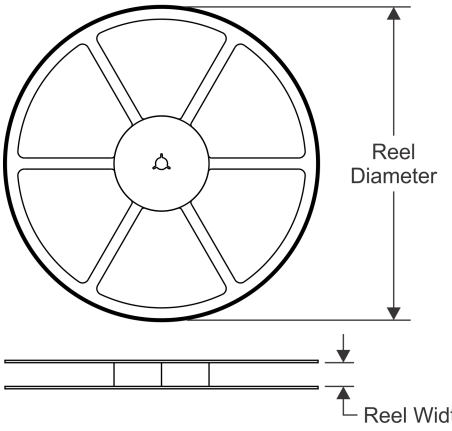

TAPE DIMENSIONS

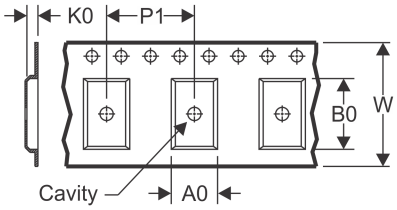

A0	Dimension designed to accommodate the component width
B0	Dimension designed to accommodate the component length
K0	Dimension designed to accommodate the component thickness
W	Overall width of the carrier tape
P1	Pitch between successive cavity centers

QUADRANT ASSIGNMENTS FOR PIN 1 ORIENTATION IN TAPE

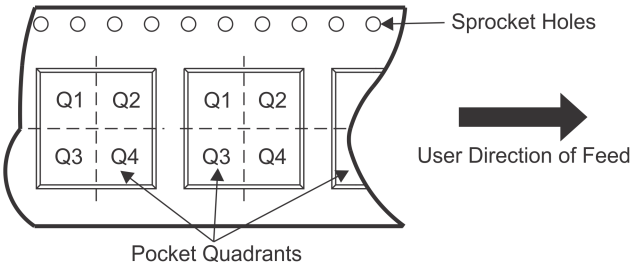

*All dimensions are nominal

Device	Package Type	Package Drawing	Pins	SPQ	Reel Diameter (mm)	Reel Width W1 (mm)	A0 (mm)	B0 (mm)	K0 (mm)	P1 (mm)	W (mm)	Pin1 Quadrant
SN74LS122DR	SOIC	D	14	2500	330.0	16.4	6.5	9.0	2.1	8.0	16.0	Q1
SN74LS122NSR	SO	NS	14	2000	330.0	16.4	8.2	10.5	2.5	12.0	16.0	Q1
SN74LS123DR	SOIC	D	16	2500	330.0	16.4	6.5	10.3	2.1	8.0	16.0	Q1

TAPE AND REEL BOX DIMENSIONS

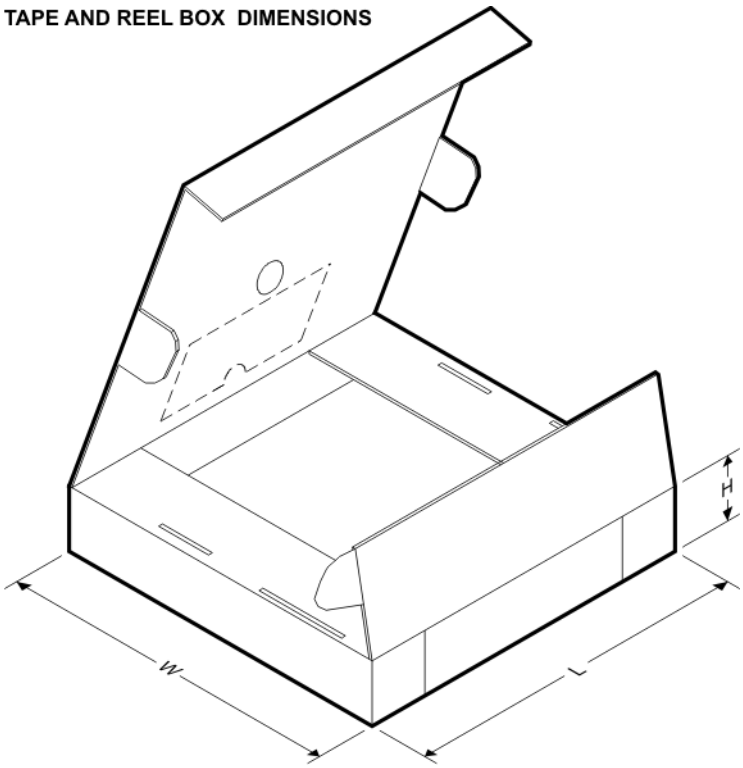

*All dimensions are nominal

Device	Package Type	Package Drawing	Pins	SPQ	Length (mm)	Width (mm)	Height (mm)
SN74LS122DR	SOIC	D	14	2500	367.0	367.0	38.0
SN74LS122NSR	SO	NS	14	2000	367.0	367.0	38.0
SN74LS123DR	SOIC	D	16	2500	333.2	345.9	28.6

J (R–GDIP–T**) CERAMIC DUAL IN–LINE PACKAGE

14 LEADS SHOWN

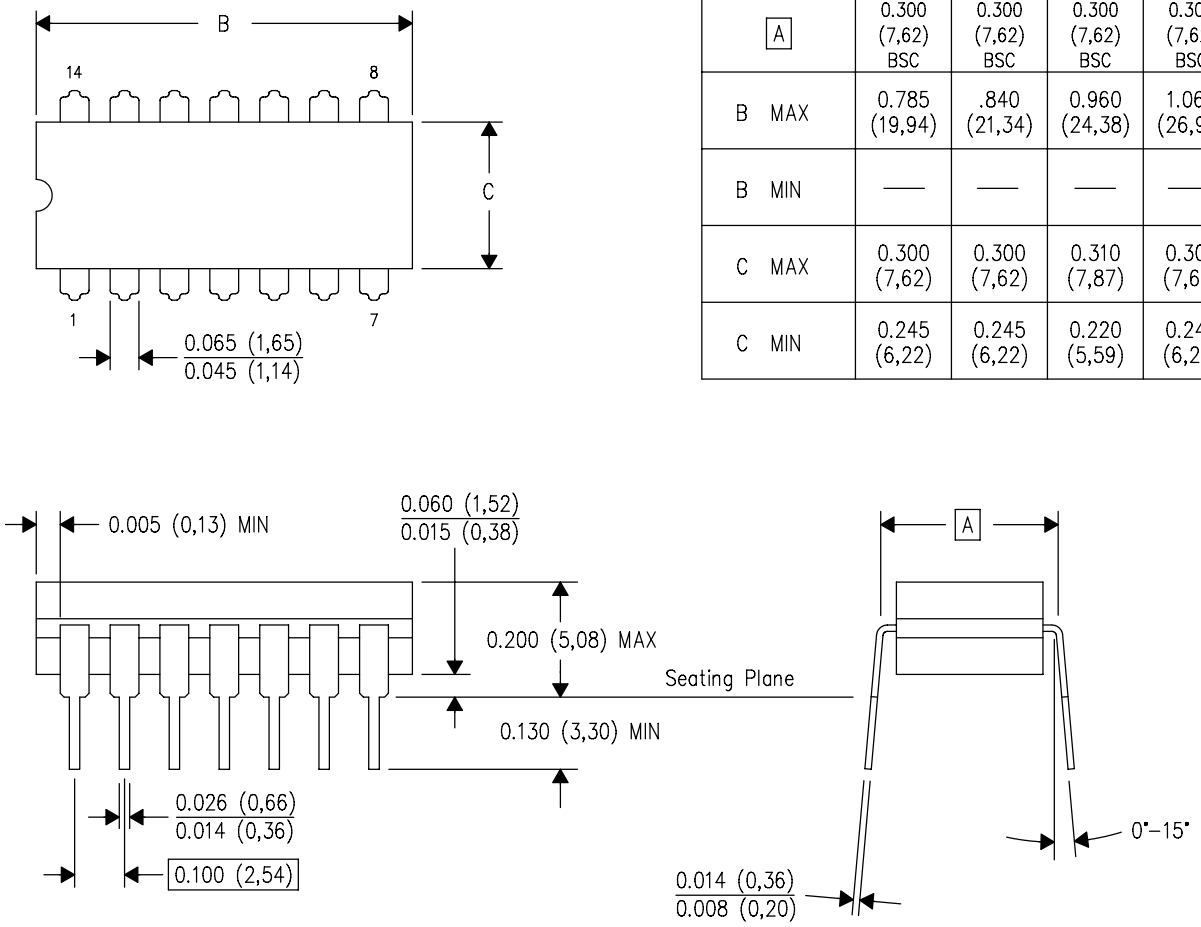

DIM \ PINS **	14	16	18	20
A	0.300 (7,62) BSC	0.300 (7,62) BSC	0.300 (7,62) BSC	0.300 (7,62) BSC
B MAX	0.785 (19,94)	.840 (21,34)	0.960 (24,38)	1.060 (26,92)
B MIN	—	—	—	—
C MAX	0.300 (7,62)	0.300 (7,62)	0.310 (7,87)	0.300 (7,62)
C MIN	0.245 (6,22)	0.245 (6,22)	0.220 (5,59)	0.245 (6,22)

4040083/F 03/03

NOTES:
- A. All linear dimensions are in inches (millimeters).
- B. This drawing is subject to change without notice.
- C. This package is hermetically sealed with a ceramic lid using glass frit.
- D. Index point is provided on cap for terminal identification only on press ceramic glass frit seal only.
- E. Falls within MIL STD 1835 GDIP1–T14, GDIP1–T16, GDIP1–T18 and GDIP1–T20.

W (R–GDFP–F16) CERAMIC DUAL FLATPACK

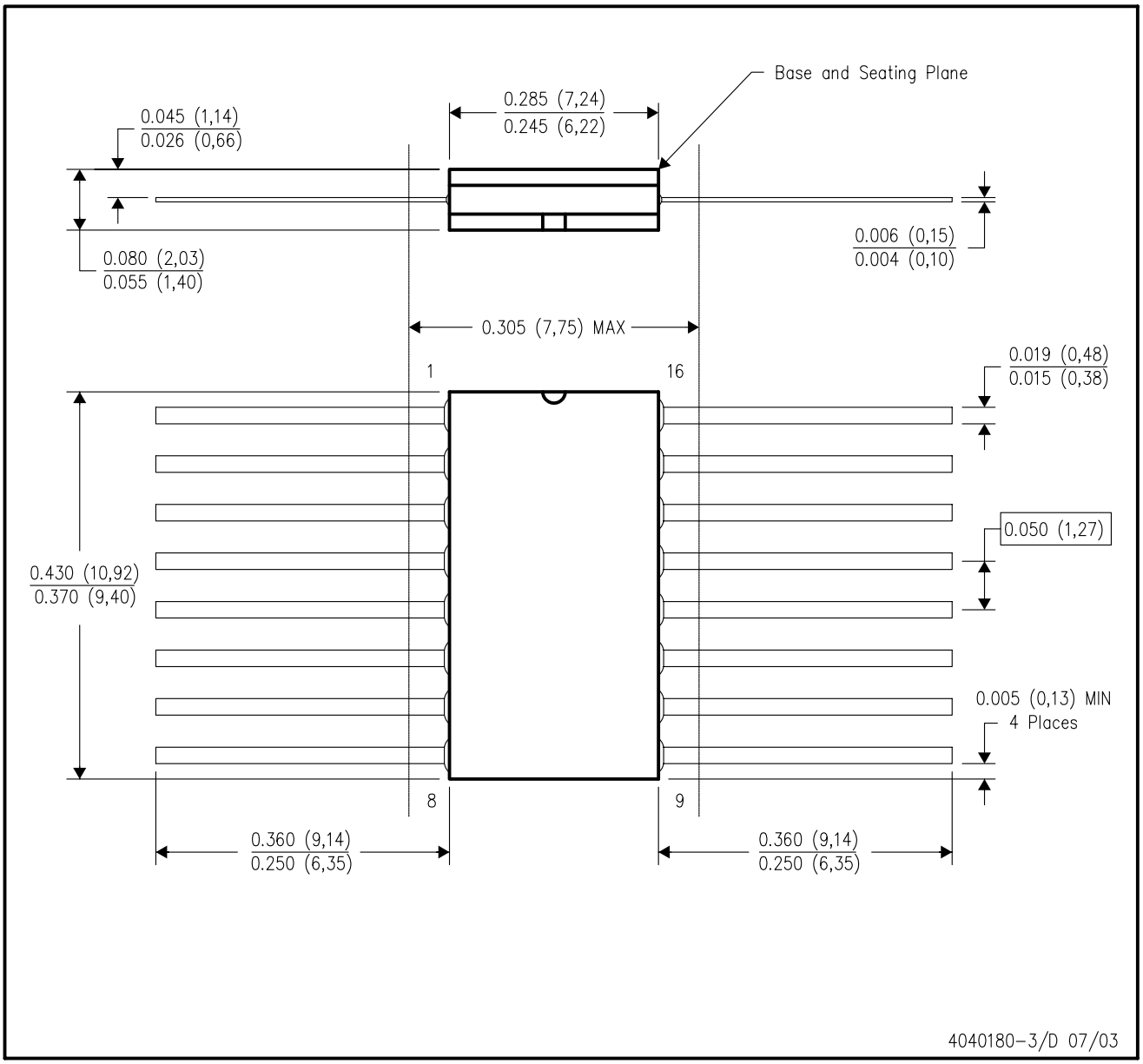

NOTES:
A. All linear dimensions are in inches (millimeters).
B. This drawing is subject to change without notice.
C. This package can be hermetically sealed with a ceramic lid using glass frit.
D. Index point is provided on cap for terminal identification only.
E. Falls within MIL STD 1835 GDFP1–F16 and JEDEC MO–092AC

FK (S–CQCC–N**) LEADLESS CERAMIC CHIP CARRIER

28 TERMINAL SHOWN

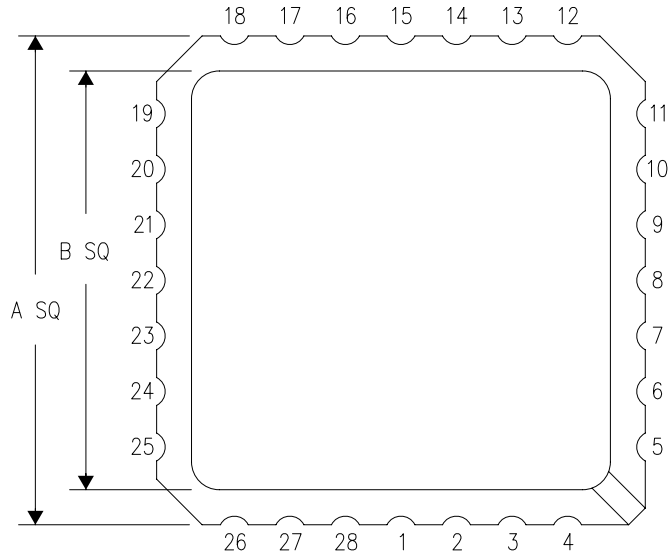

NO. OF TERMINALS **	A		B	
	MIN	MAX	MIN	MAX
20	0.342 (8,69)	0.358 (9,09)	0.307 (7,80)	0.358 (9,09)
28	0.442 (11,23)	0.458 (11,63)	0.406 (10,31)	0.458 (11,63)
44	0.640 (16,26)	0.660 (16,76)	0.495 (12,58)	0.560 (14,22)
52	0.740 (18,78)	0.761 (19,32)	0.495 (12,58)	0.560 (14,22)
68	0.938 (23,83)	0.962 (24,43)	0.850 (21,6)	0.858 (21,8)
84	1.141 (28,99)	1.165 (29,59)	1.047 (26,6)	1.063 (27,0)

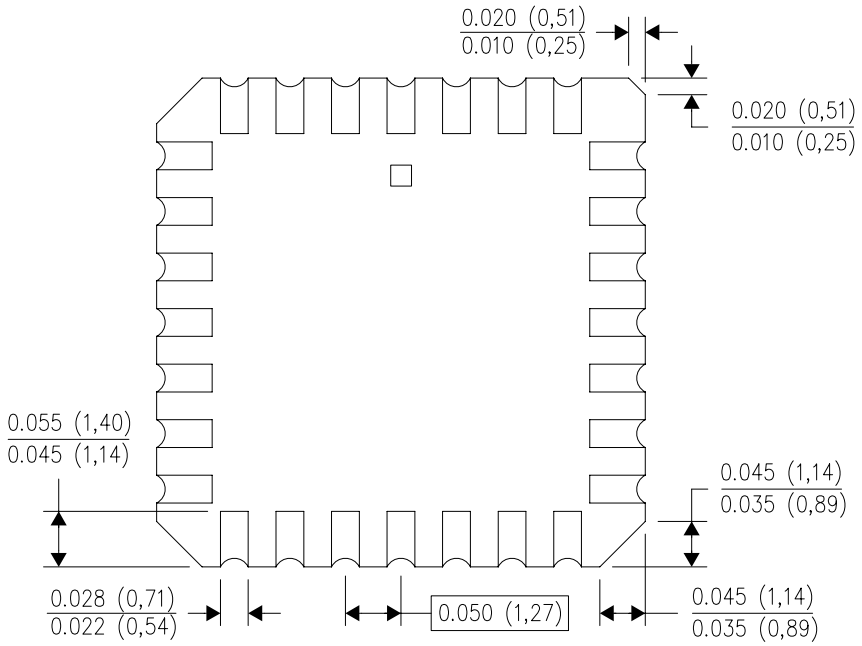

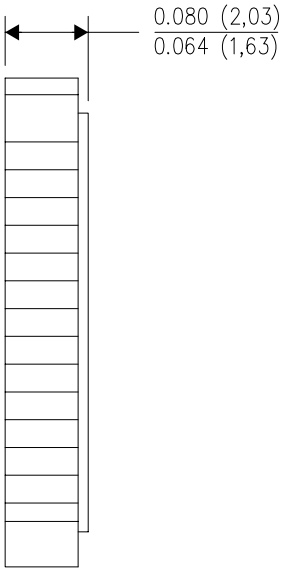

4040140/D 01/11

NOTES:
A. All linear dimensions are in inches (millimeters).
B. This drawing is subject to change without notice.
C. This package can be hermetically sealed with a metal lid.
D. Falls within JEDEC MS–004

N (R–PDIP–T**) PLASTIC DUAL–IN–LINE PACKAGE

16 PINS SHOWN

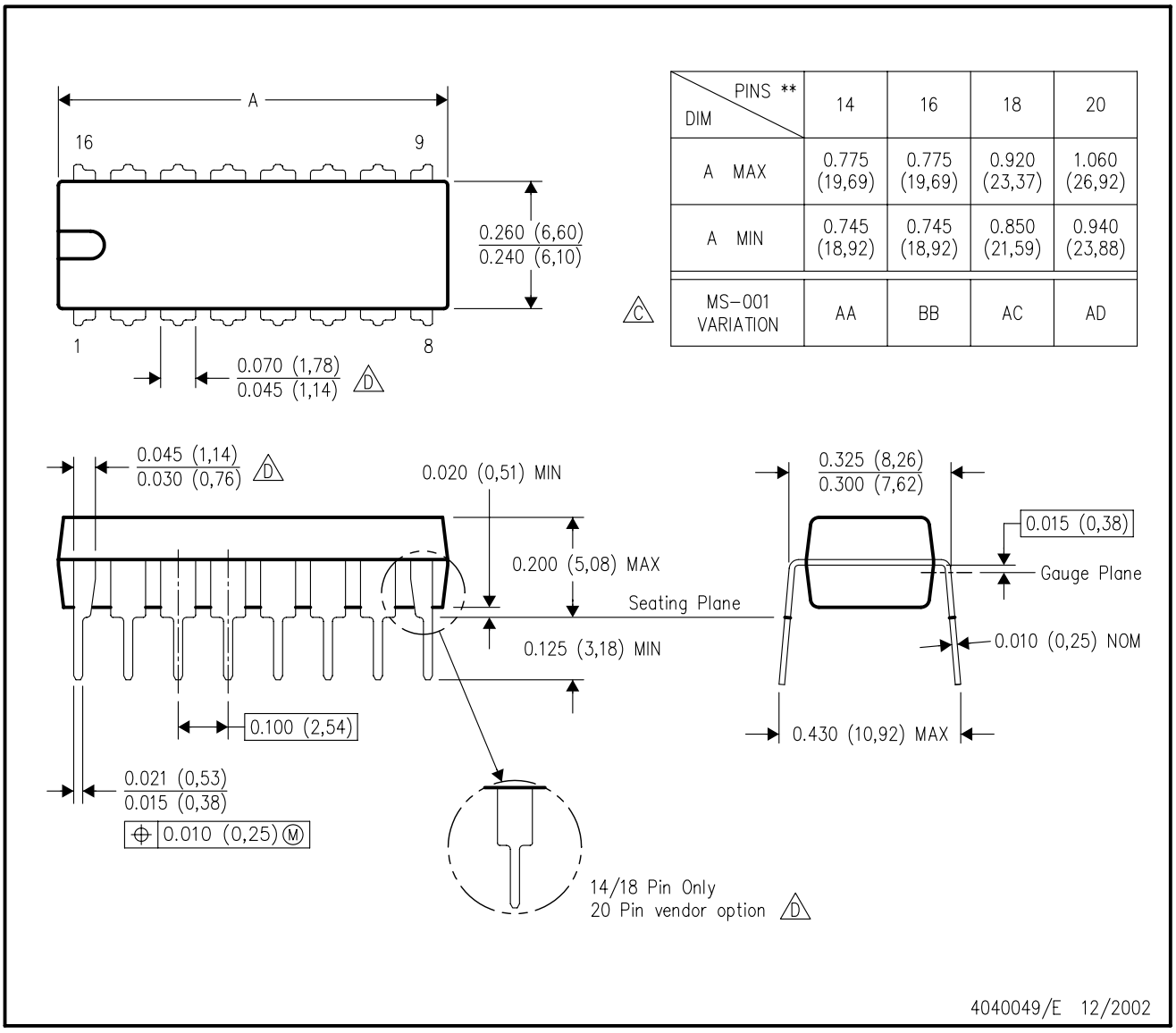

DIM \ PINS **	14	16	18	20
A MAX	0.775 (19,69)	0.775 (19,69)	0.920 (23,37)	1.060 (26,92)
A MIN	0.745 (18,92)	0.745 (18,92)	0.850 (21,59)	0.940 (23,88)
MS–001 VARIATION (C)	AA	BB	AC	AD

NOTES:
A. All linear dimensions are in inches (millimeters).
B. This drawing is subject to change without notice.
C. Falls within JEDEC MS–001, except 18 and 20 pin minimum body length (Dim A).
D. The 20 pin end lead shoulder width is a vendor option, either half or full width.

D (R–PDSO–G14) PLASTIC SMALL OUTLINE

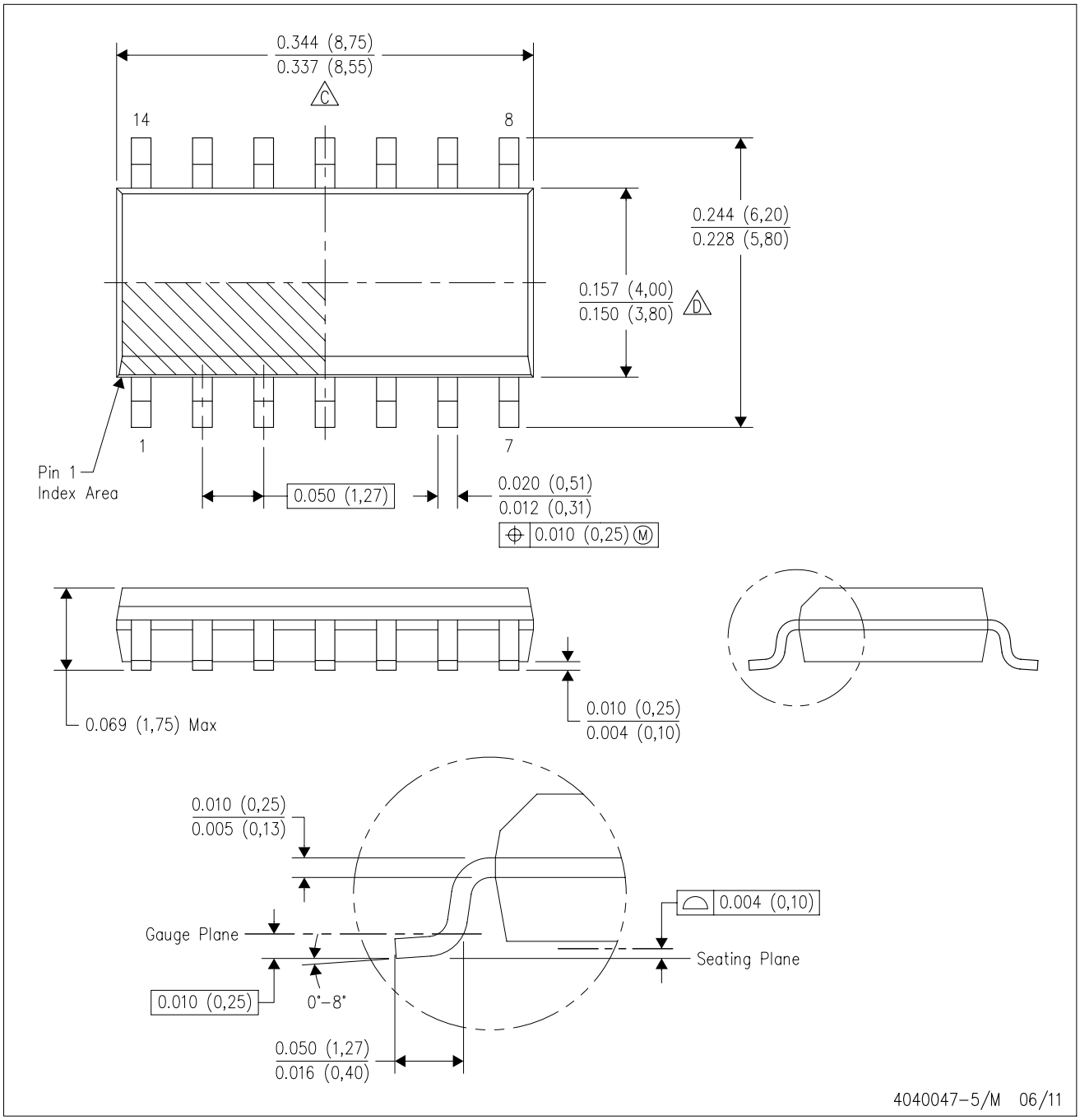

NOTES:
A. All linear dimensions are in inches (millimeters).
B. This drawing is subject to change without notice.
C. Body length does not include mold flash, protrusions, or gate burrs. Mold flash, protrusions, or gate burrs shall not exceed 0.006 (0,15) each side.
D. Body width does not include interlead flash. Interlead flash shall not exceed 0.017 (0,43) each side.
E. Reference JEDEC MS–012 variation AB.

D (R–PDSO–G14) PLASTIC SMALL OUTLINE

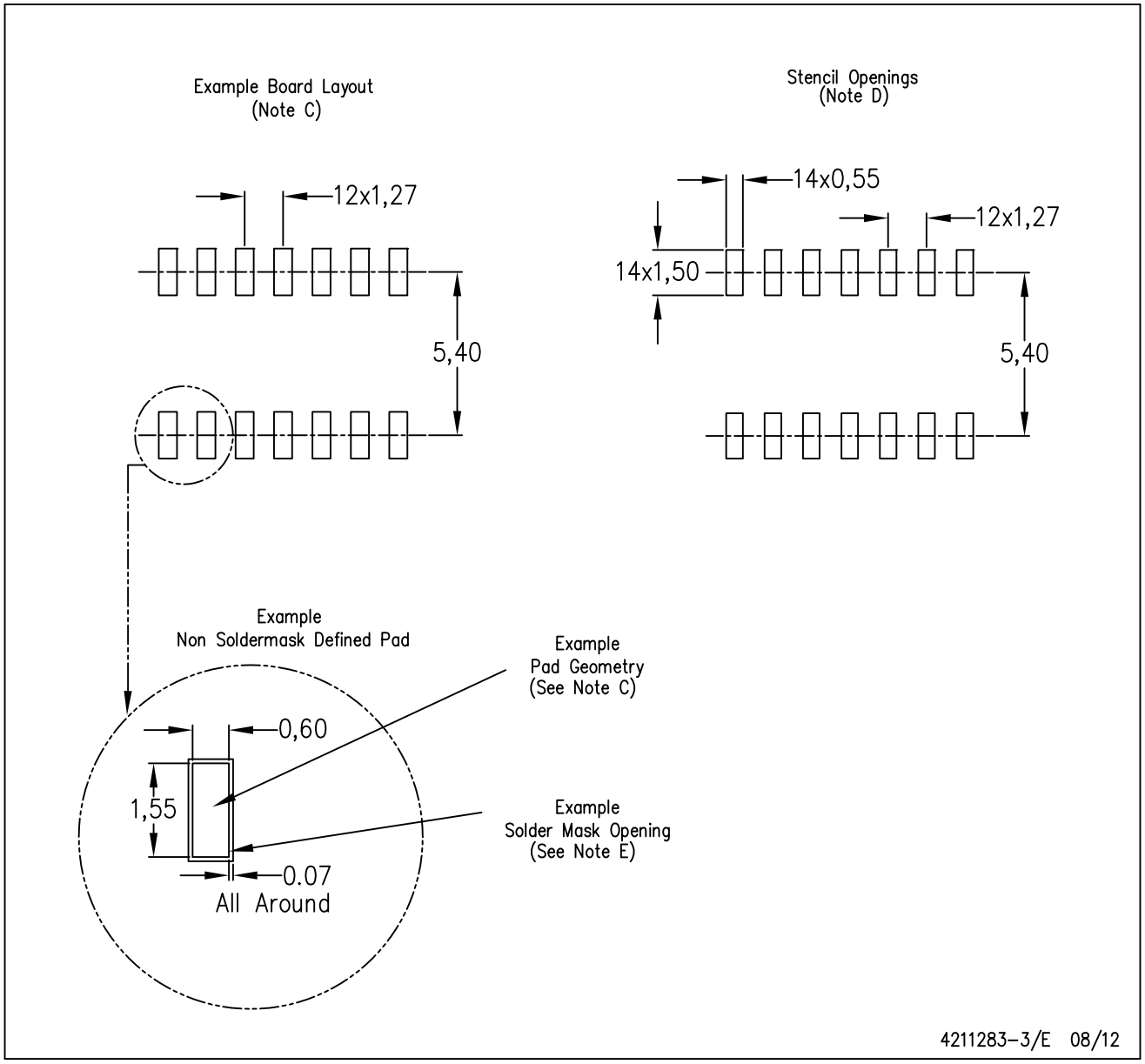

NOTES:
A. All linear dimensions are in millimeters.
B. This drawing is subject to change without notice.
C. Publication IPC–7351 is recommended for alternate designs.
D. Laser cutting apertures with trapezoidal walls and also rounding corners will offer better paste release. Customers should contact their board assembly site for stencil design recommendations. Refer to IPC–7525 for other stencil recommendations.
E. Customers should contact their board fabrication site for solder mask tolerances between and around signal pads.

D (R–PDSO–G16) PLASTIC SMALL OUTLINE

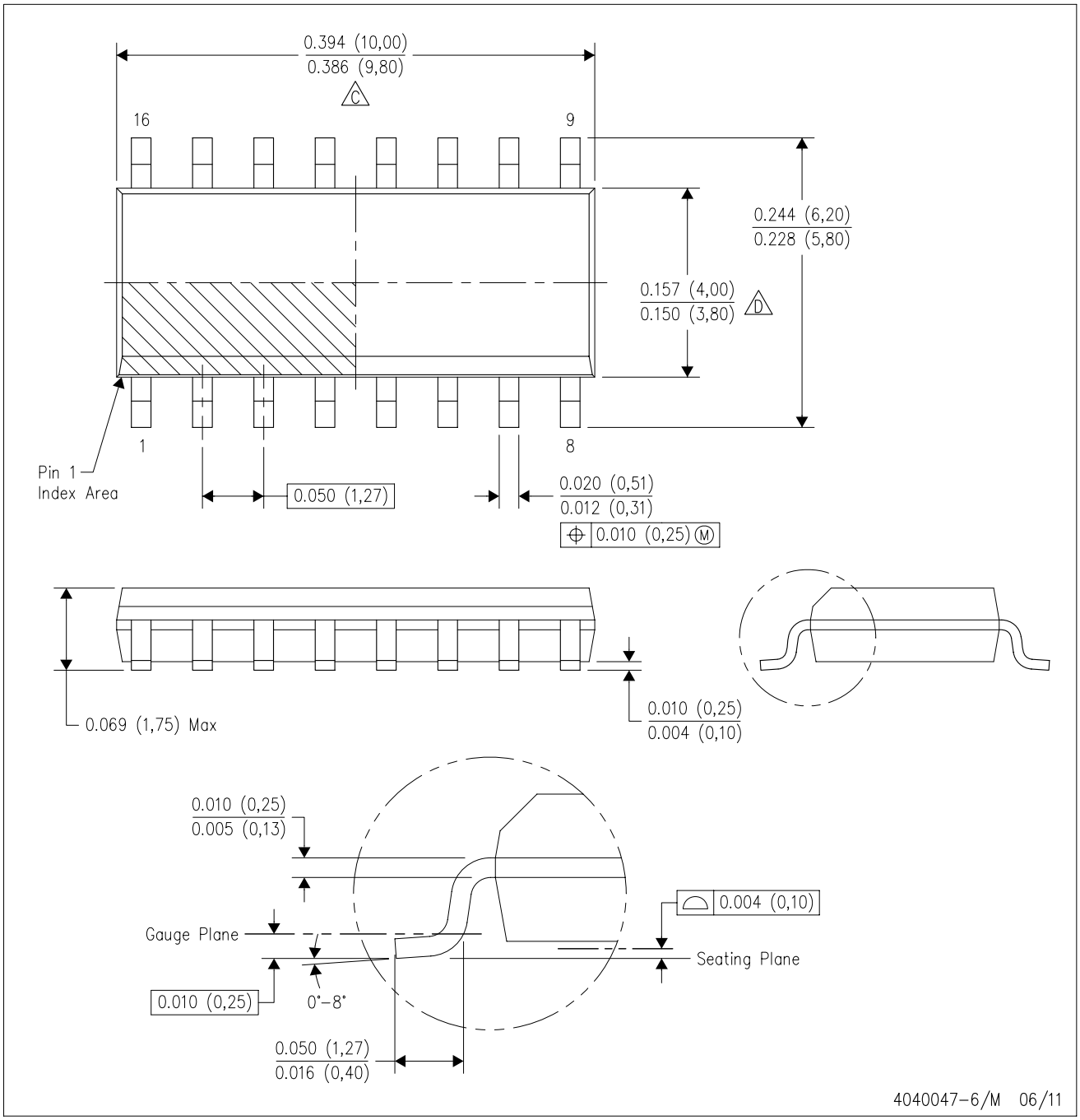

NOTES:
A. All linear dimensions are in inches (millimeters).
B. This drawing is subject to change without notice.
C. Body length does not include mold flash, protrusions, or gate burrs. Mold flash, protrusions, or gate burrs shall not exceed 0.006 (0,15) each side.
D. Body width does not include interlead flash. Interlead flash shall not exceed 0.017 (0,43) each side.
E. Reference JEDEC MS–012 variation AC.

D (R–PDSO–G16) PLASTIC SMALL OUTLINE

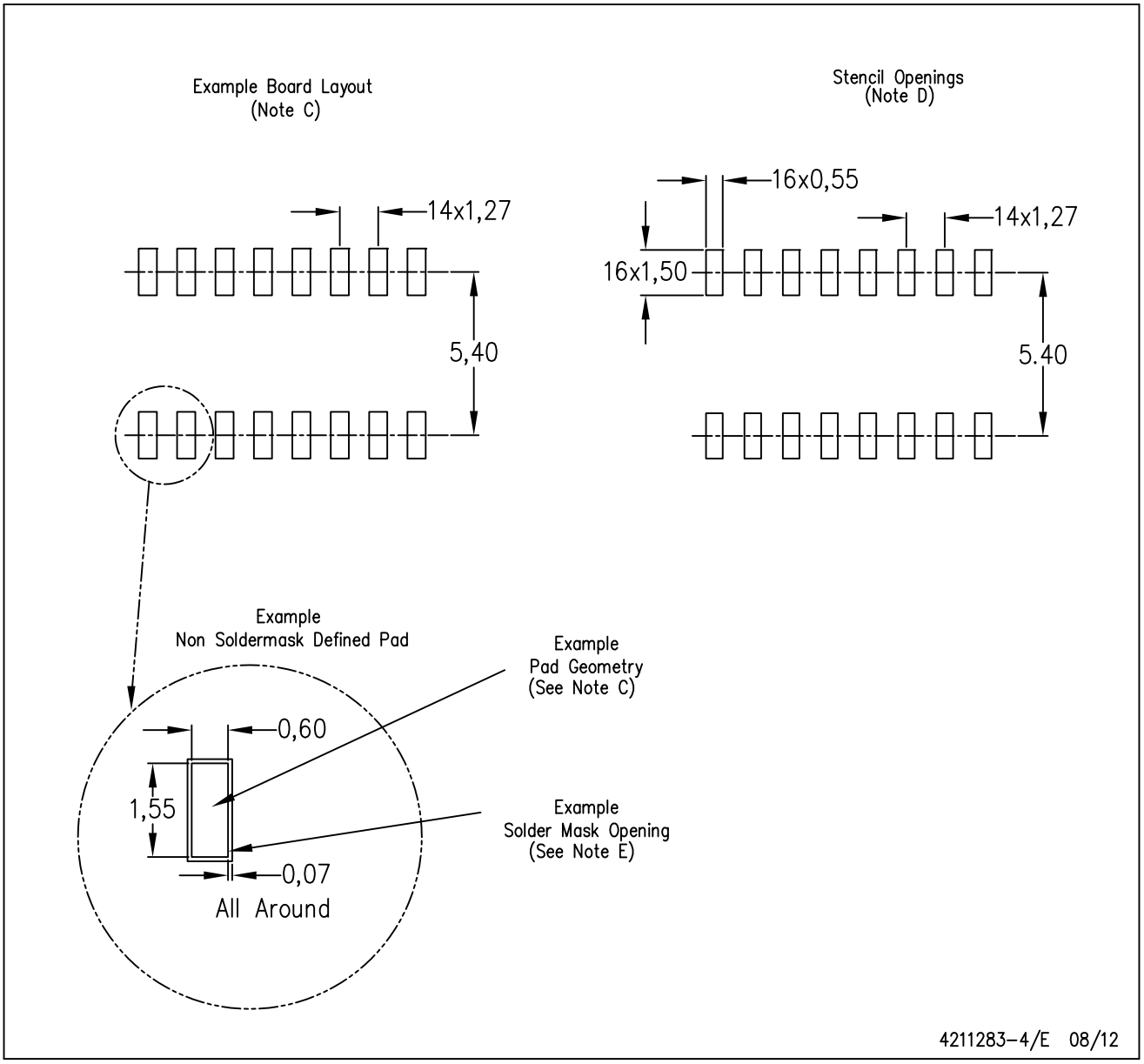

NOTES:
A. All linear dimensions are in millimeters.
B. This drawing is subject to change without notice.
C. Publication IPC–7351 is recommended for alternate designs.
D. Laser cutting apertures with trapezoidal walls and also rounding corners will offer better paste release. Customers should contact their board assembly site for stencil design recommendations. Refer to IPC–7525 for other stencil recommendations.
E. Customers should contact their board fabrication site for solder mask tolerances between and around signal pads.

MECHANICAL DATA

NS (R-PDSO-G)** **PLASTIC SMALL-OUTLINE PACKAGE**

14-PINS SHOWN

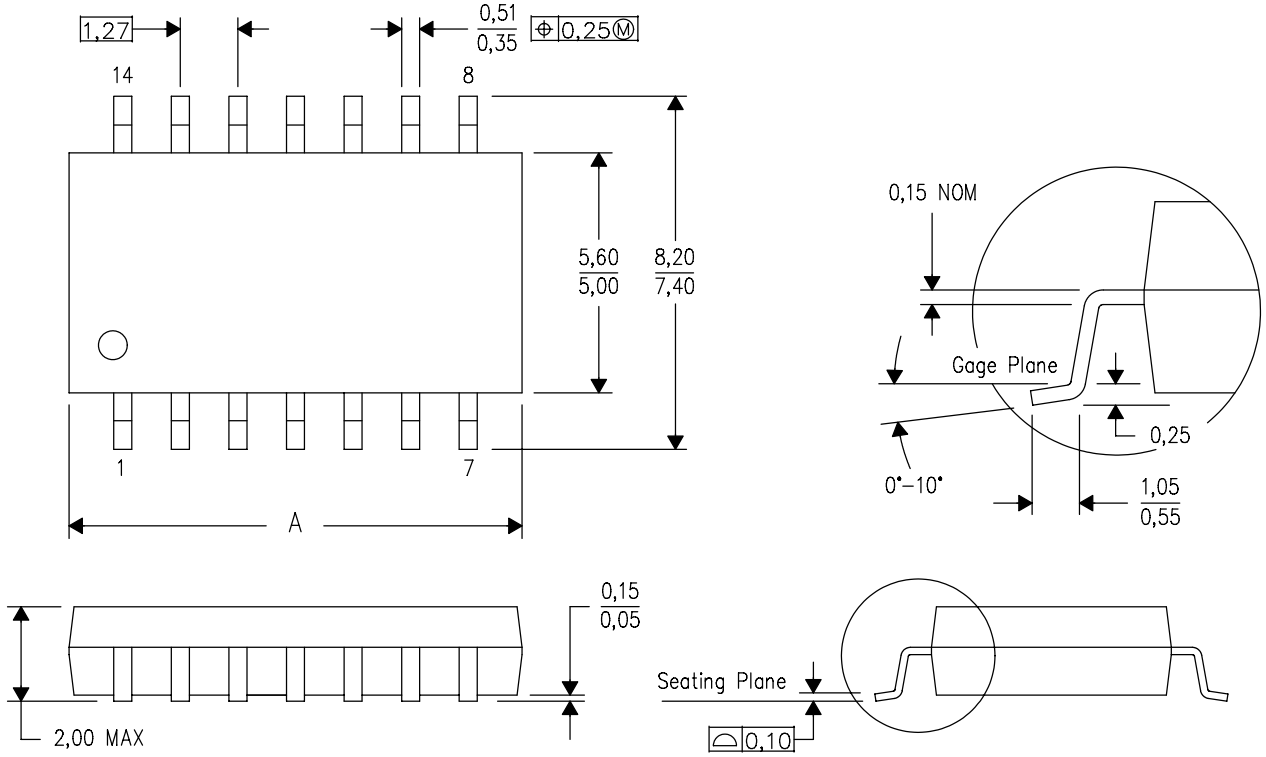

DIM \ PINS **	14	16	20	24
A MAX	10,50	10,50	12,90	15,30
A MIN	9,90	9,90	12,30	14,70

4040062/C 03/03

NOTES:
A. All linear dimensions are in millimeters.
B. This drawing is subject to change without notice.
C. Body dimensions do not include mold flash or protrusion, not to exceed 0,15.

IMPORTANT NOTICE

Texas Instruments Incorporated and its subsidiaries (TI) reserve the right to make corrections, enhancements, improvements and other changes to its semiconductor products and services per JESD46, latest issue, and to discontinue any product or service per JESD48, latest issue. Buyers should obtain the latest relevant information before placing orders and should verify that such information is current and complete. All semiconductor products (also referred to herein as “components”) are sold subject to TI’s terms and conditions of sale supplied at the time of order acknowledgment.

TI warrants performance of its components to the specifications applicable at the time of sale, in accordance with the warranty in TI’s terms and conditions of sale of semiconductor products. Testing and other quality control techniques are used to the extent TI deems necessary to support this warranty. Except where mandated by applicable law, testing of all parameters of each component is not necessarily performed.

TI assumes no liability for applications assistance or the design of Buyers’ products. Buyers are responsible for their products and applications using TI components. To minimize the risks associated with Buyers’ products and applications, Buyers should provide adequate design and operating safeguards.

TI does not warrant or represent that any license, either express or implied, is granted under any patent right, copyright, mask work right, or other intellectual property right relating to any combination, machine, or process in which TI components or services are used. Information published by TI regarding third-party products or services does not constitute a license to use such products or services or a warranty or endorsement thereof. Use of such information may require a license from a third party under the patents or other intellectual property of the third party, or a license from TI under the patents or other intellectual property of TI.

Reproduction of significant portions of TI information in TI data books or data sheets is permissible only if reproduction is without alteration and is accompanied by all associated warranties, conditions, limitations, and notices. TI is not responsible or liable for such altered documentation. Information of third parties may be subject to additional restrictions.

Resale of TI components or services with statements different from or beyond the parameters stated by TI for that component or service voids all express and any implied warranties for the associated TI component or service and is an unfair and deceptive business practice. TI is not responsible or liable for any such statements.

Buyer acknowledges and agrees that it is solely responsible for compliance with all legal, regulatory and safety-related requirements concerning its products, and any use of TI components in its applications, notwithstanding any applications-related information or support that may be provided by TI. Buyer represents and agrees that it has all the necessary expertise to create and implement safeguards which anticipate dangerous consequences of failures, monitor failures and their consequences, lessen the likelihood of failures that might cause harm and take appropriate remedial actions. Buyer will fully indemnify TI and its representatives against any damages arising out of the use of any TI components in safety-critical applications.

In some cases, TI components may be promoted specifically to facilitate safety-related applications. With such components, TI’s goal is to help enable customers to design and create their own end-product solutions that meet applicable functional safety standards and requirements. Nonetheless, such components are subject to these terms.

No TI components are authorized for use in FDA Class III (or similar life-critical medical equipment) unless authorized officers of the parties have executed a special agreement specifically governing such use.

Only those TI components which TI has specifically designated as military grade or “enhanced plastic” are designed and intended for use in military/aerospace applications or environments. Buyer acknowledges and agrees that any military or aerospace use of TI components which have ***not*** been so designated is solely at the Buyer's risk, and that Buyer is solely responsible for compliance with all legal and regulatory requirements in connection with such use.

TI has specifically designated certain components as meeting ISO/TS16949 requirements, mainly for automotive use. In any case of use of non-designated products, TI will not be responsible for any failure to meet ISO/TS16949.

Products		**Applications**	
Audio	www.ti.com/audio	Automotive and Transportation	www.ti.com/automotive
Amplifiers	amplifier.ti.com	Communications and Telecom	www.ti.com/communications
Data Converters	dataconverter.ti.com	Computers and Peripherals	www.ti.com/computers
DLP® Products	www.dlp.com	Consumer Electronics	www.ti.com/consumer-apps
DSP	dsp.ti.com	Energy and Lighting	www.ti.com/energy
Clocks and Timers	www.ti.com/clocks	Industrial	www.ti.com/industrial
Interface	interface.ti.com	Medical	www.ti.com/medical
Logic	logic.ti.com	Security	www.ti.com/security
Power Mgmt	power.ti.com	Space, Avionics and Defense	www.ti.com/space-avionics-defense
Microcontrollers	microcontroller.ti.com	Video and Imaging	www.ti.com/video
RFID	www.ti-rfid.com		
OMAP Applications Processors	www.ti.com/omap	**TI E2E Community**	e2e.ti.com
Wireless Connectivity	www.ti.com/wirelessconnectivity		

Mailing Address: Texas Instruments, Post Office Box 655303, Dallas, Texas 75265
Copyright © 2013, Texas Instruments Incorporated

Общество с ограниченной ответственностью «МосЧип» ИНН 7719860671 / КПП 771901001
Адрес: 105318, г.Москва, ул.Щербаковская д.3, офис 1107

Данный компонент на территории Российской Федерации

Вы можете приобрести в компании MosChip.

Для оперативного оформления запроса Вам необходимо перейти по данной ссылке:

http://moschip.ru/get-element

Вы можете разместить у нас заказ для любого Вашего проекта, будь то серийное производство или разработка единичного прибора.

В нашем ассортименте представлены ведущие мировые производители активных и пассивных электронных компонентов.

Нашей специализацией является поставка электронной компонентной базы двойного назначения, продукции таких производителей как XILINX, Intel (ex.ALTERA), Vicor, Microchip, Texas Instruments, Analog Devices, Mini-Circuits, Amphenol, Glenair.

Сотрудничество с глобальными дистрибьюторами электронных компонентов, предоставляет возможность заказывать и получать с международных складов практически любой перечень компонентов в оптимальные для Вас сроки.

На всех этапах разработки и производства наши партнеры могут получить квалифицированную поддержку опытных инженеров.

Система менеджмента качества компании отвечает требованиям в соответствии с ГОСТ Р ИСО 9001, ГОСТ РВ 0015-002 и ЭС РД 009

Офис по работе с юридическими лицами:

105318, г.Москва, ул.Щербаковская д.3, офис 1107, 1118, ДЦ «Щербаковский»

Телефон: +7 495 668-12-70 (многоканальный)

Факс: +7 495 668-12-70 (доб.304)

E-mail: info@moschip.ru

Skype отдела продаж:
moschip.ru
moschip.ru_4
moschip.ru_6
moschip.ru_9