W25Q128JV-DTR

3V 128M-BIT
SERIAL FLASH MEMORY WITH
DUAL/QUAD SPI & QPI & DTR

For Industrial & Industrial Plus Grade

Publication Release Date: March 02, 2018
-Revision C

Table of Contents

1. GENERAL DESCRIPTIONS 5
2. FEATURES 5
3. PACKAGE TYPES AND PIN CONFIGURATIONS 6
   - *3.1* Pin Configuration SOIC 208-mil 6
   - *3.2* Pad Configuration WSON 6x5-mm / 8x6-mm 6
   - *3.3* Pin Description SOIC 208-mil, WSON 6x5-mm / 8x6-mm 6
   - *3.4* Pin Configuration SOIC 300-mil 7
   - *3.5* Pin Description SOIC 300-mil 7
   - *3.6* Ball Configuration TFBGA 8x6-mm (5x5 or 6x4 Ball Array) 8
   - *3.7* Ball Description TFBGA 8x6-mm 8
4. PIN DESCRIPTIONS 9
   - *4.1* Chip Select (/CS) 9
   - *4.2* Serial Data Input, Output and IOs (DI, DO and IO0, IO1, IO2, IO3) 9
   - *4.3* Write Protect (/WP) 9
   - *4.4* HOLD (/HOLD) 9
   - *4.5* Serial Clock (CLK) 9
   - *4.6* Reset (/RESET) 9
5. BLOCK DIAGRAM 10
6. FUNCTIONAL DESCRIPTIONS 11
   - *6.1* SPI / QPI Operations 11
     - 6.1.1 Standard SPI Instructions 11
     - 6.1.2 Dual SPI Instructions 11
     - 6.1.3 Quad SPI Instructions 12
     - 6.1.4 QPI Instructions 12
     - 6.1.5 SPI / QPI DTR Read Instructions 12
     - 6.1.6 Hold Function 12
     - 6.1.7 Software Reset & Hardware /RESET pin 13
   - *6.2* Write Protection 14
     - 6.2.1 Write Protect Features 14
7. STATUS AND CONFIGURATION REGISTERS 15
   - *7.1* Status Registers 15
     - 7.1.1 Erase/Write In Progress (BUSY) – *Status Only* 15
     - 7.1.2 Write Enable Latch (WEL) – *Status Only* 15
     - 7.1.3 Block Protect Bits (BP2, BP1, BP0) – *Volatile/Non-Volatile Writable* 15

7.1.4 Top/Bottom Block Protect (TB) – *Volatile/Non-Volatile Writable* 16
7.1.5 Sector/Block Protect Bit (SEC) – *Volatile/Non-Volatile Writable* 16
7.1.6 Complement Protect (CMP) – *Volatile/Non-Volatile Writable* 16
7.1.7 Status Status Register Protect Protect (SRP, SRL) 17
7.1.8 Erase/Program Suspend Status (SUS) – *Status Only* 0
7.1.9 Security Register Lock Bits (LB3, LB2, LB1) – *Volatile/Non-Volatile OTP Writable* 0
7.1.10 Quad Enable (QE) – *Volatile/Non-Volatile Writable* 0
7.1.11 Write Protect Selection (WPS) – *Volatile/Non-Volatile Writable* 19
7.1.12 Output Driver Strength (DRV1, DRV0) – *Volatile/Non-Volatile Writable* 19
7.1.13 /HOLD or /RESET Pin Function (HOLD/RST) – *Volatile/Non-Volatile Writable* 19
7.1.14 Reserved Bits – *Non Functional* 20
7.1.15 W25Q128JV Status Register Memory Protection (WPS = 0, CMP = 0) 21
7.1.16 W25Q128JV Status Register Memory Protection (WPS = 0, CMP = 1) 22
7.1.17 W25Q128JV Individual Block Memory Protection (WPS=1) 23

8. INSTRUCTIONS 24

8.1 Device ID and Instruction Set Tables 24
8.1.1 Manufacturer and Device Identification 24
8.1.2 Instruction Set Table 1 (Standard SPI Instructions)(1) 25
8.1.3 Instruction Set Table 2 (Dual/Quad SPI Instructions) 26
8.1.4 Instruction Set Table 3 (QPI Instructions)(11) 27
8.1.5 Instruction Set Table 4 (DTR with SPI Instructions) 28
8.1.6 Instruction Set Table 5 (DTR with QPI Instructions) 28

8.2 Instruction Descriptions 30
8.2.1 Write Enable (06h) 30
8.2.2 Write Enable for Volatile Status Register (50h) 30
8.2.3 Write Disable (04h) 31
8.2.4 Read Status Register-1 (05h), Status Register-2 (35h) & Status Register-3 (15h) 32
8.2.5 Write Status Register-1 (01h), Status Register-2 (31h) & Status Register-3 (11h) 33
8.2.6 Read Data (03h) 35
8.2.7 Fast Read (0Bh) 36
8.2.8 DTR Fast Read (0Dh) 38
8.2.9 Fast Read Dual Output (3Bh) 40
8.2.10 Fast Read Quad Output (6Bh) 41
8.2.11 Fast Read Dual I/O (BBh) 42
8.2.12 DTR Fast Read Dual I/O (BDh) 44
8.2.13 Fast Read Quad I/O (EBh) 46
8.2.14 DTR Fast Read Quad I/O (EDh) 48
8.2.15 Set Burst with Wrap (77h) 52
8.2.16 Page Program (02h) 53
8.2.17 Quad Input Page Program (32h) 55

8.2.18 Sector Erase (20h) 56
8.2.19 32KB Block Erase (52h) 57
8.2.20 64KB Block Erase (D8h) 58
8.2.21 Chip Erase (C7h / 60h) 59
8.2.22 Erase / Program Suspend (75h) 60
8.2.23 Erase / Program Resume (7Ah) 62
8.2.24 Power-down (B9h) 63
8.2.25 Release Power-down / Device ID (ABh) 64
8.2.26 Read Manufacturer / Device ID (90h) 66
8.2.27 Read Manufacturer / Device ID Dual I/O (92h) 67
8.2.28 Read Manufacturer / Device ID Quad I/O (94h) 68
8.2.29 Read Unique ID Number (4Bh) 69
8.2.30 Read JEDEC ID (9Fh) 70
8.2.31 Erase Security Registers (44h) 71
8.2.32 Read SFDP Register (5Ah) 72
8.2.33 Program Security Registers (42h) 73
8.2.34 Read Security Registers (48h) 74
8.2.35 Set Read Parameters (C0h) 75
8.2.36 Burst Read with Wrap (0Ch) 76
8.2.37 DTR Burst Read with Wrap (0Eh) 77
8.2.38 Enter QPI Mode (38h) 78
8.2.39 Exit QPI Mode (FFh) 79
8.2.40 Individual Block/Sector Lock (36h) 80
8.2.41 Individual Block/Sector Unlock (39h) 81
8.2.42 Read Block/Sector Lock (3Dh) 82
8.2.43 Global Block/Sector Lock (7Eh) 83
8.2.44 Global Block/Sector Unlock (98h) 83
8.2.45 Enable Reset (66h) and Reset Device (99h) 84

9. ELECTRICAL CHARACTERISTICS 85
9.1 Absolute Maximum Ratings (1) 85
9.2 Operating Ranges 85
9.3 Power-Up Power-Down Timing and Requirements 86
9.4 DC Electrical Characteristics- 87
9.5 AC Measurement Conditions 88
9.6 AC Electrical Characteristics(6) 89
9.7 Serial Output Timing 91
9.8 Serial Input Timing 91
9.9 /HOLD Timing 91
9.10 /WP Timing 91

10. PACKAGE SPECIFICATIONS 92

10.1 8-Pin SOIC 208-mil (Package Code S) 92
10.2 8-Pad WSON 6x5-mm (Package Code P) 93
10.3 8-Pad WSON 8x6-mm (Package Code E) 94
10.4 16-Pin SOIC 300-mil (Package Code F) 95
10.5 24-Ball TFBGA 8x6-mm (Package Code B, 5x5-1 ball array) 96
10.6 24-Ball TFBGA 8x6-mm (Package Code C, 6x4 ball array) 97
11. ORDERING INFORMATION 98
11.1 Valid Part Numbers and Top Side Marking 99
12. REVISION HISTORY 100

1. GENERAL DESCRIPTIONS

The W25Q128JV (128M-bit) Serial Flash memory provides a storage solution for systems with limited space, pins and power. The 25Q series offers flexibility and performance well beyond ordinary Serial Flash devices. They are ideal for code shadowing to RAM, executing code directly from Dual/Quad SPI (XIP) and storing voice, text and data. The device operates on a single 2.7V to 3.6V power supply with current consumption as low as 1µA for power-down. All devices are offered in space-saving packages.

The W25Q128JV array is organized into 65,536 programmable pages of 256-bytes each. Up to 256 bytes can be programmed at a time. Pages can be erased in groups of 16 (4KB sector erase), groups of 128 (32KB block erase), groups of 256 (64KB block erase) or the entire chip (chip erase). The W25Q128JV has 4,096 erasable sectors and 256 erasable blocks respectively. The small 4KB sectors allow for greater flexibility in applications that require data and parameter storage. (See Figure 2.)

The W25Q128JV support the standard Serial Peripheral Interface (SPI), Dual/Quad I/O SPI Quad Peripheral Interface (QPI) as well as Double Transfer Rate(DTR) : Serial Clock, Chip Select, Serial Data I/O0 (DI), I/O1 (DO), I/O2 (/WP), and I/O3 (/HOLD). SPI clock frequencies of up to 133MHz are supported allowing equivalent clock rates of 266MHz (133MHz x 2) for Dual I/O and 532MHz (133MHz x 4) for Quad I/O when using the Fast Read Dual/Quad I/O and QPI instructions. These 3transfer rates can outperform standard Asynchronous 8 and 16-bit Parallel Flash memories. The Continuous Read Mode allows for efficient memory access with as few as 8-clocks of instruction-overhead to read a 24-bit address, allowing true XIP (execute in place) operation.

A Hold pin, Write Protect pin and programmable write protection, with top or bottom array control, provide further control flexibility. Additionally, the device supports JEDEC standard manufacturer and device ID, a 64-bit Unique Serial Number and three 256-bytes Security Registers.

2. FEATURES

- **New Family of SpiFlash Memories**
  - W25Q128JV: 128M-bit / 16M-byte
  - Standard SPI: CLK, /CS, DI, DO, /WP, /Hold
  - Dual SPI: CLK, /CS, IO_0, IO_1, /WP, /Hold
  - Quad SPI: CLK, /CS, IO_0, IO_1, IO_2, IO_3
  - QPI: CLK, /CS, IO_0, IO_1, IO_2, IO_3
  - SPI/QPI DTR(Double Transfer Rate) Read
  - Software & Hardware Reset(1)
- **Highest Performance Serial Flash**
  - 133MHz Single, Dual/Quad SPI clocks
  - 266/532MHz equivalent Dual/Quad SPI
  - 66MB/S continuous data transfer rate
  - Min. 100K Program-Erase cycles per sector
  - More than 20-year data retention
- **Efficient "Continuous Read" and QPI Mode**
  - Continuous Read with 8/16/32/64-Byte Wrap
  - As few as 8 clocks to address memory
  - Quad Peripheral Interface (QPI) reduces instruction overhead
  - Allows true XIP (execute in place) operation
- **Low Power, Wide Temperature Range**
  - Single 2.7 to 3.6V supply
  - <1µA Power-down (typ.)
  - -40°C to +85°C operating range
  - -40°C to +105°C operating range
- **Flexible Architecture with 4KB sectors**
  - Uniform Sector/Block Erase (4K/32K/64K-Byte)
  - Program 1 to 256 byte per programmable page
  - Erase/Program Suspend & Resume
- **Advanced Security Features**
  - Software and Hardware Write-Protect
  - Power Supply Lock-Down and OTP protection
  - Top/Bottom, Complement array protection
  - Individual Block/Sector array protection
  - 64-Bit Unique ID for each device
  - Discoverable Parameters (SFDP) Register
  - 3X256-Bytes Security Registers with OTP locks
  - Volatile & Non-volatile Status Register Bits
- **Space Efficient Packaging**
  - 8-pin SOIC 208-mil
  - 8-pad WSON 6x5-mm / 8x6-mm
  - 16-pin SOIC 300-mil (additional /RESET pin)
  - 24-ball TFBGA 8x6-mm (6x4/5x5 ball array)
  - Contact Winbond for KGD and other options

Note: 1. Hardware /RESET pin is only available on SOIC16 or TFBGA packages

3. PACKAGE TYPES AND PIN CONFIGURATIONS

3.1 Pin Configuration SOIC 208-mil

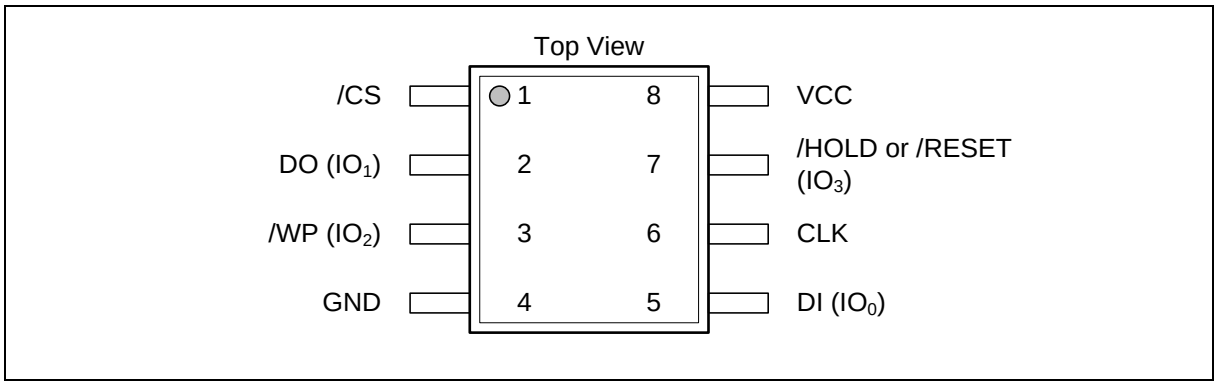

Figure 1a. W25Q128JV Pin Assignments, 8-pin SOIC 208-mil (Package Code S)

3.2 Pad Configuration WSON 6x5-mm / 8x6-mm

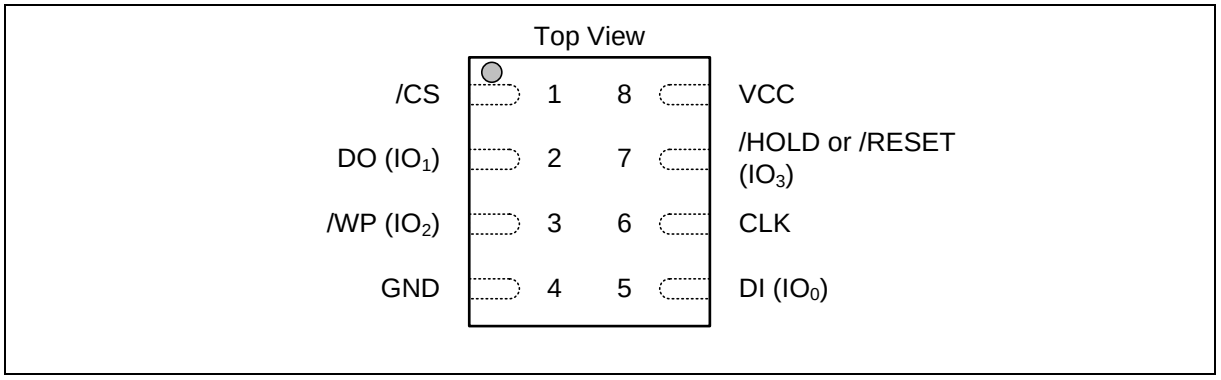

Figure 1b. W25Q128JV Pad Assignments, 8-pad WSON 6x5-mm / 8x6-mm (Package Code P / E)

3.3 Pin Description SOIC 208-mil, WSON 6x5-mm / 8x6-mm

PIN NO.	PIN NAME	I/O	FUNCTION
1	/CS	I	Chip Select Input
2	DO (IO1)	I/O	Data Output (Data Input Output 1)[1]
3	/WP (IO2)	I/O	Write Protect Input (Data Input Output 2)[2]
4	GND		Ground
5	DI (IO0)	I/O	Data Input (Data Input Output 0)[1]
6	CLK	I	Serial Clock Input
7	/HOLD or /RESET (IO3)	I/O	Hold or Reset Input (Data Input Output 3)[2]
8	VCC		Power Supply

Notes: 1. IO0 and IO1 are used for Standard and Dual SPI instructions
2. IO0 – IO3 are used for Quad SPI instructions, /WP & /HOLD (or /RESET) functions are only available for Standard/Dual SPI.

3.4 Pin Configuration SOIC 300-mil

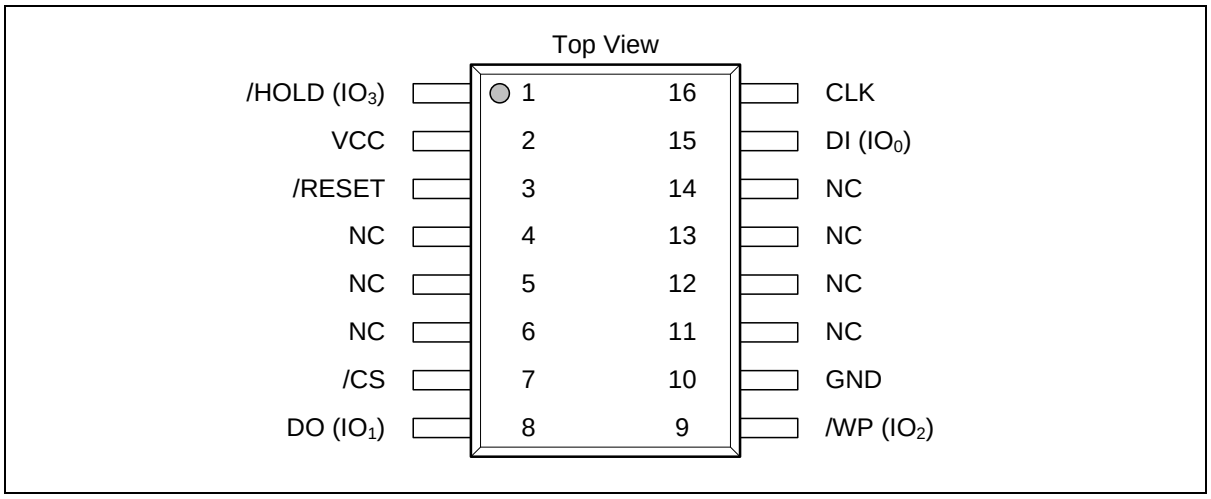

Figure 1c. W25Q128JV Pin Assignments, 16-pin SOIC 300-mil (Package Code F)

3.5 Pin Description SOIC 300-mil

PIN NO.	PIN NAME	I/O	FUNCTION
1	/HOLD (IO3)	I/O	Hold Input (Data Input Output 3)(2)
2	VCC		Power Supply
3	/RESET	I	Reset Input(3)
4	N/C		No Connect
5	N/C		No Connect
6	N/C		No Connect
7	/CS	I	Chip Select Input
8	DO (IO1)	I/O	Data Output (Data Input Output 1)(1)
9	/WP (IO2)	I/O	Write Protect Input (Data Input Output 2)(2)
10	GND		Ground
11	N/C		No Connect
12	N/C		No Connect
13	N/C		No Connect
14	N/C		No Connect
15	DI (IO0)	I/O	Data Input (Data Input Output 0)(1)
16	CLK	I	Serial Clock Input

Notes:

1. IO0 and IO1 are used for Standard and Dual SPI instructions
2. IO0 – IO3 are used for Quad SPI instructions, /WP & /HOLD (or /RESET) functions are only available for Standard/Dual SPI.
3. The /RESET pin on SOIC-16 package is independent of the HOLD/RST bit and QE bit settings in the Status Register. This pin can be left floating, if Rest function is not needed.

3.6 Ball Configuration TFBGA 8x6-mm (5x5 or 6x4 Ball Array)

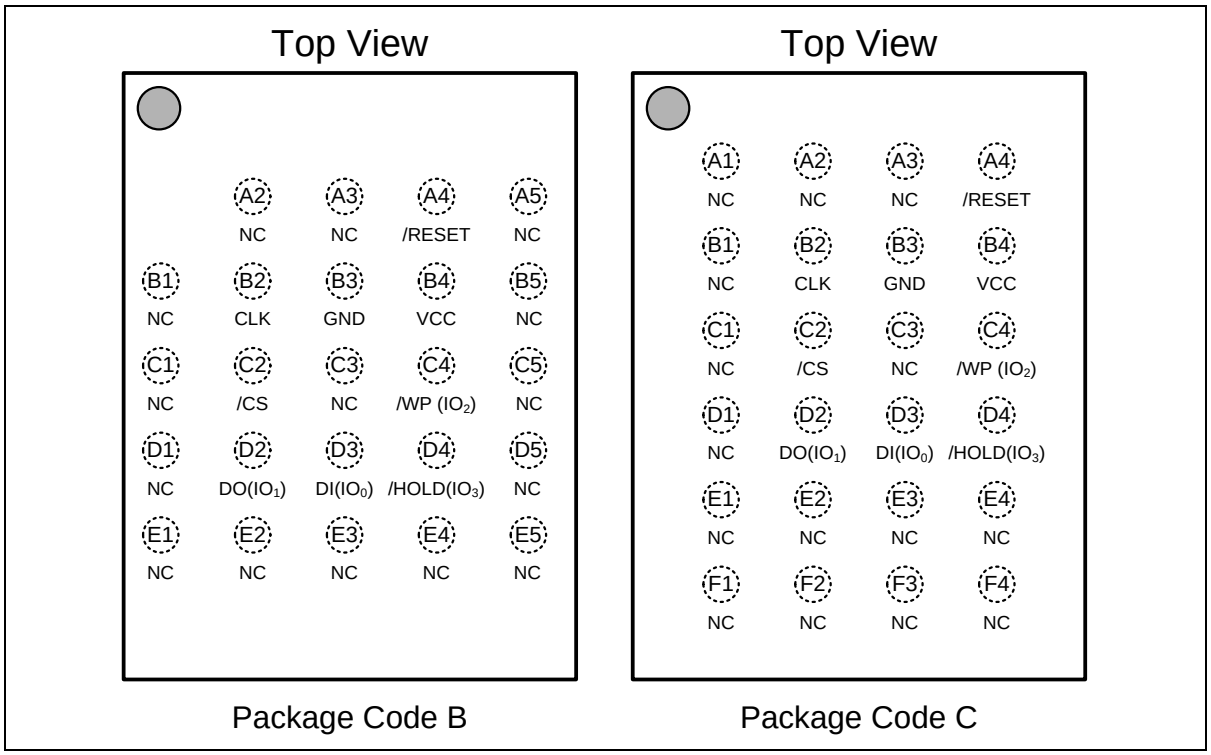

Figure 1d. W25Q128JV Ball Assignments, 24-ball TFBGA 8x6-mm (Package Code B & C)

3.7 Ball Description TFBGA 8x6-mm

BALL NO.	PIN NAME	I/O	FUNCTION
A4	/RESET	I	Reset Input
B2	CLK	I	Serial Clock Input
B3	GND		Ground
B4	VCC		Power Supply
C2	/CS	I	Chip Select Input
C4	/WP (IO2)	I/O	Write Protect Input (Data Input Output 2)(2)
D2	DO (IO1)	I/O	Data Output (Data Input Output 1)(1)
D3	DI (IO0)	I/O	Data Input (Data Input Output 0)(1)
D4	/HOLD (IO3)	I/O	Hold Input (Data Input Output 3)(2)
Multiple	NC		No Connect

Notes:

1. IO0 and IO1 are used for Standard and Dual SPI instructions
2. IO0 – IO3 are used for Quad SPI instructions, /WP & /HOLD (or /RESET) functions are only available for Standard/Dual SPI.

4. PIN DESCRIPTIONS

4.1 Chip Select (/CS)

The SPI Chip Select (/CS) pin enables and disables device operation. When /CS is high the device is deselected and the Serial Data Output (DO, or IO0, IO1, IO2, IO3) pins are at high impedance. When deselected, the devices power consumption will be at standby levels unless an internal erase, program or write status register cycle is in progress. When /CS is brought low the device will be selected, power consumption will increase to active levels and instructions can be written to and data read from the device. After power-up, /CS must transition from high to low before a new instruction will be accepted. The /CS input must track the VCC supply level at power-up and power-down (see “Write Protection” and Figure 58). If needed a pull-up resister on the /CS pin can be used to accomplish this.

4.2 Serial Data Input, Output and IOs (DI, DO and IO0, IO1, IO2, IO3)

The W25Q128JV supports standard SPI, Dual SPI and Quad SPI operation. Standard SPI instructions use the unidirectional DI (input) pin to serially write instructions, addresses or data to the device on the rising edge of the Serial Clock (CLK) input pin. Standard SPI also uses the unidirectional DO (output) to read data or status from the device on the falling edge of CLK.

Dual and Quad SPI instructions use the bidirectional IO pins to serially write instructions, addresses or data to the device on the rising edge of CLK and read data or status from the device on the falling edge of CLK. Quad SPI instructions require the non-volatile Quad Enable bit (QE) in Status Register-2 to be set. When QE=1, the /WP pin becomes IO2 and /HOLD pin becomes IO3.

4.3 Write Protect (/WP)

The Write Protect (/WP) pin can be used to prevent the Status Register from being written. Used in conjunction with the Status Register’s Block Protect (CMP, SEC, TB, BP2, BP1 and BP0) bits and Status Register Protect (SRP) bits, a portion as small as a 4KB sector or the entire memory array can be hardware protected. The /WP pin is active low. When the QE bit of Status Register-2 is set for Quad I/O, the /WP pin function is not available since this pin is used for IO2. See Figure 1a-c for the pin configuration of Quad I/O operation.

4.4 HOLD (/HOLD)

The /HOLD pin allows the device to be paused while it is actively selected. When /HOLD is brought low, while /CS is low, the DO pin will be at high impedance and signals on the DI and CLK pins will be ignored (don’t care). When /HOLD is brought high, device operation can resume. The /HOLD function can be useful when multiple devices are sharing the same SPI signals. The /HOLD pin is active low. When the QE bit of Status Register-2 is set for Quad I/O, the /HOLD pin function is not available since this pin is used for IO3. See Figure 1a-e for the pin configuration of Quad I/O operation.

4.5 Serial Clock (CLK)

The SPI Serial Clock Input (CLK) pin provides the timing for serial input and output operations. ("See SPI Operations")

4.6 Reset (/RESET)

The /RESET pin allows the device to be reset by the controller. For 8-pin packages, when QE=0, the IO3 pin can be configured either as a /HOLD pin or as a /RESET pin depending on Status Register setting. When QE=1, the /HOLD or /RESET function is not available for 8-pin configuration. On the 16-pin SOIC and TFBGA package, a dedicated /RESET pin is provided and it is independent of QE bit setting.

5. BLOCK DIAGRAM

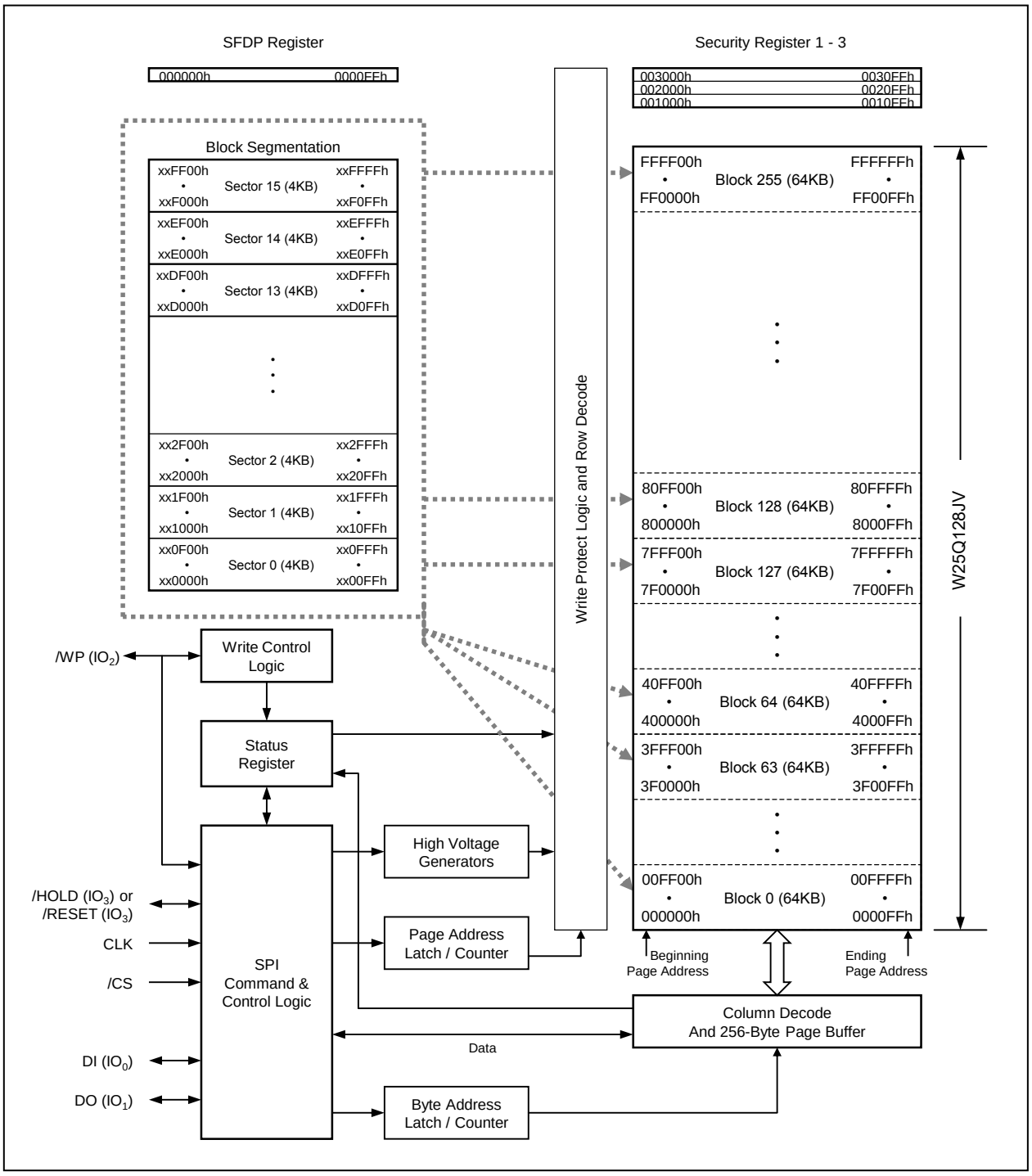

Figure 2. W25Q128JV Serial Flash Memory Block Diagram

6. FUNCTIONAL DESCRIPTIONS

6.1 SPI / QPI Operations

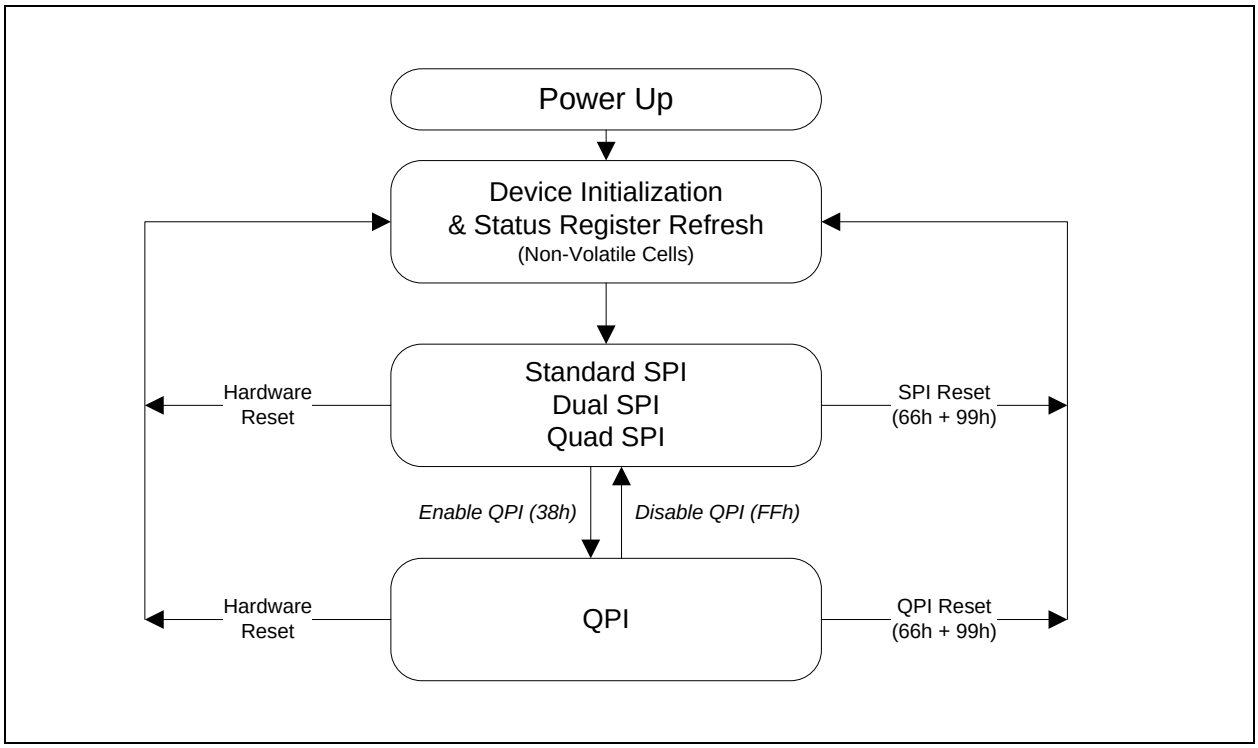

Figure 3. W25Q128JV Serial Flash Memory Operation Diagram

6.1.1 Standard SPI Instructions

The W25Q128JV is accessed through an SPI compatible bus consisting of four signals: Serial Clock (CLK), Chip Select (/CS), Serial Data Input (DI) and Serial Data Output (DO). Standard SPI instructions use the DI input pin to serially write instructions, addresses or data to the device on the rising edge of CLK. The DO output pin is used to read data or status from the device on the falling edge of CLK.

SPI bus operation Mode 0 (0,0) and 3 (1,1) are supported. The primary difference between Mode 0 and Mode 3 concerns the normal state of the CLK signal when the SPI bus master is in standby and data is not being transferred to the Serial Flash. For Mode 0, the CLK signal is normally low on the falling and rising edges of /CS. For Mode 3, the CLK signal is normally high on the falling and rising edges of /CS.

6.1.2 Dual SPI Instructions

The W25Q128JV supports Dual SPI operation when using instructions such as “Fast Read Dual Output (3Bh)” and “Fast Read Dual I/O (BBh)”. These instructions allow data to be transferred to or from the device at two to three times the rate of ordinary Serial Flash devices. The Dual SPI Read instructions are ideal for quickly downloading code to RAM upon power-up (code-shadowing) or for executing non-speed-critical code directly from the SPI bus (XIP). When using Dual SPI instructions, the DI and DO pins become bidirectional I/O pins: IO0 and IO1.

6.1.3 Quad SPI Instructions

The W25Q128JV supports Quad SPI operation when using instructions such as “Fast Read Quad Output (6Bh)”, and “Fast Read Quad I/O (EBh)”. These instructions allow data to be transferred to or from the device four to six times the rate of ordinary Serial Flash. The Quad Read instructions offer a significant improvement in continuous and random access transfer rates allowing fast code-shadowing to RAM or execution directly from the SPI bus (XIP). When using Quad SPI instructions the DI and DO pins become bidirectional IO0 and IO1, and the /WP and /HOLD pins become IO2 and IO3 respectively. Quad SPI instructions require the non-volatile Quad Enable bit (QE) in Status Register-2 to be set.

6.1.4 QPI Instructions

The W25Q128JV supports Quad Peripheral Interface (QPI) operations only when the device is switched from Standard/Dual/Quad SPI mode to QPI mode using the “Enter QPI (38h)” instruction. The typical SPI protocol requires that the byte-long instruction code being shifted into the device only via DI pin in eight serial clocks. The QPI mode utilizes all four IO pins to input the instruction code, thus only two serial clocks are required. This can significantly reduce the SPI instruction overhead and improve system performance in an XIP environment. Standard/Dual/Quad SPI mode and QPI mode are exclusive. Only one mode can be active at any given time. “Enter QPI (38h)” and “Exit QPI (FFh)” instructions are used to switch between these two modes. Upon power-up or after a software reset using “Reset (99h)” instruction, the default state of the device is Standard/Dual/Quad SPI mode. To enable QPI mode, the non-volatile Quad Enable bit (QE) in Status Register-2 is required to be set. When using QPI instructions, the DI and DO pins become bidirectional IO0 and IO1, and the /WP and /HOLD pins become IO2 and IO3 respectively. See Figure 3 for the device operation modes.

6.1.5 SPI / QPI DTR Read Instructions

To effectively improve the read operation throughput without increasing the serial clock frequency, W25Q128JV introduces multiple DTR (Double Transfer Rate) Read instructions that support Standard/Dual/Quad SPI and QPI modes. The byte-long instruction code is still latched into the device on the rising edge of the serial clock similar to all other SPI/QPI instructions. Once a DTR instruction code is accepted by the device, the address input and data output will be latched on both rising and falling edges of the serial clock.

6.1.6 Hold Function

For Standard SPI and Dual SPI operations, the /HOLD signal allows the W25Q128JV operation to be paused while it is actively selected (when /CS is low). The /HOLD function may be useful in cases where the SPI data and clock signals are shared with other devices. For example, consider if the page buffer was only partially written when a priority interrupt requires use of the SPI bus. In this case the /HOLD function can save the state of the instruction and the data in the buffer so programming can resume where it left off once the bus is available again. The /HOLD function is only available for standard SPI and Dual SPI operation, not during Quad SPI or QPI. The Quad Enable Bit QE in Status Register-2 is used to determine if the pin is used as /HOLD pin or data I/O pin. When QE=0 (factory default), the pin is /HOLD, when QE=1, the pin will become an I/O pin, /HOLD function is no longer available.

To initiate a /HOLD condition, the device must be selected with /CS low. A /HOLD condition will activate on the falling edge of the /HOLD signal if the CLK signal is already low. If the CLK is not already low the /HOLD condition will activate after the next falling edge of CLK. The /HOLD condition will terminate on the rising edge of the /HOLD signal if the CLK signal is already low. If the CLK is not already low the /HOLD condition will terminate after the next falling edge of CLK. During a /HOLD condition, the Serial Data Output (DO) is high impedance, and Serial Data Input (DI) and Serial Clock (CLK) are ignored. The Chip

Select (/CS) signal should be kept active (low) for the full duration of the /HOLD operation to avoid resetting the internal logic state of the device.

6.1.7 Software Reset & Hardware /RESET pin

The W25Q128JV can be reset to the initial power-on state by a software Reset sequence, either in SPI mode or QPI mode. This sequence must include two consecutive commands: Enable Reset (66h) & Reset (99h). If the command sequence is successfully accepted, the device will take approximately 30uS (t_{RST}) to reset. No command will be accepted during the reset period.

For the WSON-8 and TFBGA package types, W25Q128JV can also be configured to utilize a hardware /RESET pin. The HOLD/RST bit in the Status Register-3 is the configuration bit for /HOLD pin function or RESET pin function. When HOLD/RST=0 (factory default), the pin acts as a /HOLD pin as described above; when HOLD/RST=1, the pin acts as a /RESET pin. Drive the /RESET pin low for a minimum period of ~1us (tRESET*) will reset the device to its initial power-on state. Any on-going Program/Erase operation will be interrupted and data corruption may happen. While /RESET is low, the device will not accept any command input.

If QE bit is set to 1, the /HOLD or /RESET function will be disabled, the pin will become one of the four data I/O pins.

For the SOIC-16 package, W25Q128JV provides a dedicated /RESET pin in addition to the /HOLD (IO_3) pin as illustrated in Figure 1b. Drive the /RESET pin low for a minimum period of ~1us (tRESET*) will reset the device to its initial power-on state. The HOLD/RST bit or QE bit in the Status Register will not affect the function of this dedicated /RESET pin.

Hardware /RESET pin has the highest priority among all the input signals. Drive /RESET low for a minimum period of ~1us (tRESET*) will interrupt any on-going external/internal operations, regardless the status of other SPI signals (/CS, CLK, IOs, /WP and/or /HOLD).

Note:

1. While a faster /RESET pulse (as short as a few hundred nanoseconds) will often reset the device, a 1us minimum is recommended to ensure reliable operation.
2. There is an internal pull-up resistor for the dedicated /RESET pin on the SOIC-16 package. If the reset function is not needed, this pin can be left floating in the system.

6.2 Write Protection

Applications that use non-volatile memory must take into consideration the possibility of noise and other adverse system conditions that may compromise data integrity. To address this concern, the W25Q128JV provides several means to protect the data from inadvertent writes.

6.2.1 Write Protect Features

- Device resets when VCC is below threshold
- Time delay write disable after Power-up
- Write enable/disable instructions and automatic write disable after erase or program
- Software and Hardware (/WP pin) write protection using Status Registers
- Additional Individual Block/Sector Locks for array protection
- Write Protection using Power-down instruction
- Lock Down write protection for Status Register until the next power-up
- One Time Program (OTP) write protection for array and Security Registers using Status Register*

  * Note: This feature is available upon special flow. Please contact Winbond for details.

Upon power-up or at power-down, the W25Q128JV will maintain a reset condition while VCC is below the threshold value of V_{WI}, (See Power-up Timing and Voltage Levels and Figure 43). While reset, all operations are disabled and no instructions are recognized. During power-up and after the VCC voltage exceeds V_{WI}, all program and erase related instructions are further disabled for a time delay of t_{PUW}. This includes the Write Enable, Page Program, Sector Erase, Block Erase, Chip Erase and the Write Status Register instructions. Note that the chip select pin (/CS) must track the VCC supply level at power-up until the VCC-min level and t_{VSL} time delay is reached, and it must also track the VCC supply level at power-down to prevent adverse command sequence. If needed a pull-up resister on /CS can be used to accomplish this.

After power-up the device is automatically placed in a write-disabled state with the Status Register Write Enable Latch (WEL) set to a 0. A Write Enable instruction must be issued before a Page Program, Sector Erase, Block Erase, Chip Erase or Write Status Register instruction will be accepted. After completing a program, erase or write instruction the Write Enable Latch (WEL) is automatically cleared to a write-disabled state of 0.

Software controlled write protection is facilitated using the Write Status Register instruction and setting the Status Register Protect (SRP, SRL) and Block Protect (CMP, SEC, TB, BP[2:0]) bits. These settings allow a portion or the entire memory array to be configured as read only. Used in conjunction with the Write Protect (/WP) pin, changes to the Status Register can be enabled or disabled under hardware control. See Status Register section for further information. Additionally, the Power-down instruction offers an extra level of write protection as all instructions are ignored except for the Release Power-down instruction.

The W25Q128JV also provides another Write Protect method using the Individual Block Locks. Each 64KB block (except the top and bottom blocks, total of 254 blocks) and each 4KB sector within the top/bottom blocks (total of 32 sectors) are equipped with an Individual Block Lock bit. When the lock bit is 0, the corresponding sector or block can be erased or programmed; when the lock bit is set to 1, Erase or Program commands issued to the corresponding sector or block will be ignored. When the device is powered on, all Individual Block Lock bits will be 1, so the entire memory array is protected from Erase/Program. An “Individual Block Unlock (39h)” instruction must be issued to unlock any specific sector or block.

The WPS bit in Status Register-3 is used to decide which Write Protect scheme should be used. When WPS=0 (factory default), the device will only utilize CMP, SEC, TB, BP[2:0] bits to protect specific areas of the array; when WPS=1, the device will utilize the Individual Block Locks for write protection.

7. STATUS AND CONFIGURATION REGISTERS

Three Status and Configuration Registers are provided for W25Q128JV. The Read Status Register-1/2/3 instructions can be used to provide status on the availability of the flash memory array, whether the device is write enabled or disabled, the state of write protection, Quad SPI setting, Security Register lock status, Erase/Program Suspend status, output driver strength, and power-up. The Write Status Register instruction can be used to configure the device write protection features, Quad SPI setting, Security Register OTP locks, Hold/Reset functions, and output driver strength. Write access to the Status Register is controlled by the state of the non-volatile Status Register Protect bits (SRP, SRL), the Write Enable instruction, and during Standard/Dual SPI operations, the /WP pin.

7.1 Status Registers

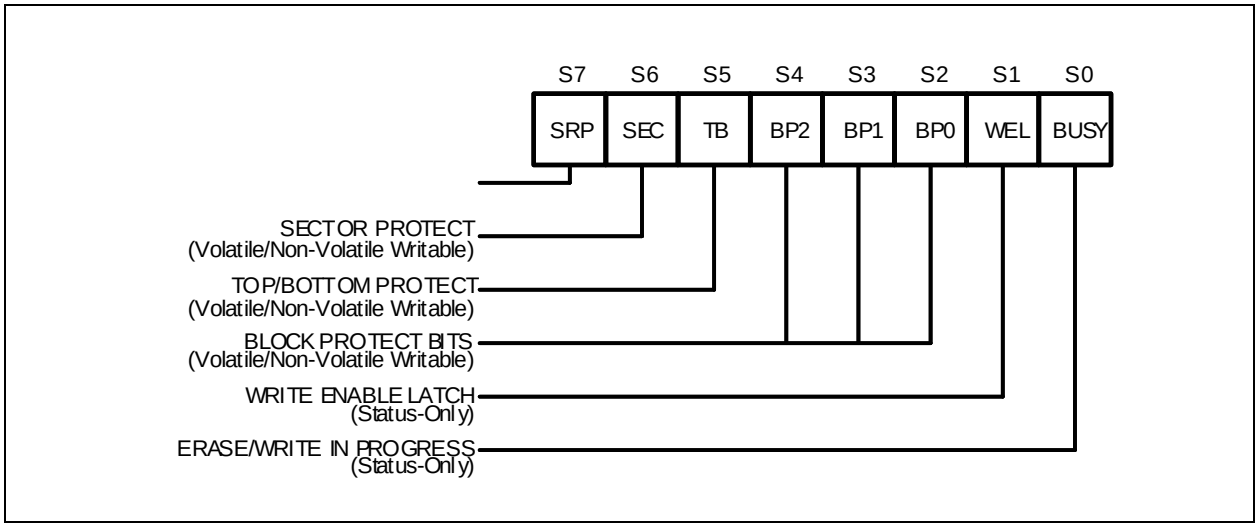

Figure 4a. Status Register-1

7.1.1 Erase/Write In Progress (BUSY) – *Status Only*

BUSY is a read only bit in the status register (S0) that is set to a 1 state when the device is executing a Page Program, Quad Page Program, Sector Erase, Block Erase, Chip Erase, Write Status Register or Erase/Program Security Register instruction. During this time the device will ignore further instructions except for the Read Status Register and Erase/Program Suspend instruction (see t_W, t_{PP}, t_{SE}, t_{BE}, and t_{CE} in AC Characteristics). When the program, erase or write status/security register instruction has completed, the BUSY bit will be cleared to a 0 state indicating the device is ready for further instructions.

7.1.2 Write Enable Latch (WEL) – *Status Only*

Write Enable Latch (WEL) is a read only bit in the status register (S1) that is set to 1 after executing a Write Enable Instruction. The WEL status bit is cleared to 0 when the device is write disabled. A write disable state occurs upon power-up or after any of the following instructions: Write Disable, Page Program, Quad Page Program, Sector Erase, Block Erase, Chip Erase, Write Status Register, Erase Security Register and Program Security Register.

7.1.3 Block Protect Bits (BP2, BP1, BP0) – *Volatile/Non-Volatile Writable*

The Block Protect Bits (BP2, BP1, BP0) are non-volatile read/write bits in the status register (S4, S3, and S2) that provide Write Protection control and status. Block Protect bits can be set using the Write Status Register Instruction (see t_W in AC characteristics). All, none or a portion of the memory array can be protected from Program and Erase instructions (see Status Register Memory Protection table). The factory default setting for the Block Protection Bits is 0, none of the array protected.

7.1.4 Top/Bottom Block Protect (TB) – *Volatile/Non-Volatile Writable*

The non-volatile Top/Bottom bit (TB) controls if the Block Protect Bits (BP2, BP1, BP0) protect from the Top (TB=0) or the Bottom (TB=1) of the array as shown in the Status Register Memory Protection table. The factory default setting is TB=0. The TB bit can be set with the Write Status Register Instruction depending on the state of the SRP, SRL and WEL bits.

7.1.5 Sector/Block Protect Bit (SEC) – *Volatile/Non-Volatile Writable*

The non-volatile Sector/Block Protect bit (SEC) controls if the Block Protect Bits (BP2, BP1, BP0) protect either 4KB Sectors (SEC=1) or 64KB Blocks (SEC=0) in the Top (TB=0) or the Bottom (TB=1) of the array as shown in the Status Register Memory Protection table. The default setting is SEC=0.

7.1.6 Complement Protect (CMP) – *Volatile/Non-Volatile Writable*

The Complement Protect bit (CMP) is a non-volatile read/write bit in the status register (S14). It is used in conjunction with SEC, TB, BP2, BP1 and BP0 bits to provide more flexibility for the array protection. Once CMP is set to 1, previous array protection set by SEC, TB, BP2, BP1 and BP0 will be reversed. For instance, when CMP=0, a top 64KB block can be protected while the rest of the array is not; when CMP=1, the top 64KB block will become unprotected while the rest of the array become read-only. Please refer to the Status Register Memory Protection table for details. The default setting is CMP=0.

7.1.7 Status Status Register Protect Protect (SRP, SRL)

The Status Register Protect bits (SRP) are non-volatile read/write bits in the status register (S7). The SRP bit controls the method of write protection: software protection or hardware protection. The Status Register Lock bits (SRL) are non-volatile/volatile read/write bits in the status register (S8). The SRL bit controls the method of write protection: temporary lock-down or permanently one time program.

SRL	SRP	/WP	Status Register	Description
0	0	X	Software Protection	/WP pin has no control. The Status register can be written to after a Write Enable instruction, WEL=1. [Factory Default]
0	1	0	Hardware Protected	When /WP pin is low the Status Register locked and cannot be written to.
0	1	1	Hardware Unprotected	When /WP pin is high the Status register is unlocked and can be written to after a Write Enable instruction, WEL=1.
1	X	X	Power Supply Lock-Down	Status Register is protected and cannot be written to again until the next power-down, power-up cycle.(1)
1	X	X	One Time Program(2)	Status Register is permanently protected and cannot be written to. (**enabled by adding prefix command AAh, 55h)**

Note:

1. When SRL =1, a power-down, power-up cycle will change SRL =0 state.
2. Please contact Winbond for details regarding the special instruction sequence

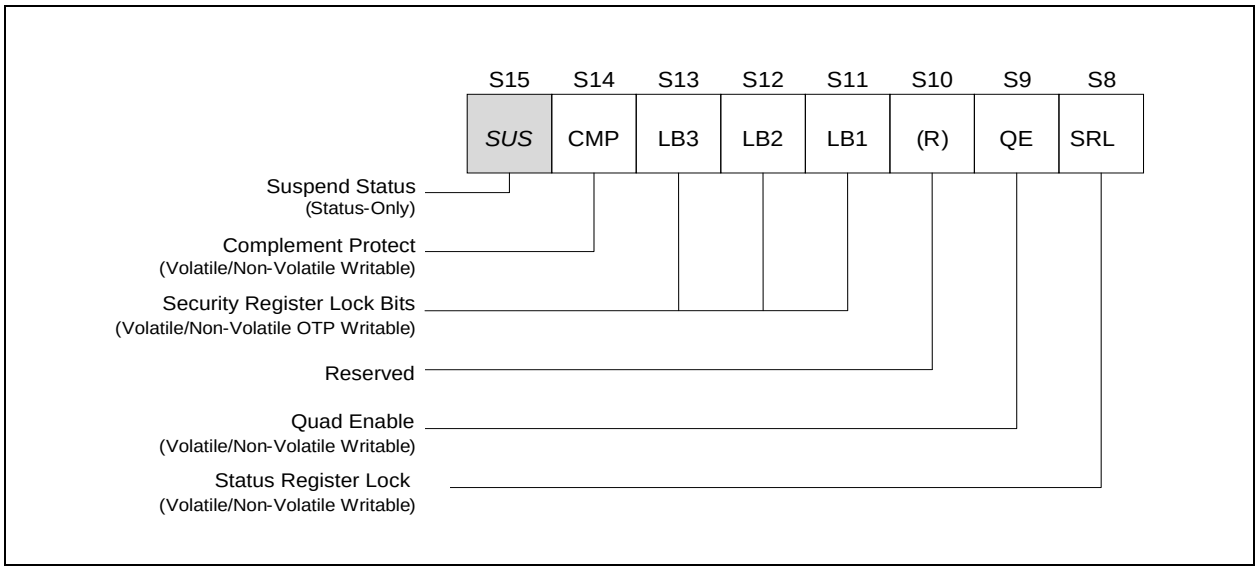

Figure 4b. Status Register-2

7.1.8 Erase/Program Suspend Status (SUS) – *Status Only*

The Suspend Status bit is a read only bit in the status register (S15) that is set to 1 after executing a Erase/Program Suspend (75h) instruction. The SUS status bit is cleared to 0 by Erase/Program Resume (7Ah) instruction as well as a power-down, power-up cycle.

7.1.9 Security Register Lock Bits (LB3, LB2, LB1) – *Volatile/Non-Volatile OTP Writable*

The Security Register Lock Bits (LB3, LB2, LB1) are non-volatile One Time Program (OTP) bits in Status Register (S13, S12, S11) that provide the write protect control and status to the Security Registers. The default state of LB3-1 is 0, Security Registers are unlocked. LB3-1 can be set to 1 individually using the Write Status Register instruction. LB3-1 are One Time Programmable (OTP), once it's set to 1, the corresponding 256-Byte Security Register will become read-only permanently.

7.1.10 Quad Enable (QE) – *Volatile/Non-Volatile Writable*

The Quad Enable (QE) bit is a non-volatile read/write bit in the status register (S9) that allows Quad SPI and QPI operation. When the QE bit is set to a 0 state (factory default for part numbers with ordering options "IM" & "JM"), the /WP pin and /HOLD are enabled. When the QE bit is set to a 1(factory default for Quad Enabled part numbers with ordering option "IQ" & "JQ"), the Quad IO2 and IO3 pins are enabled, and /WP and /HOLD functions are disabled.

QE bit is required to be set to a 1 before issuing an "Enter QPI (38h)" to switch the device from Standard/Dual/Quad SPI to QPI, otherwise the command will be ignored. When the device is in QPI mode, QE bit will remain to be 1. A "Write Status Register" command in QPI mode cannot change QE bit from a "1" to a "0".

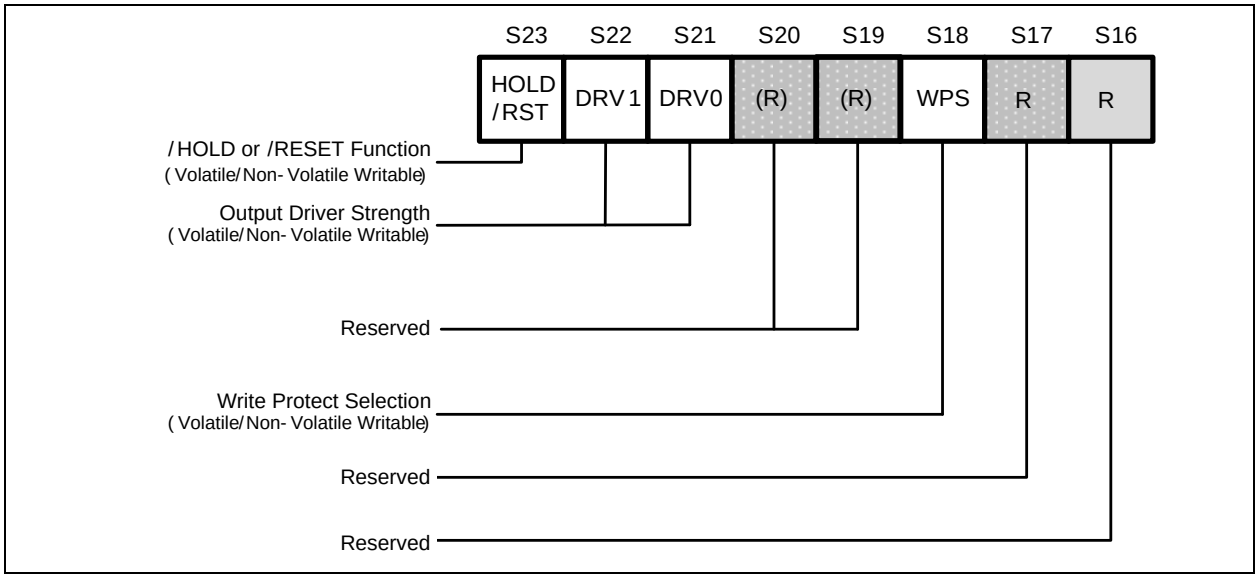

Figure 4c. Status Register-3

7.1.11 Write Protect Selection (WPS) – *Volatile/Non-Volatile Writable*

The WPS bit is used to select which Write Protect scheme should be used. When WPS=0, the device will use the combination of CMP, SEC, TB, BP[2:0] bits to protect a specific area of the memory array. When WPS=1, the device will utilize the Individual Block Locks to protect any individual sector or blocks. The default value for all Individual Block Lock bits is 1 upon device power on or after reset.

7.1.12 Output Driver Strength (DRV1, DRV0) – *Volatile/Non-Volatile Writable*

The DRV1 & DRV0 bits are used to determine the output driver strength for the Read operations.

DRV1, DRV0	Driver Strength
0, 0	100%
0, 1	75%
1, 0	50%
1, 1	25% (default)

7.1.13 /HOLD or /RESET Pin Function (HOLD/RST) – *Volatile/Non-Volatile Writable*

The HOLD/RST bit is used to determine whether /HOLD or /RESET function should be implemented on the hardware pin for 8-pin packages. When HOLD/RST=0 (factory default), the pin acts as /HOLD; when HOLD/RST=1, the pin acts as /RESET. However, /HOLD or /RESET functions are only available when QE=0. If QE is set to 1, the /HOLD and /RESET functions are disabled, the pin acts as a dedicated data I/O pin.

7.1.14 Reserved Bits – *Non Functional*

There are a few reserved Status Register bits that may be read out as a “0” or “1”. It is recommended to ignore the values of those bits. During a “Write Status Register” instruction, the Reserved Bits can be written as “0”, but there will not be any effects.

7.1.15 W25Q128JV Status Register Memory Protection (WPS = 0, CMP = 0)

STATUS REGISTER[1]					W25Q128JV (128M-BIT) MEMORY PROTECTION[3]			
SEC	TB	BP2	BP1	BP0	PROTECTED BLOCK(S)	PROTECTED ADDRESSES	PROTECTED DENSITY	PROTECTED PORTION[2]
X	X	0	0	0	NONE	NONE	NONE	NONE
0	0	0	0	1	252 thru 255	FC0000h – FFFFFFh	256KB	Upper 1/64
0	0	0	1	0	248 thru 255	F80000h – FFFFFFh	512KB	Upper 1/32
0	0	0	1	1	240 thru 255	F00000h – FFFFFFh	1MB	Upper 1/16
0	0	1	0	0	224 thru 255	E00000h – FFFFFFh	2MB	Upper 1/8
0	0	1	0	1	192 thru 255	C00000h – FFFFFFh	4MB	Upper 1/4
0	0	1	1	0	128 thru 255	800000h – FFFFFFh	8MB	Upper 1/2
0	1	0	0	1	0 thru 3	000000h – 03FFFFh	256KB	Lower 1/64
0	1	0	1	0	0 thru 7	000000h – 07FFFFh	512KB	Lower 1/32
0	1	0	1	1	0 thru 15	000000h – 0FFFFFh	1MB	Lower 1/16
0	1	1	0	0	0 thru 31	000000h – 1FFFFFh	2MB	Lower 1/8
0	1	1	0	1	0 thru 63	000000h – 3FFFFFh	4MB	Lower 1/4
0	1	1	1	0	0 thru 127	000000h – 7FFFFFh	8MB	Lower 1/2
X	X	1	1	1	0 thru 255	000000h – FFFFFFh	16MB	ALL
1	0	0	0	1	255	FFF000h – FFFFFFh	4KB	U - 1/4096
1	0	0	1	0	255	FFE000h – FFFFFFh	8KB	U - 1/2048
1	0	0	1	1	255	FFC000h – FFFFFFh	16KB	U - 1/1024
1	0	1	0	X	255	FF8000h – FFFFFFh	32KB	U - 1/512
1	1	0	0	1	0	000000h – 000FFFh	4KB	L - 1/4096
1	1	0	1	0	0	000000h – 001FFFh	8KB	L - 1/2048
1	1	0	1	1	0	000000h – 003FFFh	16KB	L - 1/1024
1	1	1	0	X	0	000000h – 007FFFh	32KB	L - 1/512

Notes:

1. X = don't care
2. L = Lower; U = Upper
3. If any Erase or Program command specifies a memory region that contains protected data portion, this command will be ignored.

7.1.16 W25Q128JV Status Register Memory Protection (WPS = 0, CMP = 1)

STATUS REGISTER[1]					W25Q128JV (128M-BIT) MEMORY PROTECTION[3]			
SEC	TB	BP2	BP1	BP0	PROTECTED BLOCK(S)	PROTECTED ADDRESSES	PROTECTED DENSITY	PROTECTED PORTION[2]
X	X	0	0	0	0 thru 255	000000h - FFFFFFh	16MB	ALL
0	0	0	0	1	0 thru 251	000000h - FBFFFFh	16,128KB	Lower 63/64
0	0	0	1	0	0 thru 247	000000h – F7FFFFh	15,872KB	Lower 31/32
0	0	0	1	1	0 thru 239	000000h - EFFFFFh	15MB	Lower 15/16
0	0	1	0	0	0 thru 223	000000h - DFFFFFh	14MB	Lower 7/8
0	0	1	0	1	0 thru 191	000000h - BFFFFFh	12MB	Lower 3/4
0	0	1	1	0	0 thru 127	000000h - 7FFFFFh	8MB	Lower 1/2
0	1	0	0	1	4 thru 255	040000h - FFFFFFh	16,128KB	Upper 63/64
0	1	0	1	0	8 thru 255	080000h - FFFFFFh	15,872KB	Upper 31/32
0	1	0	1	1	16 thru 255	100000h - FFFFFFh	15MB	Upper 15/16
0	1	1	0	0	32 thru 255	200000h - FFFFFFh	14MB	Upper 7/8
0	1	1	0	1	64 thru 255	400000h - FFFFFFh	12MB	Upper 3/4
0	1	1	1	0	128 thru 255	800000h - FFFFFFh	8MB	Upper 1/2
X	X	1	1	1	NONE	NONE	NONE	NONE
1	0	0	0	1	0 thru 255	000000h – FFEFFFh	16,380KB	L - 4095/4096
1	0	0	1	0	0 thru 255	000000h – FFDFFFh	16,376KB	L - 2047/2048
1	0	0	1	1	0 thru 255	000000h – FFBFFFh	16,368KB	L - 1023/1024
1	0	1	0	X	0 thru 255	000000h – FF7FFFh	16,352KB	L - 511/512
1	1	0	0	1	0 thru 255	001000h – FFFFFFh	16,380KB	U - 4095/4096
1	1	0	1	0	0 thru 255	002000h – FFFFFFh	16,376KB	U - 2047/2048
1	1	0	1	1	0 thru 255	004000h – FFFFFFh	16,368KB	U -1023/1024
1	1	1	0	X	0 thru 255	008000h – FFFFFFh	16,352KB	U - 511/512

Notes:
1. X = don't care
2. L = Lower; U = Upper
3. If any Erase or Program command specifies a memory region that contains protected data portion, this command will be ignored.

7.1.17 W25Q128JV Individual Block Memory Protection (WPS=1)

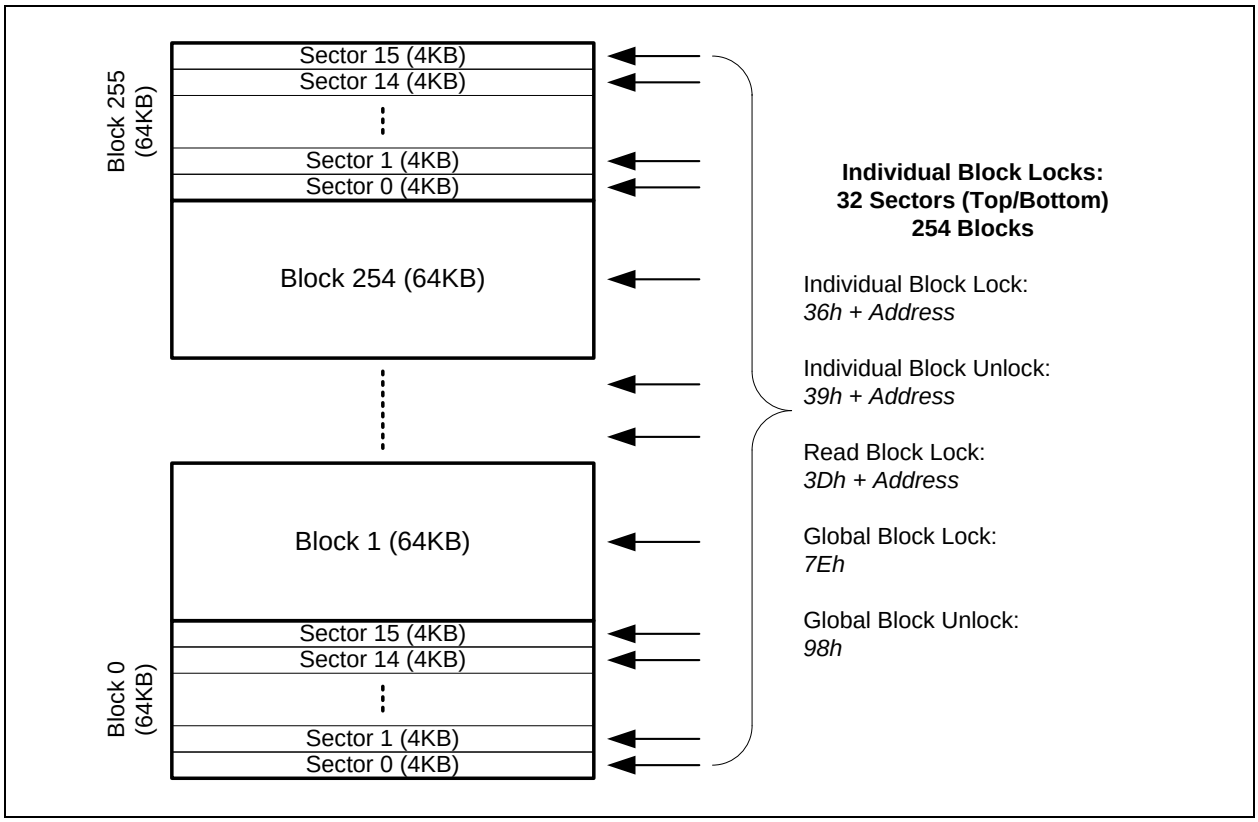

Figure 4d. Individual Block/Sector Locks

Notes:

1. Individual Block/Sector protection is only valid when WPS=1.
2. All individual block/sector lock bits are set to 1 by default after power up, all memory array is protected.

8. INSTRUCTIONS

The Standard/Dual/Quad SPI instruction set of the W25Q128JV consists of 47 basic instructions that are fully controlled through the SPI bus (see Instruction Set Table1-2). Instructions are initiated with the falling edge of Chip Select (/CS). The first byte of data clocked into the DI input provides the instruction code. Data on the DI input is sampled on the rising edge of clock with most significant bit (MSB) first.

The QPI instruction set of the W25Q128JV consists of 36 basic instructions that are fully controlled through the SPI bus (see Instruction Set Table 3). Instructions are initiated with the falling edge of Chip Select (/CS). The first byte of data clocked through IO[3:0] pins provides the instruction code. Data on all four IO pins are sampled on the rising edge of clock with most significant bit (MSB) first. All QPI instructions, addresses, data and dummy bytes are using all four IO pins to transfer every byte of data with every two serial clocks (CLK).

Instructions vary in length from a single byte to several bytes and may be followed by address bytes, data bytes, dummy bytes (don't care), and in some cases, a combination. Instructions are completed with the rising edge of edge /CS. Clock relative timing diagrams for each instruction are included in Figures 5 through 57. All read instructions can be completed after any clocked bit. However, all instructions that Write, Program or Erase must complete on a byte boundary (/CS driven high after a full 8-bits have been clocked) otherwise the instruction will be ignored. This feature further protects the device from inadvertent writes. Additionally, while the memory is being programmed or erased, or when the Status Register is being written, all instructions except for Read Status Register will be ignored until the program or erase cycle has completed.

8.1 Device ID and Instruction Set Tables

8.1.1 Manufacturer and Device Identification

MANUFACTURER ID	**(MF7 - MF0)**	
Winbond Serial Flash	EFh	
Device ID	**(ID7 - ID0)**	**(ID15 - ID0)**
Instruction	**ABh, 90h, 92h, 94h**	**9Fh**
W25Q128JV	17h	7018h

8.1.2 Instruction Set Table 1 (Standard SPI Instructions)[1]

Data Input Output	Byte 1	Byte 2	Byte 3	Byte 4	Byte 5	Byte 6	Byte 7
Number of Clock(1-1-1)	**8**	**8**	**8**	**8**	**8**	**8**	**8**
Write Enable	**06h**						
Volatile SR Write Enable	**50h**						
Write Disable	**04h**						
Release Power-down / ID	**ABh**	Dummy	Dummy	Dummy	(ID7-ID0)[2]		
Manufacturer/Device ID	**90h**	Dummy	Dummy	00h	(MF7-MF0)	(ID7-ID0)	
JEDEC ID	**9Fh**	(MF7-MF0)	(ID15-ID8)	(ID7-ID0)			
Read Unique ID	**4Bh**	Dummy	Dummy	Dummy	Dummy	(UID63-0)	
Read Data	**03h**	A23-A16	A15-A8	A7-A0	(D7-D0)		
Fast Read	**0Bh**	A23-A16	A15-A8	A7-A0	Dummy	(D7-D0)	
Page Program	**02h**	A23-A16	A15-A8	A7-A0	D7-D0	D7-D0[3]	
Sector Erase (4KB)	**20h**	A23-A16	A15-A8	A7-A0			
Block Erase (32KB)	**52h**	A23-A16	A15-A8	A7-A0			
Block Erase (64KB)	**D8h**	A23-A16	A15-A8	A7-A0			
Chip Erase	**C7h/60h**						
Read Status Register-1	**05h**	(S7-S0)[2]					
Write Status Register-1[4]	**01h**	(S7-S0)[4]					
Read Status Register-2	**35h**	(S15-S8)[2]					
Write Status Register-2	**31h**	(S15-S8)					
Read Status Register-3	**15h**	(S23-S16)[2]					
Write Status Register-3	**11h**	(S23-S16)					
Read SFDP Register	**5Ah**	A23-A16	A15-A8	A7-A0	Dummy	(D7-D0)	
Erase Security Register[5]	**44h**	A23-A16	A15-A8	A7-A0			
Program Security Register[5]	**42h**	A23-A16	A15-A8	A7-A0	D7-D0	D7-D0[3]	
Read Security Register[5]	**48h**	A23-A16	A15-A8	A7-A0	Dummy	(D7-D0)	
Global Block Lock	**7Eh**						
Global Block Unlock	**98h**						
Read Block Lock	**3Dh**	A23-A16	A15-A8	A7-A0	(L7-L0)		
Individual Block Lock	**36h**	A23-A16	A15-A8	A7-A0			
Individual Block Unlock	**39h**	A23-A16	A15-A8	A7-A0			
Erase / Program Suspend	**75h**						
Erase / Program Resume	**7Ah**						
Power-down	**B9h**						
Enter QPI Mode	**38h**						
Enable Reset	**66h**						
Reset Device	**99h**						

8.1.3 Instruction Set Table 2 (Dual/Quad SPI Instructions)

Data Input Output	Byte 1	Byte 2	Byte 3	Byte 4	Byte 5	Byte 6	Byte 7	Byte 8	Byte 9
Number of Clock(1-1-2)	**8**	**8**	**8**	**8**	**4**	**4**	**4**	**4**	**4**
Fast Read Dual Output	**3Bh**	A23-A16	A15-A8	A7-A0	Dummy	Dummy	(D7-D0)(7)	…	
Number of Clock(1-2-2)	**8**	**4**	**4**	**4**	**4**	**4**	**4**	**4**	**4**
Fast Read Dual I/O	**BBh**	A23-A16(6)	A15-A8(6)	A7-A0(6)	M7-M0	(D7-D0)(7)	…		
Mftr./Device ID Dual I/O	**92h**	A23-A16(6)	A15-A8(6)	00(6)	Dummy(14)	(MF7-MF0)	(ID7-ID0)(7)		
Number of Clock(1-1-4)	**8**	**8**	**8**	**8**	**2**	**2**	**2**	**2**	**2**
Quad Input Page Program	**32h**	A23-A16	A15-A8	A7-A0	(D7-D0)(9)	(D7-D0)(3)	…		
Fast Read Quad Output	**6Bh**	A23-A16	A15-A8	A7-A0	Dummy	Dummy	Dummy	Dummy	(D7-D0)(10)
Number of Clock(1-4-4)	**8**	**2**(8)	**2**(8)	**2**(8)	**2**	**2**	**2**	**2**	**2**
Mftr./Device ID Quad I/O	**94h**	A23-A16	A15-A8	00	Dummy(14)	Dummy	Dummy	(MF7-MF0)	(ID7-ID0)
Fast Read Quad I/O	**EBh**	A23-A16	A15-A8	A7-A0	M7-M0	Dummy	Dummy	(D7-D0)	…
Set Burst with Wrap	**77h**	Dummy	Dummy	Dummy	W7-W0				

8.1.4 Instruction Set Table 3 (QPI Instructions)(11)

Data Input Output	Byte 1	Byte 2	Byte 3	Byte 4	Byte 5	Byte 6	Byte 7
Number of Clock (4-4-4)	**2**	**2**	**2**	**2**	**2**	**2**	**2**
Write Enable	**06h**						
Volatile SR Write Enable	**50h**						
Write Disable	**04h**						
Release Power-down / ID	**ABh**	Dummy	Dummy	Dummy	(ID7-ID0)(2)		
Manufacturer/Device ID	**90h**	Dummy	Dummy	00h	(MF7-MF0)	(ID7-ID0)	
JEDEC ID	**9Fh**	(MF7-MF0)	(ID15-ID8)	(ID7-ID0)			
Set Read Parameters	**C0h**	P7-P0					
Fast Read	**0Bh**	A23-A16	A15-A8	A7-A0	Dummy(12)	(D7-D0)	…
Burst Read with Wrap(13)	**0Ch**	A23-A16	A15-A8	A7-A0	Dummy(12)	(D7-D0)	…
Fast Read Quad I/O	**EBh**	A23-A16	A15-A8	A7-A0	M7-M0(12)	(D7-D0)	…
Page Program	**02h**	A23-A16	A15-A8	A7-A0	D7-D0(9)	D7-D0(3)	…
Sector Erase (4KB)	**20h**	A23-A16	A15-A8	A7-A0			
Block Erase (32KB)	**52h**	A23-A16	A15-A8	A7-A0			
Block Erase (64KB)	**D8h**	A23-A16	A15-A8	A7-A0			
Chip Erase	**C7h/60h**						
Read Status Register-1	**05h**	(S7-S0)(2)					
Write Status Register-1(4)	**01h**	(S7-S0)(4)					
Read Status Register-2	**35h**	(S15-S8)(2)					
Write Status Register-2	**31h**	(S15-S8)					
Read Status Register-3	**15h**	(S23-S16)(2)					
Write Status Register-3	**11h**	(S23-S16)					
Global Block Lock	**7Eh**						
Global Block Unlock	**98h**						
Read Block Lock	**3Dh**	A23-A16	A15-A8	A7-A0	(L7-L0)		
Individual Block Lock	**36h**	A23-A16	A15-A8	A7-A0			
Individual Block Unlock	**39h**	A23-A16	A15-A8	A7-A0			
Erase / Program Suspend	**75h**						
Erase / Program Resume	**7Ah**						
Power-down	**B9h**						
Enable Reset	**66h**						
Reset Device	**99h**						
Exit QPI Mode	**FFh**						

8.1.5 Instruction Set Table 4 (DTR with SPI Instructions)

Data Input Output	Byte 1	Byte 2	Byte 3	Byte 4	Byte 5	Byte 6	Byte 7
Number of Clock(1-1-1)	8	4	4	4	6	4	4
DTR Fast Read	**0Dh**	A23-A16	A15-A8	A7-A0	Dummy	(D7-D0)	…
Number of Clock(1-2-2)	8	2	2	2	6	2	2
DTR Fast Read Dual I/O	**BDh**	A23-A16	A15-A8	A7-A0	M7-M0 Dummy	(D7-D0)	….
Number of Clock(1-4-4)	8	1	1	1	8	1	1
DTR Fast Read Quad	**EDh**	A23-A16	A15-A8	A7-A0	M7-M0 Dummy	(D7-D0)	….

8.1.6 Instruction Set Table 5 (DTR with QPI Instructions)

Data Input Output	Byte 1	Byte 2	Byte 3	Byte 4	Byte 5	Byte 6	Byte 7
Number of Clock (4-4-4)	2	1	1	1	8	1	1
DTR Read with Wrap(13)	**0Eh**	A23-A16	A15-A8	A7-0	Dummy	(D7-D0)	…
DTR Fast Read	**0Dh**	A23-A16	A15-A8	A7-A0	Dummy	(D7-D0)	…
DTR Fast Read	**EDh**	A23-A16	A15-A8	A7-A0	M7-M0 Dummy	(D7-D0)	

Notes:

1. Data bytes are shifted with Most Significant Bit first. Byte fields with data in parenthesis "( )" indicate data output from the device on either 1, 2 or 4 IO pins.
2. The Status Register contents and Device ID will repeat continuously until /CS terminates the instruction.
3. At least one byte of data input is required for Page Program, Quad Page Program and Program Security Registers, up to 256 bytes of data input. If more than 256 bytes of data are sent to the device, the addressing will wrap to the beginning of the page and overwrite previously sent data.
4. Write Status Register-1 (01h) can also be used to program Status Register-1&2, see section 8.2.5.
5. Security Register Address:
   Security Register 1: A23-16 = 00h; A15-8 = 10h; A7-0 = byte address
   Security Register 2: A23-16 = 00h; A15-8 = 20h; A7-0 = byte address
   Security Register 3: A23-16 = 00h; A15-8 = 30h; A7-0 = byte address
6. Dual SPI address input format:
   IO0 = A22, A20, A18, A16, A14, A12, A10, A8 A6, A4, A2, A0, M6, M4, M2, M0
   IO1 = A23, A21, A19, A17, A15, A13, A11, A9 A7, A5, A3, A1, M7, M5, M3, M1
7. Dual SPI data output format:
   IO0 = (D6, D4, D2, D0)
   IO1 = (D7, D5, D3, D1)
8. Quad SPI address input format:
   IO0 = A20, A16, A12, A8, A4, A0, M4, M0
   IO1 = A21, A17, A13, A9, A5, A1, M5, M1
   IO2 = A22, A18, A14, A10, A6, A2, M6, M2
   IO3 = A23, A19, A15, A11, A7, A3, M7, M3

   Set Burst with Wrap input format:
   IO0 = x, x, x, x, x, x, W4, x
   IO1 = x, x, x, x, x, x, W5, x
   IO2 = x, x, x, x, x, x, W6, x
   IO3 = x, x, x, x, x, x, x
9. Quad SPI data input/output format:
   IO0 = (D4, D0, …..)
   IO1 = (D5, D1, …..)
   IO2 = (D6, D2, …..)
   IO3 = (D7, D3, …..)
10. Fast Read Quad I/O data output format:
    IO0 = (x, x, x, x, D4, D0, D4, D0)
    IO1 = (x, x, x, x, D5, D1, D5, D1)
    IO2 = (x, x, x, x, D6, D2, D6, D2)
    IO3 = (x, x, x, x, D7, D3, D7, D3)
11. QPI Command, Address, Data input/output format:

CLK # 0	*1*	*2*	*3*	*4*	*5*	*6*	*7*	*8*	*9*	*10*	*11*
IO0 = C4,	C0,	A20,	A16,	A12,	A8,	A4,	A0,	D4,	D0,	D4,	D0
IO1 = C5,	C1,	A21,	A17,	A13,	A9,	A5,	A1,	D5,	D1,	D5,	D1
IO2 = C6,	C2,	A22,	A18,	A14,	A10,	A6,	A2,	D6,	D2,	D6,	D2
IO3 = C7,	C3,	A23,	A19,	A15,	A11,	A7,	A3,	D7,	D3,	D7,	D3

12. The number of dummy clocks for QPI Fast Read, QPI Fast Read Quad I/O & QPI Burst Read with Wrap is controlled by read parameter P7 – P4.
13. The wrap around length for QPI Burst Read with Wrap is controlled by read parameter P3 – P0.
14. The first dummy is M7-M0 should be set to Fxh

8.2 Instruction Descriptions

8.2.1 Write Enable (06h)

The Write Enable instruction (Figure 5) sets the Write Enable Latch (WEL) bit in the Status Register to a 1. The WEL bit must be set prior to every Page Program, Quad Page Program, Sector Erase, Block Erase, Chip Erase, Write Status Register and Erase/Program Security Registers instruction. The Write Enable instruction is entered by driving /CS low, shifting the instruction code “06h” into the Data Input (DI) pin on the rising edge of CLK, and then driving /CS high.

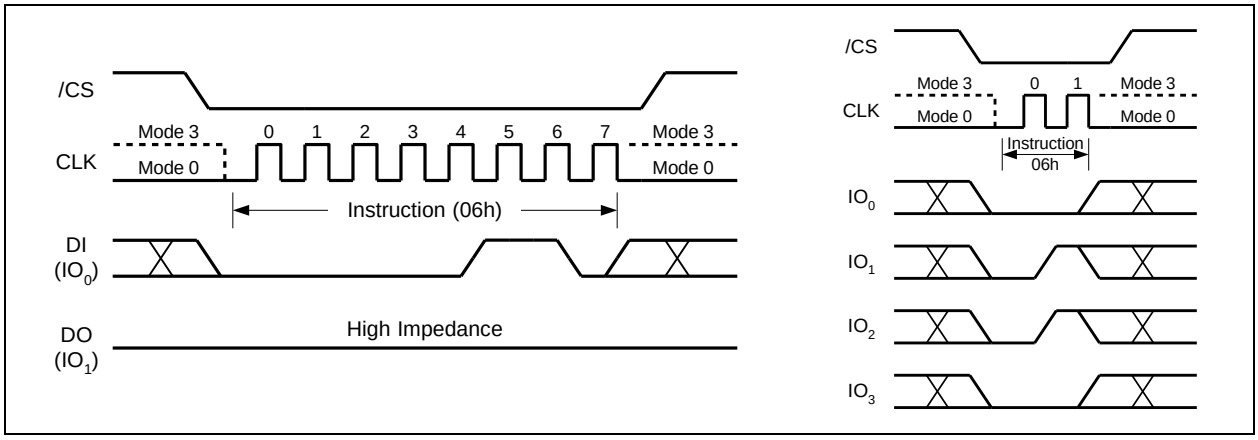

Figure 5. Write Enable Instruction for SPI Mode (left) or QPI Mode (right)

8.2.2 Write Enable for Volatile Status Register (50h)

The non-volatile Status Register bits described in section 7.1 can also be written to as volatile bits. This gives more flexibility to change the system configuration and memory protection schemes quickly without waiting for the typical non-volatile bit write cycles or affecting the endurance of the Status Register non-volatile bits. To write the volatile values into the Status Register bits, the Write Enable for Volatile Status Register (50h) instruction must be issued prior to a Write Status Register (01h) instruction. Write Enable for Volatile Status Register instruction (Figure 6) will not set the Write Enable Latch (WEL) bit, it is only valid for the Write Status Register instruction to change the volatile Status Register bit values.

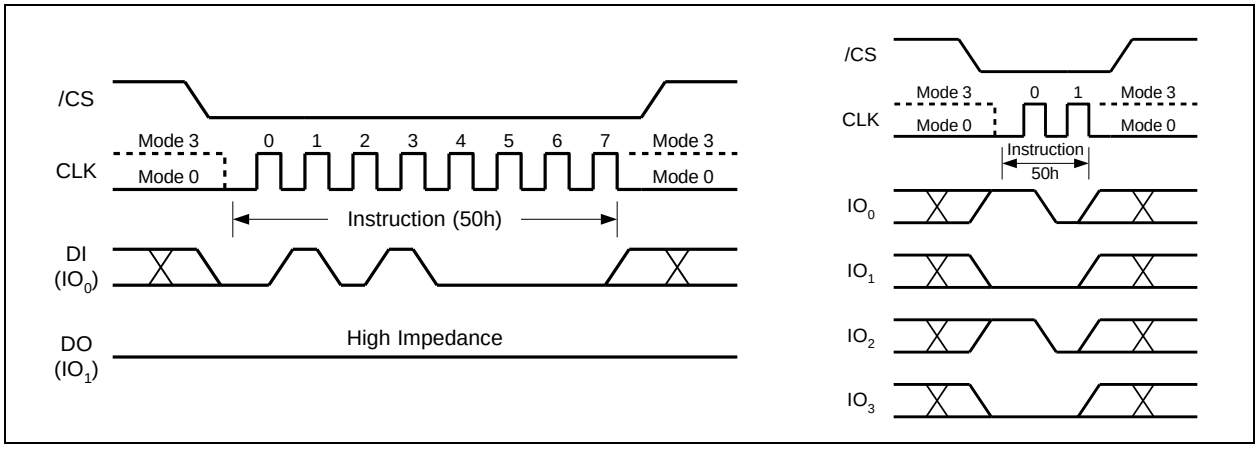

Figure 6. Write Enable for Volatile Status Register Instruction for SPI Mode (left) or QPI Mode (right)

8.2.3 Write Disable (04h)

The Write Disable instruction (Figure 7) resets the Write Enable Latch (WEL) bit in the Status Register to a 0. The Write Disable instruction is entered by driving /CS low, shifting the instruction code “04h” into the DI pin and then driving /CS high. Note that the WEL bit is automatically reset after Power-up and upon completion of the Write Status Register, Erase/Program Security Registers, Page Program, Quad Page Program, Sector Erase, Block Erase, Chip Erase and Reset instructions.

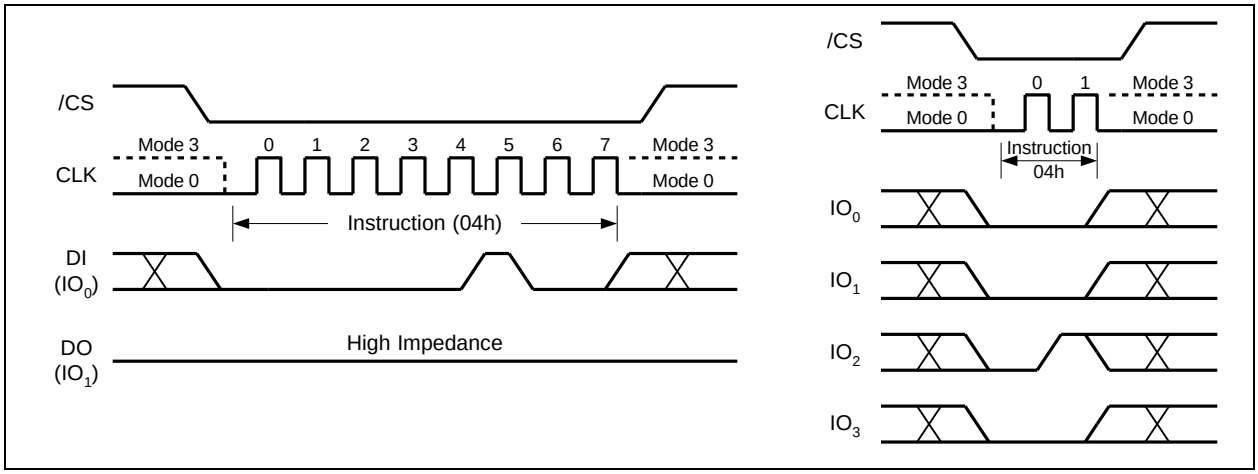

Figure 7. Write Disable Instruction for SPI Mode (left) or QPI Mode (right)

8.2.4 Read Status Register-1 (05h), Status Register-2 (35h) & Status Register-3 (15h)

The Read Status Register instructions allow the 8-bit Status Registers to be read. The instruction is entered by driving /CS low and shifting the instruction code “05h” for Status Register-1, “35h” for Status Register-2 or “15h” for Status Register-3 into the DI pin on the rising edge of CLK. The status register bits are then shifted out on the DO pin at the falling edge of CLK with most significant bit (MSB) first as shown in Figure 8. Refer to section 7.1 for Status Register descriptions.

The Read Status Register instruction may be used at any time, even while a Program, Erase or Write Status Register cycle is in progress. This allows the BUSY status bit to be checked to determine when the cycle is complete and if the device can accept another instruction. The Status Register can be read continuously, as shown in Figure 8. The instruction is completed by driving /CS high.

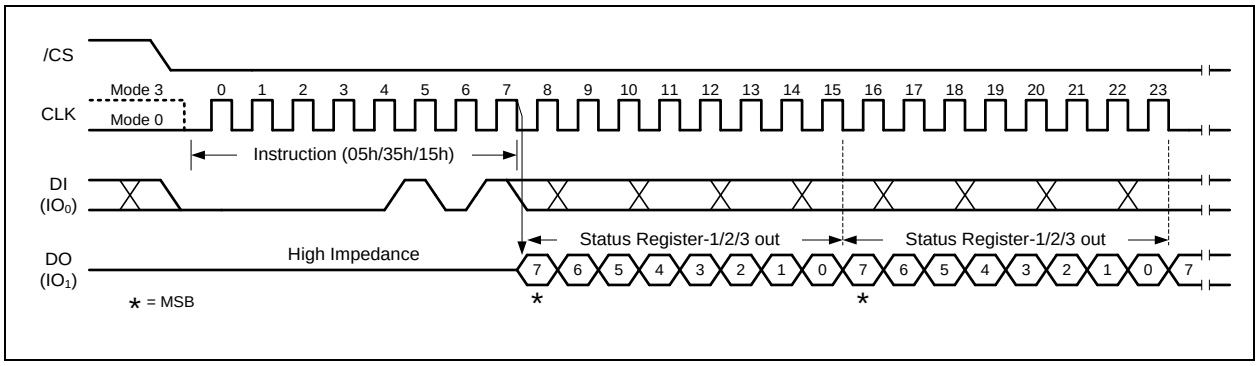

Figure 8a. Read Status Register Instruction (SPI Mode)

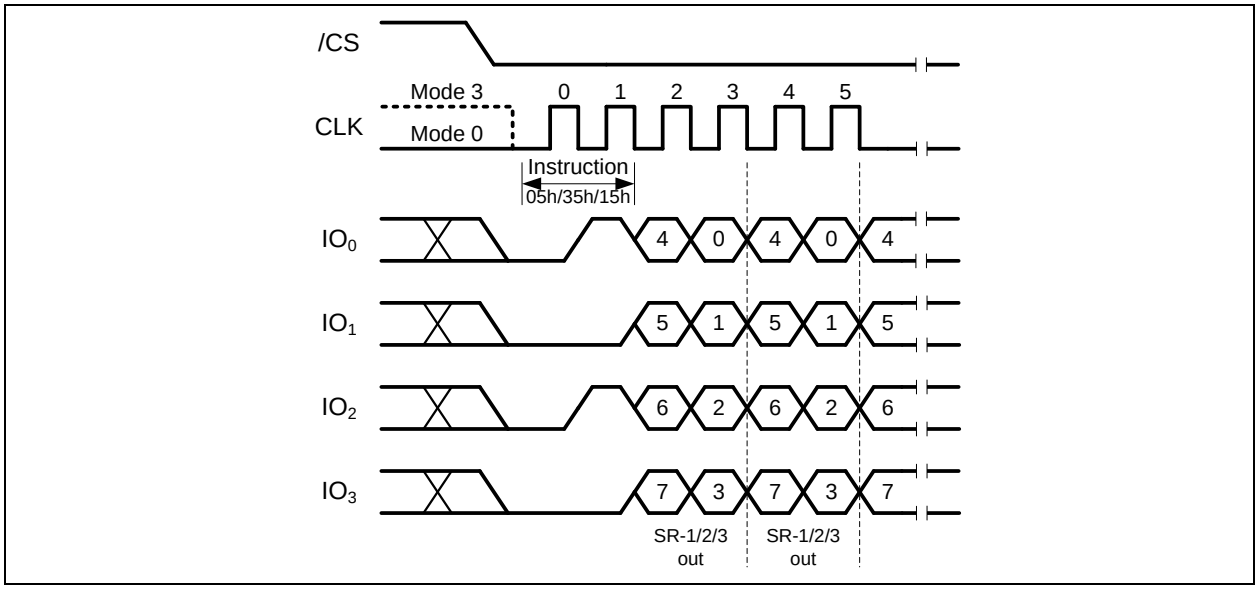

Figure 8b. Read Status Register Instruction (QPI Mode)

8.2.5 Write Status Register-1 (01h), Status Register-2 (31h) & Status Register-3 (11h)

The Write Status Register instruction allows the Status Registers to be written. The writable Status Register bits include: SRP, SEC, TB, BP[2:0] in Status Register-1; CMP, LB[3:1], QE, SRL in Status Register-2; HOLD/RST, DRV1, DRV0, and WPS in Status Register-3. All other Status Register bit locations are read-only and will not be affected by the Write Status Register instruction. LB[3:1] are non-volatile OTP bits, once it is set to 1, it cannot be cleared to 0.

To write non-volatile Status Register bits, a standard Write Enable (06h) instruction must previously have been executed for the device to accept the Write Status Register instruction (Status Register bit WEL must equal 1). Once write enabled, the instruction is entered by driving /CS low, sending the instruction code "01h/31h/11h", and then writing the status register data byte as illustrated in Figure 9a & 9b.

To write volatile Status Register bits, a Write Enable for Volatile Status Register (50h) instruction must have been executed prior to the Write Status Register instruction (Status Register bit WEL remains 0). However, SRL and LB[3:1] cannot be changed from "1" to "0" because of the OTP protection for these bits. Upon power off or the execution of a Software/Hardware Reset, the volatile Status Register bit values will be lost, and the non-volatile Status Register bit values will be restored.

During non-volatile Status Register write operation (06h combined with 01h/31h/11h), after /CS is driven high, the self-timed Write Status Register cycle will commence for a time duration of tW (See AC Characteristics). While the Write Status Register cycle is in progress, the Read Status Register instruction may still be accessed to check the status of the BUSY bit. The BUSY bit is a 1 during the Write Status Register cycle and a 0 when the cycle is finished and ready to accept other instructions again. After the Write Status Register cycle has finished, the Write Enable Latch (WEL) bit in the Status Register will be cleared to 0.

During volatile Status Register write operation (50h combined with 01h/31h/11h), after /CS is driven high, the Status Register bits will be refreshed to the new values within the time period of t_{SHSL2} (See AC Characteristics). BUSY bit will remain 0 during the Status Register bit refresh period.

The Write Status Register instruction can be used in both SPI mode and QPI mode. However, the QE bit cannot be written to when the device is in the QPI mode, because QE=1 is required for the device to enter and operate in the QPI mode.refer to section 7.1 for Status Register descriptions.

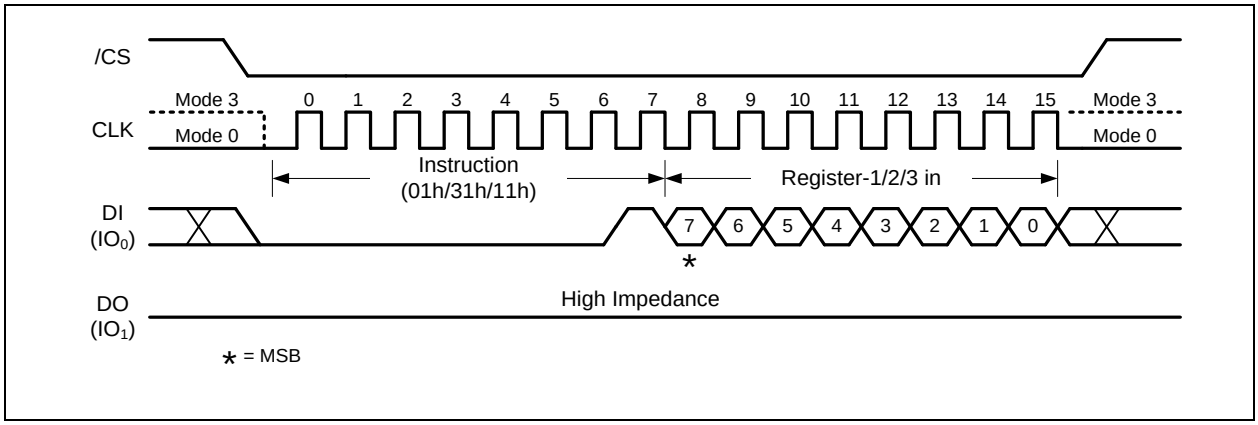

Figure 9a. Write Status Register-1/2/3 Instruction (SPI Mode)

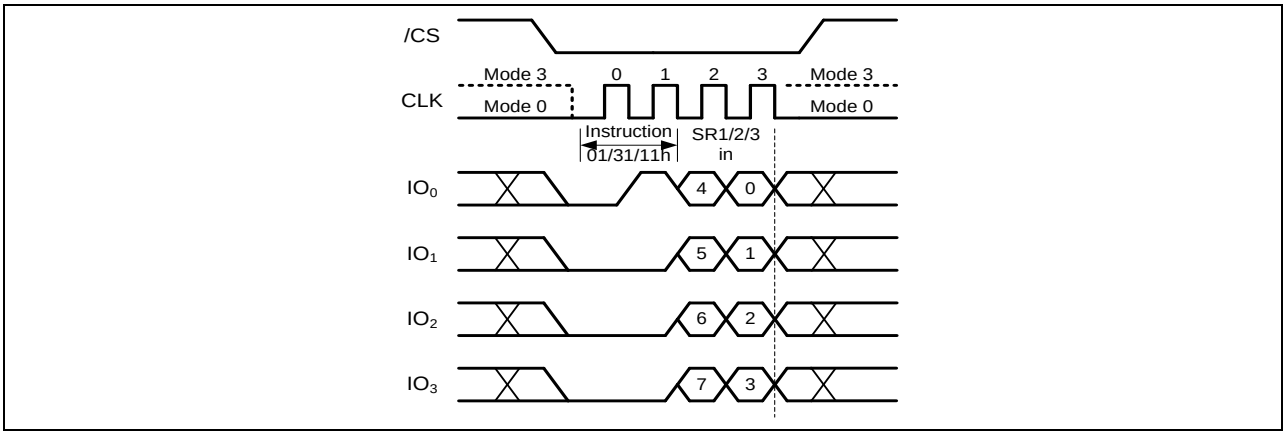

Figure 9b. Write Status Register-1/2/3 Instruction (QPI Mode)

The W25Q128JV is also backward compatible to Winbond's previous generations of serial flash memories, in which the Status Register-1&2 can be written using a single "Write Status Register-1 (01h)" command. To complete the Write Status Register-1&2 instruction, the /CS pin must be driven high after the sixteenth bit of data that is clocked in as shown in Figure 9c & 9d. If /CS is driven high after the eighth clock, the Write Status Register-1 (01h) instruction will only program the Status Register-1, the Status Register-2 will not be affected (Previous generations will clear CMP and QE bits).

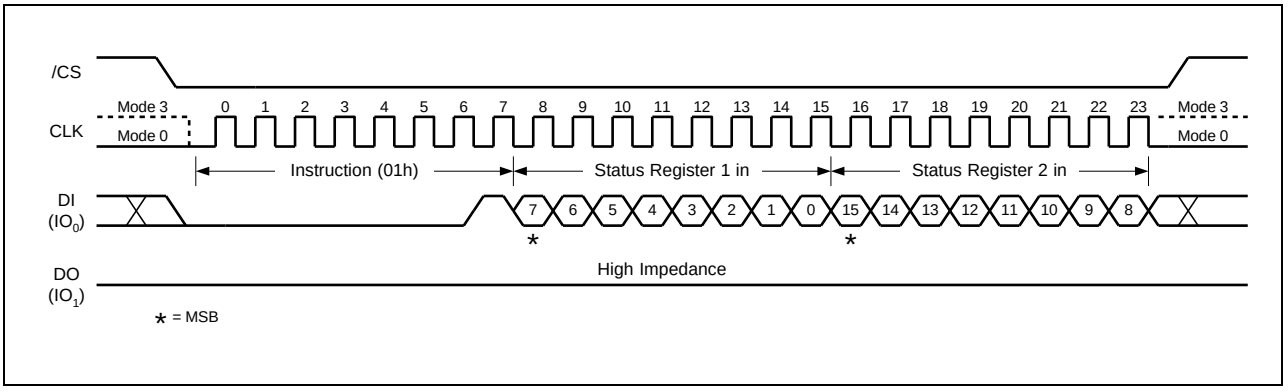

Figure 9c. Write Status Register-1/2 Instruction (SPI Mode)

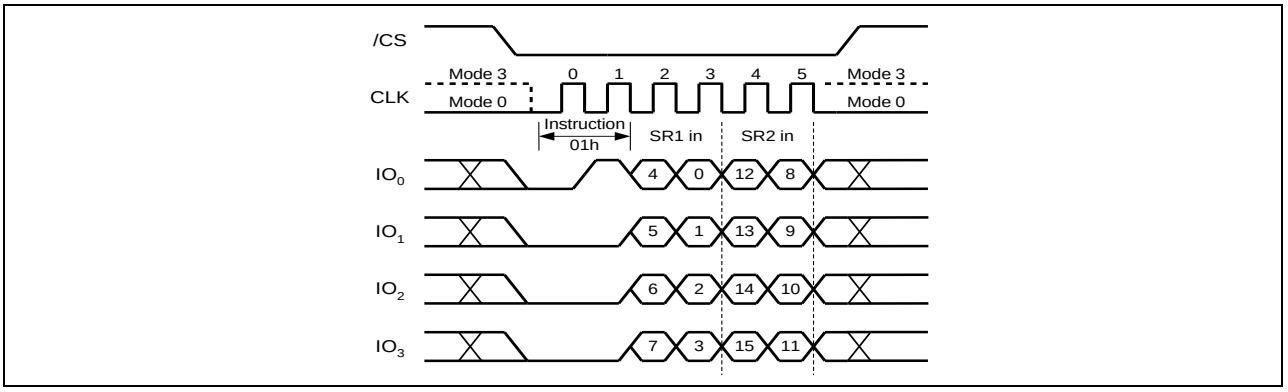

Figure 9d. Write Status Register-1/2 Instruction (QPI Mode)

8.2.6 Read Data (03h)

The Read Data instruction allows one or more data bytes to be sequentially read from the memory. The instruction is initiated by driving the /CS pin low and then shifting the instruction code “03h” followed by a 24-bit address (A23-A0) into the DI pin. The code and address bits are latched on the rising edge of the CLK pin. After the address is received, the data byte of the addressed memory location will be shifted out on the DO pin at the falling edge of CLK with most significant bit (MSB) first. The address is automatically incremented to the next higher address after each byte of data is shifted out allowing for a continuous stream of data. This means that the entire memory can be accessed with a single instruction as long as the clock continues. The instruction is completed by driving /CS high.

The Read Data instruction sequence is shown in Figure 14. If a Read Data instruction is issued while an Erase, Program or Write cycle is in process (BUSY=1) the instruction is ignored and will not have any effects on the current cycle. The Read Data instruction allows clock rates from D.C. to a maximum of f_R (see AC Electrical Characteristics).

The Read Data (03h) instruction is only supported in Standard SPI mode.

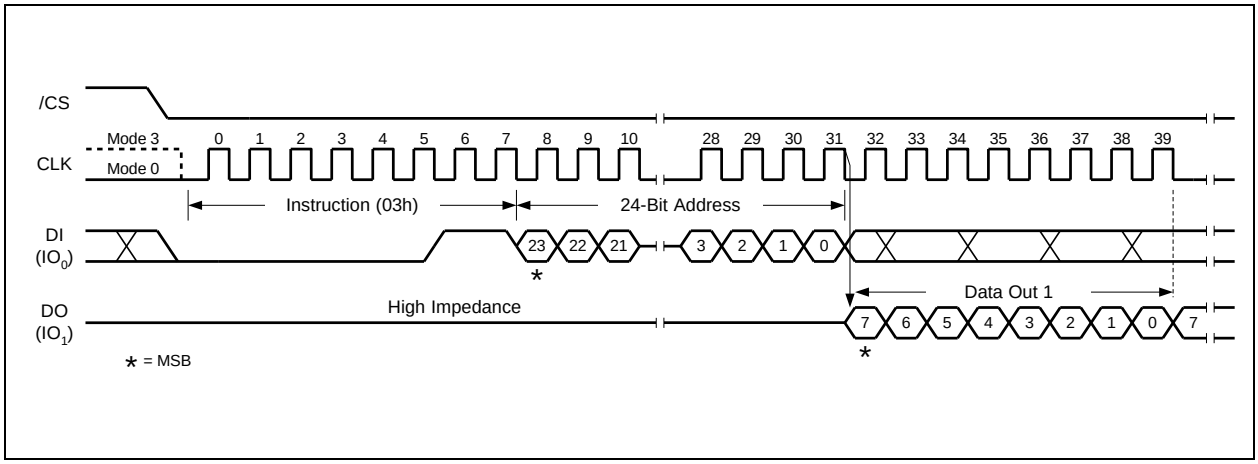

Figure 14. Read Data Instruction (SPI Mode only)

8.2.7 Fast Read (0Bh)

The Fast Read instruction is similar to the Read Data instruction except that it can operate at the highest possible frequency of FR (see AC Electrical Characteristics). This is accomplished by adding eight "dummy" clocks after the 24-bit address as shown in Figure 16. The dummy clocks allow the devices internal circuits additional time for setting up the initial address. During the dummy clocks the data value on the DO pin is a "don't care".

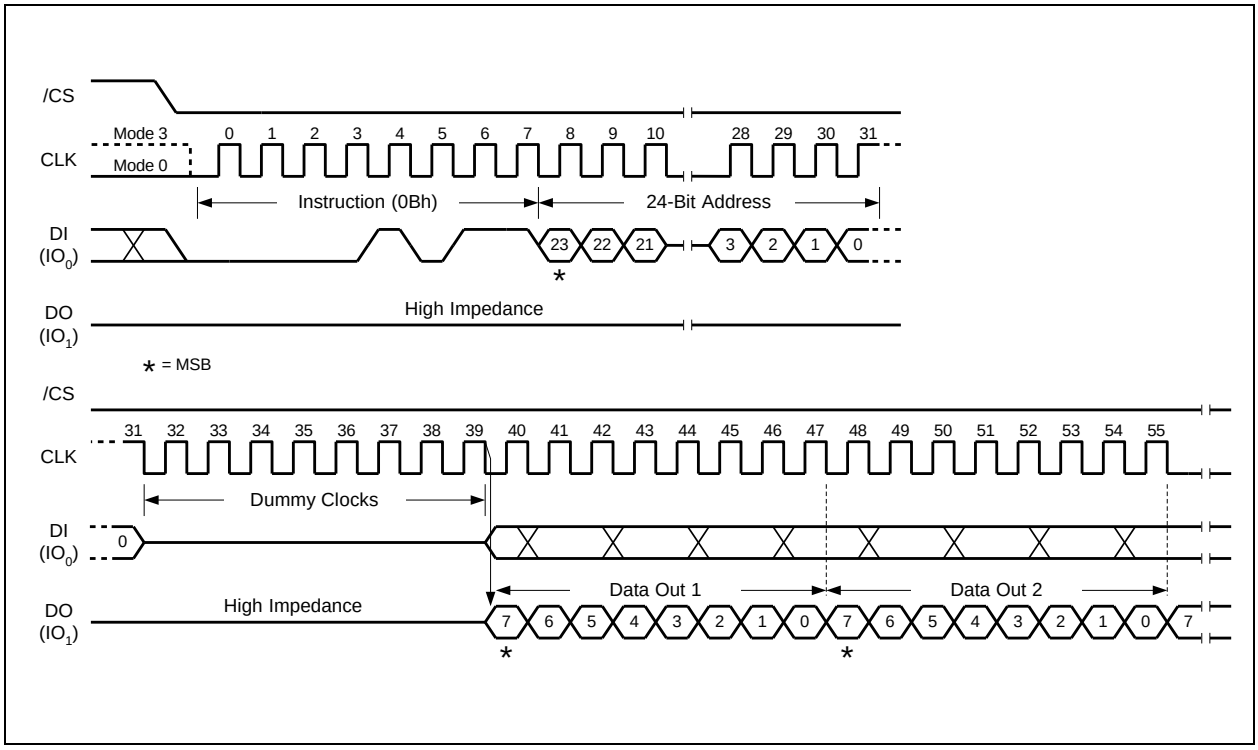

Figure 16a. Fast Read Instruction (SPI Mode)

Fast Read (0Bh) in QPI Mode

The Fast Read instruction is also supported in QPI mode. When QPI mode is enabled, the number of dummy clocks is configured by the “Set Read Parameters (C0h)” instruction to accommodate a wide range of applications with different needs for either maximum Fast Read frequency or minimum data access latency. Depending on the Read Parameter Bits P[5:4] setting, the number of dummy clocks can be configured as either 2, 4, 6 or 8. The default number of dummy clocks upon power up or after a Reset instruction is 2.

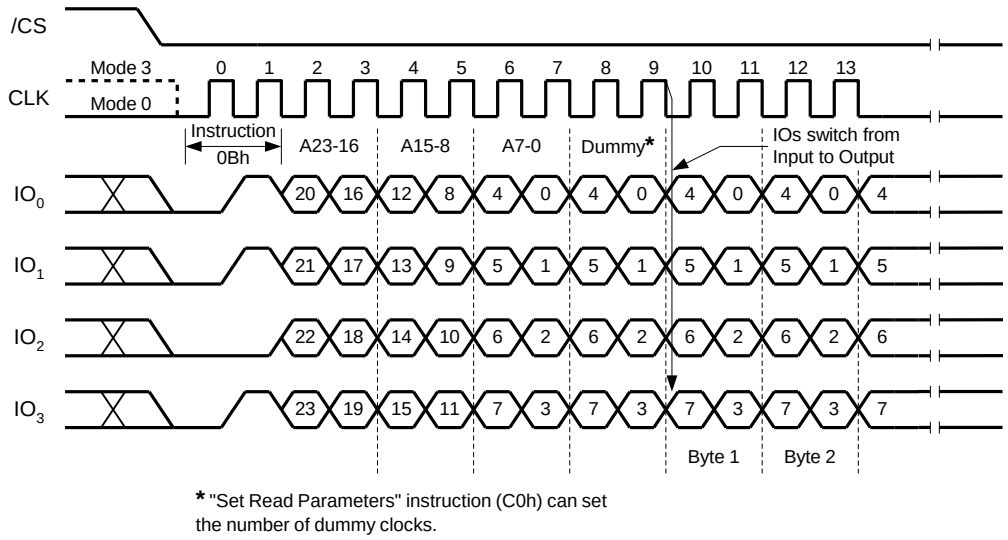

* "Set Read Parameters" instruction (C0h) can set the number of dummy clocks.

Figure 16b. Fast Read Instruction (QPI Mode)

8.2.8 DTR Fast Read (0Dh)

The DTR Fast Read instruction is similar to the Fast Read instruction except that the 24-bit address input and the data output require DTR (Double Transfer Rate) operation. This is accomplished by adding six "dummy" clocks after the 24-bit address as shown in Figure 17. The dummy clocks allow the devices internal circuits additional time for setting up the initial address. During the dummy clocks the data value on the DO pin is a "don't care".

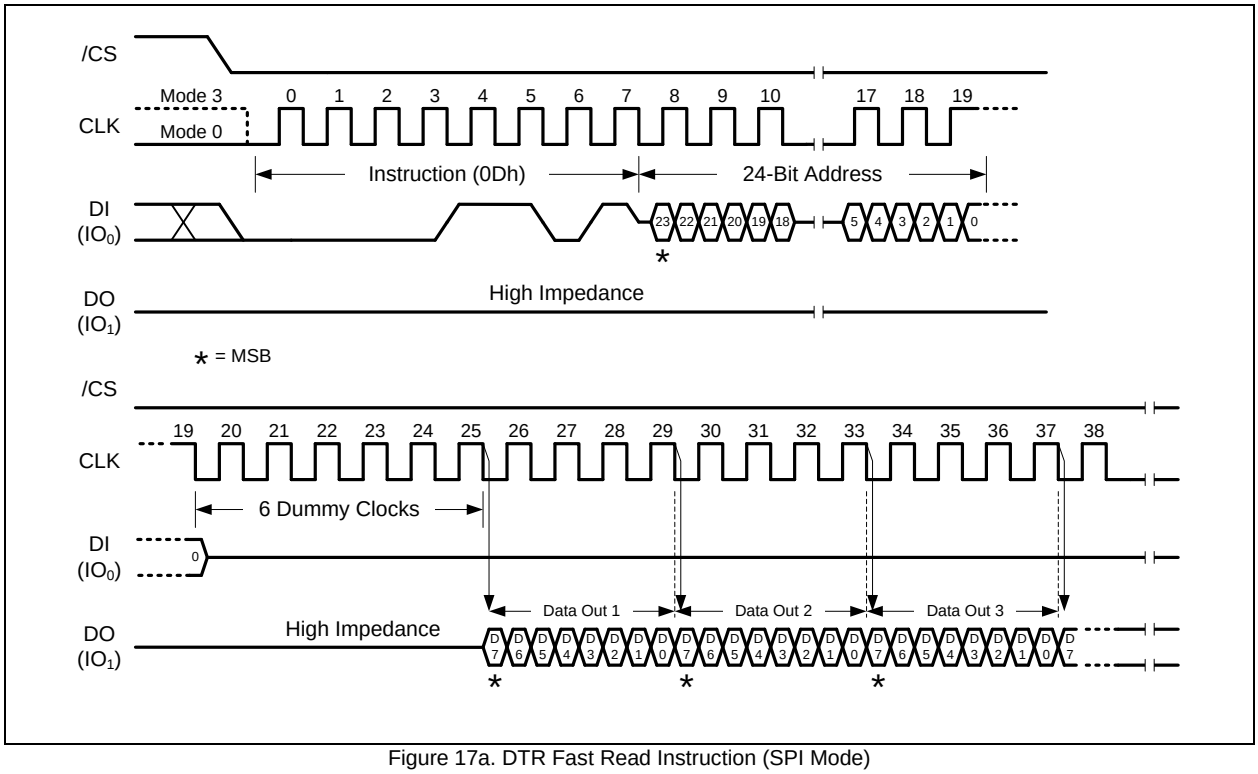

Figure 17a. DTR Fast Read Instruction (SPI Mode)

DTR Fast Read (0Dh) in QPI Mode

The DTR Fast Read instruction is also supported in QPI mode.

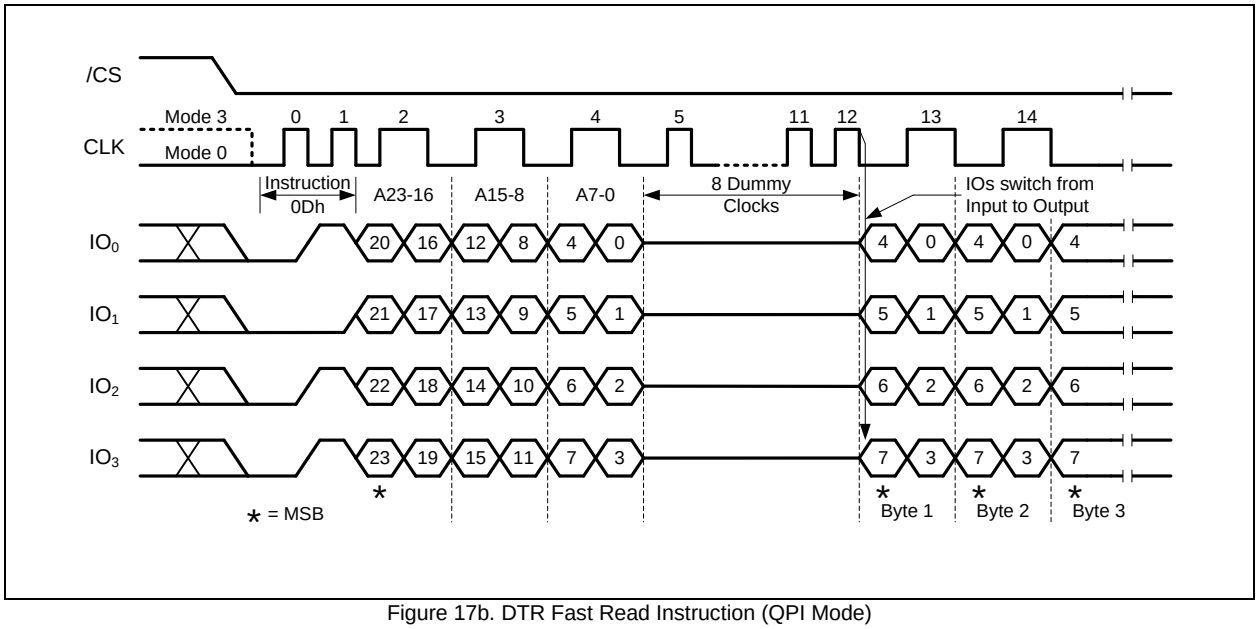

Figure 17b. DTR Fast Read Instruction (QPI Mode)

8.2.9 Fast Read Dual Output (3Bh)

The Fast Read Dual Output (3Bh) instruction is similar to the standard Fast Read (0Bh) instruction except that data is output on two pins; IO_0 and IO_1. This allows data to be transferred at twice the rate of standard SPI devices. The Fast Read Dual Output instruction is ideal for quickly downloading code from Flash to RAM upon power-up or for applications that cache code-segments to RAM for execution.

Similar to the Fast Read instruction, the Fast Read Dual Output instruction can operate at the highest possible frequency of F_R (see AC Electrical Characteristics). This is accomplished by adding eight "dummy" clocks after the 24-bit address as shown in Figure 18. The dummy clocks allow the device's internal circuits additional time for setting up the initial address. The input data during the dummy clocks is "don't care". However, the IO_0 pin should be high-impedance prior to the falling edge of the first data out clock.

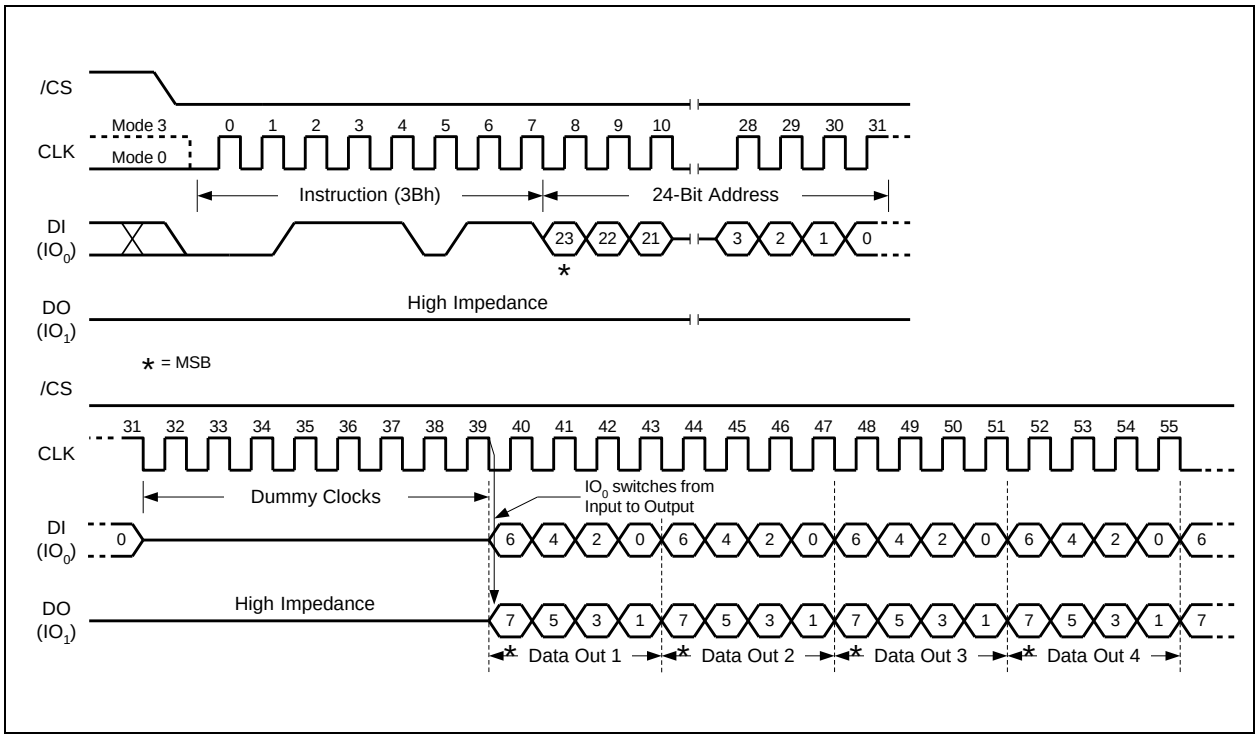

Figure 18. Fast Read Dual Output Instruction (SPI Mode only)

8.2.10 Fast Read Quad Output (6Bh)

The Fast Read Quad Output (6Bh) instruction is similar to the Fast Read Dual Output (3Bh) instruction except that data is output on four pins, IO_0, IO_1, IO_2, and IO_3. The Quad Enable (QE) bit in Status Register-2 must be set to 1 before the device will accept the Fast Read Quad Output Instruction. The Fast Read Quad Output Instruction allows data to be transferred at four times the rate of standard SPI devices.

The Fast Read Quad Output instruction can operate at the highest possible frequency of F_R (see AC Electrical Characteristics). This is accomplished by adding eight "dummy" clocks after the 24-bit address as shown in Figure 20. The dummy clocks allow the device's internal circuits additional time for setting up the initial address. The input data during the dummy clocks is "don't care". However, the IO pins should be high-impedance prior to the falling edge of the first data out clock.

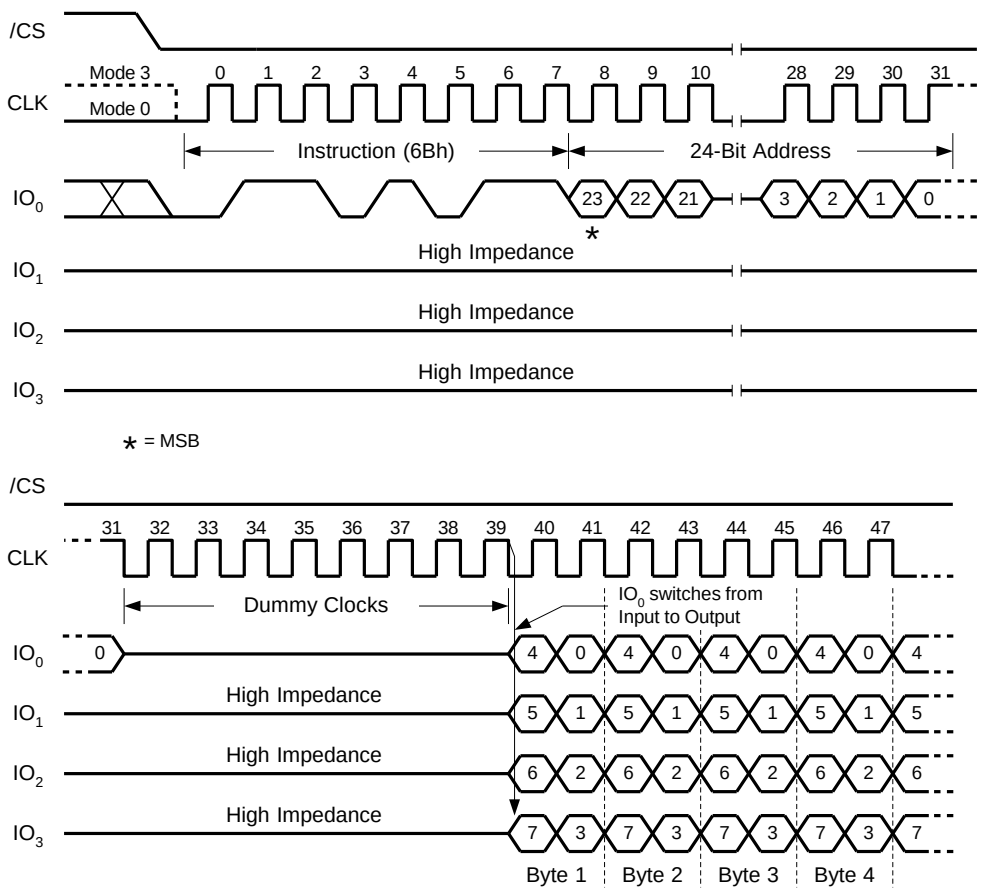

Figure 20. Fast Read Quad Output Instruction (SPI Mode only)

8.2.11 Fast Read Dual I/O (BBh)

The Fast Read Dual I/O (BBh) instruction allows for improved random access while maintaining two IO pins, IO_0 and IO_1. It is similar to the Fast Read Dual Output (3Bh) instruction but with the capability to input the Address bits (A23-0) two bits per clock. This reduced instruction overhead may allow for code execution (XIP) directly from the Dual SPI in some applications.

Fast Read Dual I/O with "Continuous Read Mode"

The Fast Read Dual I/O instruction can further reduce instruction overhead through setting the "Continuous Read Mode" bits (M7-0) after the input Address bits (A23-0), as shown in Figure 22a. The upper nibble of the (M7-4) controls the length of the next Fast Read Dual I/O instruction through the inclusion or exclusion of the first byte instruction code. The lower nibble bits of the (M3-0) are don't care ("x"). However, the IO pins should be high-impedance prior to the falling edge of the first data out clock.

If the "Continuous Read Mode" bits M5-4 = (1,0), then the next Fast Read Dual I/O instruction (after /CS is raised and then lowered) does not require the BBh instruction code, as shown in Figure 22b. This reduces the instruction sequence by eight clocks and allows the Read address to be immediately entered after /CS is asserted low. If the "Continuous Read Mode" bits M5-4 do not equal to (1,0), the next instruction (after /CS is raised and then lowered) requires the first byte instruction code, thus returning to normal operation. It is recommended to input FFFFh on IO0 for the next instruction (16 clocks), to ensure M4 = 1 and return the device to normal operation.

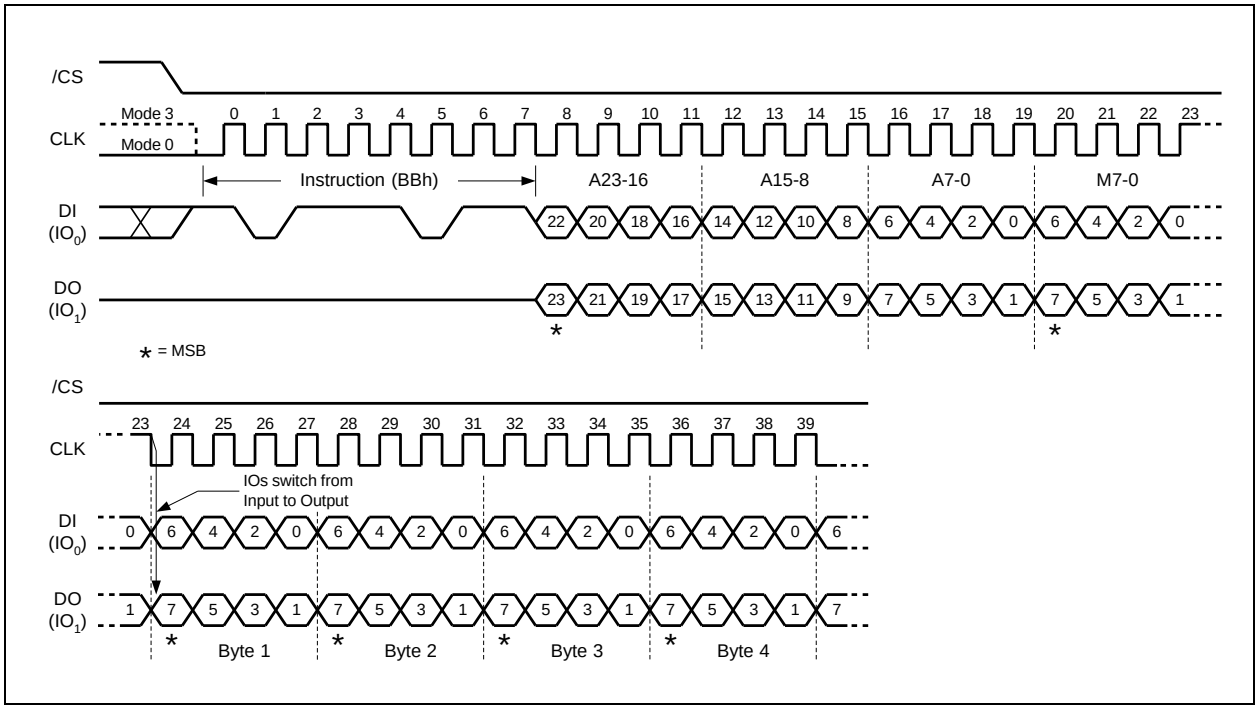

Figure 22a. Fast Read Dual I/O Instruction (Initial instruction or previous M5-4 ≠ 10, SPI Mode only)

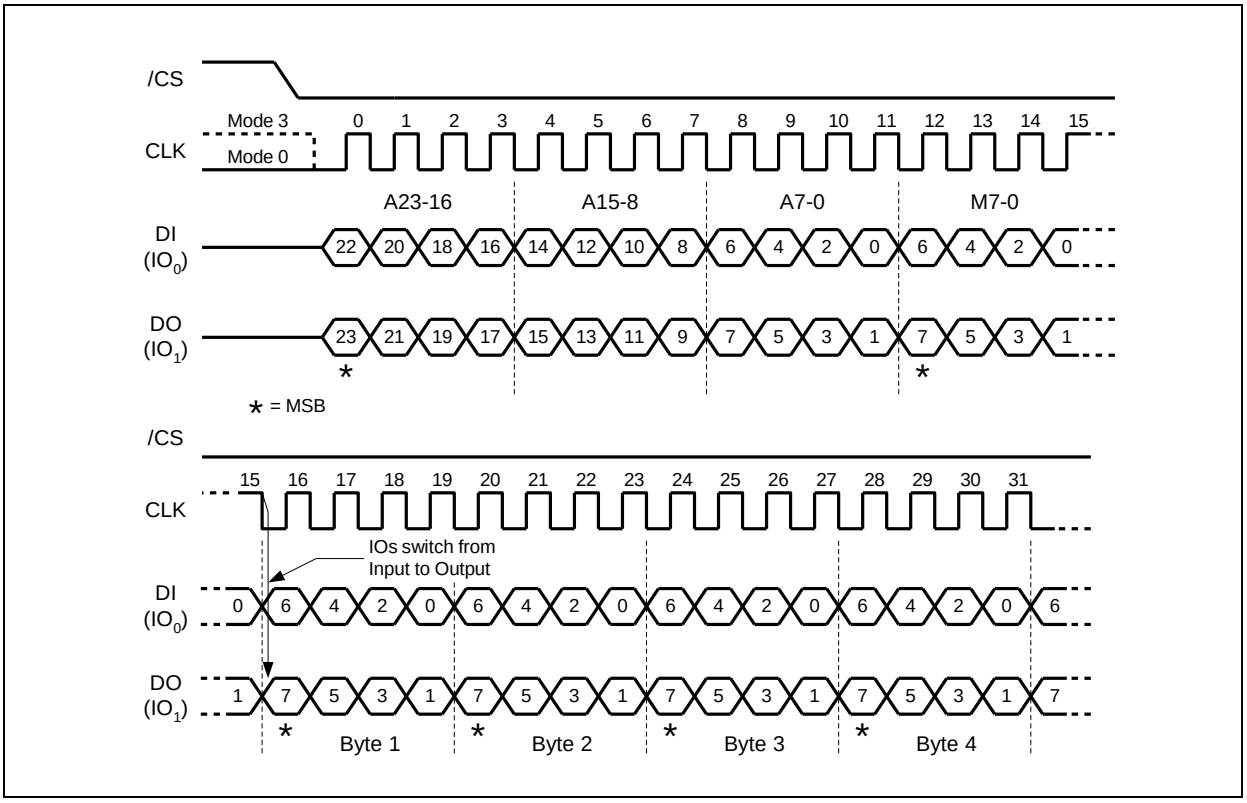

Figure 22b. Fast Read Dual I/O Instruction (Previous instruction set M5-4 = 10, SPI Mode only)

8.2.12 DTR Fast Read Dual I/O (BDh)

The DTR Fast Read Dual I/O (BDh) instruction allows for improved random access while maintaining two IO pins, IO_0 and IO_1. It is similar to the Fast Read Dual Output (3Bh) instruction but with the capability to input the Address bits (A23-0) two bits per clock. This reduced instruction overhead may allow for code execution (XIP) directly from the Dual SPI in some applications.

DTR Fast Read Dual I/O with "Continuous Read Mode"

The DTR Fast Read Dual I/O instruction can further reduce instruction overhead through setting the "Continuous Read Mode" bits (M7-0) after the input Address bits (A23-0), as shown in Figure 23a. The upper nibble of the (M7-4) controls the length of the next Fast Read Dual I/O instruction through the inclusion or exclusion of the first byte instruction code. The lower nibble bits of the (M3-0) are don't care ("x"). However, the IO pins should be high-impedance prior to the falling edge of the first data out clock.

If the "Continuous Read Mode" bits M5-4 = (1,0), then the next Fast Read Dual I/O instruction (after /CS is raised and then lowered) does not require the BBh instruction code, as shown in Figure 23b. This reduces the instruction sequence by eight clocks and allows the Read address to be immediately entered after /CS is asserted low. If the "Continuous Read Mode" bits M5-4 do not equal to (1,0), the next instruction (after /CS is raised and then lowered) requires the first byte instruction code, thus returning to normal operation. It is recommended to input FFFFh/FFFFFh on IO0 for the next instruction (16/20 clocks), to ensure M4 = 1 and return the device to normal operation.

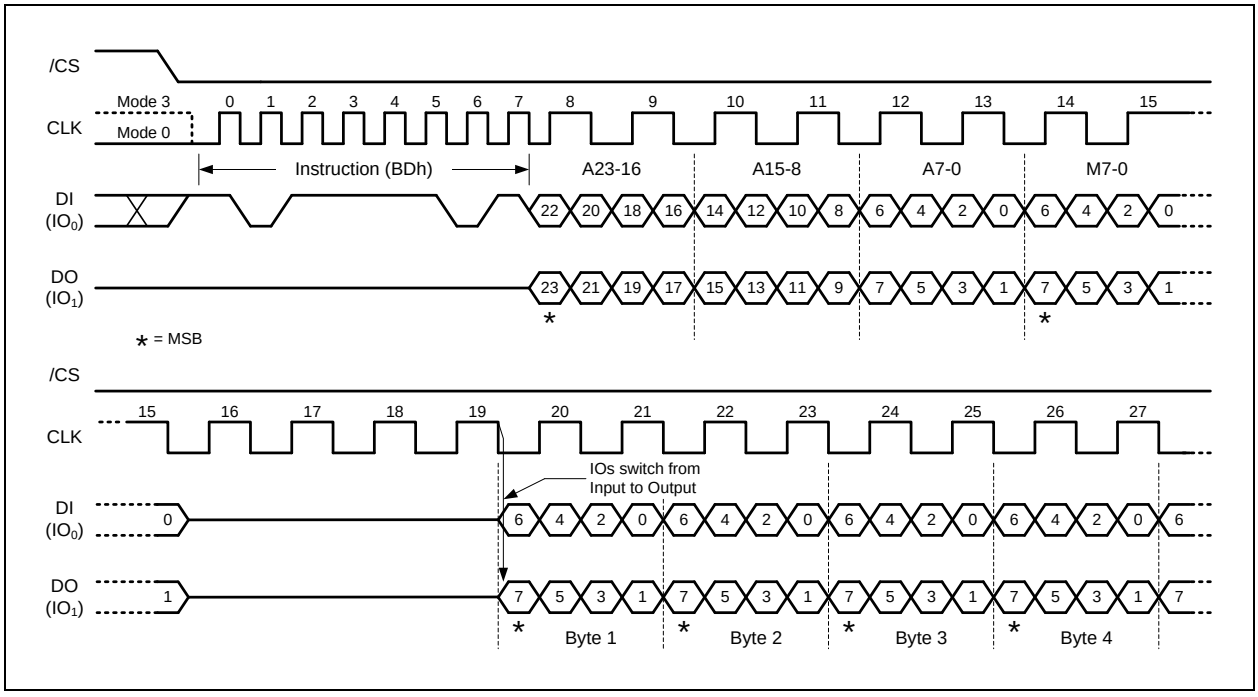

Figure 23a. DTR Fast Read Dual I/O (Initial instruction or previous M5-4≠10, SPI Mode only)

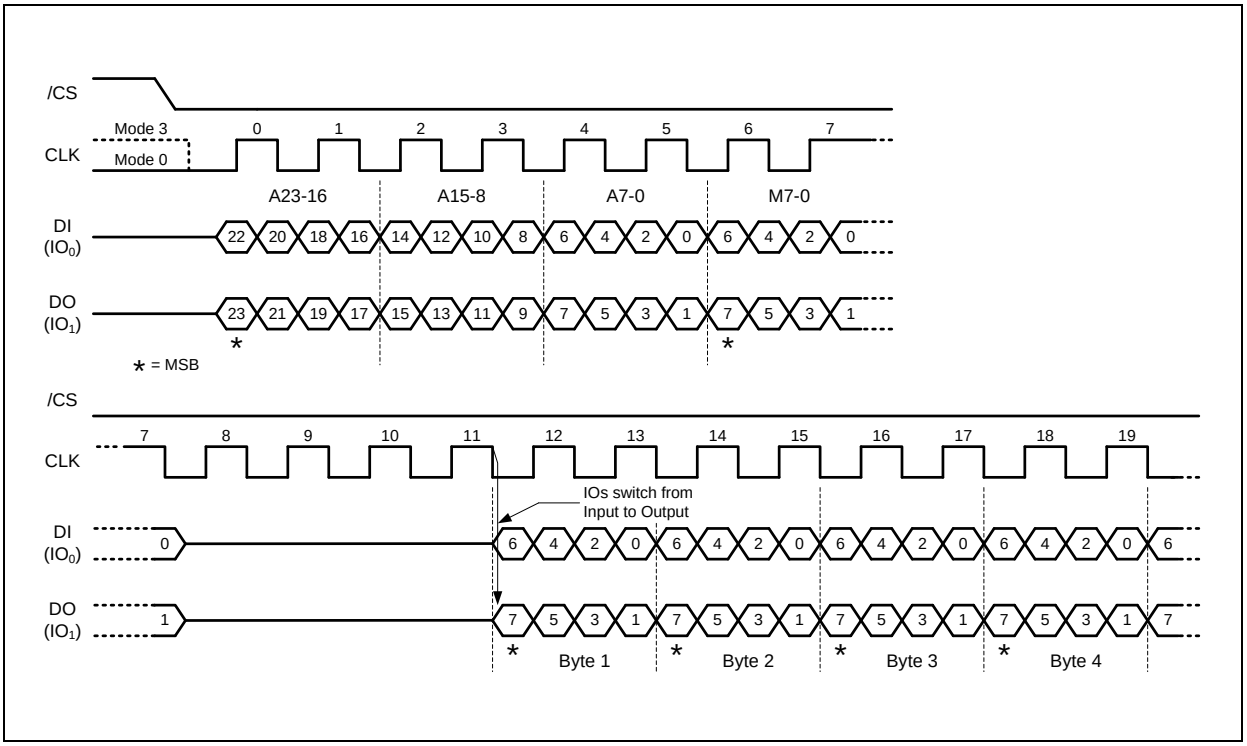

Figure 23b. DTR Fast Read Dual I/O (Previous instruction set M5-4=10, SPI Mode only)

8.2.13 Fast Read Quad I/O (EBh)

The Fast Read Quad I/O (EBh) instruction is similar to the Fast Read Dual I/O (BBh) instruction except that address and data bits are input and output through four pins IO_0, IO_1, IO_2 and IO_3 and four Dummy clocks are required in SPI mode prior to the data output. The Quad I/O dramatically reduces instruction overhead allowing faster random access for code execution (XIP) directly from the Quad SPI. The Quad Enable bit (QE) of Status Register-2 must be set to enable the Fast Read Quad I/O Instruction.

Fast Read Quad I/O with "Continuous Read Mode"

The Fast Read Quad I/O instruction can further reduce instruction overhead through setting the "Continuous Read Mode" bits (M7-0) after the input Address bits (A23-0), as shown in Figure 24a. The upper nibble of the (M7-4) controls the length of the next Fast Read Quad I/O instruction through the inclusion or exclusion of the first byte instruction code. The lower nibble bits of the (M3-0) are don't care ("x"). However, the IO pins should be high-impedance prior to the falling edge of the first data out clock.

If the "Continuous Read Mode" bits M5-4 = (1,0), then the next Fast Read Quad I/O instruction (after /CS is raised and then lowered) does not require the EBh instruction code, as shown in Figure 24b. This reduces the instruction sequence by eight clocks and allows the Read address to be immediately entered after /CS is asserted low. If the "Continuous Read Mode" bits M5-4 do not equal to (1,0), the next instruction (after /CS is raised and then lowered) requires the first byte instruction code, thus returning to normal operation. It is recommended to input FFh on IO0 for the next instruction (8 clocks), to ensure M4 = 1 and return the device to normal operation.

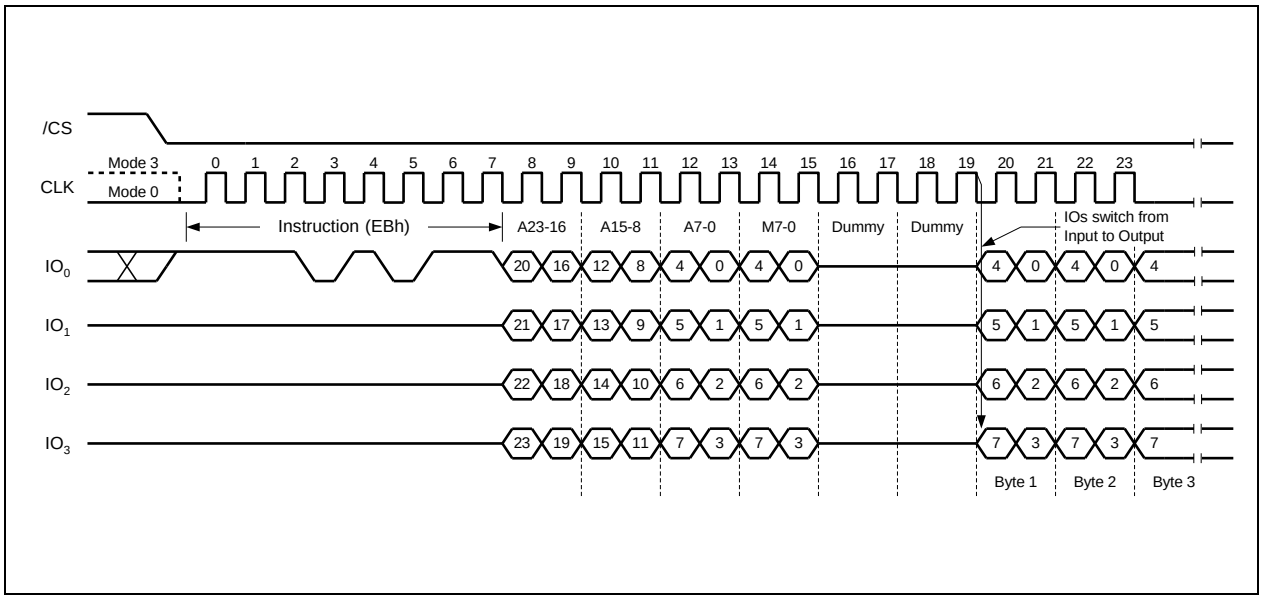

Figure 24a. Fast Read Quad I/O Instruction (Initial instruction or previous M5-4≠10, SPI Mode)

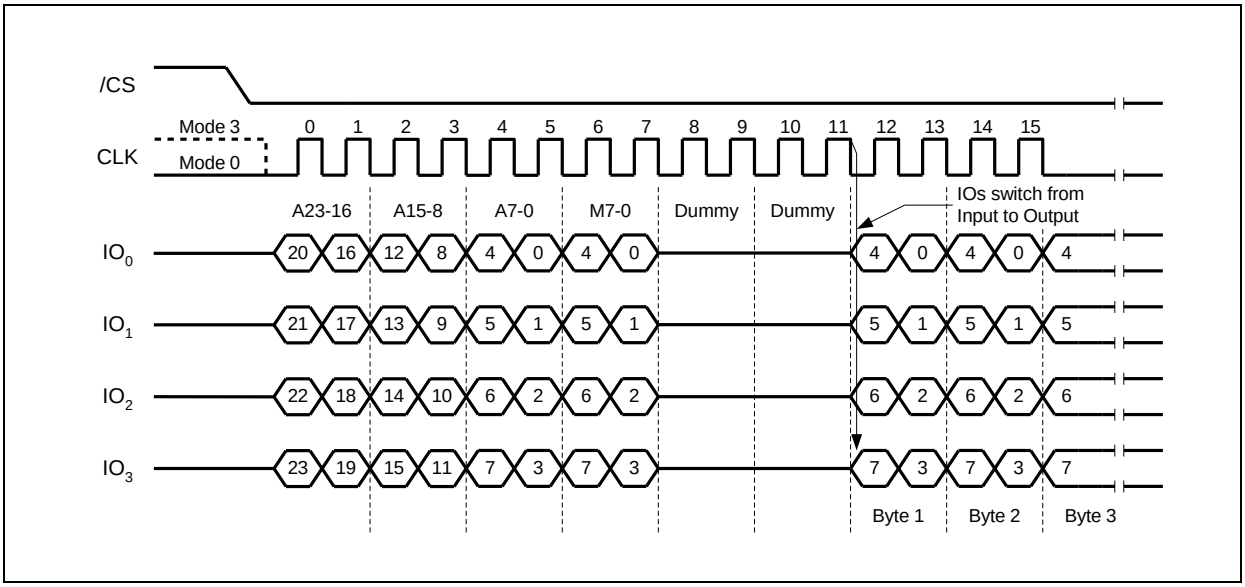

Figure 24b. Fast Read Quad I/O Instruction (Previous instruction set M5-4 = 10, SPI Mode)

Fast Read Quad I/O with "8/16/32/64-Byte Wrap Around" in Standard SPI mode

The Fast Read Quad I/O instruction can also be used to access a specific portion within a page by issuing a "Set Burst with Wrap" (77h) command prior to EBh. The "Set Burst with Wrap" (77h) command can either enable or disable the "Wrap Around" feature for the following EBh commands. When "Wrap Around" is enabled, the data being accessed can be limited to either an 8, 16, 32 or 64-byte section of a 256-byte page. The output data starts at the initial address specified in the instruction, once it reaches the ending boundary of the 8/16/32/64-byte section, the output will wrap around to the beginning boundary automatically until /CS is pulled high to terminate the command.

The Burst with Wrap feature allows applications that use cache to quickly fetch a critical address and then fill the cache afterwards within a fixed length (8/16/32/64-byte) of data without issuing multiple read commands.

The "Set Burst with Wrap" instruction allows three "Wrap Bits", W6-4 to be set. The W4 bit is used to enable or disable the "Wrap Around" operation while W6-5 are used to specify the length of the wrap around section within a page. Refer to section 8.2.37 for detail descriptions.

8.2.14 DTR Fast Read Quad I/O (EDh)

The DTR Fast Read Quad I/O (EDh) instruction is similar to the Fast Read Dual I/O (BBh) instruction except that address and data bits are input and output through four pins IO_0, IO_1, IO_2 and IO_3 and four Dummy clocks are required in SPI mode prior to the data output. The Quad I/O dramatically reduces instruction overhead allowing faster random access for code execution (XIP) directly from the Quad SPI. The Quad Enable bit (QE) of Status Register-2 must be set to enable the Fast Read Quad I/O Instruction.

DTR Fast Read Quad I/O with "Continuous Read Mode"

The Fast Read Quad I/O instruction can further reduce instruction overhead through setting the "Continuous Read Mode" bits (M7-0) after the input Address bits (A23/A31-0), as shown in Figure 27a. The upper nibble of the (M7-4) controls the length of the next Fast Read Quad I/O instruction through the inclusion or exclusion of the first byte instruction code. The lower nibble bits of the (M3-0) are don't care ("x"). However, the IO pins should be high-impedance prior to the falling edge of the first data out clock.

If the "Continuous Read Mode" bits M5-4 = (1,0), then the next Fast Read Quad I/O instruction (after /CS is raised and then lowered) does not require the EBh instruction code, as shown in Figure 27b. This reduces the instruction sequence by eight clocks and allows the Read address to be immediately entered after /CS is asserted low. If the "Continuous Read Mode" bits M5-4 do not equal to (1,0), the next instruction (after /CS is raised and then lowered) requires the first byte instruction code, thus returning to normal operation. It is recommended to input FFh/3FFh on IO0 for the next instruction (8/10 clocks), to ensure M4 = 1 and return the device to normal operation.

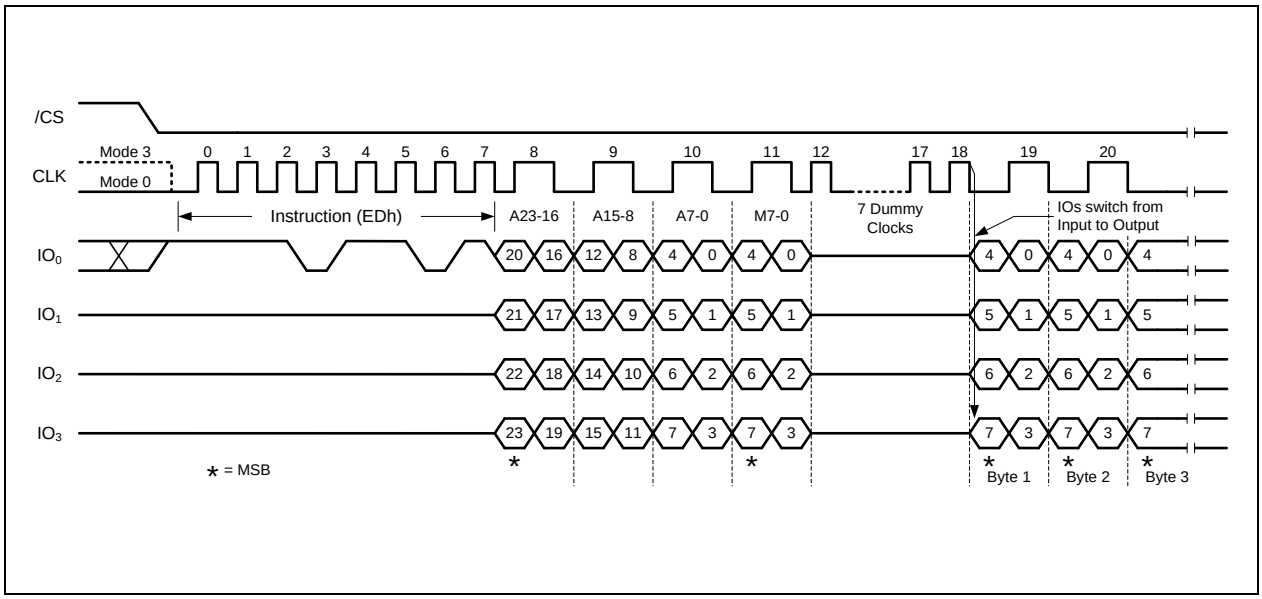

Figure 27a. DTR Fast Read Quad I/O (Initial instruction or previous M5-4≠10, SPI Mode)

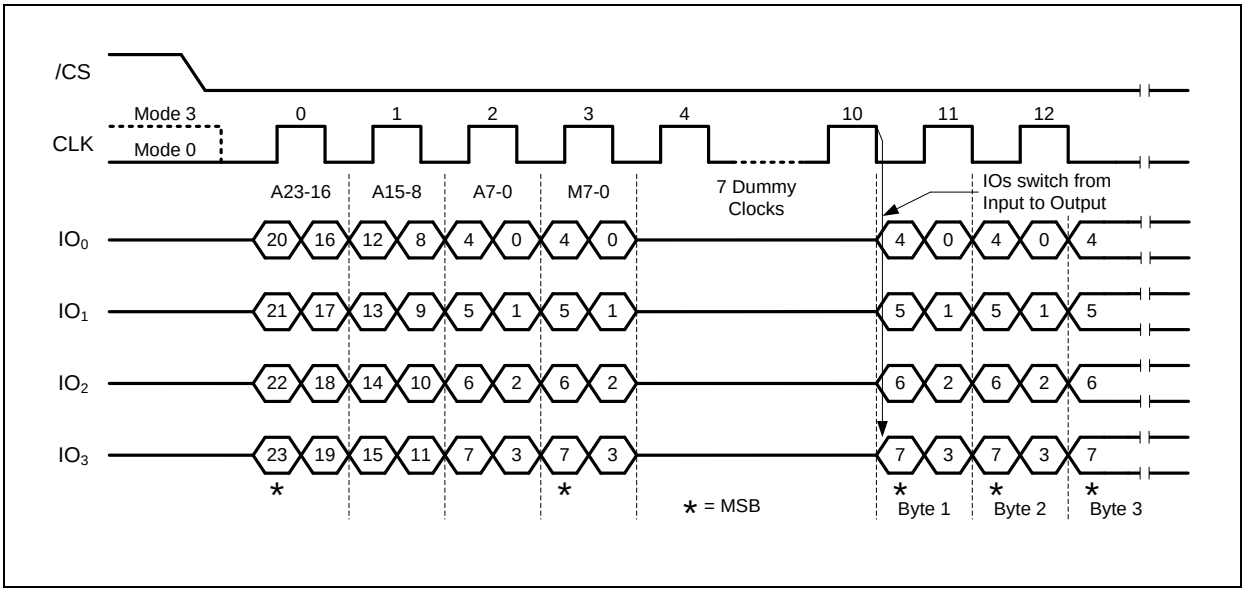

Figure 27b. Fast Read Quad I/O (Previous instruction set M5-4=10, SPI Mode)

DTR Fast Read Quad I/O with "8/16/32/64-Byte Wrap Around" in Standard SPI mode

The Fast Read Quad I/O instruction can also be used to access a specific portion within a page by issuing a "Set Burst with Wrap" (77h) command prior to EDh. The "Set Burst with Wrap" (77h) command can either enable or disable the "Wrap Around" feature for the following EDh commands. When "Wrap Around" is enabled, the data being accessed can be limited to either an 8, 16, 32 or 64-byte section of a 256-byte page. The output data starts at the initial address specified in the instruction, once it reaches the ending boundary of the 8/16/32/64-byte section, the output will wrap around to the beginning boundary automatically until /CS is pulled high to terminate the command.

The Burst with Wrap feature allows applications that use cache to quickly fetch a critical address and then fill the cache afterwards within a fixed length (8/16/32/64-byte) of data without issuing multiple read commands.

The "Set Burst with Wrap" instruction allows three "Wrap Bits", W6-4 to be set. The W4 bit is used to enable or disable the "Wrap Around" operation while W6-5 are used to specify the length of the wrap around section within a page. Refer to section 8.2.37 for detail descriptions.

DTR Fast Read Quad I/O (EDh) in QPI Mode

The DTR Fast Read Quad I/O instruction is also supported in QPI mode, as shown in Figure 19c. In QPI mode, the “Continuous Read Mode” bits M7-0 are also considered as dummy clocks. In the default setting, the data output will follow the Continuous Read Mode bits immediately.

“Continuous Read Mode” feature is also available in QPI mode for Fast Read Quad I/O instruction. Please refer to the description on previous pages.

“Wrap Around” feature is not available in QPI mode for Fast Read Quad I/O instruction. To perform a read operation with fixed data length wrap around in QPI mode, a dedicated “Burst Read with Wrap” (0Ch) instruction must be used. Please refer to 8.3.37 for details.

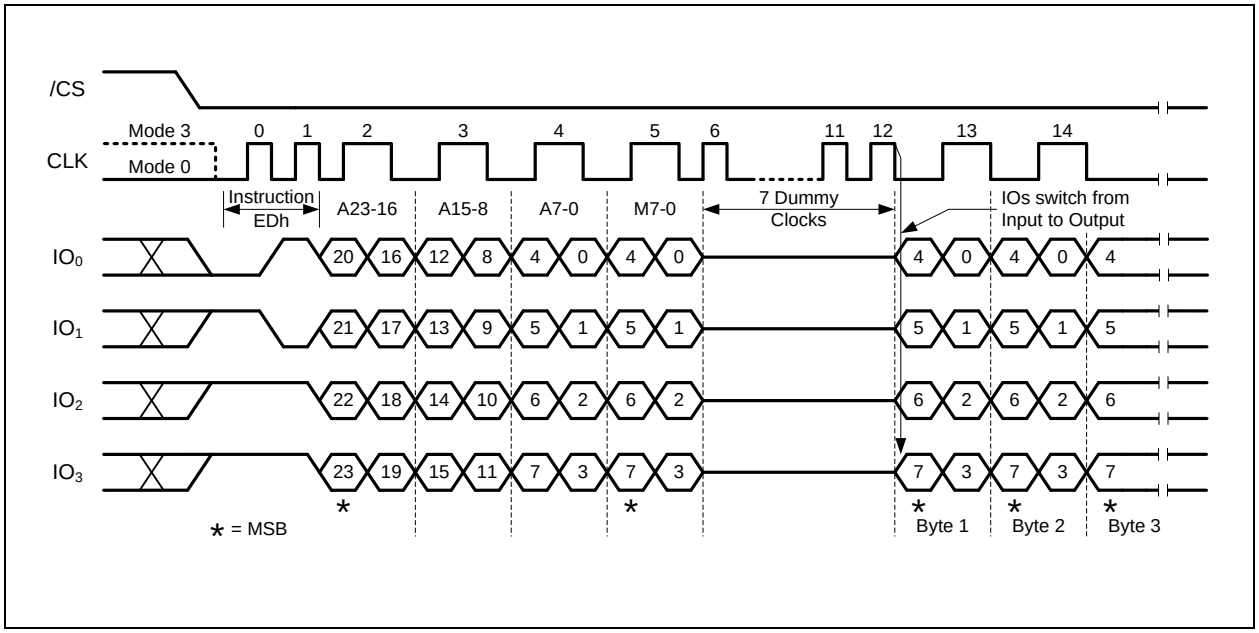

Figure 27c. DTR Fast Read Quad I/O (Initial instruction or previous M5-4≠10, QPI Mode)

Fast Read Quad I/O (EBh) in QPI Mode

The Fast Read Quad I/O instruction is also supported in QPI mode, as shown in Figure 24c. When QPI mode is enabled, the number of dummy clocks is configured by the “Set Read Parameters (C0h)” instruction to accommodate a wide range of applications with different needs for either maximum Fast Read frequency or minimum data access latency. Depending on the Read Parameter Bits P[5:4] setting, the number of dummy clocks can be configured as either 2, 4, 6 or 8. The default number of dummy clocks upon power up or after a Reset instruction is 2. In QPI mode, the “Continuous Read Mode” bits M7-0 are also considered as dummy clocks. In the default setting, the data output will follow the Continuous Read Mode bits immediately.

“Continuous Read Mode” feature is also available in QPI mode for Fast Read Quad I/O instruction. Please refer to the description on previous pages.

“Wrap Around” feature is not available in QPI mode for Fast Read Quad I/O instruction. To perform a read operation with fixed data length wrap around in QPI mode, a dedicated “Burst Read with Wrap” (0Ch) instruction must be used. Please refer to 8.2.37 for details.

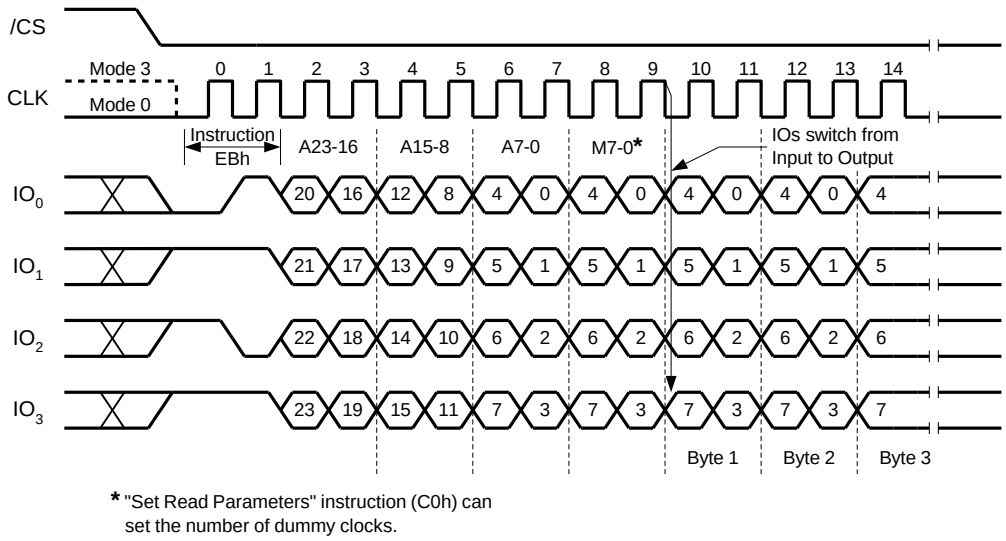

Figure 24c. Fast Read Quad I/O Instruction (Initial instruction or previous M5-4≠10, QPI Mode)

8.2.15 Set Burst with Wrap (77h)

In Standard SPI mode, the Set Burst with Wrap (77h) instruction is used in conjunction with “Fast Read Quad I/O” instructions to access a fixed length of 8/16/32/64-byte section within a 256-byte page. Certain applications can benefit from this feature and improve the overall system code execution performance.

Similar to a Quad I/O instruction, the Set Burst with Wrap instruction is initiated by driving the /CS pin low and then shifting the instruction code “77h” followed by 24 dummy bits and 8 “Wrap Bits”, W7-0. The instruction sequence is shown in Figure 28. Wrap bit W7 and the lower nibble W3-0 are not used.

W6, W5	W4 = 0		W4 =1 (DEFAULT)	
	Wrap Around	Wrap Length	Wrap Around	Wrap Length
0 0	Yes	8-byte	No	N/A
0 1	Yes	16-byte	No	N/A
1 0	Yes	32-byte	No	N/A
1 1	Yes	64-byte	No	N/A

Once W6-4 is set by a Set Burst with Wrap instruction, all the following “Fast Read Quad I/O” instructions will use the W6-4 setting to access the 8/16/32/64-byte section within any page. To exit the “Wrap Around” function and return to normal read operation, another Set Burst with Wrap instruction should be issued to set W4 = 1. The default value of W4 upon power on or after a software/hardware reset is 1.

In QPI mode, the “Burst Read with Wrap (0Ch)” instruction should be used to perform the Read operation with “Wrap Around” feature. The Wrap Length set by W5-4 in Standard SPI mode is still valid in QPI mode and can also be re-configured by “Set Read Parameters (C0h)” instruction. Refer to 8.2.37 and 8.8.2.38 for details.

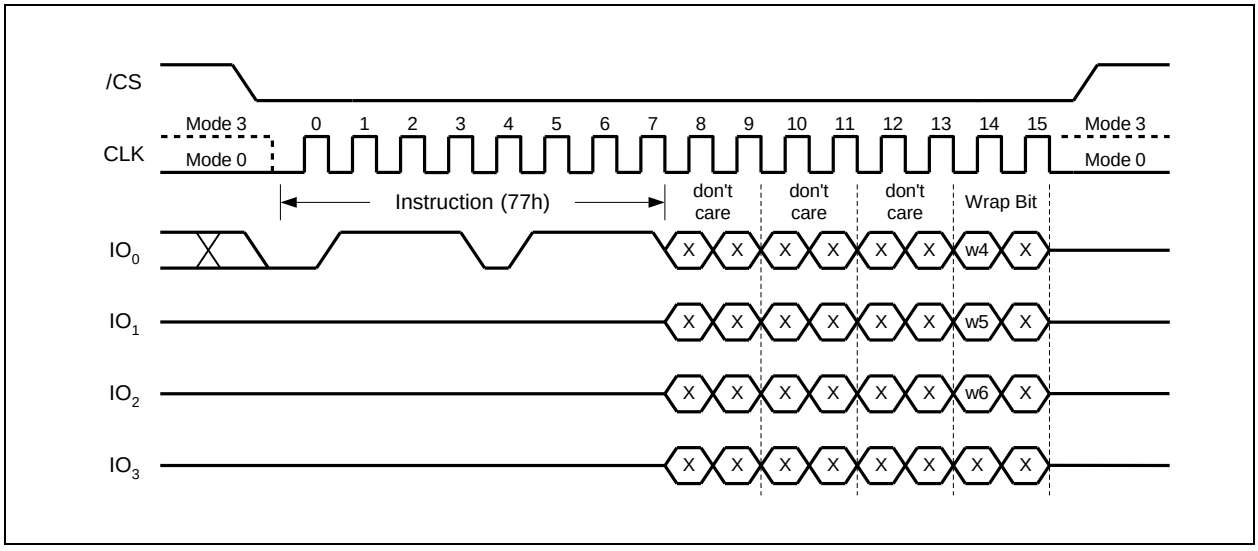

Figure 28. Set Burst with Wrap Instruction (SPI Mode only)

8.2.16 Page Program (02h)

The Page Program instruction allows from one byte to 256 bytes (a page) of data to be programmed at previously erased (FFh) memory locations. A Write Enable instruction must be executed before the device will accept the Page Program Instruction (Status Register bit WEL= 1). The instruction is initiated by driving the /CS pin low then shifting the instruction code “02h” followed by a 24-bit address (A23-A0) and at least one data byte, into the DI pin. The /CS pin must be held low for the entire length of the instruction while data is being sent to the device. The Page Program instruction sequence is shown in Figure 29.

If an entire 256 byte page is to be programmed, the last address byte (the 8 least significant address bits) should be set to 0. If the last address byte is not zero, and the number of clocks exceeds the remaining page length, the addressing will wrap to the beginning of the page. In some cases, less than 256 bytes (a partial page) can be programmed without having any effect on other bytes within the same page. One condition to perform a partial page program is that the number of clocks cannot exceed the remaining page length. If more than 256 bytes are sent to the device the addressing will wrap to the beginning of the page and overwrite previously sent data.

As with the write and erase instructions, the /CS pin must be driven high after the eighth bit of the last byte has been latched. If this is not done the Page Program instruction will not be executed. After /CS is driven high, the self-timed Page Program instruction will commence for a time duration of tpp (See AC Characteristics). While the Page Program cycle is in progress, the Read Status Register instruction may still be accessed for checking the status of the BUSY bit. The BUSY bit is a 1 during the Page Program cycle and becomes a 0 when the cycle is finished and the device is ready to accept other instructions again. After the Page Program cycle has finished the Write Enable Latch (WEL) bit in the Status Register is cleared to 0. The Page Program instruction will not be executed if the addressed page is protected by the Block Protect (CMP, SEC, TB, BP2, BP1, and BP0) bits or the Individual Block/Sector Locks.

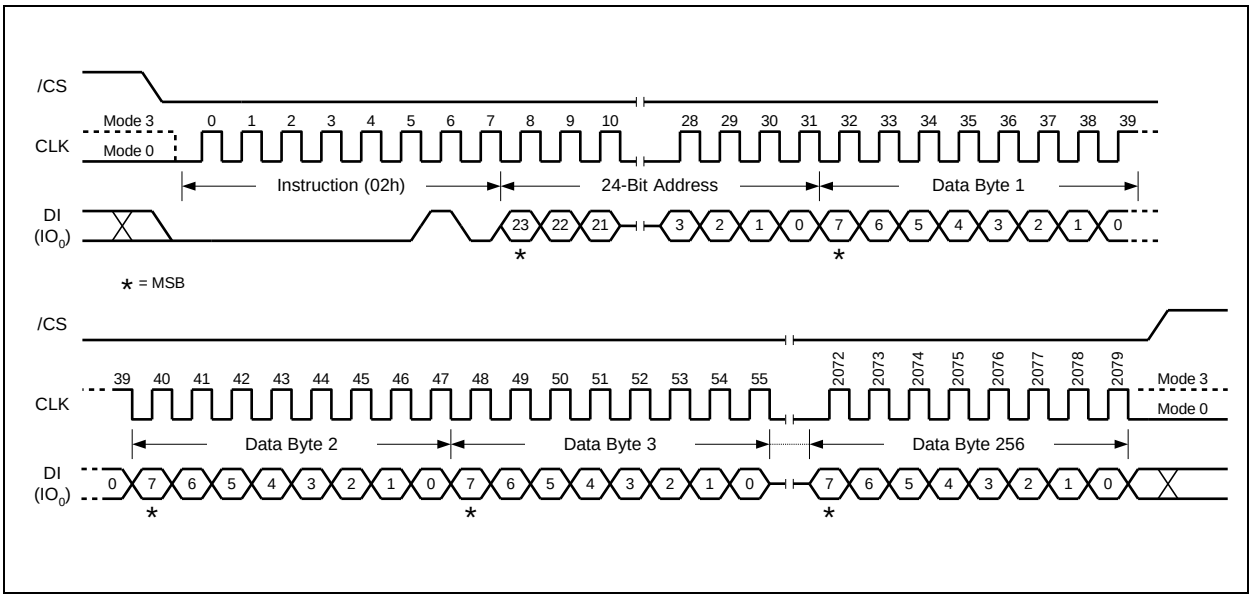

Figure 29a. Page Program Instruction (SPI Mode)

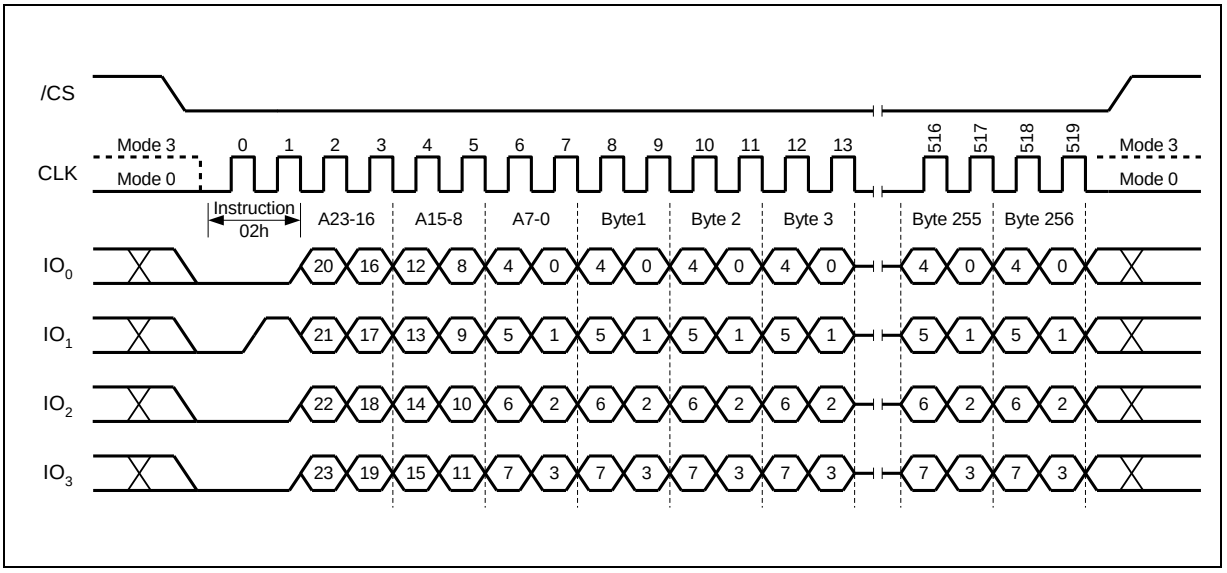

Figure 29b. Page Program Instruction (QPI Mode)

8.2.17 Quad Input Page Program (32h)

The Quad Page Program instruction allows up to 256 bytes of data to be programmed at previously erased (FFh) memory locations using four pins: IO_0, IO_1, IO_2, and IO_3. The Quad Page Program can improve performance for PROM Programmer and applications that have slow clock speeds <5MHz. Systems with faster clock speed will not realize much benefit for the Quad Page Program instruction since the inherent page program time is much greater than the time it take to clock-in the data.

To use Quad Page Program the Quad Enable (QE) bit in Status Register-2 must be set to 1. A Write Enable instruction must be executed before the device will accept the Quad Page Program instruction (Status Register-1, WEL=1). The instruction is initiated by driving the /CS pin low then shifting the instruction code "32h" followed by a 24-bit address (A23-A0) and at least one data byte, into the IO pins. The /CS pin must be held low for the entire length of the instruction while data is being sent to the device. All other functions of Quad Page Program are identical to standard Page Program. The Quad Page Program instruction sequence is shown in Figure 30.

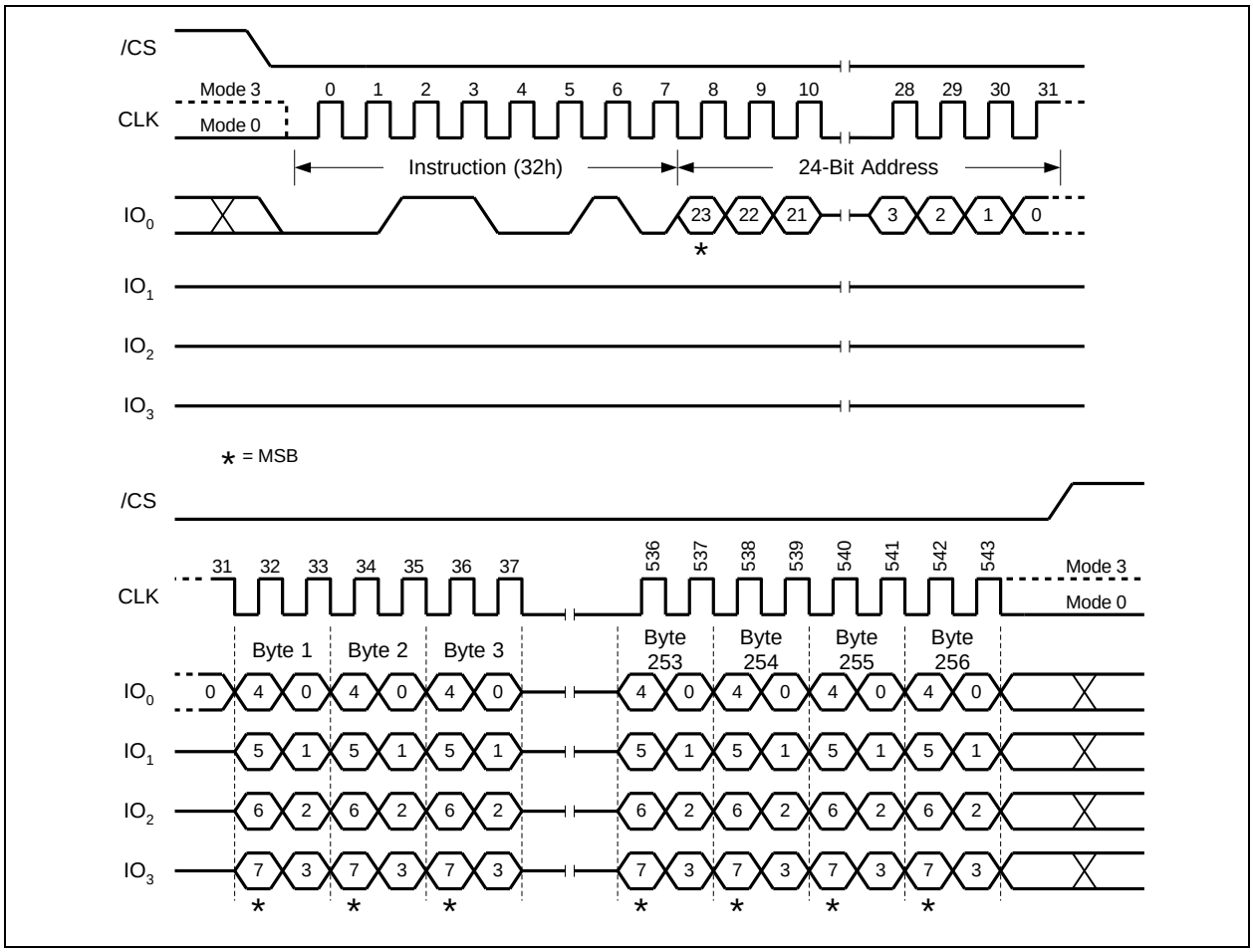

Figure 30. Quad Input Page Program Instruction (SPI Mode only)

8.2.18 Sector Erase (20h)

The Sector Erase instruction sets all memory within a specified sector (4K-bytes) to the erased state of all 1s (FFh). A Write Enable instruction must be executed before the device will accept the Sector Erase Instruction (Status Register bit WEL must equal 1). The instruction is initiated by driving the /CS pin low and shifting the instruction code "20h" followed a 24-bit sector address (A23-A0). The Sector Erase instruction sequence is shown in Figure 31a & 31b.

The /CS pin must be driven high after the eighth bit of the last byte has been latched. If this is not done the Sector Erase instruction will not be executed. After /CS is driven high, the self-timed Sector Erase instruction will commence for a time duration of t_{SE} (See AC Characteristics). While the Sector Erase cycle is in progress, the Read Status Register instruction may still be accessed for checking the status of the BUSY bit. The BUSY bit is a 1 during the Sector Erase cycle and becomes a 0 when the cycle is finished and the device is ready to accept other instructions again. After the Sector Erase cycle has finished the Write Enable Latch (WEL) bit in the Status Register is cleared to 0. The Sector Erase instruction will not be executed if the addressed page is protected by the Block Protect (CMP, SEC, TB, BP2, BP1, and BP0) bits or the Individual Block/Sector Locks.

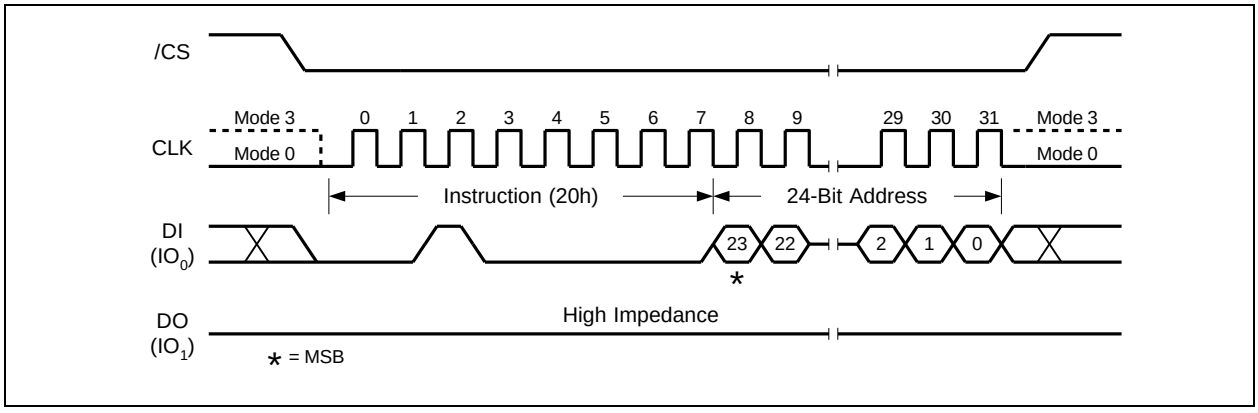

Figure 31a. Sector Erase Instruction (SPI Mode)

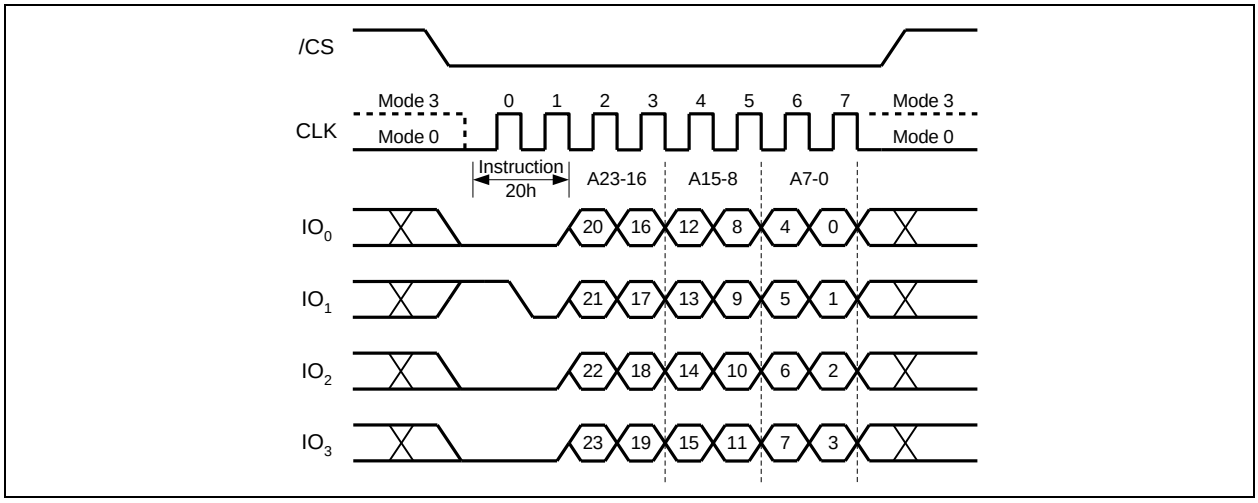

Figure 31b. Sector Erase Instruction (QPI Mode)

8.2.19 32KB Block Erase (52h)

The Block Erase instruction sets all memory within a specified block (32K-bytes) to the erased state of all 1s (FFh). A Write Enable instruction must be executed before the device will accept the Block Erase Instruction (Status Register bit WEL must equal 1). The instruction is initiated by driving the /CS pin low and shifting the instruction code "52h" followed a 24-bit block address (A23-A0). The Block Erase instruction sequence is shown in Figure 32a & 32b.

The /CS pin must be driven high after the eighth bit of the last byte has been latched. If this is not done the Block Erase instruction will not be executed. After /CS is driven high, the self-timed Block Erase instruction will commence for a time duration of t_{BE1} (See AC Characteristics). While the Block Erase cycle is in progress, the Read Status Register instruction may still be accessed for checking the status of the BUSY bit. The BUSY bit is a 1 during the Block Erase cycle and becomes a 0 when the cycle is finished and the device is ready to accept other instructions again. After the Block Erase cycle has finished the Write Enable Latch (WEL) bit in the Status Register is cleared to 0. The Block Erase instruction will not be executed if the addressed page is protected by the Block Protect (CMP, SEC, TB, BP2, BP1, and BP0) bits or the Individual Block/Sector Locks.

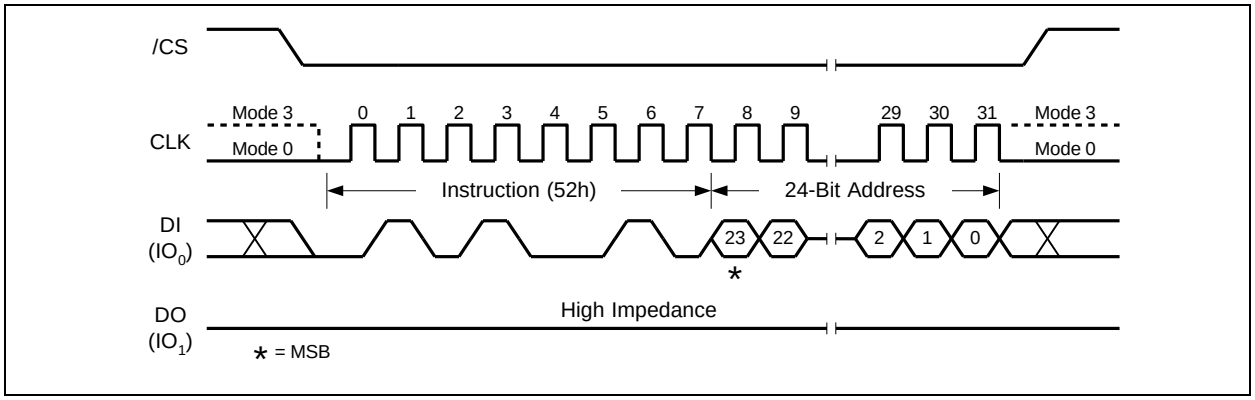

Figure 32a. 32KB Block Erase Instruction (SPI Mode)

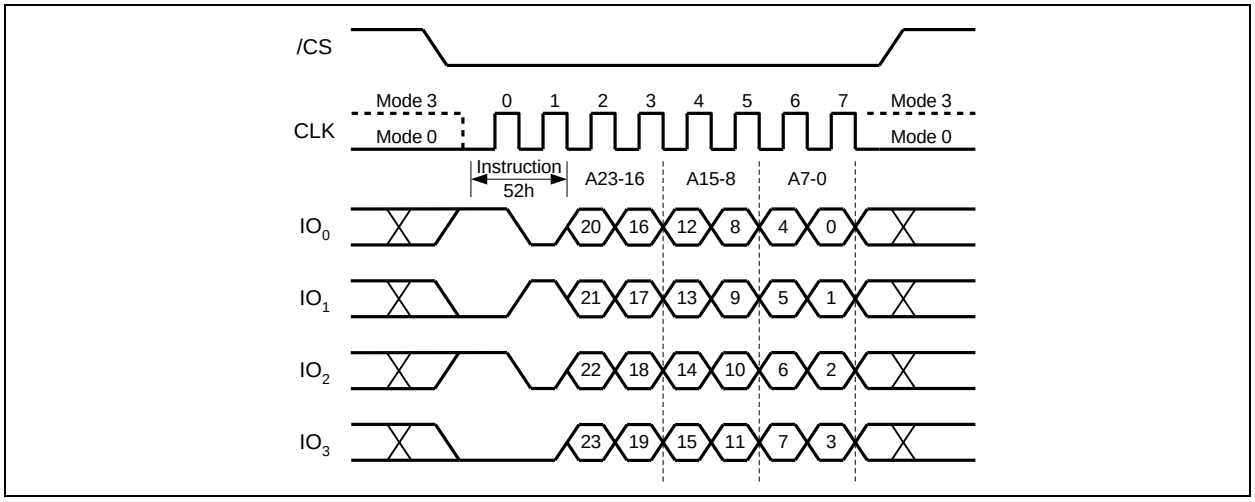

Figure 32b. 32KB Block Erase Instruction (QPI Mode)

8.2.20 64KB Block Erase (D8h)

The Block Erase instruction sets all memory within a specified block (64K-bytes) to the erased state of all 1s (FFh). A Write Enable instruction must be executed before the device will accept the Block Erase Instruction (Status Register bit WEL must equal 1). The instruction is initiated by driving the /CS pin low and shifting the instruction code "D8h" followed a 24-bit block address (A23-A0). The Block Erase instruction sequence is shown in Figure 33a & 33b.

The /CS pin must be driven high after the eighth bit of the last byte has been latched. If this is not done the Block Erase instruction will not be executed. After /CS is driven high, the self-timed Block Erase instruction will commence for a time duration of t_{BE} (See AC Characteristics). While the Block Erase cycle is in progress, the Read Status Register instruction may still be accessed for checking the status of the BUSY bit. The BUSY bit is a 1 during the Block Erase cycle and becomes a 0 when the cycle is finished and the device is ready to accept other instructions again. After the Block Erase cycle has finished the Write Enable Latch (WEL) bit in the Status Register is cleared to 0. The Block Erase instruction will not be executed if the addressed page is protected by the Block Protect (CMP, SEC, TB, BP2, BP1, and BP0) bits or the Individual Block/Sector Locks.

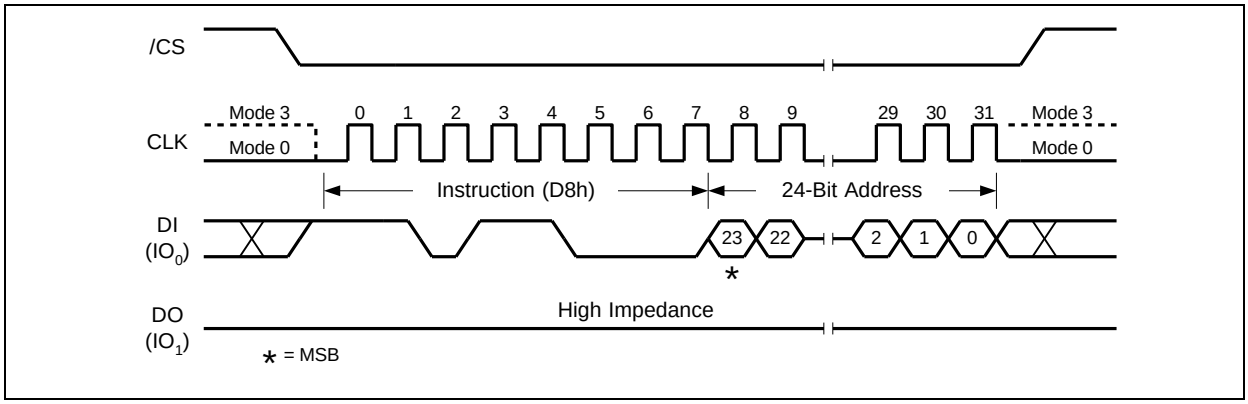

Figure 33a. 64KB Block Erase Instruction (SPI Mode)

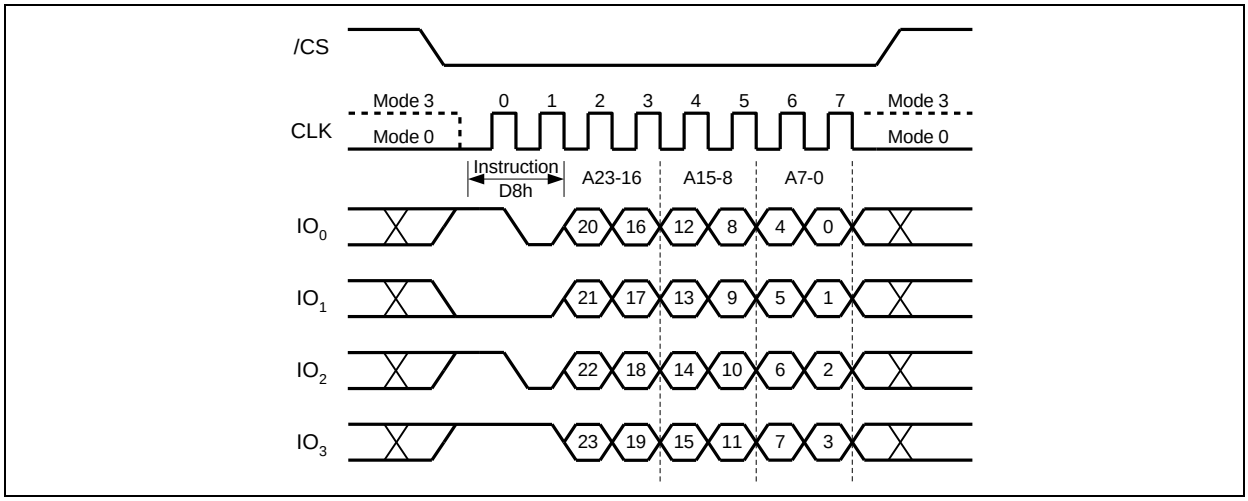

Figure 33b. 64KB Block Erase Instruction (QPI Mode)

8.2.21 Chip Erase (C7h / 60h)

The Chip Erase instruction sets all memory within the device to the erased state of all 1s (FFh). A Write Enable instruction must be executed before the device will accept the Chip Erase Instruction (Status Register bit WEL must equal 1). The instruction is initiated by driving the /CS pin low and shifting the instruction code “C7h” or “60h”. The Chip Erase instruction sequence is shown in Figure 34.

The /CS pin must be driven high after the eighth bit has been latched. If this is not done the Chip Erase instruction will not be executed. After /CS is driven high, the self-timed Chip Erase instruction will commence for a time duration of tCE (See AC Characteristics). While the Chip Erase cycle is in progress, the Read Status Register instruction may still be accessed to check the status of the BUSY bit. The BUSY bit is a 1 during the Chip Erase cycle and becomes a 0 when finished and the device is ready to accept other instructions again. After the Chip Erase cycle has finished the Write Enable Latch (WEL) bit in the Status Register is cleared to 0. The Chip Erase instruction will not be executed if any memory region is protected by the Block Protect (CMP, SEC, TB, BP2, BP1, and BP0) bits or the Individual Block/Sector Locks.

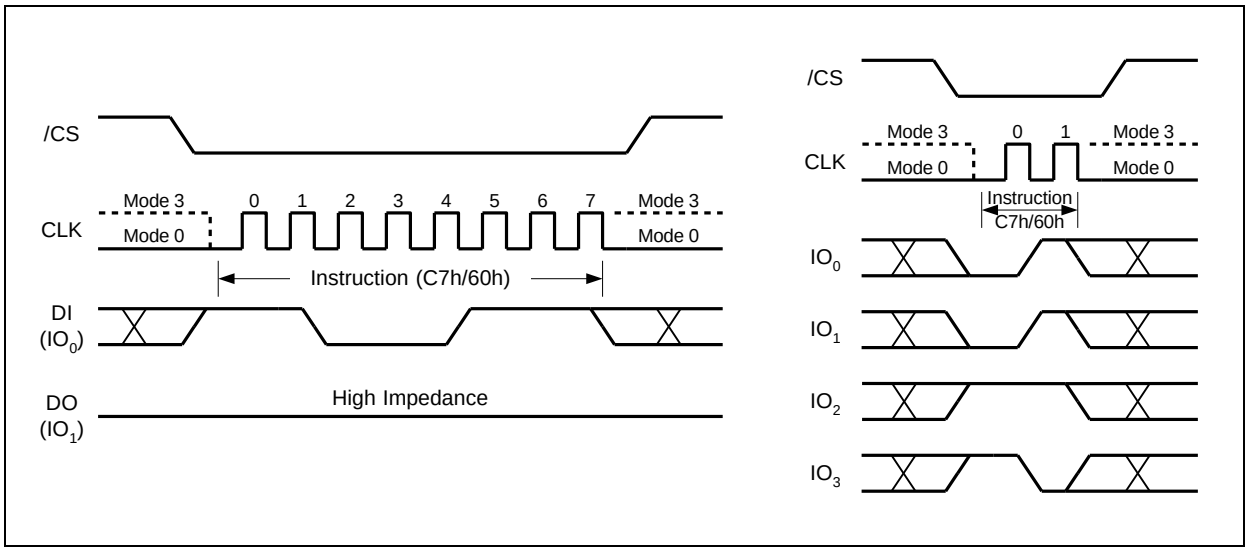

Figure 34. Chip Erase Instruction for SPI Mode (left) or QPI Mode (right)

8.2.22 Erase / Program Suspend (75h)

The Erase/Program Suspend instruction “75h”, allows the system to interrupt a Sector or Block Erase operation or a Page Program operation and then read from or program/erase data to, any other sectors or blocks. The Erase/Program Suspend instruction sequence is shown in Figure 35a & 35b.

The Write Status Register instruction (01h) and Erase instructions (20h, 52h, D8h, C7h, 60h, 44h) are not allowed during Erase Suspend. Erase Suspend is valid only during the Sector or Block erase operation. If written during the Chip Erase operation, the Erase Suspend instruction is ignored. The Write Status Register instruction (01h) and Program instructions (02h, 32h, 42h) are not allowed during Program Suspend. Program Suspend is valid only during the Page Program or Quad Page Program operation.

The Erase/Program Suspend instruction “75h” will be accepted by the device only if the SUS bit in the Status Register equals to 0 and the BUSY bit equals to 1 while a Sector or Block Erase or a Page Program operation is on-going. If the SUS bit equals to 1 or the BUSY bit equals to 0, the Suspend instruction will be ignored by the device. A maximum of time of “t_{SUS}” (See AC Characteristics) is required to suspend the erase or program operation. The BUSY bit in the Status Register will be cleared from 1 to 0 within “t_{SUS}” and the SUS bit in the Status Register will be set from 0 to 1 immediately after Erase/Program Suspend. For a previously resumed Erase/Program operation, it is also required that the Suspend instruction “75h” is not issued earlier than a minimum of time of “t_{SUS}” following the preceding Resume instruction “7Ah”.

Unexpected power off during the Erase/Program suspend state will reset the device and release the suspend state. SUS bit in the Status Register will also reset to 0. The data within the page, sector or block that was being suspended may become corrupted. It is recommended for the user to implement system design techniques against the accidental power interruption and preserve data integrity during erase/program suspend state.

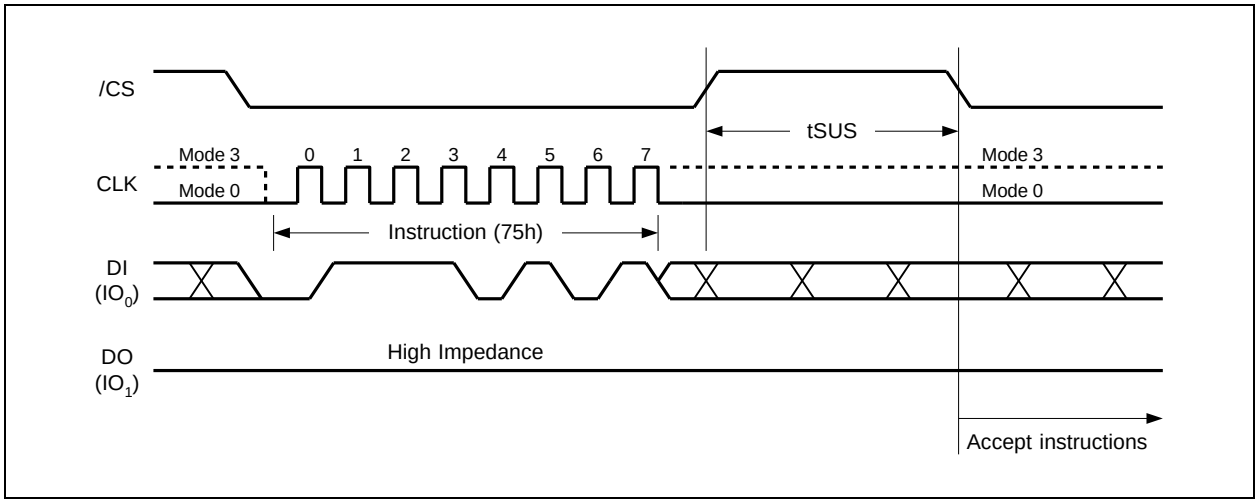

Figure 35a. Erase/Program Suspend Instruction (SPI Mode)

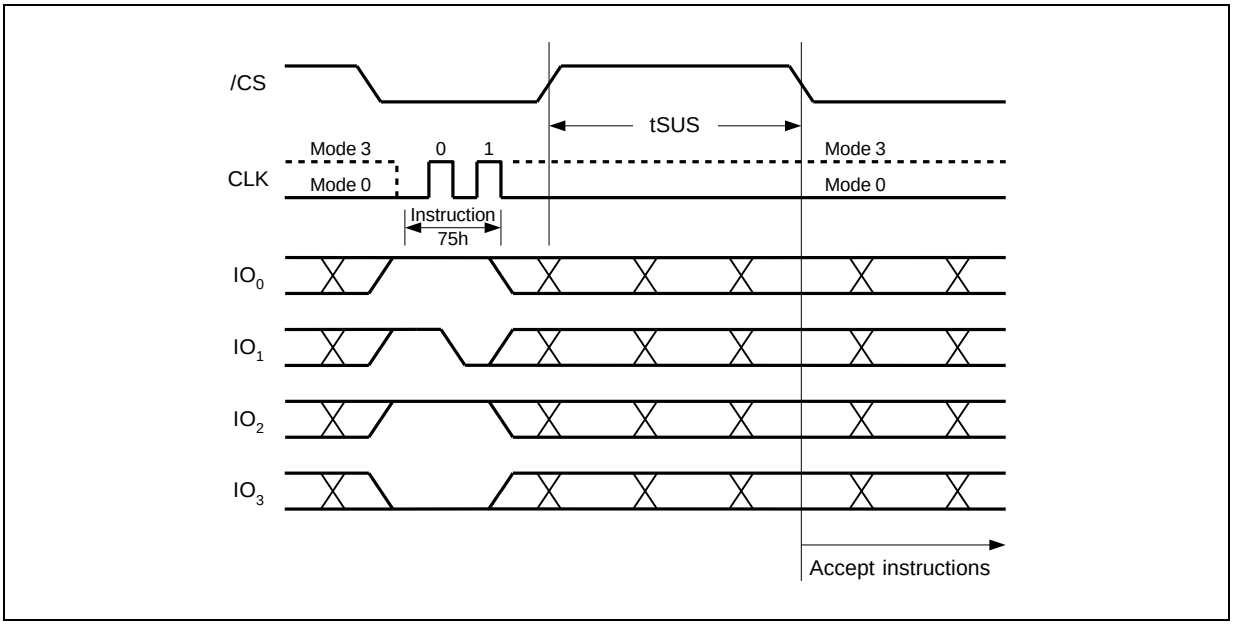

Figure 35b. Erase/Program Suspend Instruction (QPI Mode)

8.2.23 Erase / Program Resume (7Ah)

The Erase/Program Resume instruction "7Ah" must be written to resume the Sector or Block Erase operation or the Page Program operation after an Erase/Program Suspend. The Resume instruction "7Ah" will be accepted by the device only if the SUS bit in the Status Register equals to 1 and the BUSY bit equals to 0. After issued the SUS bit will be cleared from 1 to 0 immediately, the BUSY bit will be set from 0 to 1 within 200ns and the Sector or Block will complete the erase operation or the page will complete the program operation. If the SUS bit equals to 0 or the BUSY bit equals to 1, the Resume instruction "7Ah" will be ignored by the device. The Erase/Program Resume instruction sequence is shown in Figure 36a & 36b.

Resume instruction is ignored if the previous Erase/Program Suspend operation was interrupted by unexpected power off. It is also required that a subsequent Erase/Program Suspend instruction not to be issued within a minimum of time of "t_{SUS}" following a previous Resume instruction.

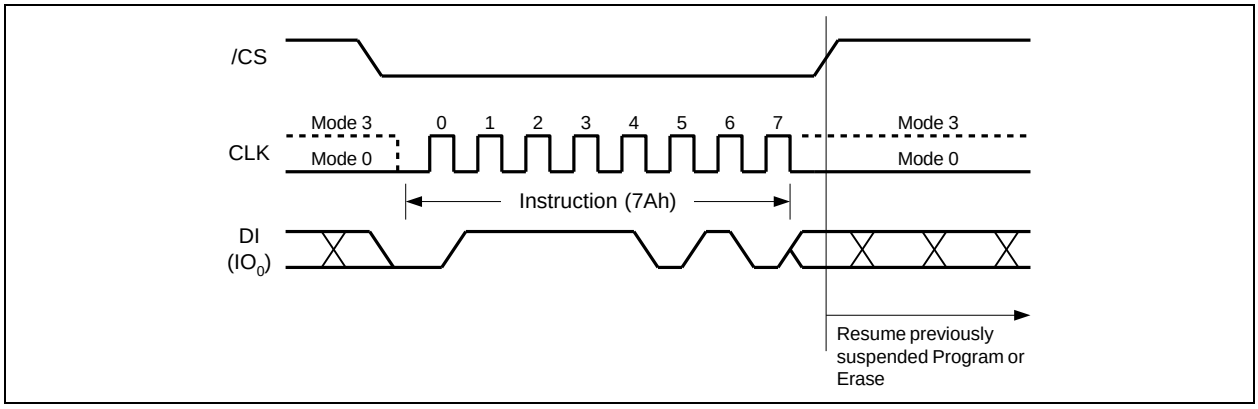

Figure 36a. Erase/Program Resume Instruction (SPI Mode)

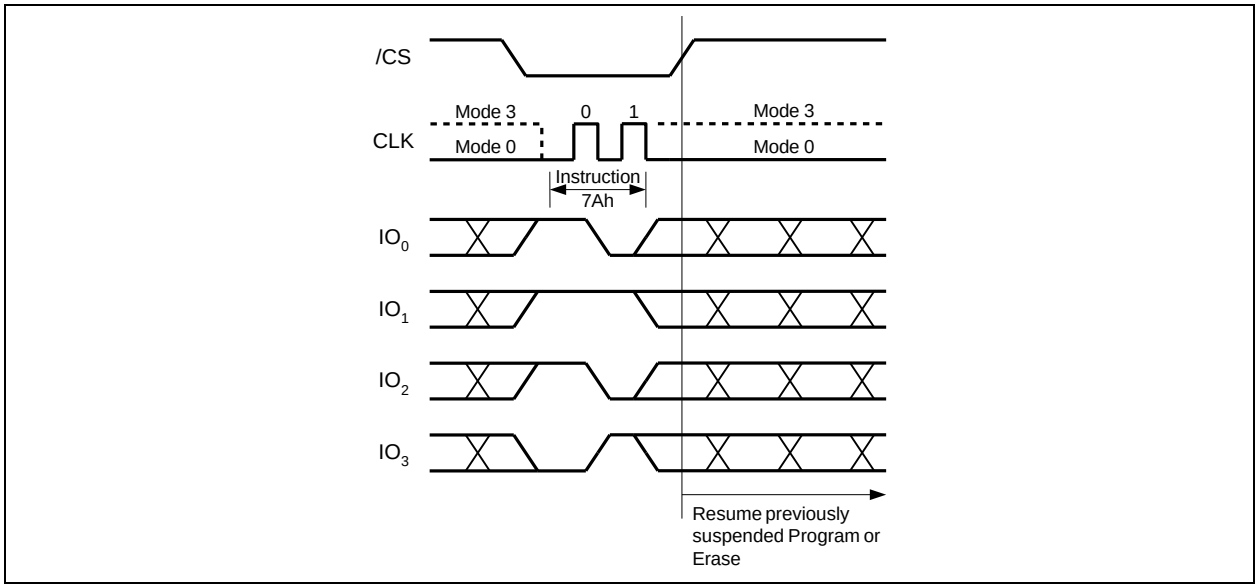

Figure 36b. Erase/Program Resume Instruction (QPI Mode)

8.2.24 Power-down (B9h)

Although the standby current during normal operation is relatively low, standby current can be further reduced with the Power-down instruction. The lower power consumption makes the Power-down instruction especially useful for battery powered applications (See ICC1 and ICC2 in AC Characteristics). The instruction is initiated by driving the /CS pin low and shifting the instruction code “B9h” as shown in Figure 37a & 37b.

The /CS pin must be driven high after the eighth bit has been latched. If this is not done the Power-down instruction will not be executed. After /CS is driven high, the power-down state will entered within the time duration of tDP (See AC Characteristics). While in the power-down state only the Release Power-down / Device ID (ABh) instruction, which restores the device to normal operation, will be recognized. All other instructions are ignored. This includes the Read Status Register instruction, which is always available during normal operation. Ignoring all but one instruction makes the Power Down state a useful condition for securing maximum write protection. The device always powers-up in the normal operation with the standby current of ICC1.

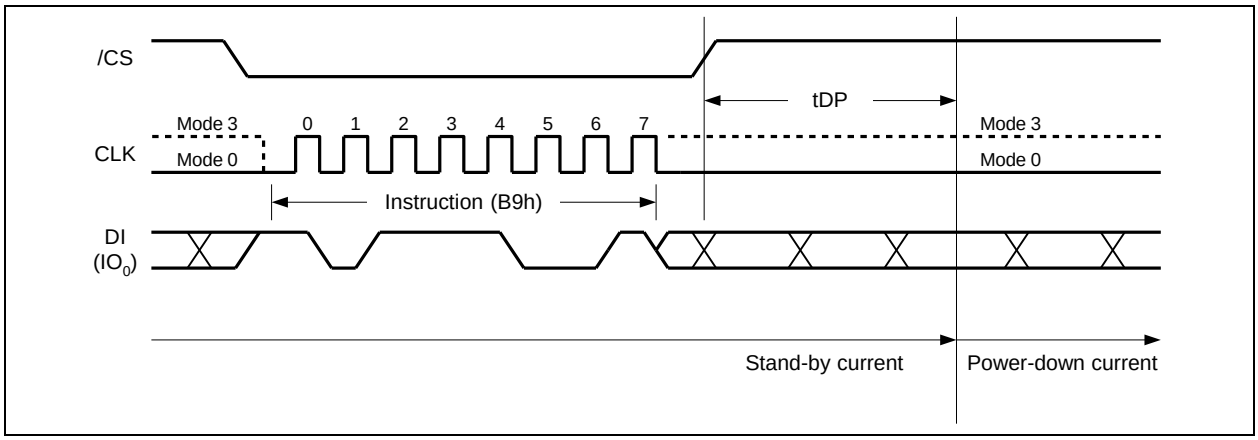

Figure 37a. Deep Power-down Instruction (SPI Mode)

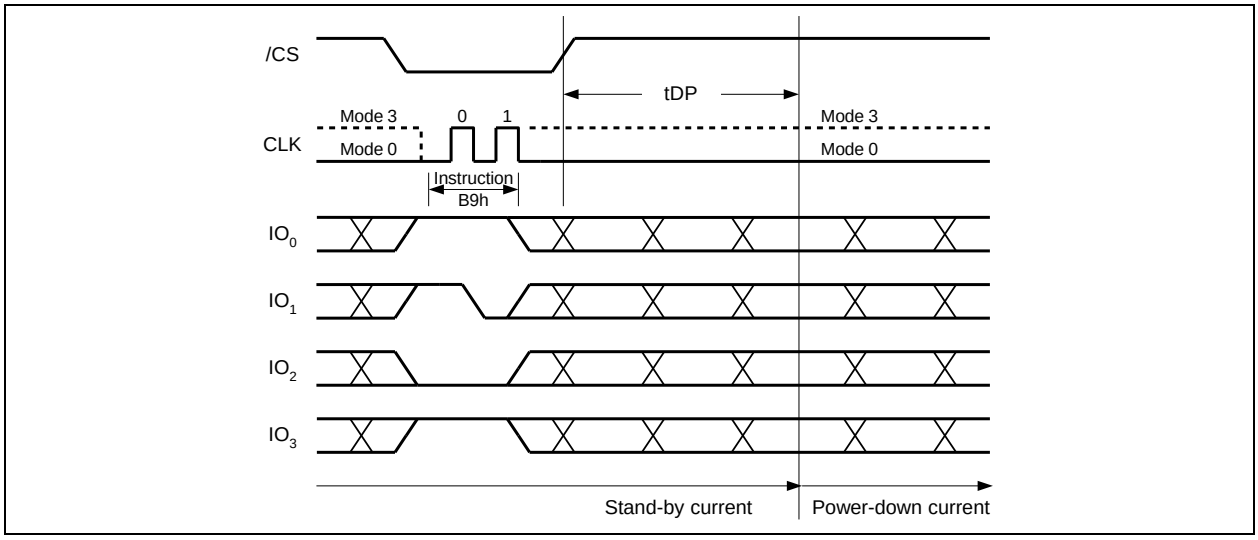

Figure 37b. Deep Power-down Instruction (QPI Mode)

8.2.25 Release Power-down / Device ID (ABh)

The Release from Power-down / Device ID instruction is a multi-purpose instruction. It can be used to release the device from the power-down state, or obtain the devices electronic identification (ID) number.

To release the device from the power-down state, the instruction is issued by driving the /CS pin low, shifting the instruction code “ABh” and driving /CS high as shown in Figure 38a & 38b. Release from power-down will take the time duration of t_{RES1} (See AC Characteristics) before the device will resume normal operation and other instructions are accepted. The /CS pin must remain high during the t_{RES1} time duration.

When used only to obtain the Device ID while not in the power-down state, the instruction is initiated by driving the /CS pin low and shifting the instruction code “ABh” followed by 3-dummy bytes. The Device ID bits are then shifted out on the falling edge of CLK with most significant bit (MSB) first. The Device ID value for the W25Q128JV is listed in Manufacturer and Device Identification table. The Device ID can be read continuously. The instruction is completed by driving /CS high.

When used to release the device from the power-down state and obtain the Device ID, the instruction is the same as previously described, and shown in Figure 38c & 38d, except that after /CS is driven high it must remain high for a time duration of t_{RES2} (See AC Characteristics). After this time duration the device will resume normal operation and other instructions will be accepted. If the Release from Power-down / Device ID instruction is issued while an Erase, Program or Write cycle is in process (when BUSY equals 1) the instruction is ignored and will not have any effects on the current cycle.

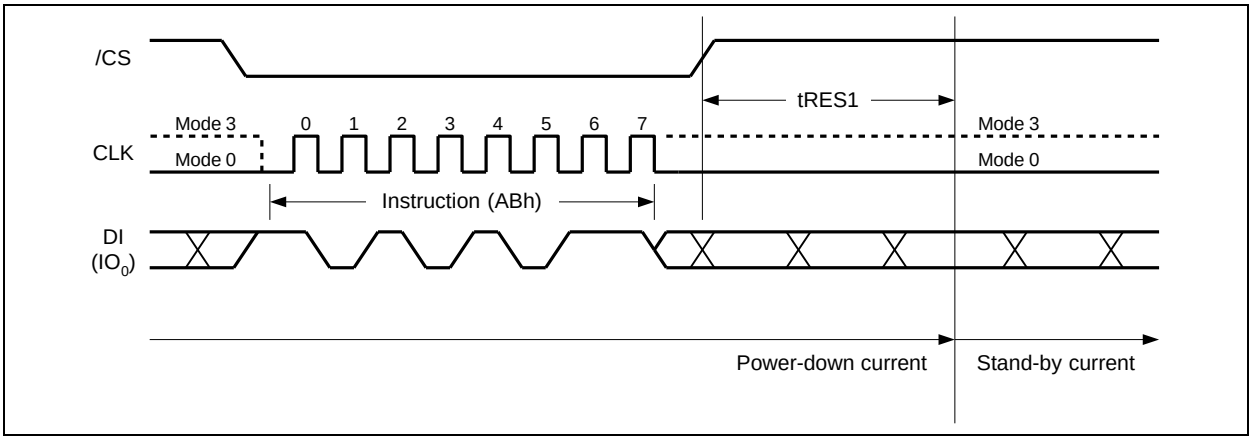

Figure 38a. Release Power-down Instruction (SPI Mode)

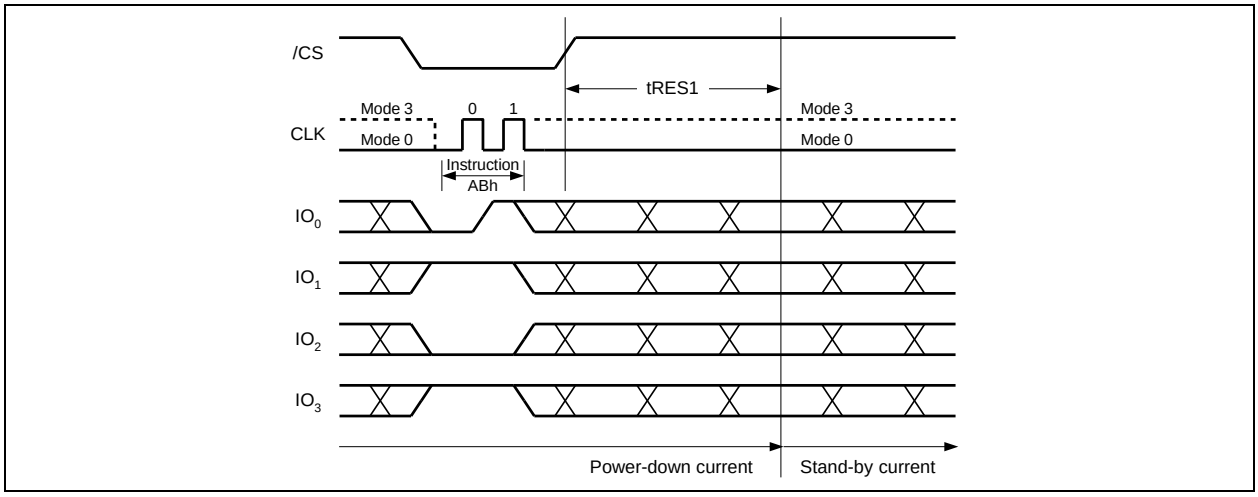

Figure 38b. Release Power-down Instruction (QPI Mode)

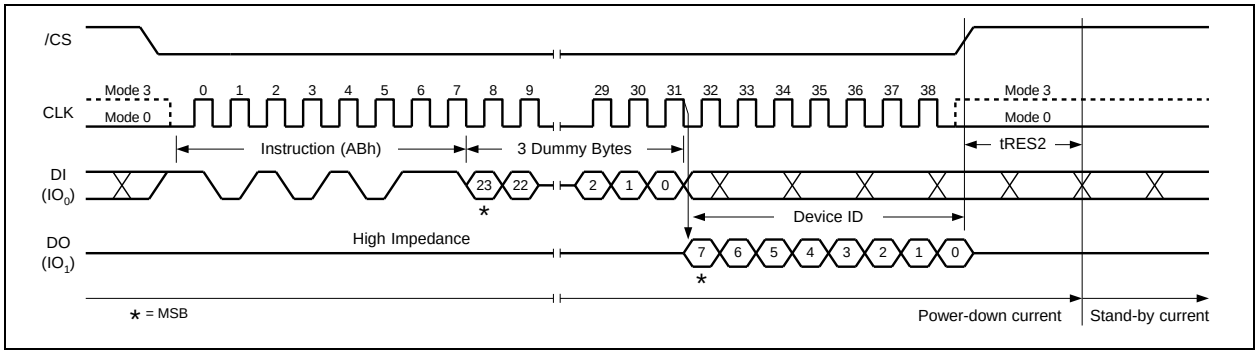

Figure 38c. Release Power-down / Device ID Instruction (SPI Mode)

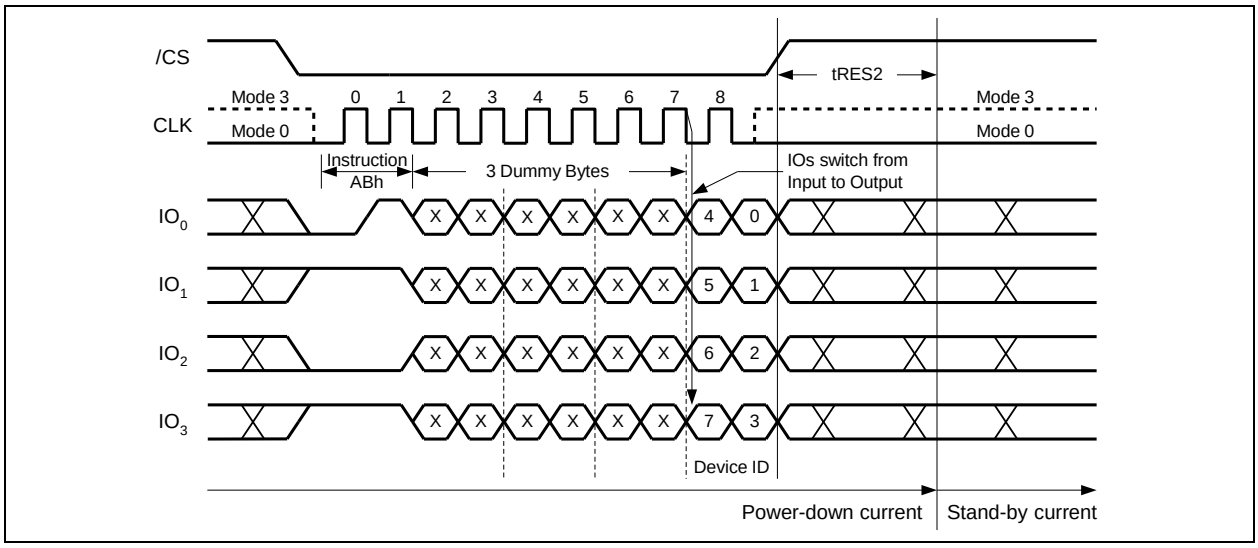

Figure 38d. Release Power-down / Device ID Instruction (QPI Mode)

8.2.26 Read Manufacturer / Device ID (90h)

The Read Manufacturer/Device ID instruction is an alternative to the Release from Power-down / Device ID instruction that provides both the JEDEC assigned manufacturer ID and the specific device ID.

The Read Manufacturer/Device ID instruction is very similar to the Release from Power-down / Device ID instruction. The instruction is initiated by driving the /CS pin low and shifting the instruction code "90h" followed by a 24-bit address (A23-A0) of 000000h. After which, the Manufacturer ID for Winbond (EFh) and the Device ID are shifted out on the falling edge of CLK with most significant bit (MSB) first as shown in Figure 39. The Device ID values for the W25Q128JV are listed in Manufacturer and Device Identification table. The instruction is completed by driving /CS high.

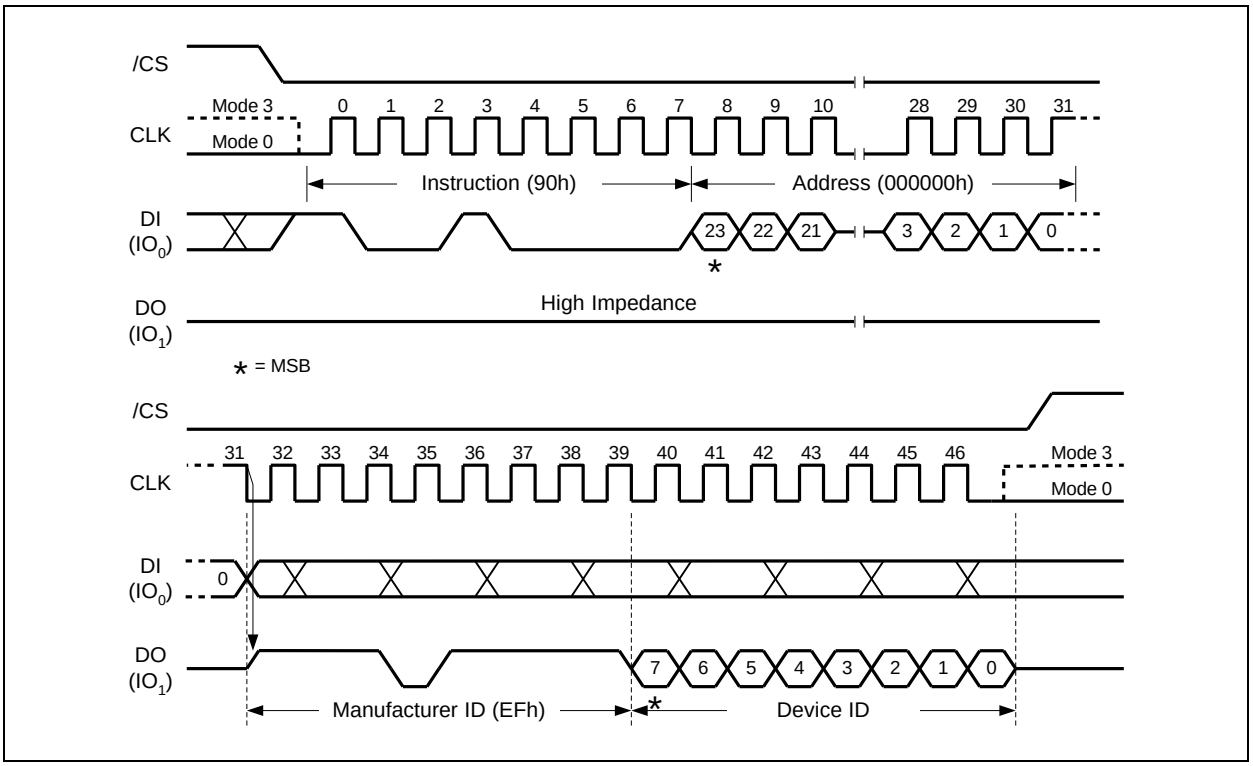

Figure 39. Read Manufacturer / Device ID Instruction (SPI Mode)

8.2.27 Read Manufacturer / Device ID Dual I/O (92h)

The Read Manufacturer / Device ID Dual I/O instruction is an alternative to the Read Manufacturer / Device ID instruction that provides both the JEDEC assigned manufacturer ID and the specific device ID at 2x speed.

The Read Manufacturer / Device ID Dual I/O instruction is similar to the Fast Read Dual I/O instruction. The instruction is initiated by driving the /CS pin low and shifting the instruction code "92h" followed by a 24-bit address (A23-A0) of 000000h, but with the capability to input the Address bits two bits per clock. After which, the Manufacturer ID for Winbond (EFh) and the Device ID are shifted out 2 bits per clock on the falling edge of CLK with most significant bits (MSB) first as shown in Figure 40. The Device ID values for the W25Q128JV are listed in Manufacturer and Device Identification table. The Manufacturer and Device IDs can be read continuously, alternating from one to the other. The instruction is completed by driving /CS high.

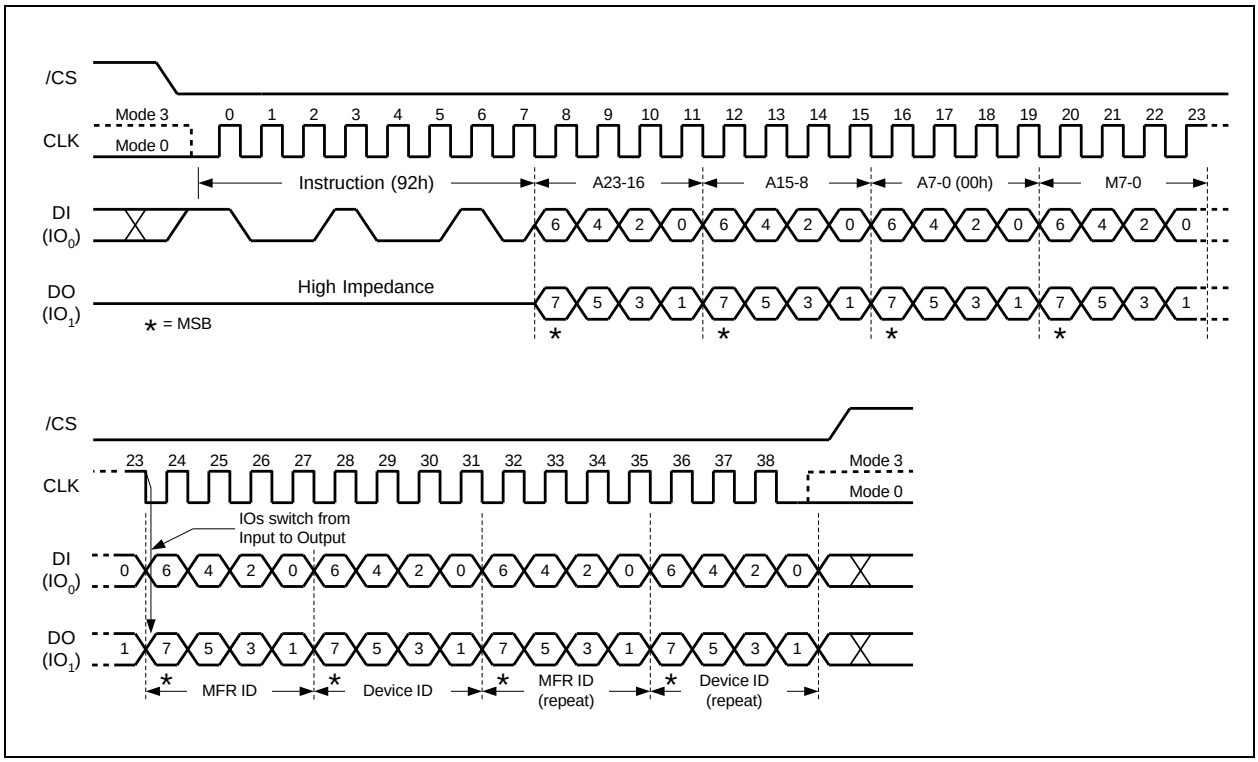

Figure 40. Read Manufacturer / Device ID Dual I/O Instruction (SPI Mode only)

Note:

The "Continuous Read Mode" bits M(7-0) must be set to Fxh to be compatible with Fast Read Dual I/O instruction.

8.2.28 Read Manufacturer / Device ID Quad I/O (94h)

The Read Manufacturer / Device ID Quad I/O instruction is an alternative to the Read Manufacturer / Device ID instruction that provides both the JEDEC assigned manufacturer ID and the specific device ID at 4x speed.

The Read Manufacturer / Device ID Quad I/O instruction is similar to the Fast Read Quad I/O instruction. The instruction is initiated by driving the /CS pin low and shifting the instruction code "94h" followed by a four clock dummy cycles and then a 24-bit address (A23-A0) of 000000h, but with the capability to input the Address bits four bits per clock. After which, the Manufacturer ID for Winbond (EFh) and the Device ID are shifted out four bits per clock on the falling edge of CLK with most significant bit (MSB) first as shown in Figure 41. The Device ID values for the W25Q128JV are listed in Manufacturer and Device Identification table. The Manufacturer and Device IDs can be read continuously, alternating from one to the other. The instruction is completed by driving /CS high.

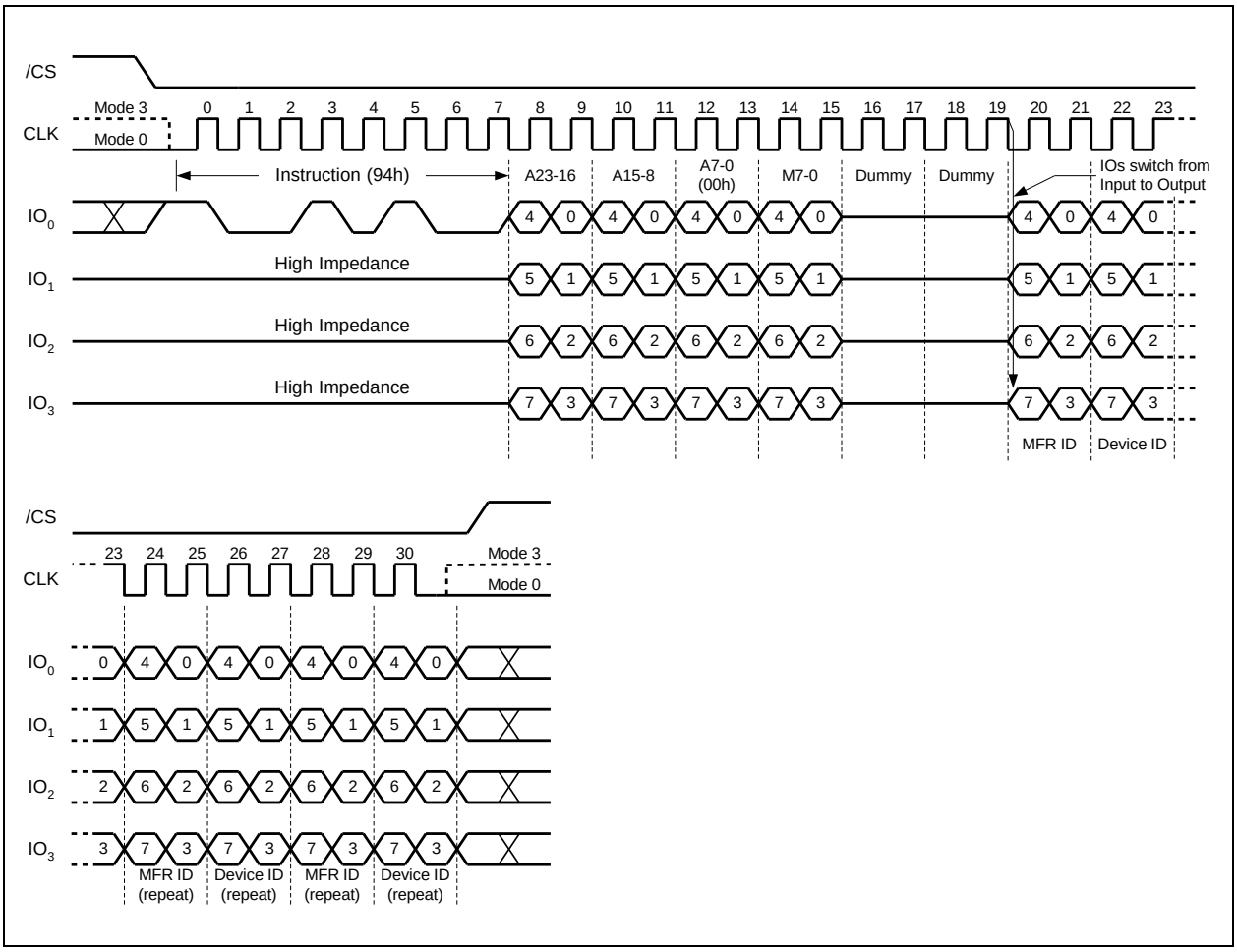

Figure 41. Read Manufacturer / Device ID Quad I/O Instruction (SPI Mode only)

Note:

The "Continuous Read Mode" bits M(7-0) must be set to Fxh to be compatible with Fast Read Quad I/O instruction.

8.2.29 Read Unique ID Number (4Bh)

The Read Unique ID Number instruction accesses a factory-set read-only 64-bit number that is unique to each W25Q128JV device. The ID number can be used in conjunction with user software methods to help prevent copying or cloning of a system. The Read Unique ID instruction is initiated by driving the /CS pin low and shifting the instruction code “4Bh” followed by a four bytes of dummy clocks. After which, the 64-bit ID is shifted out on the falling edge of CLK as shown in Figure 42.

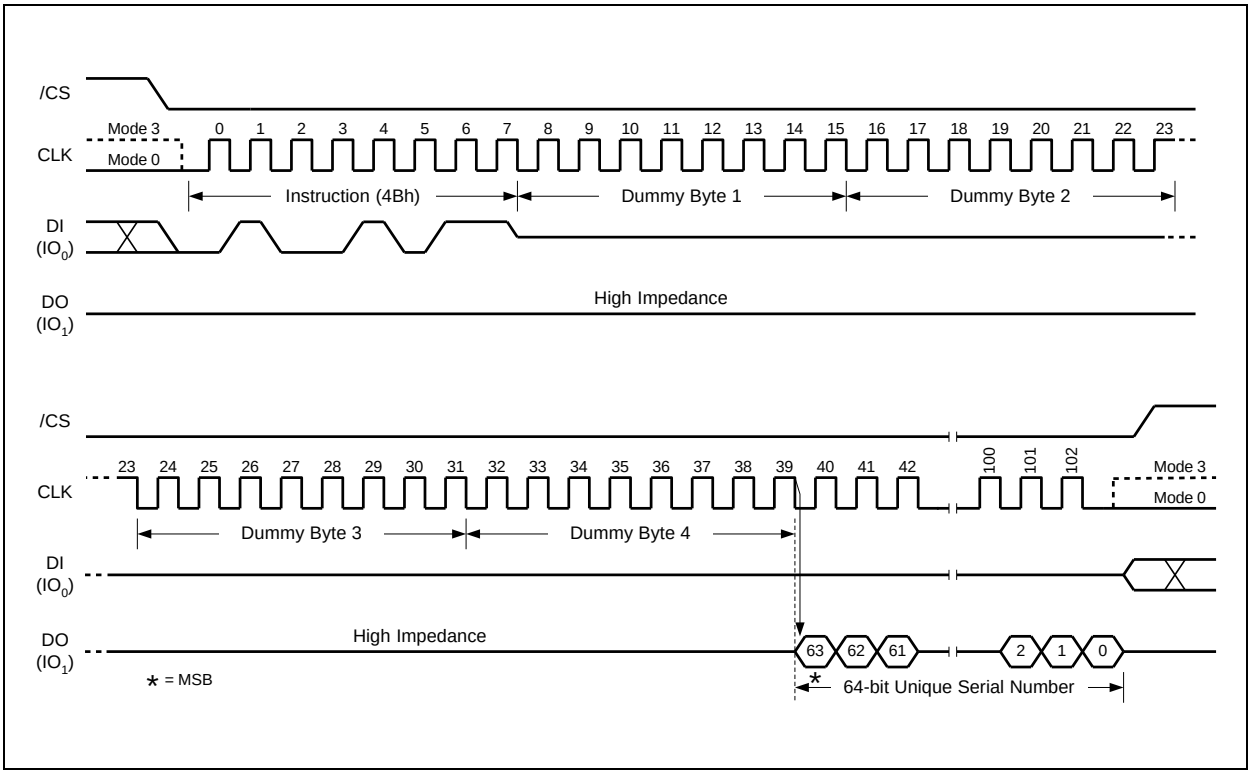

Figure 42. Read Unique ID Number Instruction (SPI Mode only)

8.2.30 Read JEDEC ID (9Fh)

For compatibility reasons, the W25Q128JV provides several instructions to electronically determine the identity of the device. The Read JEDEC ID instruction is compatible with the JEDEC standard for SPI compatible serial memories that was adopted in 2003. The instruction is initiated by driving the /CS pin low and shifting the instruction code “9Fh”. The JEDEC assigned Manufacturer ID byte for Winbond (EFh) and two Device ID bytes, Memory Type (ID15-ID8) and Capacity (ID7-ID0) are then shifted out on the falling edge of CLK with most significant bit (MSB) first as shown in Figure 43a & 43b. For memory type and capacity values refer to Manufacturer and Device Identification table.

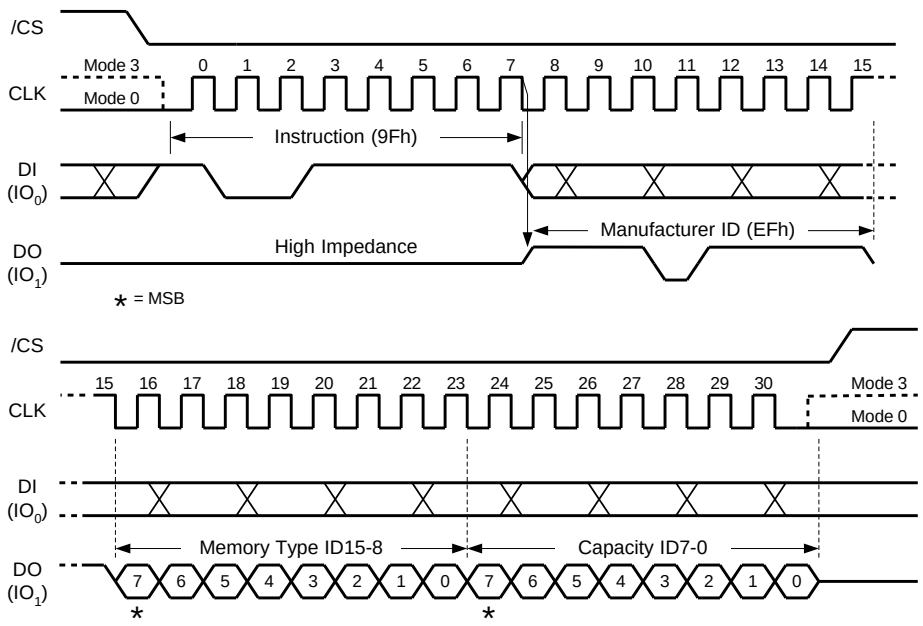

Figure 43a. Read JEDEC ID Instruction (SPI Mode)

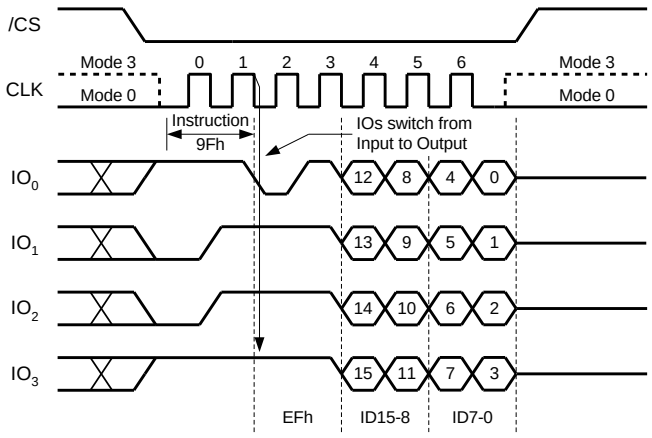

Figure 43b. Read JEDEC ID Instruction (QPI Mode)

8.2.31 Erase Security Registers (44h)

The W25Q128JV offers three 256-byte Security Registers which can be erased and programmed individually. These registers may be used by the system manufacturers to store security and other important information separately from the main memory array.

The Erase Security Register instruction is similar to the Sector Erase instruction. A Write Enable instruction must be executed before the device will accept the Erase Security Register Instruction (Status Register bit WEL must equal 1). The instruction is initiated by driving the /CS pin low and shifting the instruction code "44h" followed by a 24-bit address (A23-A0) to erase one of the three security registers.

ADDRESS	A23-16	A15-12	A11-8	A7-0
Security Register #1	00h	0 0 0 1	0 0 0 0	Don't Care
Security Register #2	00h	0 0 1 0	0 0 0 0	Don't Care
Security Register #3	00h	0 0 1 1	0 0 0 0	Don't Care

The Erase Security Register instruction sequence is shown in Figure 45. The /CS pin must be driven high after the eighth bit of the last byte has been latched. If this is not done the instruction will not be executed. After /CS is driven high, the self-timed Erase Security Register operation will commence for a time duration of t_{SE} (See AC Characteristics). While the Erase Security Register cycle is in progress, the Read Status Register instruction may still be accessed for checking the status of the BUSY bit. The BUSY bit is a 1 during the erase cycle and becomes a 0 when the cycle is finished and the device is ready to accept other instructions again. After the Erase Security Register cycle has finished the Write Enable Latch (WEL) bit in the Status Register is cleared to 0. The Security Register Lock Bits (LB3-1) in the Status Register-2 can be used to OTP protect the security registers. Once a lock bit is set to 1, the corresponding security register will be permanently locked, Erase Security Register instruction to that register will be ignored (Refer to section 7.1.8 for detail descriptions).

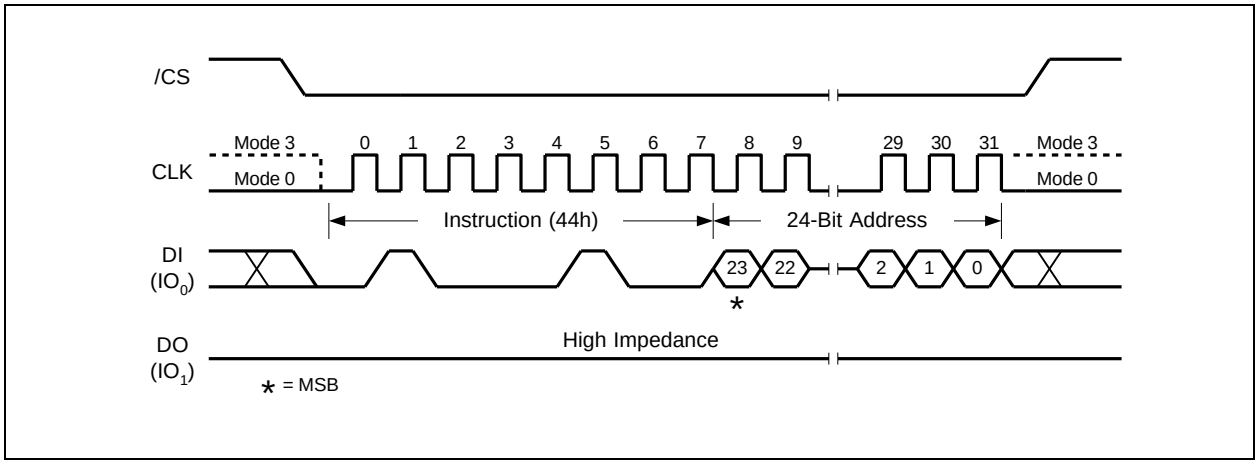

Figure 45. Erase Security Registers Instruction (SPI Mode only)

8.2.32 Read SFDP Register (5Ah)

The W25Q128JV features a 256-Byte Serial Flash Discoverable Parameter (SFDP) register that contains information about device configurations, available instructions and other features. The SFDP parameters are stored in one or more Parameter Identification (PID) tables. Currently only one PID table is specified, but more may be added in the future. The Read SFDP Register instruction is compatible with the SFDP standard initially established in 2010 for PC and other applications, as well as the JEDEC standard JESD216 that is published in 2011. Most Winbond SpiFlash Memories shipped after 2011 (date code 1124 and beyond) support the SFDP feature as specified in the applicable datasheet.

The Read SFDP instruction is initiated by driving the /CS pin low and shifting the instruction code "5Ah" followed by a 24-bit address (A23-A0)(1) into the DI pin. Eight "dummy" clocks are also required before the SFDP register contents are shifted out on the falling edge of the 40th CLK with most significant bit (MSB) first as shown in Figure 44. For SFDP register values and descriptions, please refer to the Winbond Application Note for SFDP Definition Table.

Note 1: A23-A8 = 0; A7-A0 are used to define the starting byte address for the 256-Byte SFDP Register.

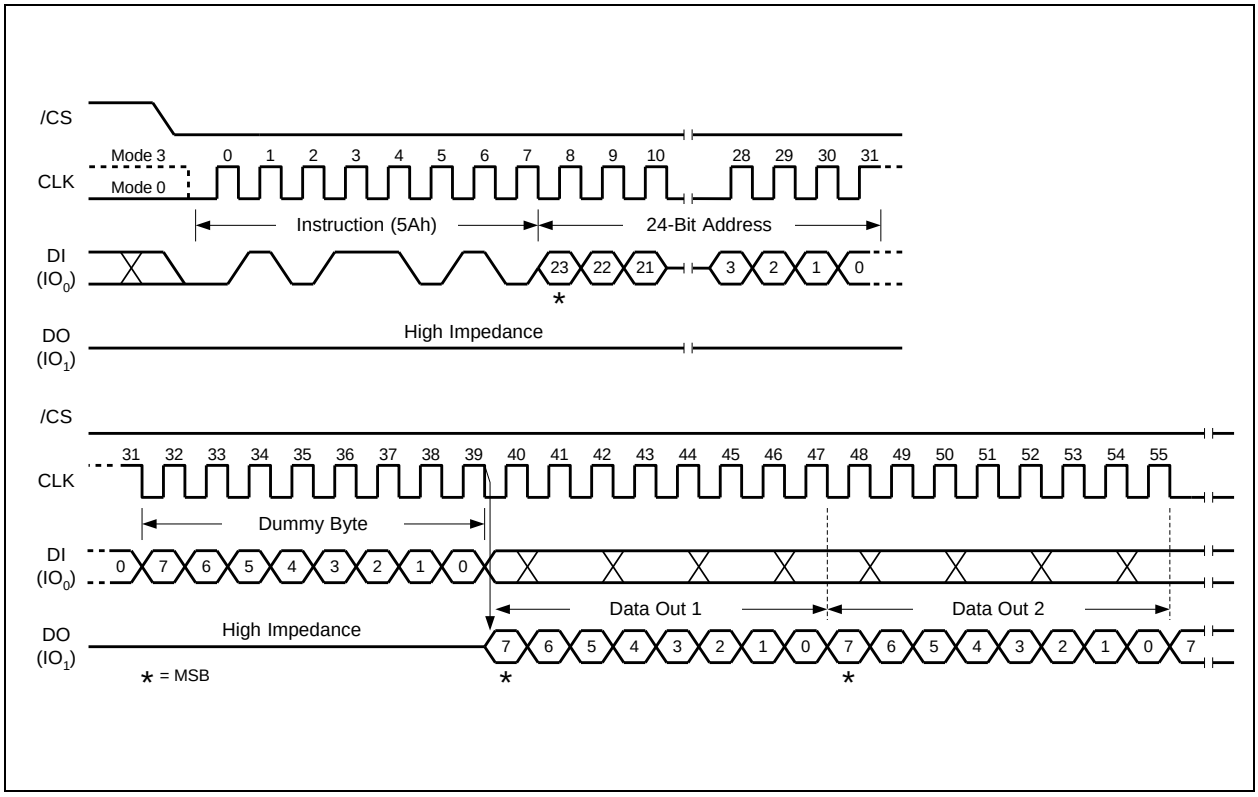

Figure 44. Read SFDP Register Instruction Sequence Diagram

8.2.33 Program Security Registers (42h)

The Program Security Register instruction is similar to the Page Program instruction. It allows from one byte to 256 bytes of security register data to be programmed at previously erased (FFh) memory locations. A Write Enable instruction must be executed before the device will accept the Program Security Register Instruction (Status Register bit WEL= 1). The instruction is initiated by driving the /CS pin low then shifting the instruction code "42h" followed by a 24-bit address (A23-A0) and at least one data byte, into the DI pin. The /CS pin must be held low for the entire length of the instruction while data is being sent to the device.

ADDRESS	A23-16	A15-12	A11-8	A7-0
Security Register #1	00h	0 0 0 1	0 0 0 0	Byte Address
Security Register #2	00h	0 0 1 0	0 0 0 0	Byte Address
Security Register #3	00h	0 0 1 1	0 0 0 0	Byte Address

The Program Security Register instruction sequence is shown in Figure 46. The Security Register Lock Bits (LB3-1) in the Status Register-2 can be used to OTP protect the security registers. Once a lock bit is set to 1, the corresponding security register will be permanently locked, Program Security Register instruction to that register will be ignored (See 7.1.8, 8.2.25 for detail descriptions).

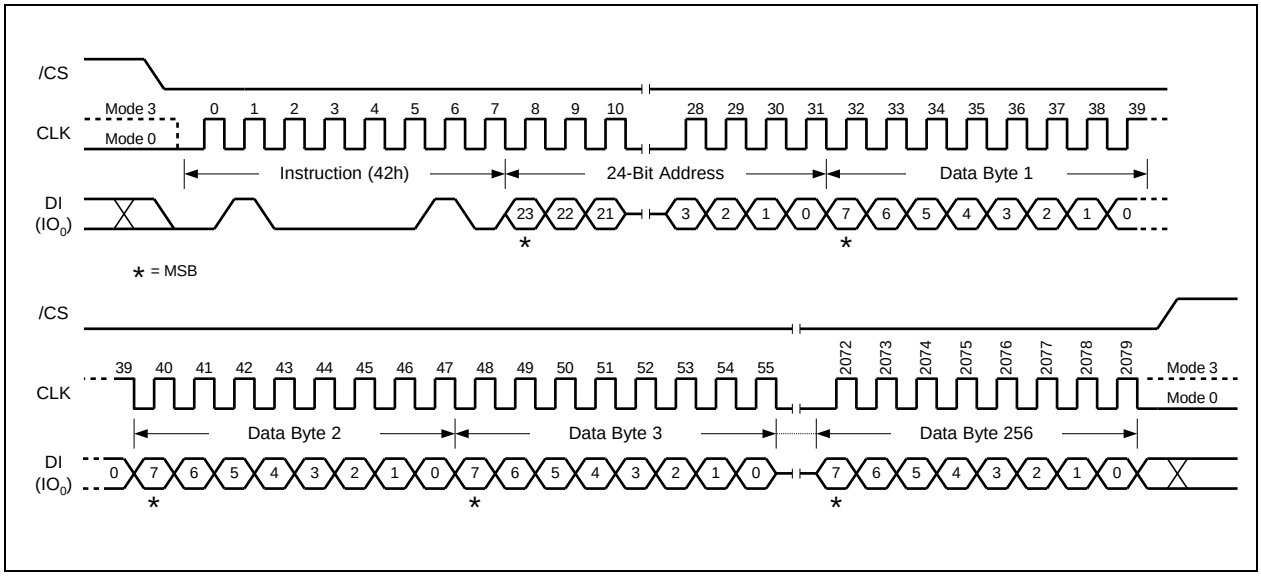

Figure 46. Program Security Registers Instruction (SPI Mode only)

8.2.34 Read Security Registers (48h)

The Read Security Register instruction is similar to the Fast Read instruction and allows one or more data bytes to be sequentially read from one of the four security registers. The instruction is initiated by driving the /CS pin low and then shifting the instruction code “48h” followed by a 24-bit address (A23-A0) and eight “dummy” clocks into the DI pin. The code and address bits are latched on the rising edge of the CLK pin. After the address is received, the data byte of the addressed memory location will be shifted out on the DO pin at the falling edge of CLK with most significant bit (MSB) first. The byte address is automatically incremented to the next byte address after each byte of data is shifted out. Once the byte address reaches the last byte of the register (byte address FFh), it will reset to address 00h, the first byte of the register, and continue to increment. The instruction is completed by driving /CS high. The Read Security Register instruction sequence is shown in Figure 47. If a Read Security Register instruction is issued while an Erase, Program or Write cycle is in process (BUSY=1) the instruction is ignored and will not have any effects on the current cycle. The Read Security Register instruction allows clock rates from D.C. to a maximum of FR (see AC Electrical Characteristics).

ADDRESS	A23-16	A15-12	A11-8	A7-0
Security Register #1	00h	0 0 0 1	0 0 0 0	Byte Address
Security Register #2	00h	0 0 1 0	0 0 0 0	Byte Address
Security Register #3	00h	0 0 1 1	0 0 0 0	Byte Address

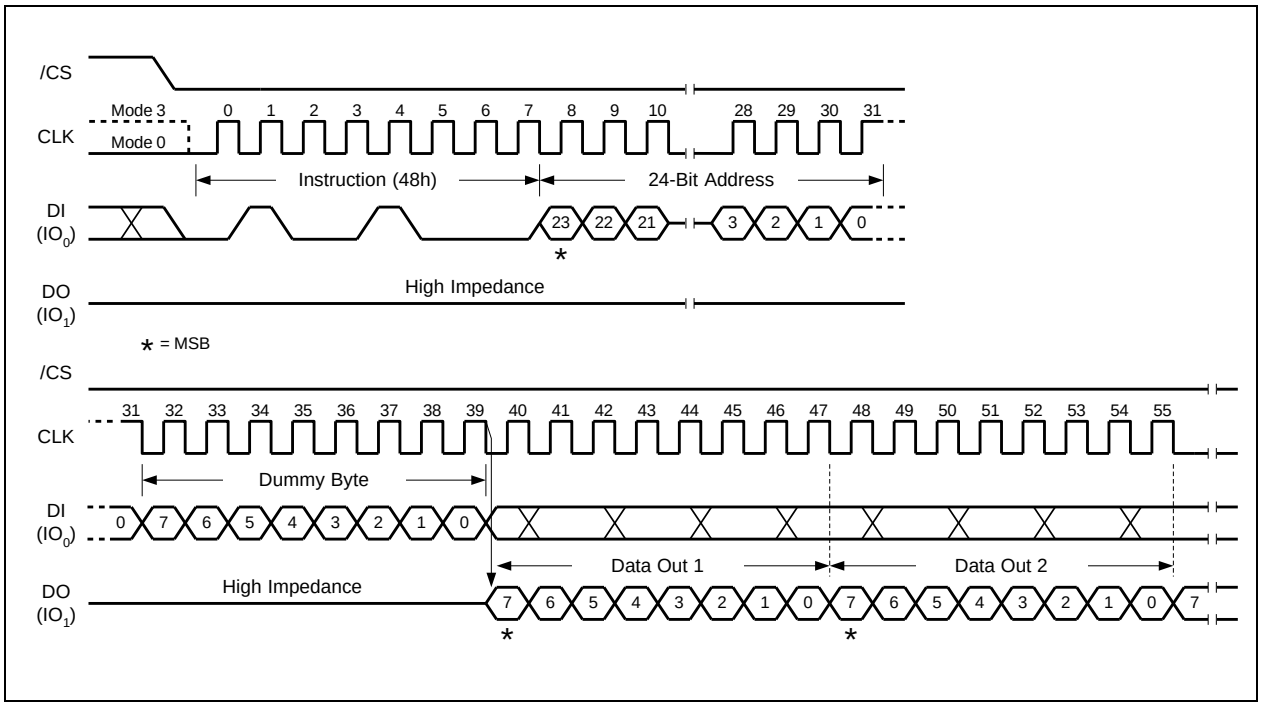

Figure 47. Read Security Registers Instruction (SPI Mode only)

8.2.35 Set Read Parameters (C0h)

In QPI mode, to accommodate a wide range of applications with different needs for either maximum read frequency or minimum data access latency, “Set Read Parameters (C0h)” instruction can be used to configure the number of dummy clocks for “Fast Read (0Bh)”, “Fast Read Quad I/O (EBh)” & “Burst Read with Wrap (0Ch)” instructions, and to configure the number of bytes of “Wrap Length” for the “Burst Read with Wrap (0Ch)” instruction.

In Standard SPI mode, the “Set Read Parameters (C0h)” instruction is not accepted. The dummy clocks for various Fast Read instructions in Standard/Dual/Quad SPI mode are fixed, please refer to the Instruction Table 1-2 for details. The “Wrap Length” is set by W5-4 bit in the “Set Burst with Wrap (77h)” instruction. This setting will remain unchanged when the device is switched from Standard SPI mode to QPI mode.

The default “Wrap Length” after a power up or a Reset instruction is 8 bytes, the default number of dummy clocks is 2. The number of dummy clocks is only programmable for “Fast Read (0Bh)”, “Fast Read Quad I/O (EBh)” & “Burst Read with Wrap (0Ch)” instructions in the QPI mode. Whenever the device is switched from SPI mode to QPI mode, the number of dummy clocks should be set again, prior to any 0Bh, EBh or 0Ch instructions.

P5 – P4	DUMMY CLOCKS	MAXIMUM READ FREQ. (Vcc=2.7-3.0V)	MAXIMUM READ FREQ. (Vcc=3.0-3.6V)
0 0	2	33MHz	50MHz
0 1	4	50MHz	80MHz
1 0	6	80MHz	104MHz
1 1	8	104MHz	133MHz

P1 – P0	WRAP LENGTH
0 0	8-byte
0 1	16-byte
1 0	32-byte
1 1	64-byte

Note: 4-bytes address alignment for QPI Read: read address start from A1,A0=0,0

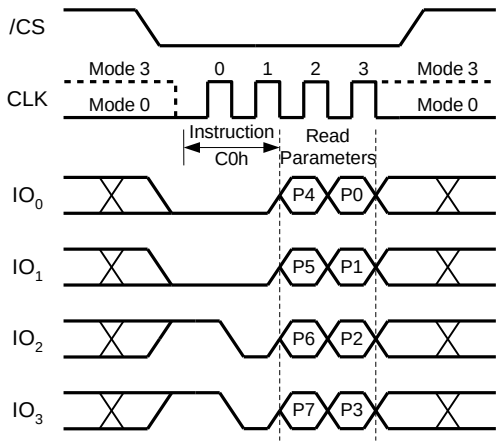

Figure 48. Set Read Parameters Instruction (QPI Mode only)

8.2.36 Burst Read with Wrap (0Ch)

The “Burst Read with Wrap (0Ch)” instruction provides an alternative way to perform the read operation with “Wrap Around” in QPI mode. The instruction is similar to the “Fast Read (0Bh)” instruction in QPI mode, except the addressing of the read operation will “Wrap Around” to the beginning boundary of the “Wrap Length” once the ending boundary is reached.

The “Wrap Length” and the number of dummy clocks can be configured by the “Set Read Parameters (C0h)” instruction.

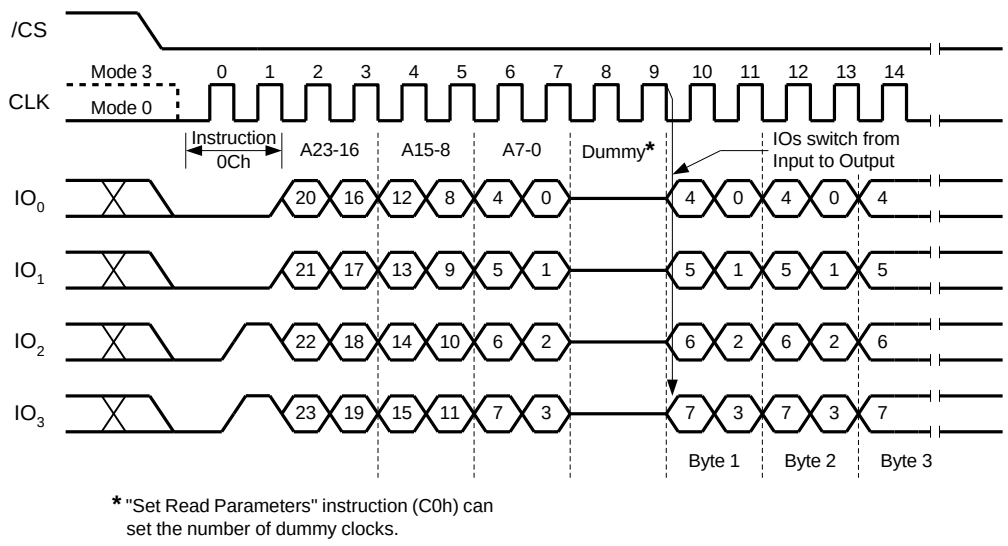

Figure 49. Burst Read with Wrap Instruction (QPI Mode only)

8.2.37 DTR Burst Read with Wrap (0Eh)

The “DTR Burst Read with Wrap (0Eh)” instruction provides an alternative way to perform the read operation with “Wrap Around” in QPI mode. The instruction is similar to the “Fast Read (0Bh)” instruction in QPI mode, except the addressing of the read operation will “Wrap Around” to the beginning boundary of the “Wrap Length” once the ending boundary is reached.

The “Wrap Length” can be configured by the “Set Read Parameters (C0h)” instruction.

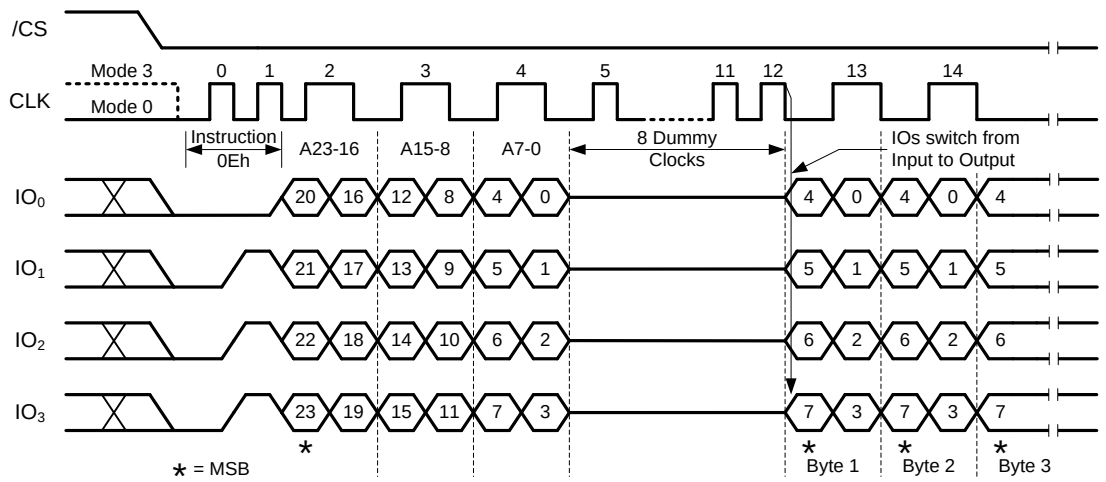

Figure 50. DTR Burst Read with Wrap Instruction (QPI Mode only)

8.2.38 Enter QPI Mode (38h)

The W25Q128JV support both Standard/Dual/Quad Serial Peripheral Interface (SPI) and Quad Peripheral Interface (QPI). However, SPI mode and QPI mode cannot be used at the same time. “Enter QPI (38h)” instruction is the only way to switch the device from SPI mode to QPI mode.

Upon power-up, the default state of the device upon is Standard/Dual/Quad SPI mode. This provides full backward compatibility with earlier generations of Winbond serial flash memories. See Instruction Set Table 1-3 for all supported SPI commands. In order to switch the device to QPI mode, the Quad Enable (QE) bit in Status Register-2 must be set to 1 first, and an “Enter QPI (38h)” instruction must be issued. If the Quad Enable (QE) bit is 0, the “Enter QPI (38h)” instruction will be ignored and the device will remain in SPI mode.

See Instruction Set Table 3 for all the commands supported in QPI mode.

When the device is switched from SPI mode to QPI mode, the existing Write Enable and Program/Erase Suspend status, and the Wrap Length setting will remain unchanged.

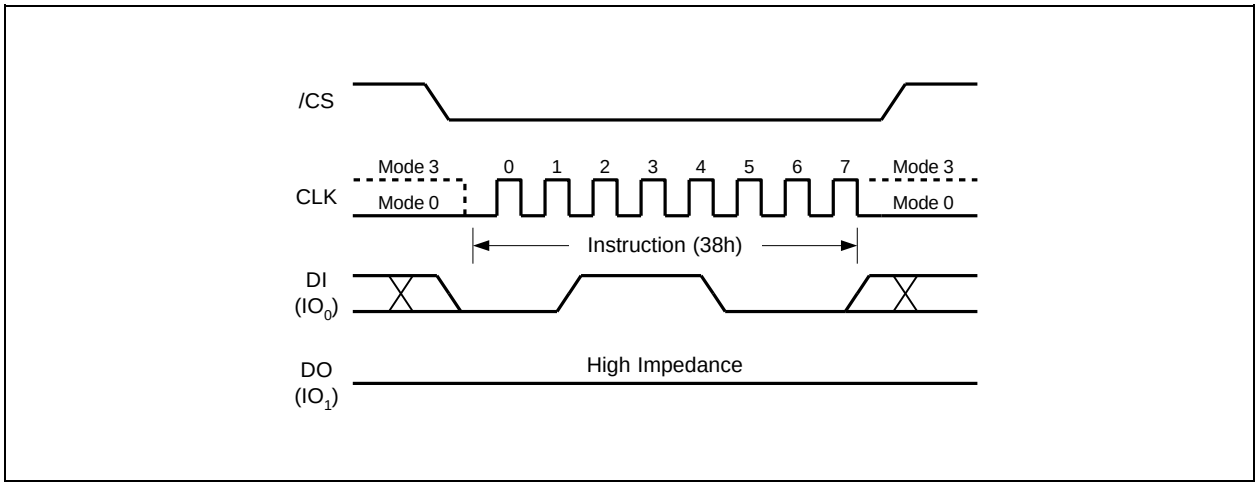

Figure 51. Enter QPI Instruction (SPI Mode only)

8.2.39 Exit QPI Mode (FFh)

In order to exit the QPI mode and return to the Standard/Dual/Quad SPI mode, an “Exit QPI (FFh)” instruction must be issued.

When the device is switched from QPI mode to SPI mode, the existing Write Enable Latch (WEL) and Program/Erase Suspend status, and the Wrap Length setting will remain unchanged.

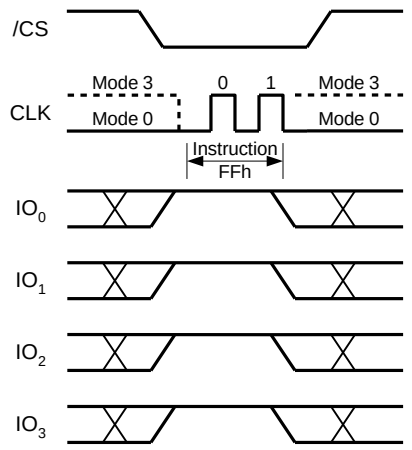

Figure 52. Exit QPI Instruction (QPI Mode only)

8.2.40 Individual Block/Sector Lock (36h)

The Individual Block/Sector Lock provides an alternative way to protect the memory array from adverse Erase/Program. In order to use the Individual Block/Sector Locks, the WPS bit in Status Register-3 must be set to 1. If WPS=0, the write protection will be determined by the combination of CMP, SEC, TB, BP[2:0] bits in the Status Registers. The Individual Block/Sector Lock bits are volatile bits. The default values after device power up or after a Reset are 1, so the entire memory array is being protected.

To lock a specific block or sector as illustrated in Figure 4d, an Individual Block/Sector Lock command must be issued by driving /CS low, shifting the instruction code “36h” into the Data Input (DI) pin on the rising edge of CLK, followed by a 24-bit address and then driving /CS high. A Write Enable instruction must be executed before the device will accept the Individual Block/Sector Lock Instruction (Status Register bit WEL= 1).

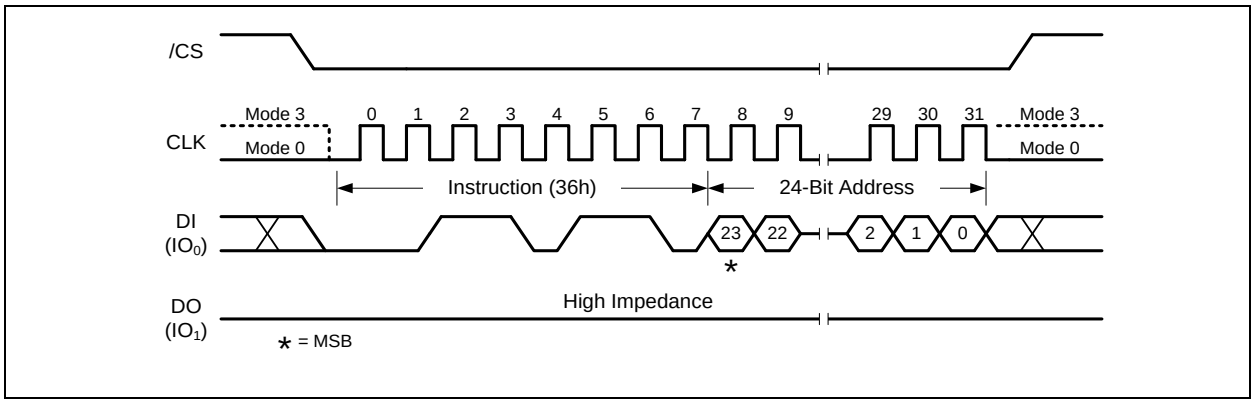

Figure 53a. Individual Block/Sector Lock Instruction (SPI Mode)

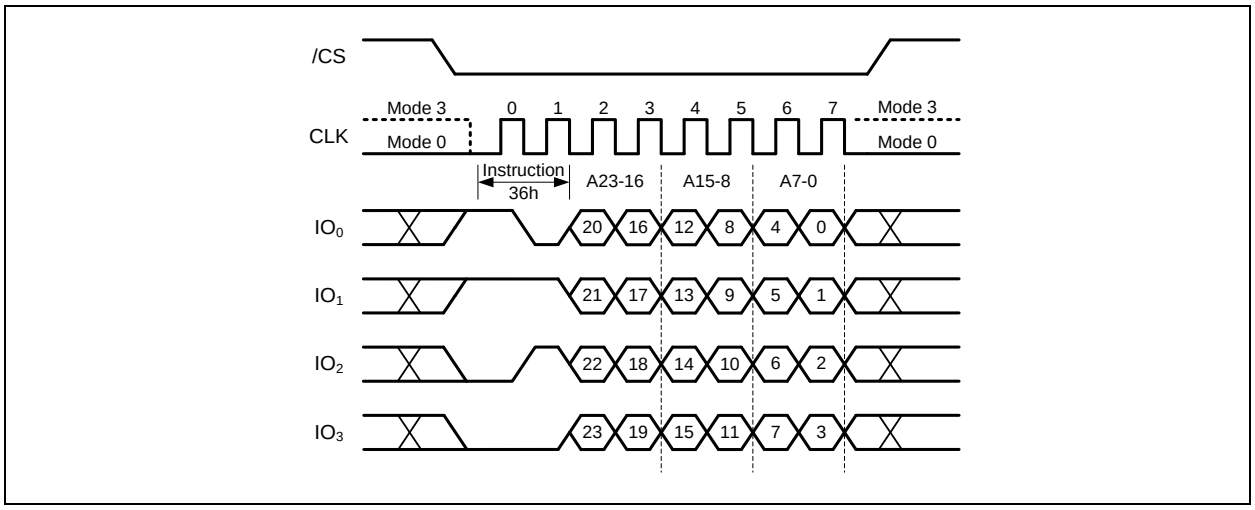

Figure 53b. Individual Block/Sector Lock Instruction (QPI Mode)

8.2.41 Individual Block/Sector Unlock (39h)

The Individual Block/Sector Lock provides an alternative way to protect the memory array from adverse Erase/Program. In order to use the Individual Block/Sector Locks, the WPS bit in Status Register-3 must be set to 1. If WPS=0, the write protection will be determined by the combination of CMP, SEC, TB, BP[2:0] bits in the Status Registers. The Individual Block/Sector Lock bits are volatile bits. The default values after device power up or after a Reset are 1, so the entire memory array is being protected.

To unlock a specific block or sector as illustrated in Figure 4d, an Individual Block/Sector Unlock command must be issued by driving /CS low, shifting the instruction code “39h” into the Data Input (DI) pin on the rising edge of CLK, followed by a 24-bit address and then driving /CS high. A Write Enable instruction must be executed before the device will accept the Individual Block/Sector Unlock Instruction (Status Register bit WEL= 1).

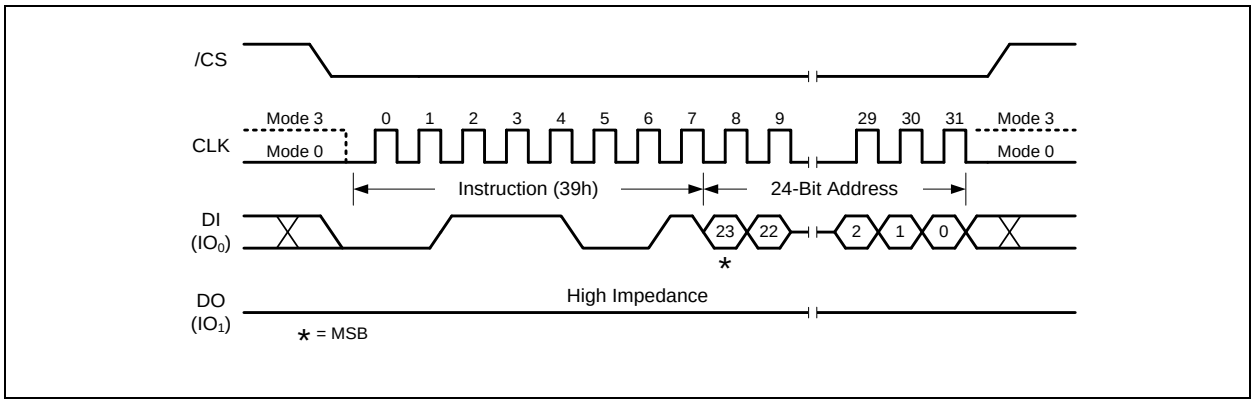

Figure 54a. Individual Block Unlock Instruction (SPI Mode)

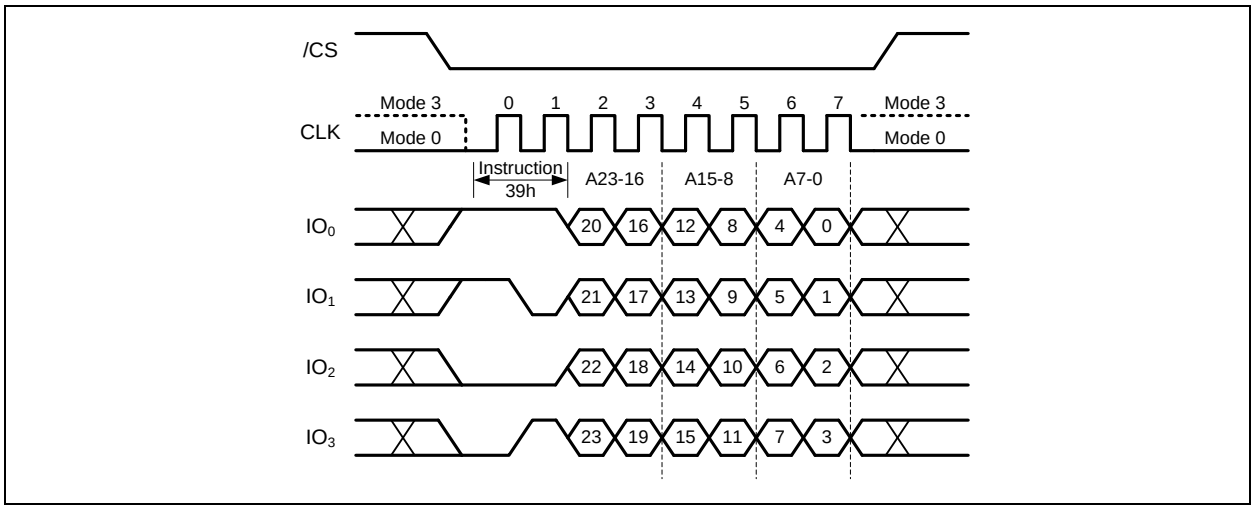

Figure 54b. Individual Block Unlock Instruction (QPI Mode)

8.2.42 Read Block/Sector Lock (3Dh)

The Individual Block/Sector Lock provides an alternative way to protect the memory array from adverse Erase/Program. In order to use the Individual Block/Sector Locks, the WPS bit in Status Register-3 must be set to 1. If WPS=0, the write protection will be determined by the combination of CMP, SEC, TB, BP[2:0] bits in the Status Registers. The Individual Block/Sector Lock bits are volatile bits. The default values after device power up or after a Reset are 1, so the entire memory array is being protected.

To read out the lock bit value of a specific block or sector as illustrated in Figure 4d, a Read Block/Sector Lock command must be issued by driving /CS low, shifting the instruction code "3Dh" into the Data Input (DI) pin on the rising edge of CLK, followed by a 24-bit address. The Block/Sector Lock bit value will be shifted out on the DO pin at the falling edge of CLK with most significant bit (MSB) first as shown in Figure 55. If the least significant bit (LSB) is 1, the corresponding block/sector is locked; if LSB=0, the corresponding block/sector is unlocked, Erase/Program operation can be performed.

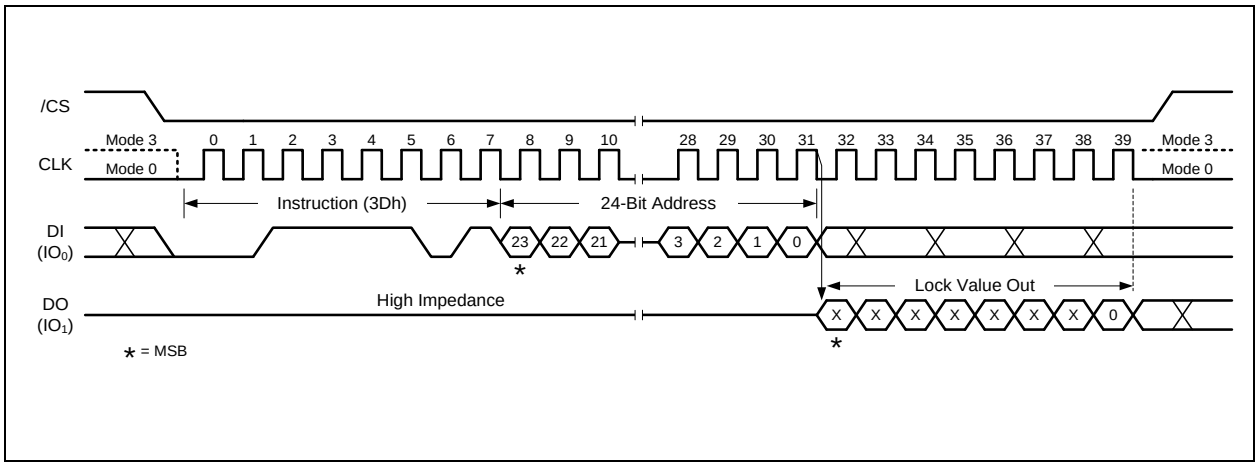

Figure 55a. Read Block Lock Instruction (SPI Mode)

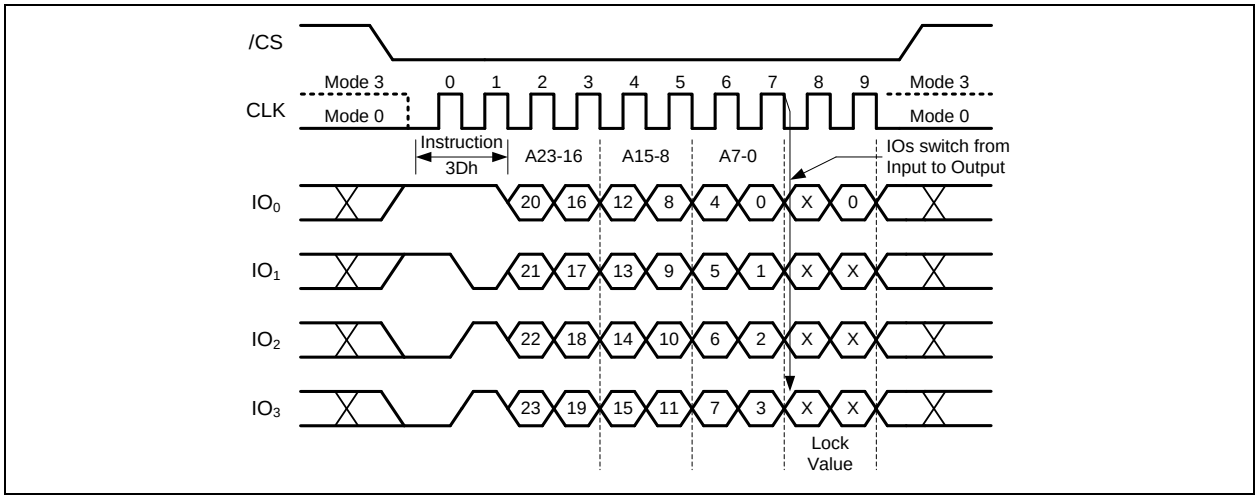

Figure 55b. Read Block Lock Instruction (QPI Mode)

8.2.43 Global Block/Sector Lock (7Eh)

All Block/Sector Lock bits can be set to 1 by the Global Block/Sector Lock instruction. The command must be issued by driving /CS low, shifting the instruction code “7Eh” into the Data Input (DI) pin on the rising edge of CLK, and then driving /CS high. A Write Enable instruction must be executed before the device will accept the Global Block/Sector Lock Instruction (Status Register bit WEL= 1).

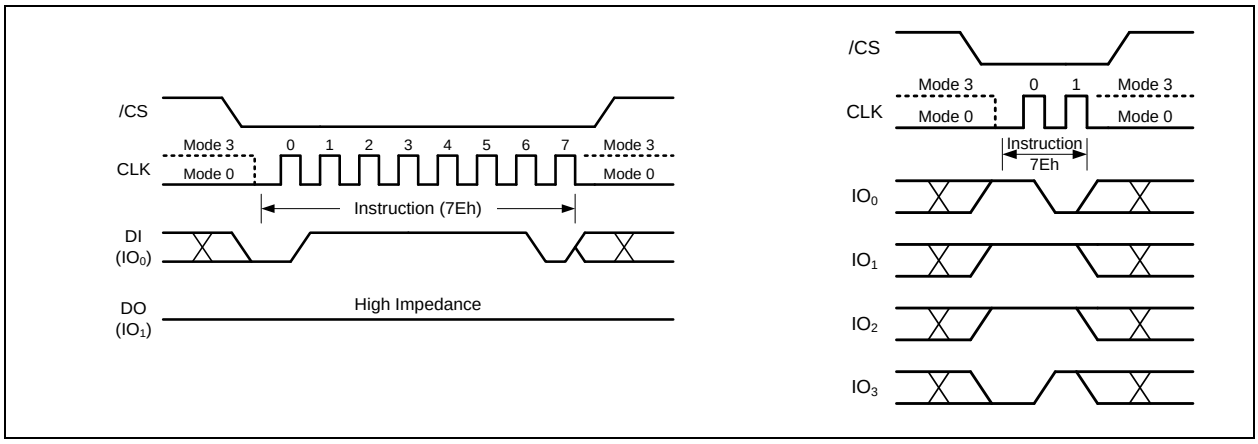

Figure 56. Global Block Lock Instruction for SPI Mode (left) or QPI Mode (right)

8.2.44 Global Block/Sector Unlock (98h)

All Block/Sector Lock bits can be set to 0 by the Global Block/Sector Unlock instruction. The command must be issued by driving /CS low, shifting the instruction code “98h” into the Data Input (DI) pin on the rising edge of CLK, and then driving /CS high. A Write Enable instruction must be executed before the device will accept the Global Block/Sector Unlock Instruction (Status Register bit WEL= 1).

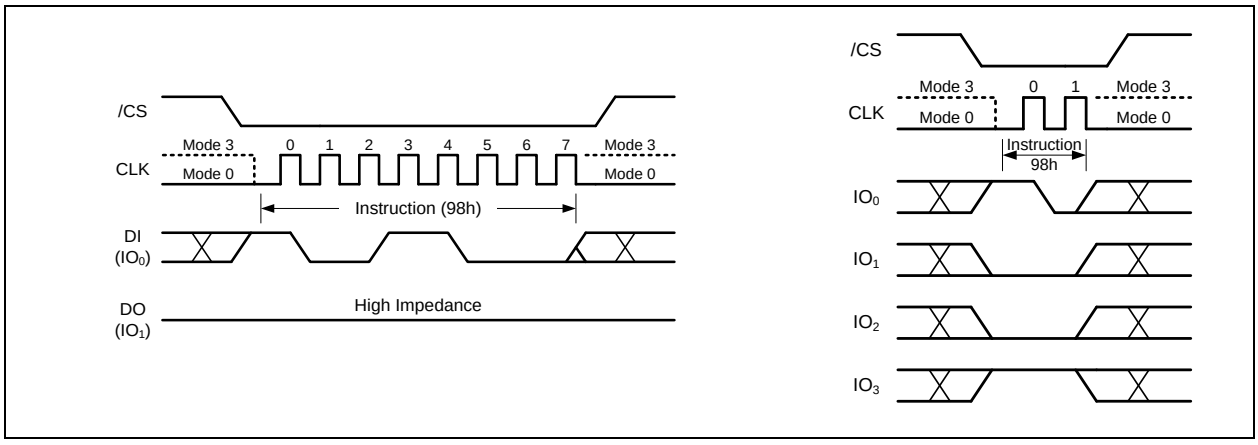

Figure 57. Global Block Unlock Instruction for SPI Mode (left) or QPI Mode (right)

8.2.45 Enable Reset (66h) and Reset Device (99h)

Because of the small package and the limitation on the number of pins, the W25Q128JV provide a software Reset instruction instead of a dedicated RESET pin. Once the Reset instruction is accepted, any on-going internal operations will be terminated and the device will return to its default power-on state and lose all the current volatile settings, such as Volatile Status Register bits, Write Enable Latch (WEL) status, Program/Erase Suspend status, Read parameter setting (P7-P0), Continuous Read Mode bit setting (M7-M0) and Wrap Bit setting (W6-W4).

“Enable Reset (66h)” and “Reset (99h)” instructions can be issued in either SPI mode or QPI mode. To avoid accidental reset, both instructions must be issued in sequence. Any other commands other than “Reset (99h)” after the “Enable Reset (66h)” command will disable the “Reset Enable” state. A new sequence of “Enable Reset (66h)” and “Reset (99h)” is needed to reset the device. Once the Reset command is accepted by the device, the device will take approximately tRST=30us to reset. During this period, no command will be accepted.

Data corruption may happen if there is an on-going or suspended internal Erase or Program operation when Reset command sequence is accepted by the device. It is recommended to check the BUSY bit and the SUS bit in Status Register before issuing the Reset command sequence.

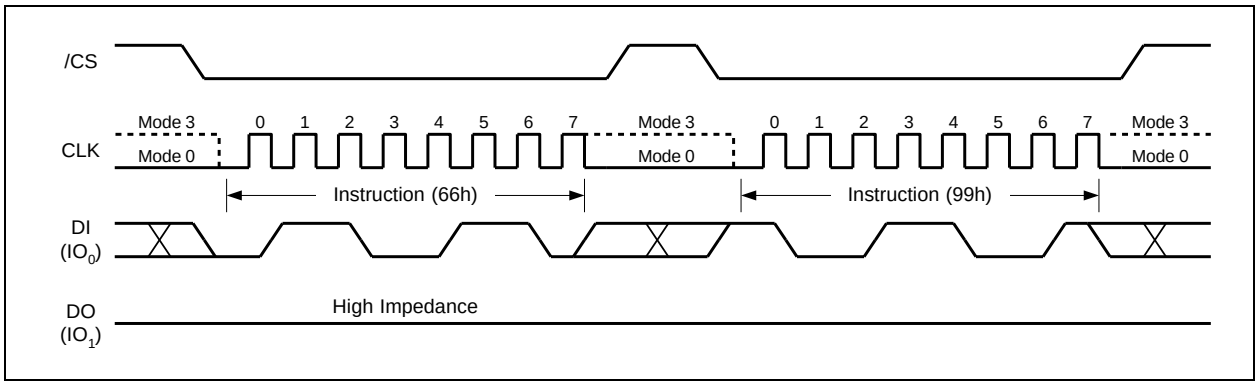

Figure 58a. Enable Reset and Reset Instruction Sequence (SPI Mode)

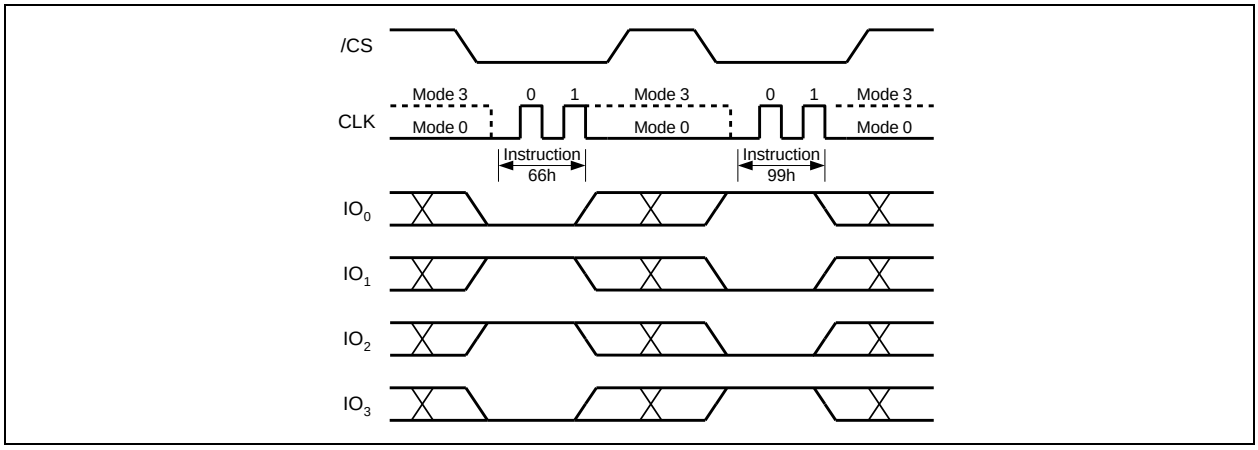

Figure 58b. Enable Reset and Reset Instruction Sequence (QPI Mode)

9. ELECTRICAL CHARACTERISTICS

9.1 Absolute Maximum Ratings (1)

PARAMETERS	SYMBOL	CONDITIONS	RANGE	UNIT
Supply Voltage	VCC		–0.6 to 4.6	V
Voltage Applied to Any Pin	VIO	Relative to Ground	–0.6 to VCC+0.4	V
Transient Voltage on any Pin	VIOT	<20nS Transient Relative to Ground	–2.0V to VCC+2.0V	V
Storage Temperature	TSTG		–65 to +150	°C
Lead Temperature	TLEAD		See Note (2)	°C
Electrostatic Discharge Voltage	VESD	Human Body Model(3)	–2000 to +2000	V

Notes:

1. This device has been designed and tested for the specified operation ranges. Proper operation outside of these levels is not guaranteed. Exposure to absolute maximum ratings may affect device reliability. Exposure beyond absolute maximum ratings may cause permanent damage.
2. Compliant with JEDEC Standard J-STD-20C for small body Sn-Pb or Pb-free (Green) assembly and the European directive on restrictions on hazardous substances (RoHS) 2002/95/EU.
3. JEDEC Std JESD22-A114A (C1=100pF, R1=1500 ohms, R2=500 ohms).

9.2 Operating Ranges

PARAMETER	SYMBOL	CONDITIONS	SPEC		UNIT
			MIN	MAX	
Supply Voltage(1)	VCC	F_R = 133MHz, f_R = 50MHz	3.0	3.6	V
		F_R = 104MHz, f_R = 50MHz	2.7	3.0	V
Ambient Temperature, Operating	TA	Industrial	–40	+85	°C
		Industrial Plus	–40	+105	°C

Note:

1. VCC voltage during Read can operate across the min and max range but should not exceed ±10% of the programming (erase/write) voltage.

9.3 Power-Up Power-Down Timing and Requirements

PARAMETER	SYMBOL	SPEC		UNIT
		MIN	MAX	
VCC (min) to /CS Low	t_{VSL}(1)	20		µs
Time Delay Before Write Instruction	t_{PUW}(1)	5		ms
Write Inhibit Threshold Voltage	V_{WI}(1)	1.0	2.0	V

Note:

1. These parameters are characterized only.

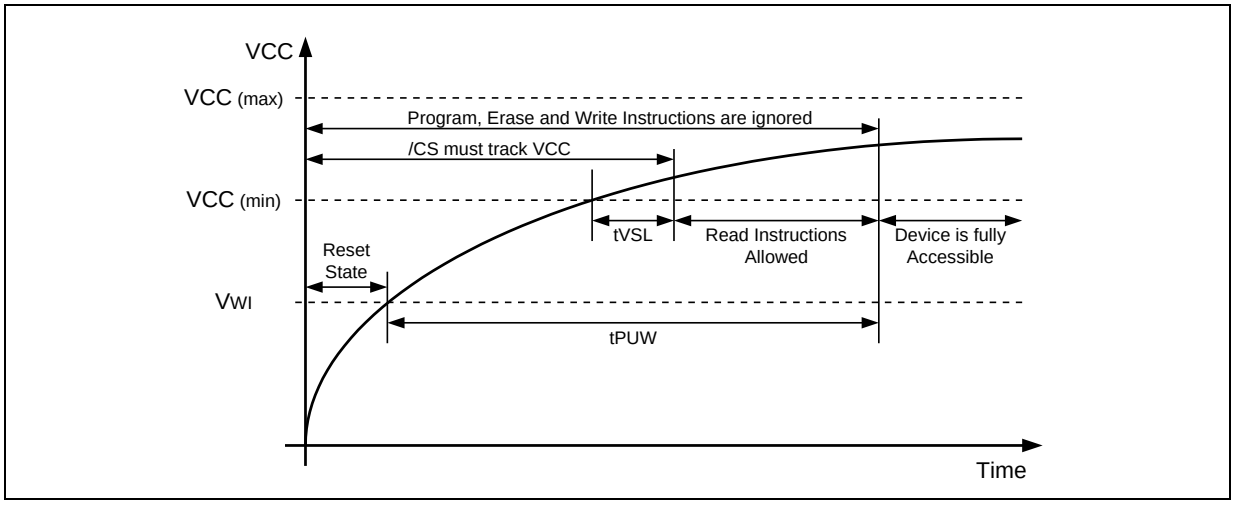

Figure 58a. Power-up Timing and Voltage Levels

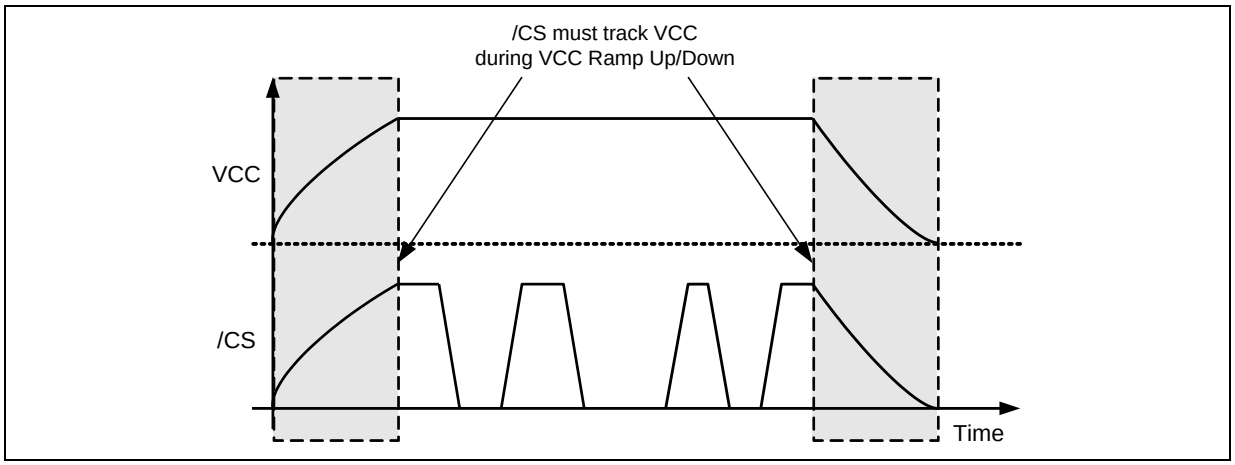

Figure 58b. Power-up, Power-Down Requirement

9.4 DC Electrical Characteristics-

PARAMETER	SYMBOL	CONDITIONS	SPEC			UNIT
			MIN	TYP	MAX	
Input Capacitance	C_{IN}(1)	V_{IN} = 0V(1)			6	pF
Output Capacitance	Cout(1)	V_{OUT} = 0V(1)			8	pF
Input Leakage	I_{LI}				±2	µA
I/O Leakage	I_{LO}				±2	µA
Standby Current	I_{CC1}	/CS = VCC, VIN = GND or VCC		10	60	µA
Power-down Current	I_{CC2}	/CS = VCC, VIN = GND or VCC		1	20	µA
Current Read Data / Dual /Quad 50MHz(2)	I_{CC3}	C = 0.1 VCC / 0.9 VCC DO = Open		8	15	mA
Current Read Data / Dual /Quad 80MHz(2)	I_{CC3}	C = 0.1 VCC / 0.9 VCC DO = Open		10	18	mA
Current Read Data / Dual /Quad 104MHz(2)	I_{CC3}	C = 0.1 VCC / 0.9 VCC DO = Open		12	20	mA
Current Write Status Register	I_{CC4}	/CS = VCC		20	25	mA
Current Page Program	I_{CC5}	/CS = VCC		20	25	mA
Current Sector/Block Erase	I_{CC6}	/CS = VCC		20	25	mA
Current Chip Erase	I_{CC7}	/CS = VCC		20	25	mA
Input Low Voltage	V_{IL}		–0.5		VCC x 0.3	V
Input High Voltage	V_{IH}		VCC x 0.7		VCC + 0.4	V
Output Low Voltage	V_{OL}	I_{OL} = 100 µA			0.2	V
Output High Voltage	V_{OH}	I_{OH} = –100 µA	VCC – 0.2			V

Notes:

1. Tested on sample basis and specified through design and characterization data. TA = 25° C, VCC = 3.0V.
2. Checker Board Pattern.

9.5 AC Measurement Conditions

PARAMETER	SYMBOL	SPEC		UNIT
		MIN	MAX	
Load Capacitance	C_L		30	pF
Input Rise and Fall Times	T_R, T_F		5	ns
Input Pulse Voltages	V_{IN}	0.1 VCC to 0.9 VCC		V
Input Timing Reference Voltages	IN	0.3 VCC to 0.7 VCC		V
Output Timing Reference Voltages	OUT	0.5 VCC to 0.5 VCC		V

Note:

1. Output Hi-Z is defined as the point where data out is no longer driven.

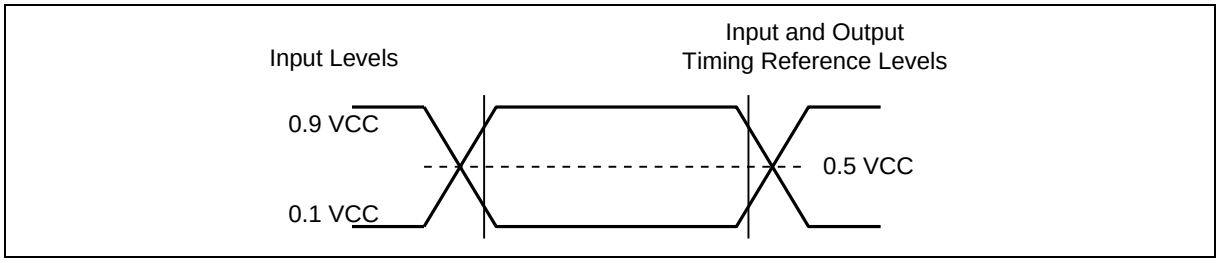

Figure 59. AC Measurement I/O Waveform

9.6 AC Electrical Characteristics(6)

DESCRIPTION	SYMBOL	ALT	SPEC			UNIT
			MIN	TYP	MAX	
Clock frequency except for Read Data (03h) & DTR instructions (3.0V-3.6V)	F_R	f_{C1}	D.C.		133	MHz
Clock frequency except for Read Data (03h) & DTR instructions(2.7V-3.0V)	F_R	f_{C1}	D.C.		104	MHz
Clock frequency DTR instructions(3.0V-3.6V)	F_R	f_{C1}	D.C.		66	MHz
Clock frequency DTR instructions (2.7V-3.0V)	F_R	f_{C1}	D.C.		52	MHz
Clock frequency for Read Data instruction (03h)	f_R		D.C.		50	MHz
Clock High, Low Time for all instructions except for Read Data (03h)	t_{CLH}, t_{CLL}(1)		45% PC			ns
Clock High, Low Time for Read Data (03h) instruction	t_{CRLH}, t_{CRLL}(1)		45% PC			ns
Clock Rise Time peak to peak	t_{CLCH}(2)		0.1			V/ns
Clock Fall Time peak to peak	t_{CHCL}(2)		0.1			V/ns
/CS Active Setup Time relative to CLK	t_{SLCH}	t_{CSS}	3			ns
/CS Not Active Hold Time relative to CLK	t_{CHSL}		3			ns
Data In Setup Time	t_{DVCH}	t_{DSU}	1			ns
Data In Hold Time	t_{CHDX}	t_{DH}	2			ns
/CS Active Hold Time relative to CLK	t_{CHSH}		3			ns
/CS Not Active Setup Time relative to CLK	t_{SHCH}		3			ns
/CS Deselect Time (for Read)	t_{SHSL1}	t_{CSH}	10			ns
/CS Deselect Time (for Erase or Program or Write)	t_{SHSL2}	t_{CSH}	50			ns
Output Disable Time	t_{SHQZ}(2)	t_{DIS}			7	ns
Clock Low to Output Valid	t_{CLQV}	t_V			6	ns
Output Hold Time	t_{CLQX}	t_{HO}	1.5			ns
/HOLD Active Setup Time relative to CLK	t_{HLCH}		5			ns
/HOLD Active Hold Time relative to CLK	t_{CHHH}		5			ns

Continued – next page AC Electrical Characteristics (cont'd)

DESCRIPTION	SYMBOL	ALT	SPEC			UNIT
			MIN	TYP	MAX	
/HOLD Not Active Setup Time relative to CLK	t_{HHCH}		5			ns
/HOLD Not Active Hold Time relative to CLK	t_{CHHL}		5			ns
/HOLD to Output Low-Z	t_{HHQX}(2)	t_{LZ}			7	ns
/HOLD to Output High-Z	t_{HLQZ}(2)	t_{HZ}			12	ns
Write Protect Setup Time Before /CS Low	t_{WHSL}(3)		20			ns
Write Protect Hold Time After /CS High	t_{SHWL}(3)		100			ns
/CS High to Power-down Mode	t_{DP}(2)				3	µs
/CS High to Standby Mode without ID Read	t_{RES1}(2)				3	µs
/CS High to Standby Mode with ID Read	t_{RES2}(2)				1.8	µs
/CS High to next Instruction after Suspend	t_{SUS}(2)				20	µs
/CS High to next Instruction after Reset	t_{RST}(2)				30	µs
/RESET pin Low period to reset the device	t_{RESET}(2)		1(4)			µs
Write Status Register Time	t_W			10	15	ms
Page Program Time	t_{PP}			0.4	3	ms
Sector Erase Time (4KB)	t_{SE}			45	400	ms
Block Erase Time (32KB)	t_{BE1}			120	1,600	ms
Block Erase Time (64KB)	t_{BE2}			150	2,000	ms
Chip Erase Time	t_{CE}			40	200	s

Notes:

1. Clock high or Clock low must be more than or equal to 45%Pc. Pc = 1/fc(max).
2. Value guaranteed by design and/or characterization, not 100% tested in production.
3. Only applicable as a constraint for a Write Status Register instruction when SRP=1.
4. It's possible to reset the device with shorter t_{RESET} (as short as a few hundred ns), a 1us minimum is recommended to ensure reliable operation.
5. Tested on sample basis and specified through design and characterization data. T_A = 25° C, VCC = 3.0V, 25% driver strength.
6. 4-bytes address alignment for QPI/Quad Read

9.7 Serial Output Timing

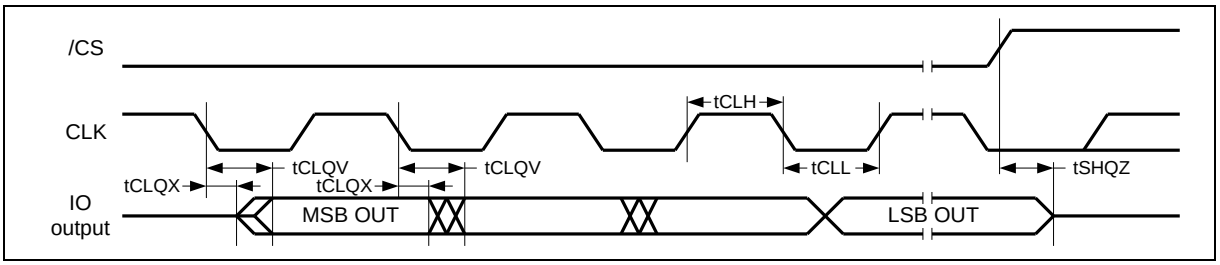

9.8 Serial Input Timing

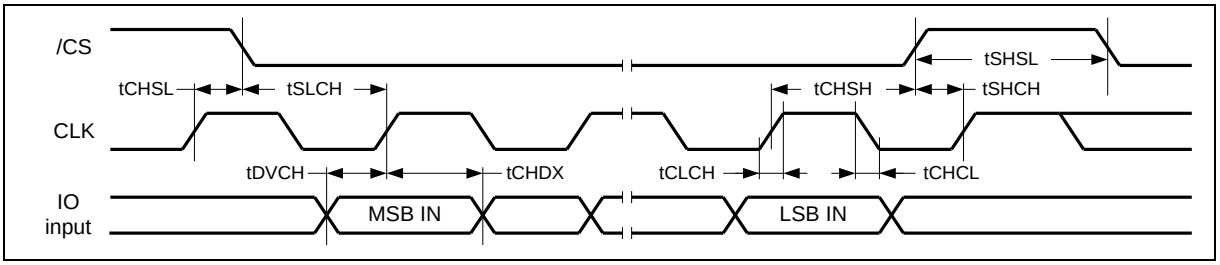

9.9 /HOLD Timing

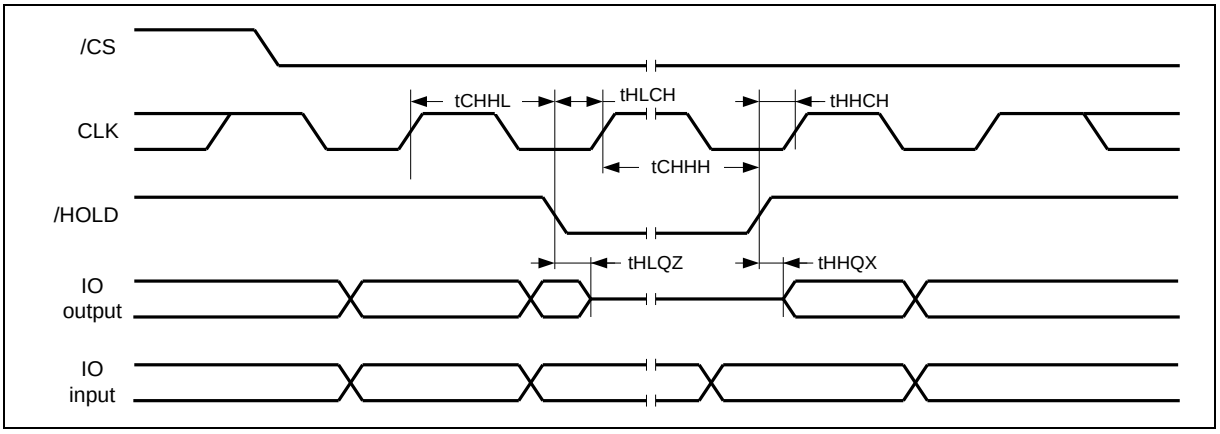

9.10 /WP Timing

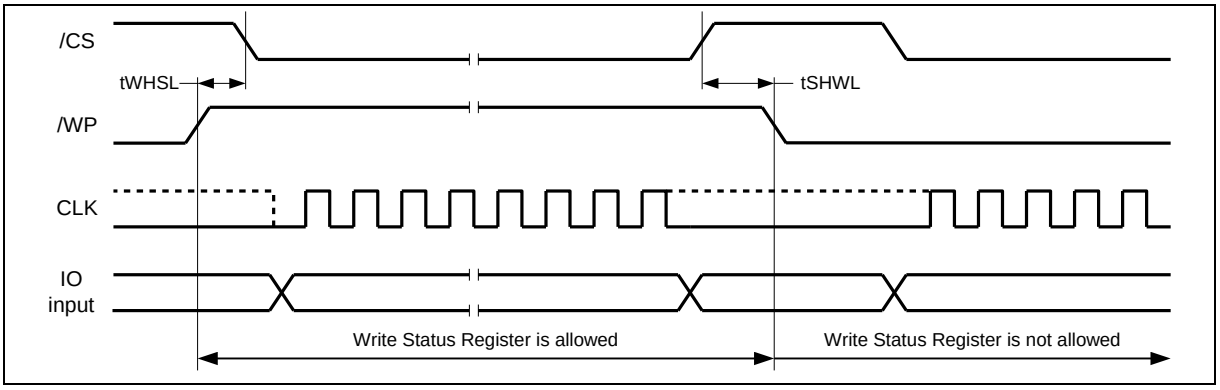

10. PACKAGE SPECIFICATIONS

10.1 8-Pin SOIC 208-mil (Package Code S)

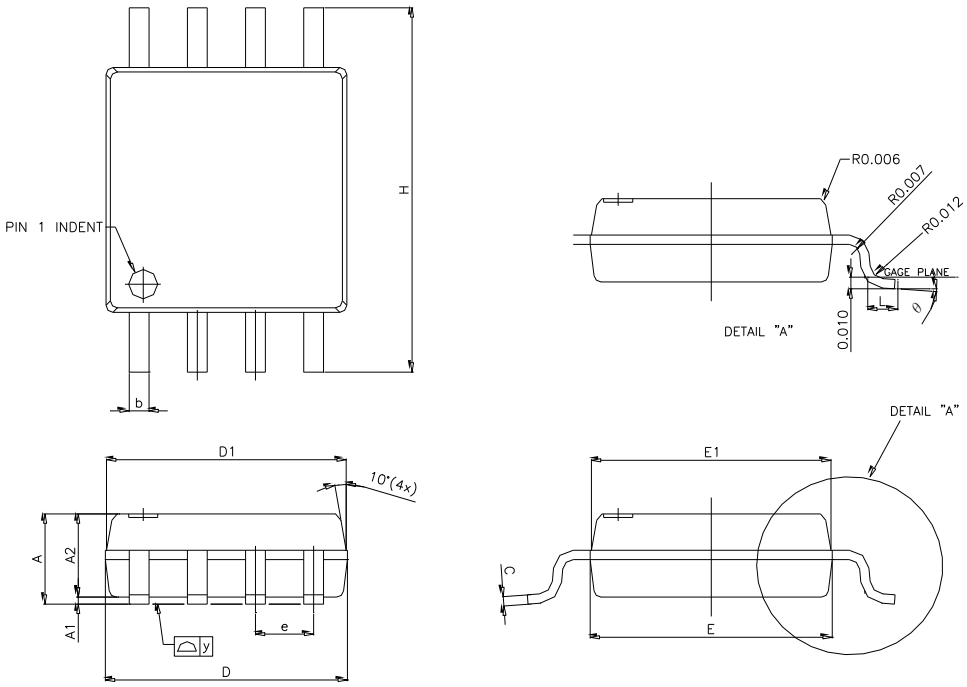

Symbol	Millimeters			Inches		
	Min	Nom	Max	Min	Nom	Max
A	1.75	1.95	2.16	0.069	0.077	0.085
A1	0.05	0.15	0.25	0.002	0.006	0.010
A2	1.70	1.80	1.91	0.067	0.071	0.075
b	0.35	0.42	0.48	0.014	0.017	0.019
C	0.19	0.20	0.25	0.007	0.008	0.010
D	5.18	5.28	5.38	0.204	0.208	0.212
D1	5.13	5.23	5.33	0.202	0.206	0.210
E	5.18	5.28	5.38	0.204	0.208	0.212
E1	5.13	5.23	5.33	0.202	0.206	0.210
e	1.27 BSC			0.050 BSC		
H	7.70	7.90	8.10	0.303	0.311	0.319
L	0.50	0.65	0.80	0.020	0.026	0.031
y	---	---	0.10	---	---	0.004
θ	0°	---	8°	0°	---	8°

10.2 8-Pad WSON 6x5-mm (Package Code P)

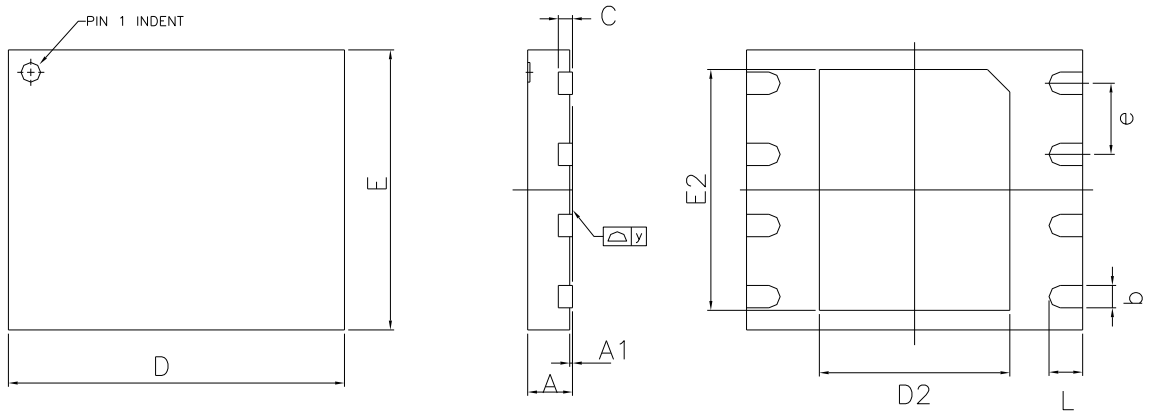

Symbol	Millimeters			Inches		
	Min	Nom	Max	Min	Nom	Max
A	0.70	0.75	0.80	0.028	0.030	0.031
A1	0.00	0.02	0.05	0.000	0.001	0.002
b	0.35	0.40	0.48	0.014	0.016	0.019
C	---	0.20 REF	---	---	0.008 REF	---
D	5.90	6.00	6.10	0.232	0.236	0.240
D2	3.35	3.40	3.45	0.132	0.134	0.136
E	4.90	5.00	5.10	0.193	0.197	0.201
E2	4.25	4.30	4.35	0.167	0.169	0.171
e	1.27 BSC			0.050 BSC		
L	0.55	0.60	0.65	0.022	0.024	0.026
y	0.00	---	0.075	0.000	---	0.003

Note:

The metal pad area on the bottom center of the package is not connected to any internal electrical signals. It can be left floating or connected to the device ground (GND pin). Avoid placement of exposed PCB vias under the pad.

10.3 8-Pad WSON 8x6-mm (Package Code E)

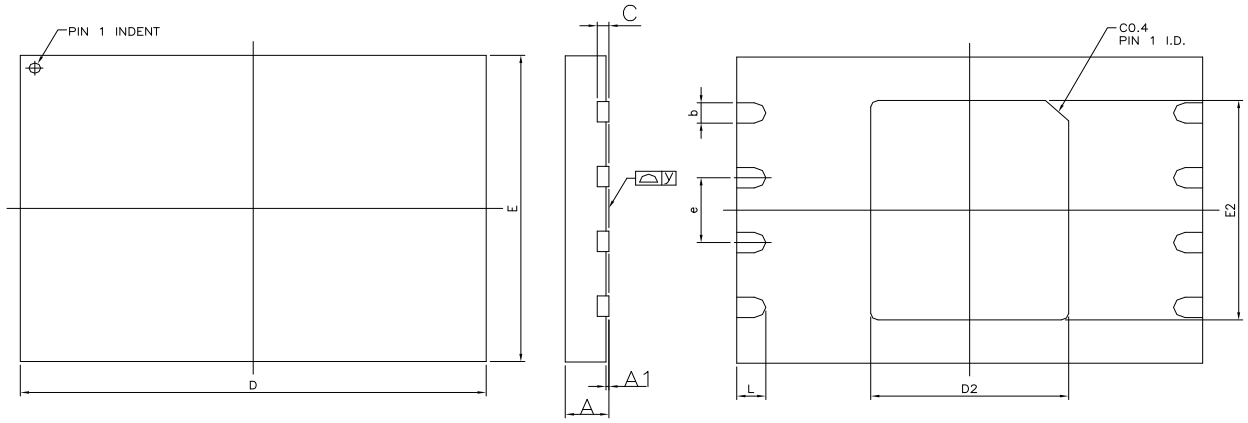

SYMBOL	MILLIMETERS			INCHES		
	Min	Nom	Max	Min	Nom	Max
A	0.70	0.75	0.80	0.028	0.030	0.031
A1	0.00	0.02	0.05	0.000	0.001	0.002
b	0.35	0.40	0.48	0.014	0.016	0.019
C	---	0.20 Ref.	---	---	0.008 Ref.	---
D	7.90	8.00	8.10	0.311	0.315	0.319
D2	3.35	3.40	3.45	0.132	0.134	0.136
E	5.90	6.00	6.10	0.232	0.236	0.240
E2	4.25	4.30	4.35	0.167	0.169	0.171
e	1.27 BSC			0.050 BSC		
L	0.45	0.50	0.55	0.018	0.020	0.022
y	0.00	---	0.05	0.000	---	0.002

Note:

The metal pad area on the bottom center of the package is not connected to any internal electrical signals. It can be left floating or connected to the device ground (GND pin). Avoid placement of exposed PCB vias under the pad.

10.4 16-Pin SOIC 300-mil (Package Code F)

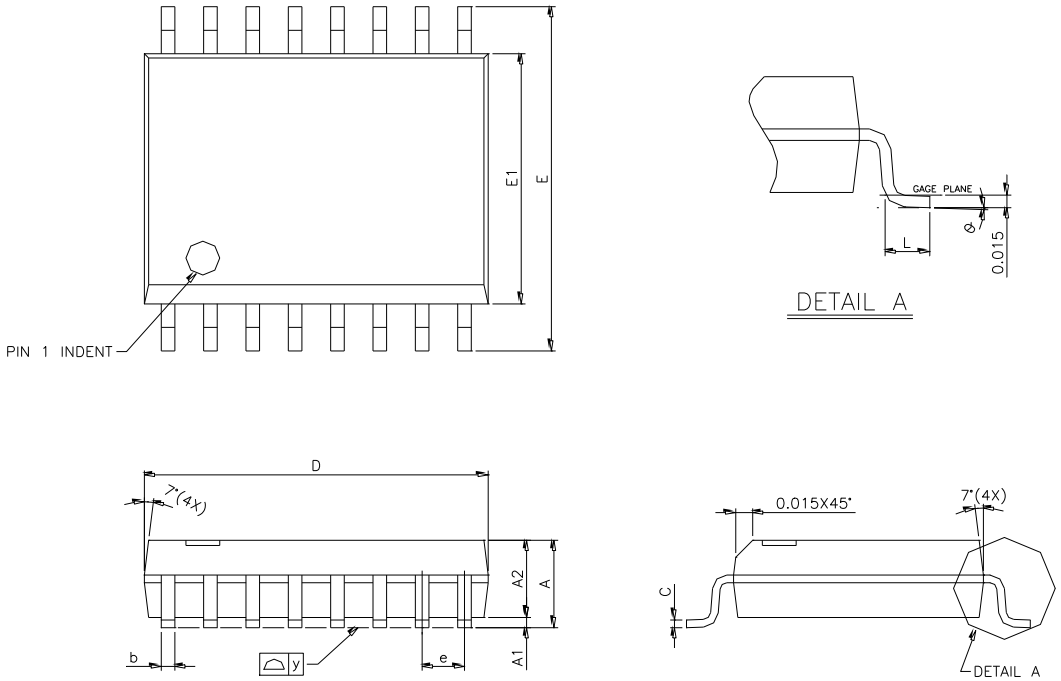

Symbol	Millimeters			Inches		
	Min	Nom	Max	Min	Nom	Max
A	2.36	2.49	2.64	0.093	0.098	0.104
A1	0.10	---	0.30	0.004	---	0.012
A2	---	2.31	---	---	0.091	---
b	0.33	0.41	0.51	0.013	0.016	0.020
C	0.18	0.23	0.28	0.007	0.009	0.011
D	10.08	10.31	10.49	0.397	0.406	0.413
E	10.01	10.31	10.64	0.394	0.406	0.419
E1	7.39	7.49	7.59	0.291	0.295	0.299
e	1.27 BSC			0.050 BSC		
L	0.38	0.81	1.27	0.015	0.032	0.050
y	---	---	0.10	---	---	0.004
θ	0°	---	8°	0°	---	8°

10.5 24-Ball TFBGA 8x6-mm (Package Code B, 5x5-1 ball array)

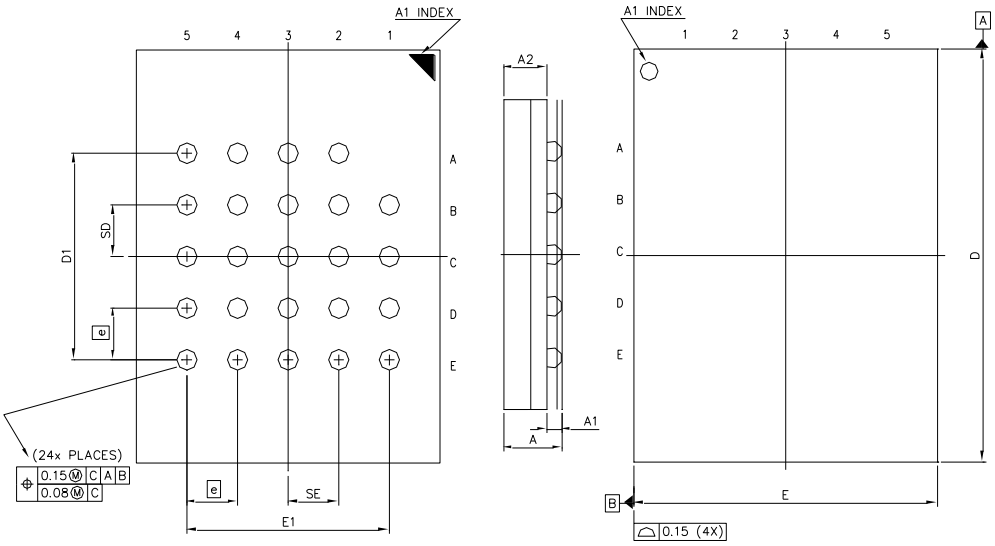

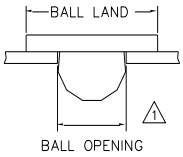

Note:

Ball land: 0.45mm. Ball Opening: 0.35mm

PCB ball land suggested <= 0.35mm

Symbol	Millimeters			Inches		
	Min	Nom	Max	Min	Nom	Max
A	---	---	1.20	---	---	0.047
A1	0.25	0.30	0.35	0.010	0.012	0.014
A2	---	0.85	---	---	0.033	---
b	0.35	0.40	0.45	0.014	0.016	0.018
D	7.90	8.00	8.10	0.311	0.315	0.319
D1	4.00 BSC			0.157 BSC		
E	5.90	6.00	6.10	0.232	0.236	0.240
E1	4.00 BSC			0.157 BSC		
SE	1.00 TYP			0.039 TYP		
SD	1.00 TYP			0.039 TYP		
e	1.00 BSC			0.039 BSC		

10.6 24-Ball TFBGA 8x6-mm (Package Code C, 6x4 ball array)

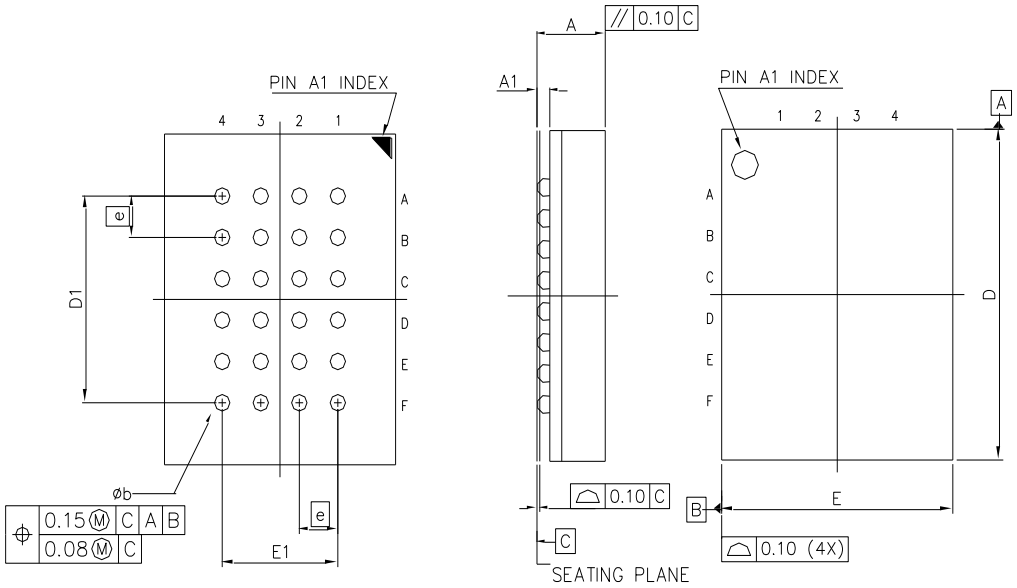

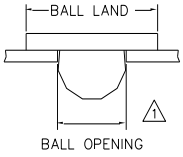

Note:

Ball land: 0.45mm. Ball Opening: 0.35mm

PCB ball land suggested <= 0.35mm

Symbol	Millimeters			Inches		
	Min	Nom	Max	Min	Nom	Max
A	---	---	1.20	---	---	0.047
A1	0.25	0.30	0.35	0.010	0.012	0.014
b	0.35	0.40	0.45	0.014	0.016	0.018
D	7.95	8.00	8.05	0.313	0.315	0.317
D1	5.00 BSC			0.197 BSC		
E	5.95	6.00	6.05	0.234	0.236	0.238
E1	3.00 BSC			0.118 BSC		
e	1.00 BSC			0.039 BSC		

11. ORDERING INFORMATION

W(1) 25Q 128J V xx(2) I x

Company Prefix

W = Winbond

Product Family

25Q = SpiFlash Serial Flash Memory with 4KB sectors, Dual/Quad I/O

Product Number / Density

128J = 128M-bit

Supply Voltage

V = 2.7V to 3.6V

Package Type

S = 8-pin SOIC 208-mil
E = WSON8 8x6-mm
F = 16-pin SOIC 300-mil
B = TFBGA 8x6-mm (5x5-1 ball array)
P = WSON8 6x5-mm
C = TFBGA 8x6-mm (6x4 ball array)

Temperature Range

I = Industrial (-40°C to +85°C)
J = Industrial Plus (-40°C to +105°C)

Special Options (3,4)

M = Green Package (Lead-free, RoHS Compliant, Halogen-free (TBBA), Antimony-Oxide-free Sb_2O_3) & Optimized for mobile applications

Notes:

1. The “W” prefix is not included on the part marking.
2. Only the 2nd letter is used for the part marking; WSON package type ZP & ZE are not used for the part marking.
3. Standard bulk shipments are in Tube (shape E). Please specify alternate packing method, such as Tape and Reel (shape T) or Tray (shape S), when placing orders.
4. For shipments with OTP feature, please contact Winbond for details.

11.1 Valid Part Numbers and Top Side Marking

The following table provides the valid part numbers for the W25Q128JV SpiFlash Memory. Please contact Winbond for specific availability by density and package type. Winbond SpiFlash memories use a 12-digit Product Number for ordering. However, due to limited space, the Top Side Marking on all packages uses an abbreviated 10-digit number.

PACKAGE TYPE	DENSITY	PRODUCT NUMBER	TOP SIDE MARKING
S SOIC-8 208-mil	128M-bit	W25Q128JVSJM W25Q128JVSIM	Q128JVSJM 25Q128JVSM
F SOIC-16 300-mil	128M-bit	W25Q128JVFJM W25Q128JVFIM	Q128JVFJM 25Q128JVFM
P WSON-8 6x5-mm	128M-bit	W25Q128JVPJM W25Q128JVPIM	Q128JVPJM 25Q128JVPM
E WSON-8 8x6-mm	128M-bit	W25Q128JVEJM W25Q128JVEIM	Q128JVEJM 25Q128JVEM
B(1) TFBGA-24 8x6-mm (5x5 Ball Array)	128M-bit	W25Q128JVBJM W25Q128JVBIM	Q128JVBJM 25Q128JVBM
C(1) TFBGA-24 8x6-mm (6x4 Ball Array)	128M-bit	W25Q128JVCJM W25Q128JVCIM	Q128JVCJM 25Q128JVCM

Note:

1. These package types are special order, please contact Winbond for more information.

12. REVISION HISTORY

VERSION	DATE	PAGE	DESCRIPTION
A	01/12/2015		New Create Datasheet
B	11/04/2016		Removed “preliminary”
C	03/27/2018	87,89-90 4,98-99	Updated ICC3, tPP, tSLCH, tCHSL, tDVCH, tCHDX Added industrial plus information.

Trademarks

Winbond and *SpiFlash* are trademarks of *Winbond Electronics Corporation.*
All other marks are the property of their respective owner.

Important Notice

Winbond products are not designed, intended, authorized or warranted for use as components in systems or equipment intended for surgical implantation, atomic energy control instruments, airplane or spaceship instruments, transportation instruments, traffic signal instruments, combustion control instruments, or for other applications intended to support or sustain life. Furthermore, *Winbond* products are not intended for applications wherein failure of *Winbond* products could result or lead to a situation wherein personal injury, death or severe property or environmental damage could occur. *Winbond* customers using or selling these products for use in such applications do so at their own risk and agree to fully indemnify *Winbond* for any damages resulting from such improper use or sales.

Information in this document is provided solely in connection with Winbond products. Winbond reserves the right to make changes, corrections, modifications or improvements to this document and the products and services described herein at any time, without notice.

Please note that all data and specifications are subject to change without notice.
All the trademarks of products and companies mentioned in this datasheet belong to their respective owners.

Общество с ограниченной ответственностью «МосЧип» ИНН 7719860671 / КПП 771901001
Адрес: 105318, г.Москва, ул.Щербаковская д.3, офис 1107

Данный компонент на территории Российской Федерации

Вы можете приобрести в компании MosChip.

Для оперативного оформления запроса Вам необходимо перейти по данной ссылке:

http://moschip.ru/get-element

Вы можете разместить у нас заказ для любого Вашего проекта, будь то серийное производство или разработка единичного прибора.

В нашем ассортименте представлены ведущие мировые производители активных и пассивных электронных компонентов.

Нашей специализацией является поставка электронной компонентной базы двойного назначения, продукции таких производителей как XILINX, Intel (ex.ALTERA), Vicor, Microchip, Texas Instruments, Analog Devices, Mini-Circuits, Amphenol, Glenair.

Сотрудничество с глобальными дистрибьюторами электронных компонентов, предоставляет возможность заказывать и получать с международных складов практически любой перечень компонентов в оптимальные для Вас сроки.

На всех этапах разработки и производства наши партнеры могут получить квалифицированную поддержку опытных инженеров.

Система менеджмента качества компании отвечает требованиям в соответствии с ГОСТ Р ИСО 9001, ГОСТ РВ 0015-002 и ЭС РД 009

Офис по работе с юридическими лицами:

105318, г.Москва, ул.Щербаковская д.3, офис 1107, 1118, ДЦ «Щербаковский»

Телефон: +7 495 668-12-70 (многоканальный)

Факс: +7 495 668-12-70 (доб.304)

E-mail: info@moschip.ru

Skype отдела продаж:
moschip.ru
moschip.ru_4
moschip.ru_6
moschip.ru_9