SX Family FPGAs

Leading Edge Performance

- 320 MHz Internal Performance
- 3.7 ns Clock-to-Out (Pin-to-Pin)
- 0.1 ns Input Setup
- 0.25 ns Clock Skew

Specifications

- 12,000 to 48,000 System Gates
- Up to 249 User-Programmable I/O Pins
- Up to 1,080 Flip-Flops
- 0.35 µ CMOS

Features

- 66 MHz PCI
- CPLD and FPGA Integration
- Single-Chip Solution
- 100% Resource Utilization with 100% Pin Locking
- 3.3 V and 5.0 V Operation with 5.0 V Input Tolerance
- Very Low Power Consumption
- Deterministic, User-Controllable Timing
- Unique In-System Diagnostic and Debug Capability with Silicon Explorer II
- Boundary Scan Testing in Compliance with IEEE Standard 1149.1 (JTAG)
- Secure Programming Technology Prevents Reverse Engineering and Design Theft

SX Product Profile

Device	A54SX08	A54SX16	A54SX16P	A54SX32
Capacity				
Typical Gates	8,000	16,000	16,000	32,000
System Gates	12,000	24,000	24,000	48,000
Logic Modules	768	1,452	1,452	2,880
Combinatorial Cells	512	924	924	1,800
Register Cells (Dedicated Flip-Flops)	256	528	528	1,080
Maximum User I/Os	130	175	175	249
Clocks	3	3	3	3
JTAG	Yes	Yes	Yes	Yes
PCI	–	–	Yes	–
Clock-to-Out	3.7 ns	3.9 ns	4.4 ns	4.6 ns
Input Setup (external)	0.8 ns	0.5 ns	0.5 ns	0.1 ns
Speed Grades	Std, –1, –2, –3	Std, –1, –2, –3	Std, –1, –2, –3	Std, –1, –2, –3
Temperature Grades	C, I, M	C, I, M	C, I, M	C, I, M
Packages (by pin count)				
PLCC	84	–	–	–
PQFP	208	208	208	208
VQFP	100	100	100	–
TQFP	144, 176	176	144, 176	144, 176
PBGA	–	–	–	313, 329
FBGA	144	–	–	–

© 2006 Actel Corporation

Ordering Information

A54SX16 – P 2 PQ G 208

Application (Temperature Range)
Blank = Commercial (0 to +70°C)
I = Industrial (–40 to +85°C)
M = Military (–55 to +125°C)
PP = Pre-production

Package Lead Count

Lead-Free Packaging
Blank = Standard Packaging
G = RoHS Compliant Packaging

Package Type
BG = Ball Grid Array
PL = Plastic Leaded Chip Carrier
PQ = Plastic Quad Flat Pack
TQ = Thin (1.4 mm) Quad Flat Pack
VQ = Very Thin (1.0 mm) Quad Flat Pack
FG = Fine Pitch Ball Grid Array (1.0 mm)

Speed Grade
Blank = Standard Speed
–1 = Approximately 15% Faster than Standard
–2 = Approximately 25% Faster than Standard
–3 = Approximately 35% Faster than Standard

Blank = Not PCI Compliant
P = PCI Compliant

Part Number
A54SX08 = 12,000 System Gates
A54SX16 = 24,000 System Gates
A54SX16P = 24,000 System Gates
A54SX32 = 48,000 System Gates

Plastic Device Resources

Device	User I/Os (including clock buffers)							
	PLCC 84-Pin	VQFP 100-Pin	PQFP 208-Pin	TQFP 144-Pin	TQFP 176-Pin	PBGA 313-Pin	PBGA 329-Pin	FBGA 144-Pin
A54SX08	69	81	130	113	128	–	–	111
A54SX16	–	81	175	–	147	–	–	–
A54SX16P	–	81	175	113	147	–	–	–
A54SX32	–	–	174	113	147	249	249	–

Note: *Package Definitions (Consult your local Actel sales representative for product availability):*
PLCC = Plastic Leaded Chip Carrier
PQFP = Plastic Quad Flat Pack
TQFP = Thin Quad Flat Pack
VQFP = Very Thin Quad Flat Pack
PBGA = Plastic Ball Grid Array
FBGA = Fine Pitch (1.0 mm) Ball Grid Array

Table of Contents

SX Family FPGAs

General Description 1-1
SX Family Architecture 1-1
Programming 1-7
3.3 V / 5 V Operating Conditions 1-7
PCI Compliance for the SX Family 1-9
A54SX16P AC Specifications for (PCI Operation) 1-10
A54SX16P DC Specifications (3.3 V PCI Operation) 1-12
A54SX16P AC Specifications (3.3 V PCI Operation) 1-13
Power-Up Sequencing 1-15
Power-Down Sequencing 1-15
Evaluating Power in SX Devices 1-16
SX Timing Model 1-21
Timing Characteristics 1-23

Package Pin Assignments

84-Pin PLCC 2-1
208-Pin PQFP 2-3
144-Pin TQFP 2-7
176-Pin TQFP 2-10
100-Pin VQFP 2-14
313-Pin PBGA 2-16
329-Pin PBGA 2-19
144-Pin FBGA 2-23

Datasheet Information

List of Changes 3-1
Datasheet Categories 3-1
International Traffic in Arms Regulations (ITAR) and Export Administration Regulations (EAR) 3-1

SX Family FPGAs

General Description

The Actel SX family of FPGAs features a sea-of-modules architecture that delivers device performance and integration levels not currently achieved by any other FPGA architecture. SX devices greatly simplify design time, enable dramatic reductions in design costs and power consumption, and further decrease time to market for performance-intensive applications.

The Actel SX architecture features two types of logic modules, the combinatorial cell (C-cell) and the register cell (R-cell), each optimized for fast and efficient mapping of synthesized logic functions. The routing and interconnect resources are in the metal layers above the logic modules, providing optimal use of silicon. This enables the entire floor of the device to be spanned with an uninterrupted grid of fine-grained, synthesis-friendly logic modules (or "sea-of-modules"), which reduces the distance signals have to travel between logic modules. To minimize signal propagation delay, SX devices employ both local and general routing resources. The high-speed local routing resources (DirectConnect and FastConnect) enable very fast local signal propagation that is optimal for fast counters, state machines, and datapath logic. The general system of segmented routing tracks allows any logic module in the array to be connected to any other logic or I/O module. Within this system, propagation delay is minimized by limiting the number of antifuse interconnect elements to five (90 percent of connections typically use only three antifuses). The unique local and general routing structure featured in SX devices gives fast and predictable performance, allows 100 percent pin-locking with full logic utilization, enables concurrent PCB development, reduces design time, and allows designers to achieve performance goals with minimum effort.

Further complementing SX's flexible routing structure is a hardwired, constantly loaded clock network that has been tuned to provide fast clock propagation with minimal clock skew. Additionally, the high performance of the internal logic has eliminated the need to embed latches or flip-flops in the I/O cells to achieve fast clock-to-out or fast input setup times. SX devices have easy to use I/O cells that do not require HDL instantiation, facilitating design reuse and reducing design and verification time.

SX Family Architecture

The SX family architecture was designed to satisfy next-generation performance and integration requirements for production-volume designs in a broad range of applications.

Programmable Interconnect Element

The SX family provides efficient use of silicon by locating the routing interconnect resources between the Metal 2 (M2) and Metal 3 (M3) layers (Figure 1-1 on page 1-2). This completely eliminates the channels of routing and interconnect resources between logic modules (as implemented on SRAM FPGAs and previous generations of antifuse FPGAs), and enables the entire floor of the device to be spanned with an uninterrupted grid of logic modules.

Interconnection between these logic modules is achieved using The Actel patented metal-to-metal programmable antifuse interconnect elements, which are embedded between the M2 and M3 layers. The antifuses are normally open circuit and, when programmed, form a permanent low-impedance connection.

The extremely small size of these interconnect elements gives the SX family abundant routing resources and provides excellent protection against design pirating. Reverse engineering is virtually impossible because it is extremely difficult to distinguish between programmed and unprogrammed antifuses, and there is no configuration bitstream to intercept.

Additionally, the interconnect elements (i.e., the antifuses and metal tracks) have lower capacitance and lower resistance than any other device of similar capacity, leading to the fastest signal propagation in the industry.

Logic Module Design

The SX family architecture is described as a "sea-of-modules" architecture because the entire floor of the device is covered with a grid of logic modules with virtually no chip area lost to interconnect elements or routing. The Actel SX family provides two types of logic modules, the register cell (R-cell) and the combinatorial cell (C-cell).

The R-cell contains a flip-flop featuring asynchronous clear, asynchronous preset, and clock enable (using the S0 and S1 lines) control signals (Figure 1-2). The R-cell registers feature programmable clock polarity selectable on a register-by-register basis. This provides additional flexibility while allowing mapping of synthesized functions into the SX FPGA. The clock source for the R-cell can be chosen from either the hardwired clock or the routed clock.

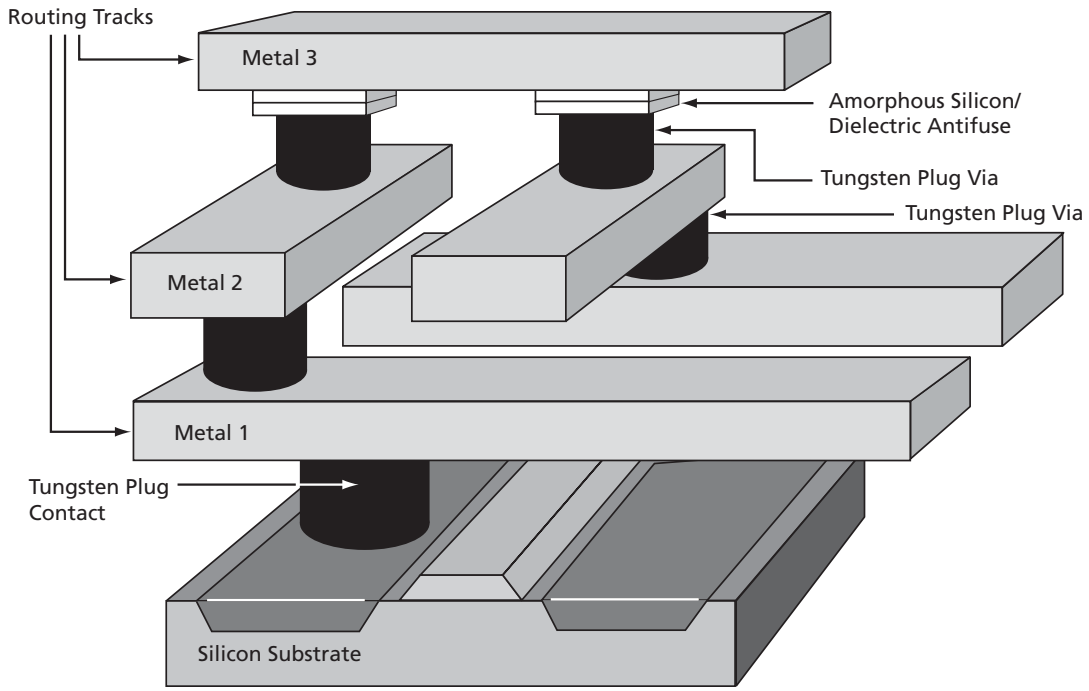

Figure 1-1 • **SX Family Interconnect Elements**

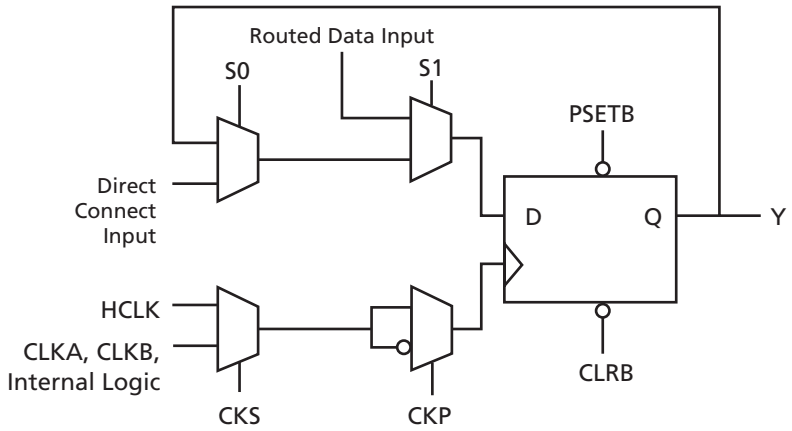

Figure 1-2 • **R-Cell**

The C-cell implements a range of combinatorial functions up to 5-inputs (Figure 1-3 on page 1-3). Inclusion of the DB input and its associated inverter function dramatically increases the number of combinatorial functions that can be implemented in a single module from 800 options in previous architectures to more than 4,000 in the SX architecture. An example of the improved flexibility enabled by the inversion capability is the ability to integrate a 3-input exclusive-OR function into a single C-cell. This facilitates construction of 9-bit parity-tree functions with 2 ns propagation delays. At the same time, the C-cell structure is extremely synthesis friendly, simplifying the overall design and reducing synthesis time.

Chip Architecture

The SX family chip architecture provides a unique approach to module organization and chip routing that delivers the best register/logic mix for a wide variety of new and emerging applications.

Module Organization

Actel has arranged all C-cell and R-cell logic modules into horizontal banks called *clusters*. There are two types of *clusters*: Type 1 contains two C-cells and one R-cell, while Type 2 contains one C-cell and two R-cells.

To increase design efficiency and device performance, Actel has further organized these modules into *SuperClusters* (Figure 1-4). SuperCluster 1 is a two-wide grouping of Type 1 clusters. SuperCluster 2 is a two-wide group containing one Type 1 cluster and one Type 2 cluster. SX devices feature more SuperCluster 1 modules than SuperCluster 2 modules because designers typically require significantly more combinatorial logic than flip-flops.

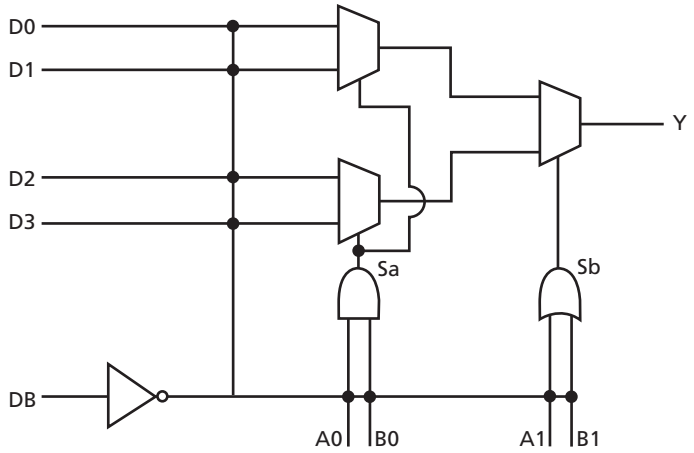

Figure 1-3 • **C-Cell**

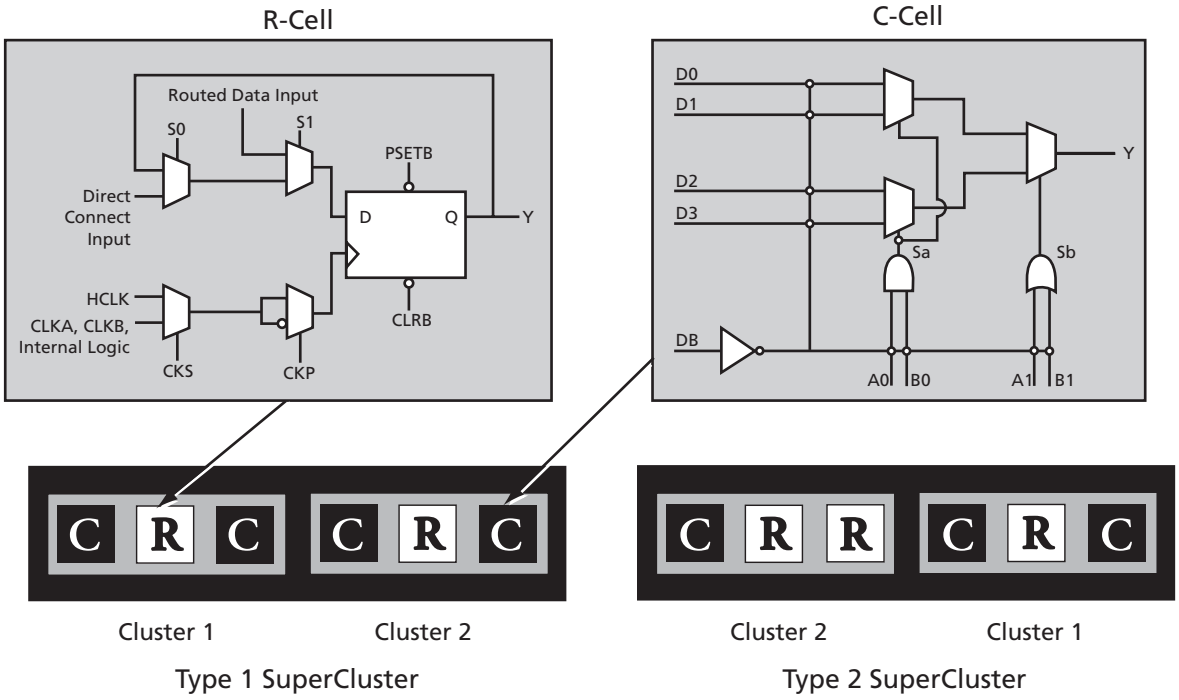

Figure 1-4 • **Cluster Organization**

Routing Resources

Clusters and SuperClusters can be connected through the use of two innovative local routing resources called *FastConnect* and *DirectConnect,* which enable extremely fast and predictable interconnection of modules within clusters and SuperClusters (Figure 1-5 and Figure 1-6). This routing architecture also dramatically reduces the number of antifuses required to complete a circuit, ensuring the highest possible performance.

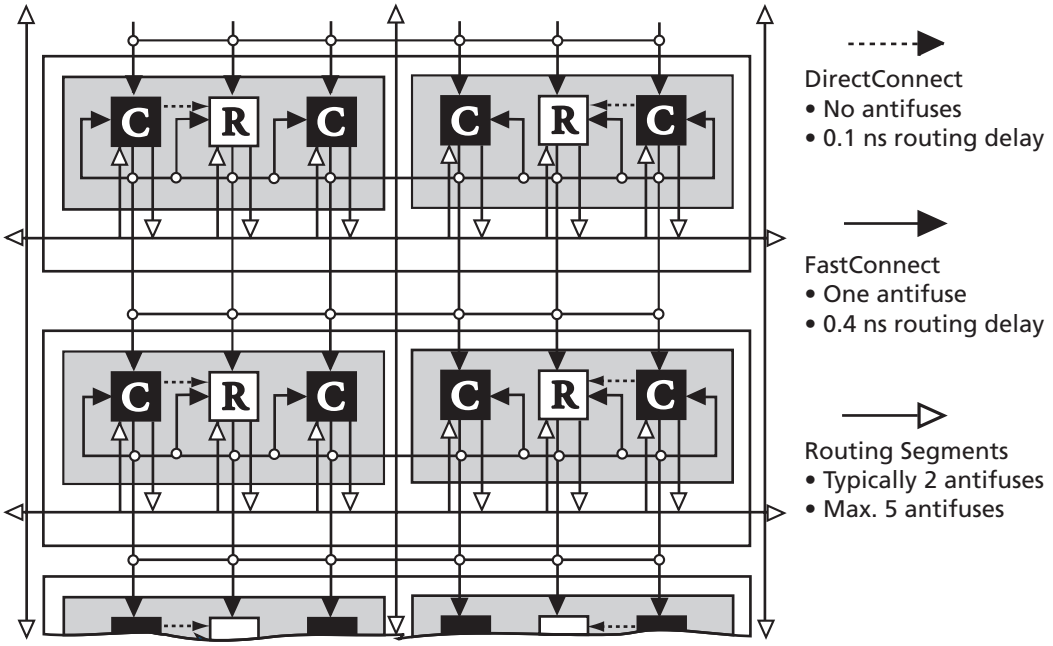

Figure 1-5 • **DirectConnect and FastConnect for Type 1 SuperClusters**

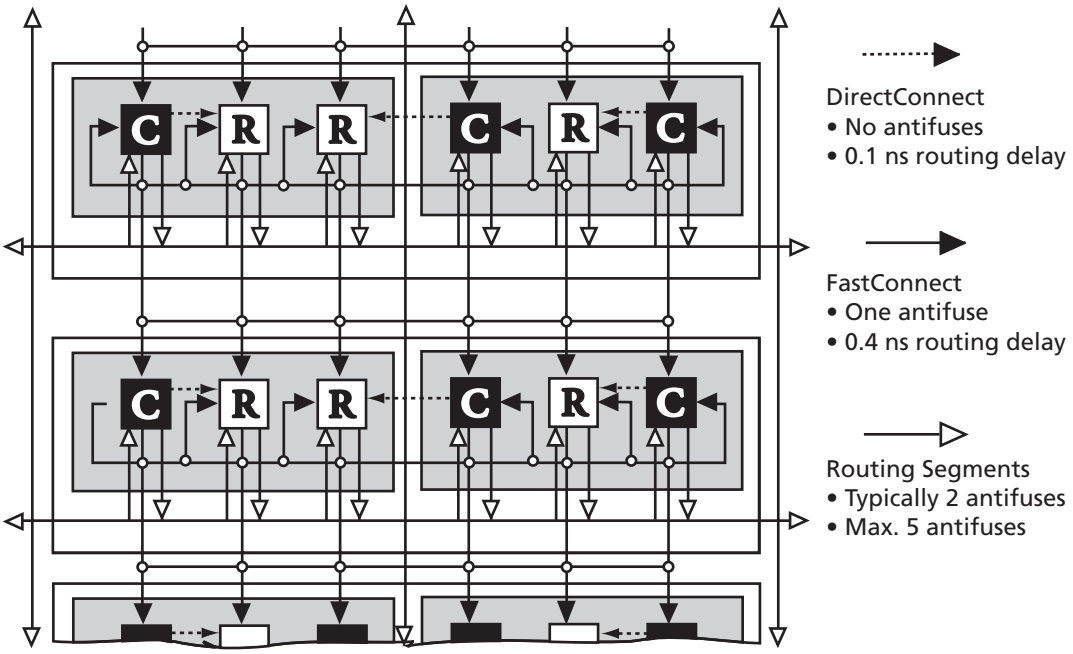

Figure 1-6 • **DirectConnect and FastConnect for Type 2 SuperClusters**

DirectConnect is a horizontal routing resource that provides connections from a C-cell to its neighboring R-cell in a given SuperCluster. DirectConnect uses a hardwired signal path requiring no programmable interconnection to achieve its fast signal propagation time of less than 0.1 ns.

FastConnect enables horizontal routing between any two logic modules within a given SuperCluster and vertical routing with the SuperCluster immediately below it. Only one programmable connection is used in a FastConnect path, delivering maximum pin-to-pin propagation of 0.4 ns.

In addition to DirectConnect and FastConnect, the architecture makes use of two globally oriented routing resources known as segmented routing and high-drive routing. The Actel segmented routing structure provides a variety of track lengths for extremely fast routing between SuperClusters. The exact combination of track lengths and antifuses within each path is chosen by the 100 percent automatic place-and-route software to minimize signal propagation delays.

The Actel high-drive routing structure provides three clock networks. The first clock, called HCLK, is hardwired from the HCLK buffer to the clock select multiplexer (MUX) in each R-cell. This provides a fast propagation path for the clock signal, enabling the 3.7 ns clock-to-out (pin-to-pin) performance of the SX devices. The hardwired clock is tuned to provide clock skew as low as 0.25 ns. The remaining two clocks (CLKA, CLKB) are global clocks that can be sourced from external pins or from internal logic signals within the SX device.

Other Architectural Features

Technology

The Actel SX family is implemented on a high-voltage twin-well CMOS process using 0.35 µ design rules. The metal-to-metal antifuse is made up of a combination of amorphous silicon and dielectric material with barrier metals and has a programmed ("on" state) resistance of 25 Ω with a capacitance of 1.0 fF for low signal impedance.

Performance

The combination of architectural features described above enables SX devices to operate with internal clock frequencies exceeding 300 MHz, enabling very fast execution of even complex logic functions. Thus, the SX family is an optimal platform upon which to integrate the functionality previously contained in multiple CPLDs. In addition, designs that previously would have required a gate array to meet performance goals can now be integrated into an SX device with dramatic improvements in cost and time to market. Using timing-driven place-and-route tools, designers can achieve highly deterministic device performance. With SX devices, designers do not need to use complicated performance-enhancing design techniques such as the use of redundant logic to reduce fanout on critical nets or the instantiation of macros in HDL code to achieve high performance.

I/O Modules

Each I/O on an SX device can be configured as an input, an output, a tristate output, or a bidirectional pin.

Even without the inclusion of dedicated I/O registers, these I/Os, in combination with array registers, can achieve clock-to-out (pad-to-pad) timing as fast as 3.7 ns. I/O cells that have embedded latches and flip-flops require instantiation in HDL code; this is a design complication not encountered in SX FPGAs. Fast pin-to-pin timing ensures that the device will have little trouble interfacing with any other device in the system, which in turn enables parallel design of system components and reduces overall design time.

Power Requirements

The SX family supports 3.3 V operation and is designed to tolerate 5.0 V inputs. (Table 1-1). Power consumption is extremely low due to the very short distances signals are required to travel to complete a circuit. Power requirements are further reduced because of the small number of low-resistance antifuses in the path. The antifuse architecture does not require active circuitry to hold a charge (as do SRAM or EPROM), making it the lowest power architecture on the market.

Table 1-1 • **Supply Voltages**

Device	V_{CCA}	V_{CCI}	V_{CCR}	Maximum Input Tolerance	Maximum Output Drive
A54SX08 A54SX16 A54SX32	3.3 V	3.3 V	5.0 V	5.0 V	3.3 V
A54SX16-P*	3.3 V	3.3 V	3.3 V	3.3 V	3.3 V
	3.3 V	3.3 V	5.0 V	5.0 V	3.3 V
	3.3 V	5.0 V	5.0 V	5.0 V	5.0 V

Note: **A54SX16-P has three different entries because it is capable of both a 3.3 V and a 5.0 V drive.*

Boundary Scan Testing (BST)

All SX devices are IEEE 1149.1 compliant. SX devices offer superior diagnostic and testing capabilities by providing Boundary Scan Testing (BST) and probing capabilities. These functions are controlled through the special test pins in conjunction with the program fuse. The functionality of each pin is described in Table 1-2. In the dedicated test mode, TCK, TDI, and TDO are dedicated pins and cannot be used as regular I/Os. In flexible mode, TMS should be set HIGH through a pull-up resistor of 10 kΩ. TMS can be pulled LOW to initiate the test sequence.

The program fuse determines whether the device is in dedicated or flexible mode. The default (fuse not blown) is flexible mode.

Table 1-2 • **Boundary Scan Pin Functionality**

Program Fuse Blown (Dedicated Test Mode)	Program Fuse Not Blown (Flexible Mode)
TCK, TDI, TDO are dedicated BST pins.	TCK, TDI, TDO are flexible and may be used as I/Os.
No need for pull-up resistor for TMS	Use a pull-up resistor of 10 kΩ on TMS.

Dedicated Test Mode

In Dedicated mode, all JTAG pins are reserved for BST; designers cannot use them as regular I/Os. An internal pull-up resistor is automatically enabled on both TMS and TDI pins, and the TMS pin will function as defined in the IEEE 1149.1 (JTAG) specification.

To select Dedicated mode, users need to reserve the JTAG pins in Actel's Designer software by checking the "Reserve JTAG" box in "Device Selection Wizard" (Figure 1-7). JTAG pins comply with LVTTL/TTL I/O specification regardless of whether they are used as a user I/O or a JTAG I/O. Refer to the Table 1-5 on page 1-8 for detailed specifications.

Figure 1-7 • **Device Selection Wizard**

Development Tool Support

The SX family of FPGAs is fully supported by both the Actel Libero® Integrated Design Environment (IDE) and Designer FPGA Development software. Actel Libero IDE is a design management environment, seamlessly integrating design tools while guiding the user through the design flow, managing all design and log files, and passing necessary design data among tools. Libero IDE allows users to integrate both schematic and HDL synthesis into a single flow and verify the entire design in a single environment. Libero IDE includes Synplify® for Actel from Synplicity®, ViewDraw® for Actel from Mentor Graphics®, Model*Sim*® HDL Simulator from Mentor Graphics, WaveFormer Lite™ from SynaptiCAD™, and Designer software from Actel. Refer to the Libero IDE flow diagram (located on the Actel website) for more information.

Actel Designer software is a place-and-route tool and provides a comprehensive suite of backend support tools for FPGA development. The Designer software includes timing-driven place-and-route, and a world-class integrated static timing analyzer and constraints editor. With the Designer software, a user can select and lock package pins while only minimally impacting the results of place-and-route. Additionally, the back-annotation flow is compatible with all the major simulators, and the simulation results can be cross-probed with Silicon Explorer II, Actel integrated verification and logic analysis tool. Another tool included in the Designer software is the SmartGen core generator, which easily creates popular and commonly used logic functions for implementation into your schematic or HDL design. Actel Designer software is compatible with the most popular FPGA design entry and verification tools from companies such as Mentor Graphics, Synplicity, Synopsys®, and Cadence® Design Systems. The Designer software is available for both the Windows® and UNIX® operating systems.

Probe Circuit Control Pins

The Silicon Explorer II tool uses the boundary scan ports (TDI, TCK, TMS, and TDO) to select the desired nets for verification. The selected internal nets are assigned to the PRA/PRB pins for observation. Figure 1-8 on page 1-7 illustrates the interconnection between Silicon Explorer II and the FPGA to perform in-circuit verification.

Design Considerations

The TDI, TCK, TDO, PRA, and PRB pins should not be used as input or bidirectional ports. Because these pins are active during probing, critical signals input through these pins are not available while probing. In addition, the Security Fuse should not be programmed because doing so disables the Probe Circuitry.

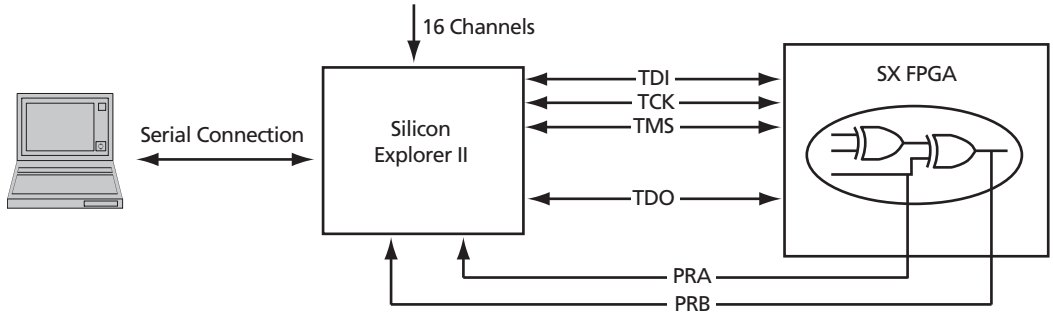

Figure 1-8 • **Probe Setup**

Programming

Device programming is supported through Silicon Sculptor series of programmers. In particular, Silicon Sculptor II are compact, robust, single-site and multi-site device programmer for the PC.

With standalone software, Silicon Sculptor II allows concurrent programming of multiple units from the same PC, ensuring the fastest programming times possible. Each fuse is subsequently verified by Silicon Sculptor II to insure correct programming. In addition, integrity tests ensure that no extra fuses are programmed. Silicon Sculptor II also provides extensive hardware self-testing capability.

The procedure for programming an SX device using Silicon Sculptor II are as follows:

1. Load the .AFM file
2. Select the device to be programmed
3. Begin programming

When the design is ready to go to production, Actel offers device volume-programming services either through distribution partners or via in-house programming from the factory.

For more details on programming SX devices, refer to the *Programming Antifuse Devices* application note and the *Silicon Sculptor II User's Guide*.

3.3 V / 5 V Operating Conditions

Table 1-3 • **Absolute Maximum Ratings[1]**

Symbol	Parameter	Limits	Units
V_{CCR}[2]	DC Supply Voltage[3]	–0.3 to + 6.0	V
V_{CCA}[2]	DC Supply Voltage	–0.3 to + 4.0	V
V_{CCI}[2]	DC Supply Voltage (A54SX08, A54SX16, A54SX32)	–0.3 to + 4.0	V
V_{CCI}[2]	DC Supply Voltage (A54SX16P)	–0.3 to + 6.0	V
V_I	Input Voltage	–0.5 to + 5.5	V
V_O	Output Voltage	–0.5 to + 3.6	V
I_{IO}	I/O Source Sink Current[3]	–30 to + 5.0	mA
T_{STG}	Storage Temperature	–65 to +150	°C

Notes:

1. *Stresses beyond those listed under "Absolute Maximum Ratings" may cause permanent damage to the device. Exposure to absolute maximum rated conditions for extended periods may affect device reliability. Device should not be operated outside the Recommended Operating Conditions.*
2. *V_{CCR} in the A54SX16P must be greater than or equal to V_{CCI} during power-up and power-down sequences and during normal operation.*
3. *Device inputs are normally high impedance and draw extremely low current. However, when input voltage is greater than V_{CC} + 0.5 V or less than GND – 0.5 V, the internal protection diodes will forward-bias and can draw excessive current.*

Table 1-4 • **Recommended Operating Conditions**

Parameter	Commercial	Industrial	Military	Units
Temperature Range*	0 to + 70	–40 to + 85	–55 to +125	°C
3.3 V Power Supply Tolerance	±10	±10	±10	$\%V_{CC}$
5.0 V Power Supply Tolerance	±5	±10	±10	$\%V_{CC}$

Note: **Ambient temperature (T_A) is used for commercial and industrial; case temperature (T_C) is used for military.*

Table 1-5 • **Electrical Specifications**

		Commercial		Industrial		
Symbol	**Parameter**	**Min.**	**Max.**	**Min.**	**Max.**	**Units**
V_{OH}	(I_{OH} = –20 µA) (CMOS) (I_{OH} = –8 mA) (TTL) (I_{OH} = –6 mA) (TTL)	(V_{CCI} – 0.1) 2.4	V_{CCI} V_{CCI}	(V_{CCI} – 0.1) 2.4	V_{CCI} V_{CCI}	V
V_{OL}	(I_{OL}= 20 µA) (CMOS) (I_{OL} = 12 mA) (TTL) (I_{OL} = 8 mA) (TTL)		0.10 0.50		 0.50	V
V_{IL}			0.8		0.8	V
V_{IH}		2.0		2.0		V
t_R, t_F	Input Transition Time t_R, t_F		50		50	ns
C_{IO}	C_{IO} I/O Capacitance		10		10	pF
I_{CC}	Standby Current, I_{CC}		4.0		4.0	mA
$I_{CC(D)}$	$I_{CC(D)}$ $I_{Dynamic}$ V_{CC} Supply Current	See "Evaluating Power in SX Devices" on page 1-16.				

PCI Compliance for the SX Family

The SX family supports 3.3 V and 5.0 V PCI and is compliant with the PCI Local Bus Specification Rev. 2.1.

Table 1-6 • **A54SX16P DC Specifications (5.0 V PCI Operation)**

Symbol	Parameter	Condition	Min.	Max.	Units
V_{CCA}	Supply Voltage for Array		3.0	3.6	V
V_{CCR}	Supply Voltage required for Internal Biasing		4.75	5.25	V
V_{CCI}	Supply Voltage for I/Os		4.75	5.25	V
V_{IH}	Input High Voltage[1]		2.0	V_{CC} + 0.5	V
V_{IL}	Input Low Voltage[1]		–0.5	0.8	V
I_{IH}	Input High Leakage Current	V_{IN} = 2.7		70	µA
I_{IL}	Input Low Leakage Current	V_{IN} = 0.5		–70	µA
V_{OH}	Output High Voltage	I_{OUT} = –2 mA	2.4		V
V_{OL}	Output Low Voltage[2]	I_{OUT} = 3 mA, 6 mA		0.55	V
C_{IN}	Input Pin Capacitance[3]			10	pF
C_{CLK}	CLK Pin Capacitance		5	12	pF
C_{IDSEL}	IDSEL Pin Capacitance[4]			8	pF

Notes:

1. *Input leakage currents include hi-Z output leakage for all bidirectional buffers with tristate outputs.*
2. *Signals without pull-up resistors must have 3 mA low output current. Signals requiring pull-up must have 6 mA; the latter include, FRAME#, IRDY#, TRDY#, DEVSEL#, STOP#, SERR#, PERR#, LOCK#, and, when used, AD[63::32], C/BE[7::4]#, PAR64, REQ64#, and ACK64#.*
3. *Absolute maximum pin capacitance for a PCI input is 10 pF (except for CLK).*
4. *Lower capacitance on this input-only pin allows for non-resistive coupling to AD[xx].*

A54SX16P AC Specifications for (PCI Operation)

Table 1-7 • **A54SX16P AC Specifications for (PCI Operation)**

Symbol	Parameter	Condition	Min.	Max.	Units
$I_{OH(AC)}$	Switching Current High	$0 < V_{OUT} \le 1.4$[1]	–44		mA
		$1.4 \le V_{OUT} < 2.4$[1, 2]	$-44 + (V_{OUT} - 1.4)/0.024$		mA
		$3.1 < V_{OUT} < V_{CC}$[1, 3]		EQ 1-1 on page 1-11	
	(Test Point)	$V_{OUT} = 3.1$[3]		–142	mA
$I_{OL(AC)}$	Switching Current High	$V_{OUT} \ge 2.2$[1]	95		mA
		$2.2 > V_{OUT} > 0.55$[1]	$V_{OUT}/0.023$		
		$0.71 > V_{OUT} > 0$[1, 3]		EQ 1-2 on page 1-11	mA
	(Test Point)	$V_{OUT} = 0.71$[3]		206	mA
I_{CL}	Low Clamp Current	$-5 < V_{IN} \le -1$	$-25 + (V_{IN} + 1)/0.015$		mA
$slew_R$	Output Rise Slew Rate	0.4 V to 2.4 V load[4]	1	5	V/ns
$slew_F$	Output Fall Slew Rate	2.4 V to 0.4 V load[4]	1	5	V/ns

Notes:

1. *Refer to the V/I curves in Figure 1-9 on page 1-11. Switching current characteristics for REQ# and GNT# are permitted to be one half of that specified here; i.e., half-size output drivers may be used on these signals. This specification does not apply to CLK and RST#, which are system outputs. "Switching Current High" specifications are not relevant to SERR#, INTA#, INTB#, INTC#, and INTD#, which are open drain outputs.*
2. *Note that this segment of the minimum current curve is drawn from the AC drive point directly to the DC drive point rather than toward the voltage rail (as is done in the pull-down curve). This difference is intended to allow for an optional N-channel pull-up.*
3. *Maximum current requirements must be met as drivers pull beyond the last step voltage. Equations defining these maximums (A and B) are provided with the respective diagrams in Figure 1-9 on page 1-11. The equation defined maxima should be met by design. In order to facilitate component testing, a maximum current test point is defined for each side of the output driver.*
4. *This parameter is to be interpreted as the cumulative edge rate across the specified range, rather than the instantaneous rate at any point within the transition range. The specified load (diagram below) is optional; i.e., the designer may elect to meet this parameter with an unloaded output per revision 2.0 of the PCI Local Bus Specification. However, adherence to both maximum and minimum parameters is now required (the maximum is no longer simply a guideline). Since adherence to the maximum slew rate was not required prior to revision 2.1 of the specification, there may be components in the market for some time that have faster edge rates; therefore, motherboard designers must bear in mind that rise and fall times faster than this specification could occur, and should ensure that signal integrity modeling accounts for this. Rise slew rate does not apply to open drain outputs.*

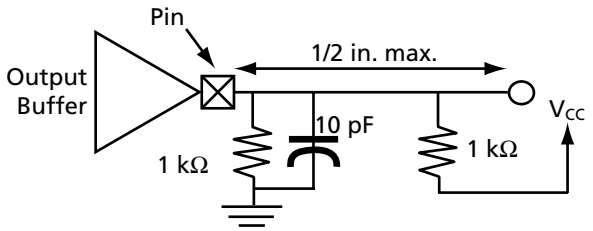

Figure 1-9 shows the 5.0 V PCI V/I curve and the minimum and maximum PCI drive characteristics of the A54SX16P device.

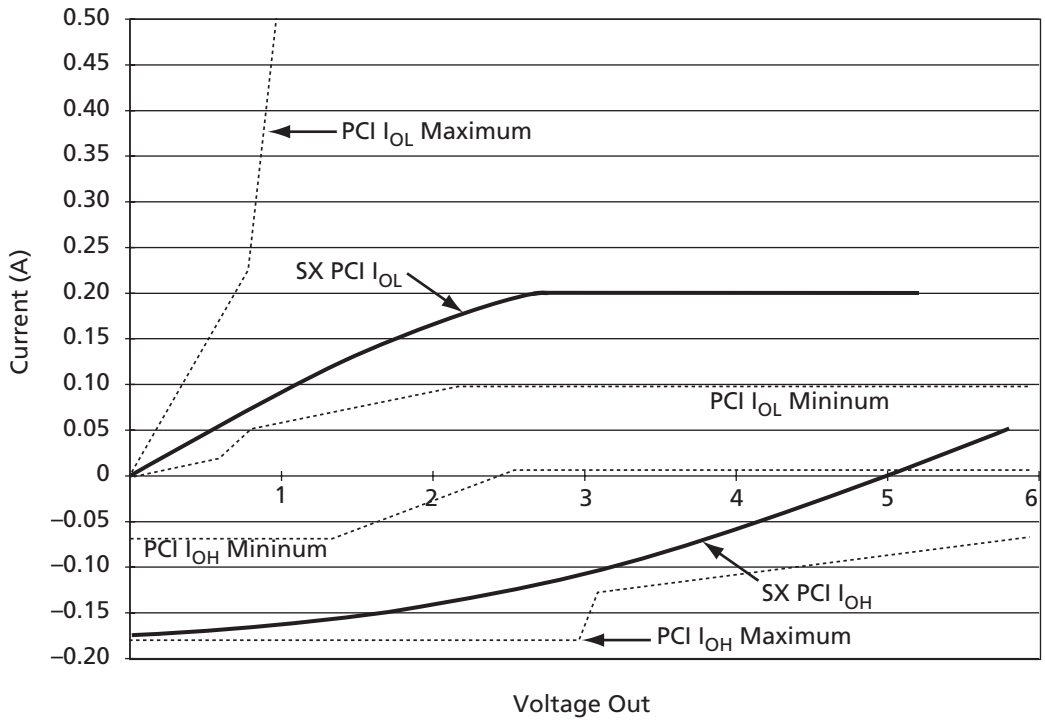

Figure 1-9 • **5.0 V PCI Curve for A54SX16P Device**

$$I_{OH} = 11.9 \times (V_{OUT} - 5.25) \times (V_{OUT} + 2.45)$$

for $V_{CC} > V_{OUT} > 3.1$ V

EQ 1-1

$$I_{OL} = 78.5 \times V_{OUT} \times (4.4 - V_{OUT})$$

for $0 \text{ V} < V_{OUT} < 0.71$ V

EQ 1-2

A54SX16P DC Specifications (3.3 V PCI Operation)

Table 1-8 • **A54SX16P DC Specifications (3.3 V PCI Operation)**

Symbol	Parameter	Condition	Min.	Max.	Units
V_{CCA}	Supply Voltage for Array		3.0	3.6	V
V_{CCR}	Supply Voltage required for Internal Biasing		3.0	3.6	V
V_{CCI}	Supply Voltage for I/Os		3.0	3.6	V
V_{IH}	Input High Voltage		$0.5V_{CC}$	V_{CC} + 0.5	V
V_{IL}	Input Low Voltage		–0.5	$0.3V_{CC}$	V
I_{IPU}	Input Pull-up Voltage[1]		$0.7V_{CC}$		V
I_{IL}	Input Leakage Current[2]	$0 < V_{IN} < V_{CC}$		±10	µA
V_{OH}	Output High Voltage	I_{OUT} = –500 µA	$0.9V_{CC}$		V
V_{OL}	Output Low Voltage	I_{OUT} = 1500 µA		$0.1V_{CC}$	V
C_{IN}	Input Pin Capacitance[3]			10	pF
C_{CLK}	CLK Pin Capacitance		5	12	pF
C_{IDSEL}	IDSEL Pin Capacitance[4]			8	pF

Notes:

1. *This specification should be guaranteed by design. It is the minimum voltage to which pull-up resistors are calculated to pull a floated network. Applications sensitive to static power utilization should assure that the input buffer is conducting minimum current at this input voltage.*
2. *Input leakage currents include hi-Z output leakage for all bidirectional buffers with tristate outputs.*
3. *Absolute maximum pin capacitance for a PCI input is 10 pF (except for CLK).*
4. *Lower capacitance on this input-only pin allows for non-resistive coupling to AD[xx].*

A54SX16P AC Specifications (3.3 V PCI Operation)

Table 1-9 • **A54SX16P AC Specifications (3.3 V PCI Operation)**

Symbol	Parameter	Condition	Min.	Max.	Units
$I_{OH(AC)}$	Switching Current High	$0 < V_{OUT} \le 0.3V_{CC}$[1]			mA
		$0.3V_{CC} \le V_{OUT} < 0.9V_{CC}$[1]	$-12V_{CC}$		mA
		$0.7V_{CC} < V_{OUT} < V_{CC}$[1, 2]	$-17.1 + (V_{CC} - V_{OUT})$	EQ 1-3 on page 1-14	
	(Test Point)	$V_{OUT} = 0.7V_{CC}$[2]		$-32V_{CC}$	mA
$I_{OL(AC)}$	Switching Current High	$V_{CC} > V_{OUT} \ge 0.6V_{CC}$[1]			mA
		$0.6V_{CC} > V_{OUT} > 0.1V_{CC}$[1]	$16V_{CC}$		mA
		$0.18V_{CC} > V_{OUT} > 0$[1, 2]	$26.7V_{OUT}$	EQ 1-4 on page 1-14	mA
	(Test Point)	$V_{OUT} = 0.18V_{CC}$[2]		$38V_{CC}$	
I_{CL}	Low Clamp Current	$-3 < V_{IN} \le -1$	$-25 + (V_{IN} + 1)/0.015$		mA
I_{CH}	High Clamp Current	$-3 < V_{IN} \le -1$	$25 + (V_{IN} - V_{OUT} - 1)/0.015$		mA
$slew_R$	Output Rise Slew Rate[3]	$0.2V_{CC}$ to $0.6V_{CC}$ load	1	4	V/ns
$slew_F$	Output Fall Slew Rate[3]	$0.6V_{CC}$ to $0.2V_{CC}$ load	1	4	V/ns

Notes:

1. *Refer to the V/I curves in Figure 1-10 on page 1-14. Switching current characteristics for REQ# and GNT# are permitted to be one half of that specified here; i.e., half size output drivers may be used on these signals. This specification does not apply to CLK and RST# which are system outputs. "Switching Current High" specification are not relevant to SERR#, INTA#, INTB#, INTC#, and INTD# which are open drain outputs.*
2. *Maximum current requirements must be met as drivers pull beyond the last step voltage. Equations defining these maximums (C and D) are provided with the respective diagrams in Figure 1-10 on page 1-14. The equation defined maxima should be met by design. In order to facilitate component testing, a maximum current test point is defined for each side of the output driver.*
3. *This parameter is to be interpreted as the cumulative edge rate across the specified range, rather than the instantaneous rate at any point within the transition range. The specified load (diagram below) is optional; i.e., the designer may elect to meet this parameter with an unloaded output per the latest revision of the PCI Local Bus Specification. However, adherence to both maximum and minimum parameters is required (the maximum is no longer simply a guideline). Rise slew rate does not apply to open drain outputs.*

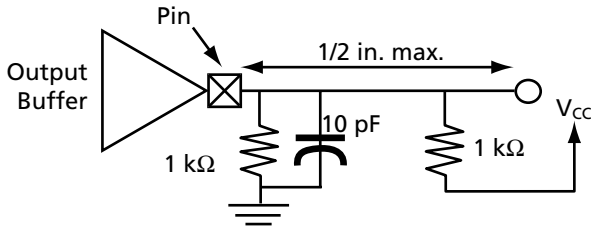

Figure 1-10 shows the 3.3 V PCI V/I curve and the minimum and maximum PCI drive characteristics of the A54SX16P device.

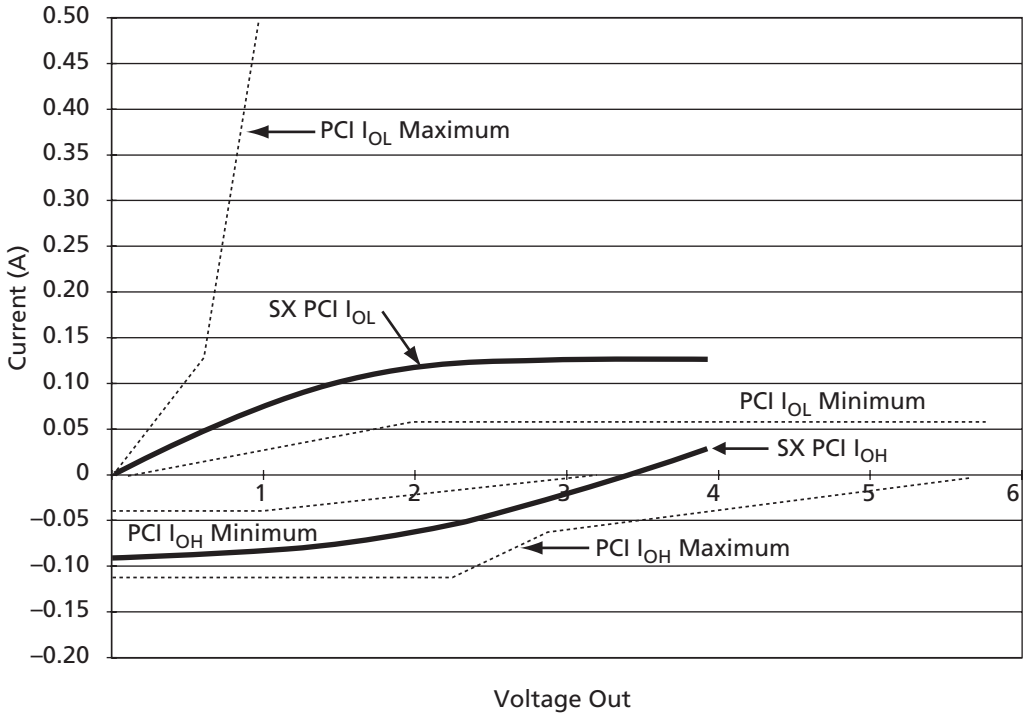

Figure 1-10 • **3.3 V PCI Curve for A54SX16P Device**

$$I_{OH} = (98.0/V_{CC}) \times (V_{OUT} - V_{CC}) \times (V_{OUT} + 0.4V_{CC})$$

for $V_{CC} > V_{OUT} > 0.7\ V_{CC}$

EQ 1-3

$$I_{OL} = (256/V_{CC}) \times V_{OUT} \times (V_{CC} - V_{OUT})$$

for $0\ V < V_{OUT} < 0.18\ V_{CC}$

EQ 1-4

Power-Up Sequencing

Table 1-10 • **Power-Up Sequencing**

V_{CCA}	V_{CCR}	V_{CCI}	Power-Up Sequence	Comments
A54SX08, A54SX16, A54SX32				
3.3 V	5.0 V	3.3 V	5.0 V First 3.3 V Second	No possible damage to device
			3.3 V First 5.0 V Second	Possible damage to device
A54SX16P				
3.3 V	3.3 V	3.3 V	3.3 V Only	No possible damage to device
3.3 V	5.0 V	3.3 V	5.0 V First 3.3 V Second	No possible damage to device
			3.3 V First 5.0 V Second	Possible damage to device
3.3 V	5.0 V	5.0 V	5.0 V First 3.3 V Second	No possible damage to device
			3.3 V First 5.0 V Second	No possible damage to device

Note: *No inputs should be driven (high or low) before completion of power-up.*

Power-Down Sequencing

Table 1-11 • **Power-Down Sequencing**

V_{CCA}	V_{CCR}	V_{CCI}	Power-Down Sequence	Comments
A54SX08, A54SX16, A54SX32				
3.3 V	5.0 V	3.3 V	5.0 V First 3.3 V Second	Possible damage to device
			3.3 V First 5.0 V Second	No possible damage to device
A54SX16P				
3.3 V	3.3 V	3.3 V	3.3 V Only	No possible damage to device
3.3 V	5.0 V	3.3 V	5.0 V First 3.3 V Second	Possible damage to device
			3.3 V First 5.0 V Second	No possible damage to device
3.3 V	5.0 V	5.0 V	5.0 V First 3.3 V Second	No possible damage to device
			3.3 V First 5.0 V Second	No possible damage to device

Note: *No inputs should be driven (high or low) after the beginning of the power-down sequence.*

Evaluating Power in SX Devices

A critical element of system reliability is the ability of electronic devices to safely dissipate the heat generated during operation. The thermal characteristics of a circuit depend on the device and package used, the operating temperature, the operating current, and the system's ability to dissipate heat.

You should complete a power evaluation early in the design process to help identify potential heat-related problems in the system and to prevent the system from exceeding the device's maximum allowed junction temperature.

The actual power dissipated by most applications is significantly lower than the power the package can dissipate. However, a thermal analysis should be performed for all projects. To perform a power evaluation, follow these steps:

1. Estimate the power consumption of the application.
2. Calculate the maximum power allowed for the device and package.
3. Compare the estimated power and maximum power values.

Estimating Power Consumption

The total power dissipation for the SX family is the sum of the DC power dissipation and the AC power dissipation. Use EQ 1-5 to calculate the estimated power consumption of your application.

$$P_{Total} = P_{DC} + P_{AC}$$

EQ 1-5

DC Power Dissipation

The power due to standby current is typically a small component of the overall power. The Standby power is shown in Table 1-12 for commercial, worst-case conditions (70°C).

Table 1-12 • **Standby Power**

I_{CC}	V_{CC}	Power
4 mA	3.6 V	14.4 mW

The DC power dissipation is defined in EQ 1-6.

$$P_{DC} = (I_{standby}) \times V_{CCA} + (I_{standby}) \times V_{CCR} + (I_{standby}) \times V_{CCI} + xV_{OL} \times I_{OL} + y(V_{CCI} - V_{OH}) \times V_{OH}$$

EQ 1-6

AC Power Dissipation

The power dissipation of the SX Family is usually dominated by the dynamic power dissipation. Dynamic power dissipation is a function of frequency, equivalent capacitance, and power supply voltage. The AC power dissipation is defined in EQ 1-7 and EQ 1-8.

$$P_{AC} = P_{Module} + P_{RCLKA\ Net} + P_{RCLKB\ Net} + P_{HCLK\ Net} + P_{Output\ Buffer} + P_{Input\ Buffer}$$

EQ 1-7

$$P_{AC} = V_{CCA}^2 \times [(m \times C_{EQM} \times f_m)_{Module} + (n \times C_{EQI} \times f_n)_{Input\ Buffer} + (p \times (C_{EQO} + C_L) \times f_p)_{Output\ Buffer} + (0.5 \times (q_1 \times C_{EQCR} \times f_{q1}) + (r_1 \times f_{q1}))_{RCLKA} + (0.5 \times (q2 \times CEQCR \times f_{q2}) + (r2 \times f_{q2}))RCLKB + (0.5 \times (s_1 \times C_{EQHV} \times f_{s1}) + (C_{EQHF} \times f_{s1}))_{HCLK}]$$

EQ 1-8

Definition of Terms Used in Formula

m	=	Number of logic modules switching at f_m
n	=	Number of input buffers switching at f_n
p	=	Number of output buffers switching at f_p
q_1	=	Number of clock loads on the first routed array clock
q_2	=	Number of clock loads on the second routed array clock
x	=	Number of I/Os at logic low
y	=	Number of I/Os at logic high
r_1	=	Fixed capacitance due to first routed array clock
r_2	=	Fixed capacitance due to second routed array clock
s_1	=	Number of clock loads on the dedicated array clock
C_{EQM}	=	Equivalent capacitance of logic modules in pF
C_{EQI}	=	Equivalent capacitance of input buffers in pF
C_{EQO}	=	Equivalent capacitance of output buffers in pF
C_{EQCR}	=	Equivalent capacitance of routed array clock in pF
C_{EQHV}	=	Variable capacitance of dedicated array clock
C_{EQHF}	=	Fixed capacitance of dedicated array clock
C_L	=	Output lead capacitance in pF
f_m	=	Average logic module switching rate in MHz
f_n	=	Average input buffer switching rate in MHz
f_p	=	Average output buffer switching rate in MHz
f_{q1}	=	Average first routed array clock rate in MHz
f_{q2}	=	Average second routed array clock rate in MHz
f_{s1}	=	Average dedicated array clock rate in MHz

Table 1-13 shows capacitance values for various devices.

Table 1-13 • **Capacitance Values for Devices**

	A54SX08	A54SX16	A54SX16P	A54SX32
C_{EQM} (pF)	4.0	4.0	4.0	4.0
C_{EQI} (pF)	3.4	3.4	3.4	3.4
C_{EQO} (pF)	4.7	4.7	4.7	4.7
C_{EQCR} (pF)	1.6	1.6	1.6	1.6
C_{EQHV}	0.615	0.615	0.615	0.615
C_{EQHF}	60	96	96	140
r_1 (pF)	87	138	138	171
r_2 (pF)	87	138	138	171

Guidelines for Calculating Power Consumption

The power consumption guidelines are meant to represent worst-case scenarios so that they can be generally used to predict the upper limits of power dissipation. These guidelines are shown in Table 1-14.

Sample Power Calculation

One of the designs used to characterize the SX family was a 528 bit serial-in, serial-out shift register. The design utilized 100 percent of the dedicated flip-flops of an A54SX16P device. A pattern of 0101… was clocked into the device at frequencies ranging from 1 MHz to 200 MHz. Shifting in a series of 0101… caused 50 percent of the flip-flops to toggle from low to high at every clock cycle.

Table 1-14 • **Power Consumption Guidelines**

Description	Power Consumption Guideline
Logic Modules (m)	20% of modules
Inputs Switching (n)	# inputs/4
Outputs Switching (p)	# outputs/4
First Routed Array Clock Loads (q_1)	20% of register cells
Second Routed Array Clock Loads (q_2)	20% of register cells
Load Capacitance (C_L)	35 pF
Average Logic Module Switching Rate (f_m)	f/10
Average Input Switching Rate (f_n)	f/5
Average Output Switching Rate (f_p)	f/10
Average First Routed Array Clock Rate (f_{q1})	f/2
Average Second Routed Array Clock Rate (f_{q2})	f/2
Average Dedicated Array Clock Rate (f_{s1})	f
Dedicated Clock Array Clock Loads (s_1)	20% of regular modules

Follow the steps below to estimate power consumption. The values provided for the sample calculation below are for the shift register design above. This method for estimating power consumption is conservative and the actual power consumption of your design may be less than the estimated power consumption.

The total power dissipation for the SX family is the sum of the AC power dissipation and the DC power dissipation.

$$P_{Total} = P_{AC} \text{ (dynamic power)} + P_{DC} \text{ (static power)}$$

EQ 1-9

AC Power Dissipation

$$P_{AC} = P_{Module} + P_{RCLKA\ Net} + P_{RCLKB\ Net} + P_{HCLK\ Net} + P_{Output\ Buffer} + P_{Input\ Buffer}$$

EQ 1-10

$$P_{AC} = V_{CCA}^2 \times [(m \times C_{EQM} \times f_m)_{Module} + (n \times C_{EQI} \times f_n)_{Input\ Buffer} + (p \times (C_{EQO} + C_L) \times f_p)_{Output\ Buffer} + (0.5\ (q_1 \times C_{EQCR} \times f_{q1}) + (r_1 \times f_{q1}))_{RCLKA} + (0.5\ (q_2 \times C_{EQCR} \times f_{q2}) + (r_2 \times f_{q2}))_{RCLKB} + (0.5\ (s_1 \times C_{EQHV} \times f_{s1}) + (C_{EQHF} \times f_{s1}))_{HCLK}]$$

EQ 1-11

Step 1: Define Terms Used in Formula

	V_{CCA}	3.3
Module		
Number of logic modules switching at f_m (Used 50%)	m	264
Average logic modules switching rate f_m (MHz) (Guidelines: f/10)	f_m	20
Module capacitance C_{EQM} (pF)	C_{EQM}	4.0
Input Buffer		
Number of input buffers switching at f_n	n	1
Average input switching rate f_n (MHz) (Guidelines: f/5)	f_n	40
Input buffer capacitance C_{EQI} (pF)	C_{EQI}	3.4
Output Buffer		
Number of output buffers switching at f_p	p	1
Average output buffers switching rate f_p(MHz) (Guidelines: f/10)	f_p	20
Output buffers buffer capacitance C_{EQO} (pF)	C_{EQO}	4.7
Output Load capacitance C_L (pF)	C_L	35
RCLKA		
Number of Clock loads q_1	q_1	528
Capacitance of routed array clock (pF)	C_{EQCR}	1.6
Average clock rate (MHz)	f_{q1}	200
Fixed capacitance (pF)	r_1	138
RCLKB		
Number of Clock loads q_2	q_2	0
Capacitance of routed array clock (pF)	C_{EQCR}	1.6
Average clock rate (MHz)	f_{q2}	0
Fixed capacitance (pF)	r_2	138
HCLK		
Number of Clock loads	s_1	0
Variable capacitance of dedicated array clock (pF)	C_{EQHV}	0.615
Fixed capacitance of dedicated array clock (pF)	C_{EQHF}	96
Average clock rate (MHz)	f_{s1}	0

Step 2: Calculate Dynamic Power Consumption

$V_{CCA} \times V_{CCA}$	10.89
$m \times f_m \times C_{EQM}$	0.02112
$n \times f_n \times C_{EQI}$	0.000136
$p \times f_p \times (C_{EQO}+C_L)$	0.000794
$0.5\ (q_1 \times C_{EQCR} \times f_{q1}) + (r_1 \times f_{q1})$	0.11208
$0.5(q_2 \times C_{EQCR} \times f_{q2}) + (r_2 \times f_{q2})$	0
$0.5\ (s_1 \times C_{EQHV} \times f_{s1}) + (C_{EQHF} \times f_{s1})$	0

P_{AC} = 1.461 W

Step 3: Calculate DC Power Dissipation

DC Power Dissipation

$$P_{DC} = (I_{standby}) \times V_{CCA} + (I_{standby}) \times V_{CCR} + (I_{standby}) \times V_{CCI} + X \times V_{OL} \times I_{OL} + Y(V_{CCI} - V_{OH}) \times V_{OH}$$

EQ 1-12

For a rough estimate of DC Power Dissipation, only use $P_{DC} = (I_{standby}) \times V_{CCA}$. The rest of the formula provides a very small number that can be considered negligible.

$$P_{DC} = (I_{standby}) \times V_{CCA}$$

$$P_{DC} = .55\ mA \times 3.3\ V$$

$$P_{DC} = 0.001815\ W$$

Step 4: Calculate Total Power Consumption

$$P_{Total} = P_{AC} + P_{DC}$$

$$P_{Total} = 1.461 + 0.001815$$

$$P_{Total} = 1.4628\ W$$

Step 5: Compare Estimated Power Consumption against Characterized Power Consumption

The estimated total power consumption for this design is 1.46 W. The characterized power consumption for this design at 200 MHz is 1.0164 W.

Figure 1-11 shows the characterized power dissipation numbers for the shift register design using frequencies ranging from 1 MHz to 200 MHz.

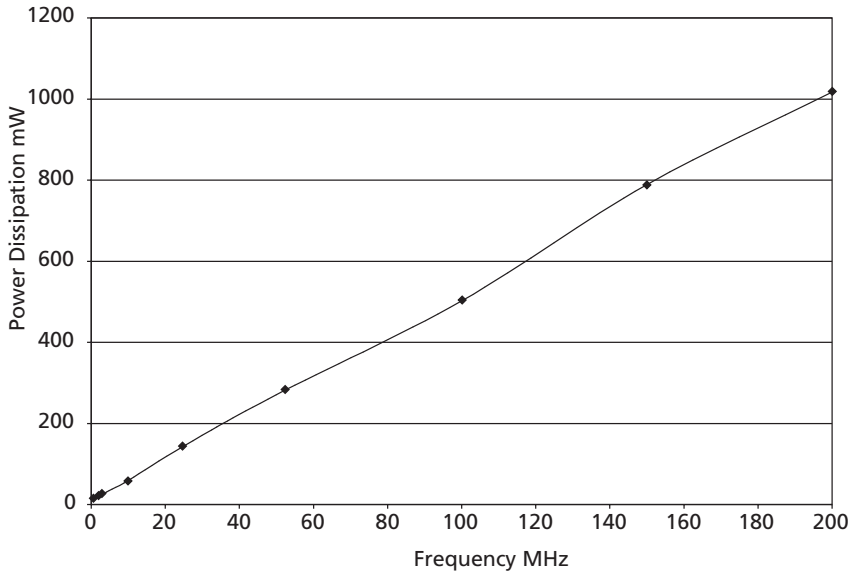

Figure 1-11 • **Power Dissipation**

Junction Temperature (T_J)

The temperature that you select in Designer Series software is the junction temperature, not ambient temperature. This is an important distinction because the heat generated from dynamic power consumption is usually hotter than the ambient temperature. Use the equation below to calculate junction temperature.

$$\text{Junction Temperature} = \Delta T + T_a \qquad \textit{EQ 1-13}$$

Where:

T_a = Ambient Temperature

ΔT = Temperature gradient between junction (silicon) and ambient

$\Delta T = \theta_{ja} \times P$

P = Power calculated from Estimating Power Consumption section

θ_{ja} = Junction to ambient of package. θ_{ja} numbers are located in the "Package Thermal Characteristics" section.

Package Thermal Characteristics

The device junction to case thermal characteristic is θ_{jc}, and the junction to ambient air characteristic is θ_{ja}. The thermal characteristics for θ_{ja} are shown with two different air flow rates.

The maximum junction temperature is 150 °C.

A sample calculation of the absolute maximum power dissipation allowed for a TQFP 176-pin package at commercial temperature and still air is as follows:

$$\text{Maximum Power Allowed} = \frac{\text{Max. junction temp. (°C)} - \text{Max. ambient temp. (°C)}}{\theta_{ja}\ \text{(°C/W)}} = \frac{150°C - 70°C}{28°C/W} = 2.86\ W \qquad \textit{EQ 1-14}$$

Table 1-15 • **Package Thermal Characteristics**

Package Type	Pin Count	θ_{jc}	θ_{ja} Still Air	θ_{ja} 300 ft/min.	Units
Plastic Leaded Chip Carrier (PLCC)	84	12	32	22	°C/W
Thin Quad Flat Pack (TQFP)	144	11	32	24	°C/W
Thin Quad Flat Pack (TQFP)	176	11	28	21	°C/W
Very Thin Quad Flatpack (VQFP)	100	10	38	32	°C/W
Plastic Quad Flat Pack (PQFP) without Heat Spreader	208	8	30	23	°C/W
Plastic Quad Flat Pack (PQFP) with Heat Spreader	208	3.8	20	17	°C/W
Plastic Ball Grid Array (PBGA)	272	3	20	14.5	°C/W
Plastic Ball Grid Array (PBGA)	313	3	23	17	°C/W
Plastic Ball Grid Array (PBGA)	329	3	18	13.5	°C/W
Fine Pitch Ball Grid Array (FBGA)	144	3.8	38.8	26.7	°C/W

Note: *SX08 does not have a heat spreader.*

Table 1-16 • **Temperature and Voltage Derating Factors***

V_{CCA}	Junction Temperature						
	–55	–40	0	25	70	85	125
3.0	0.75	0.78	0.87	0.89	1.00	1.04	1.16
3.3	0.70	0.73	0.82	0.83	0.93	0.97	1.08
3.6	0.66	0.69	0.77	0.78	0.87	0.92	1.02

Note: **Normalized to worst-case commercial, T_J = 70°C, V_{CCA} = 3.0 V*

SX Timing Model

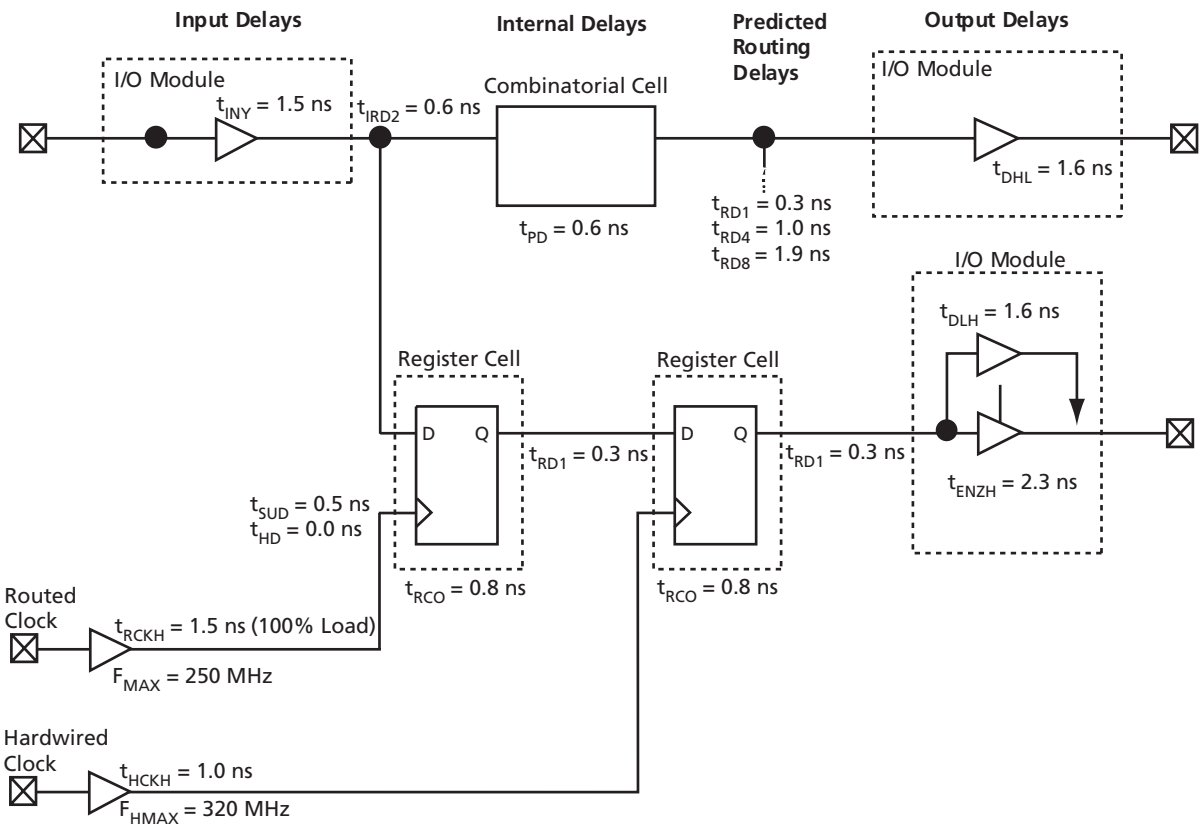

Note: *Values shown for A54SX08-3, worst-case commercial conditions.*

Figure 1-12 • **SX Timing Model**

Hardwired Clock

External Setup = $t_{INY} + t_{IRD1} + t_{SUD} - t_{HCKH}$

= 1.5 + 0.3 + 0.5 – 1.0 = 1.3 ns

EQ 1-15

Clock-to-Out (Pin-to-Pin)

= $t_{HCKH} + t_{RCO} + t_{RD1} + t_{DHL}$

= 1.0 + 0.8 + 0.3 + 1.6 = 3.7 ns

EQ 1-16

Routed Clock

External Setup = $t_{INY} + t_{IRD1} + t_{SUD} - t_{RCKH}$

= 1.5 + 0.3 + 0.5 – 1.5 = 0.8 ns

EQ 1-17

Clock-to-Out (Pin-to-Pin)

= $t_{RCKH} + t_{RCO} + t_{RD1} + t_{DHL}$

= 1.52+ 0.8 + 0.3 + 1.6 = 4.2 ns

EQ 1-18

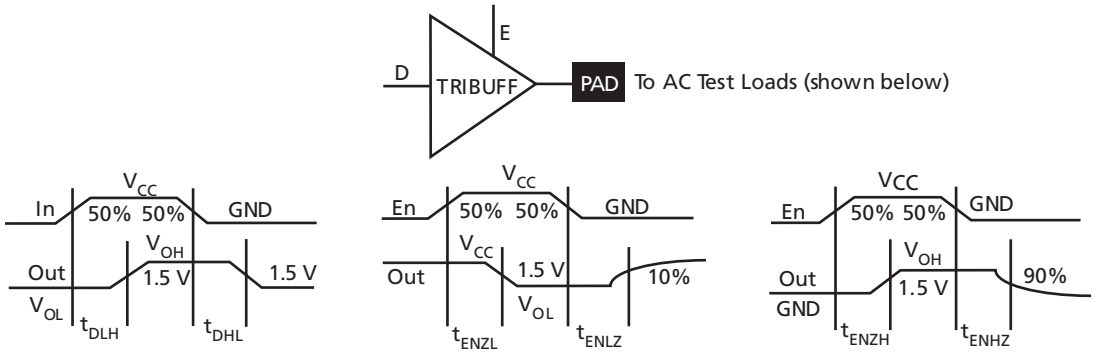

Figure 1-13 • **Output Buffer Delays**

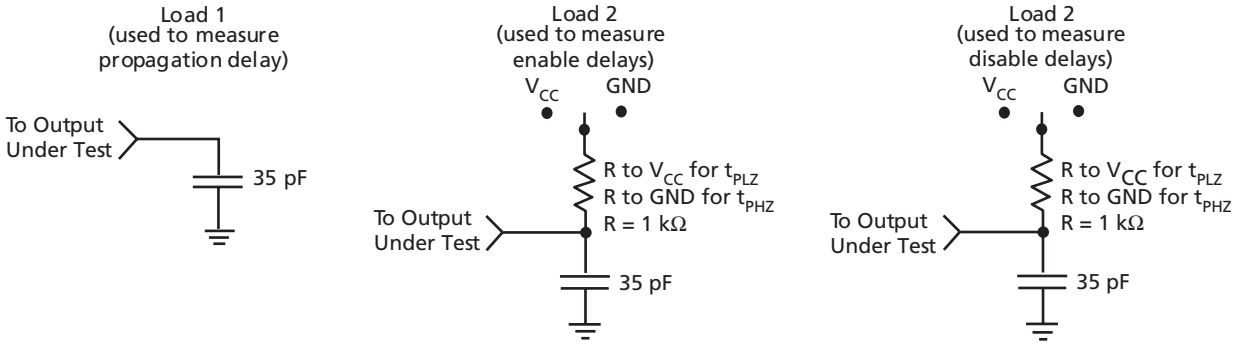

Figure 1-14 • **AC Test Loads**

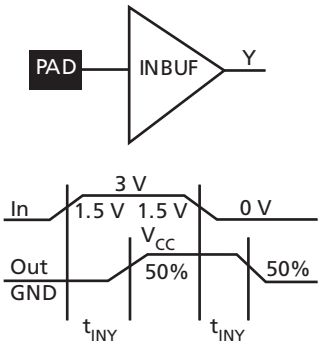

Figure 1-15 • **Input Buffer Delays**

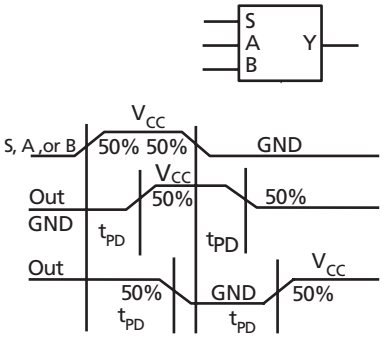

Figure 1-16 • **C-Cell Delays**

Register Cell Timing Characteristics

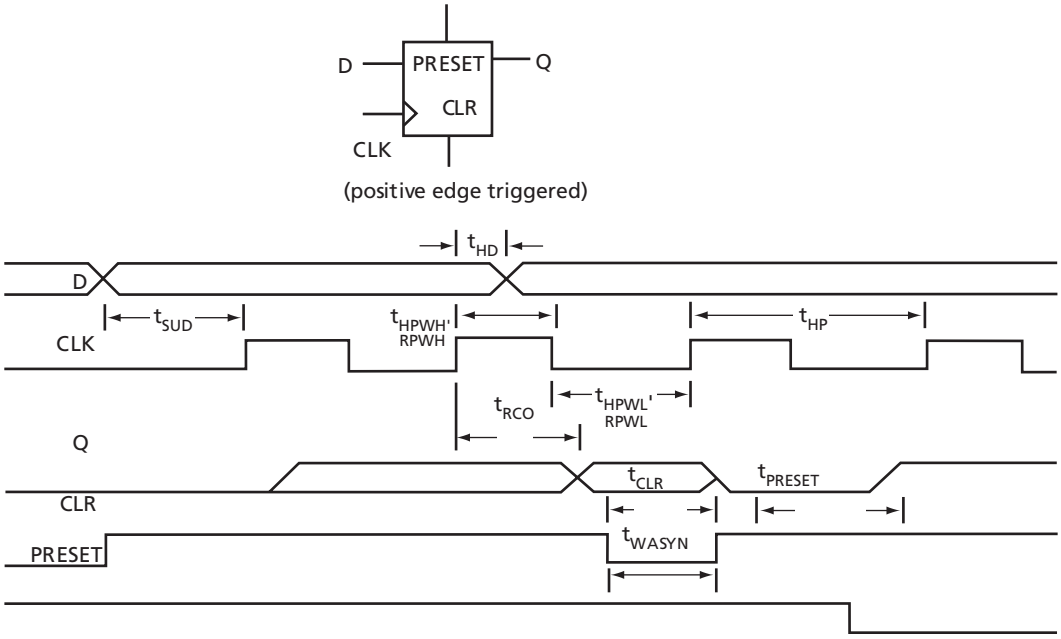

Figure 1-17 • **Flip-Flops**

Timing Characteristics

Timing characteristics for SX devices fall into three categories: family-dependent, device-dependent, and design-dependent. The input and output buffer characteristics are common to all SX family members. Internal routing delays are device-dependent. Design dependency means actual delays are not determined until after placement and routing of the user's design is complete. Delay values may then be determined by using the DirectTime Analyzer utility or performing simulation with post-layout delays.

Critical Nets and Typical Nets

Propagation delays are expressed only for typical nets, which are used for initial design performance evaluation. Critical net delays can then be applied to the most time-critical paths. Critical nets are determined by net property assignment prior to placement and routing. Up to 6% of the nets in a design may be designated as critical, while 90% of the nets in a design are typical.

Long Tracks

Some nets in the design use long tracks. Long tracks are special routing resources that span multiple rows, columns, or modules. Long tracks employ three and sometimes five antifuse connections. This increases capacitance and resistance, resulting in longer net delays for macros connected to long tracks. Typically up to 6 percent of nets in a fully utilized device require long tracks. Long tracks contribute approximately 4 ns to 8.4 ns delay. This additional delay is represented statistically in higher fanout (FO = 24) routing delays in the datasheet specifications section.

Timing Derating

SX devices are manufactured in a CMOS process. Therefore, device performance varies according to temperature, voltage, and process variations. Minimum timing parameters reflect maximum operating voltage, minimum operating temperature, and best-case processing. Maximum timing parameters reflect minimum operating voltage, maximum operating temperature, and worst-case processing.

A54SX08 Timing Characteristics

Table 1-17 • **A54SX08 Timing Characteristics (Worst-Case Commercial Conditions, V_{CCR} = 4.75 V, V_{CCA},V_{CCI} = 3.0 V, T_J = 70°C)**

Parameter	Description	'–3' Speed		'–2' Speed		'–1' Speed		'Std' Speed		Units
		Min.	Max.	Min.	Max.	Min.	Max.	Min.	Max.	
C-Cell Propagation Delays[1]										
t_{PD}	Internal Array Module		0.6		0.7		0.8		0.9	ns
Predicted Routing Delays[2]										
t_{DC}	FO = 1 Routing Delay, Direct Connect		0.1		0.1		0.1		0.1	ns
t_{FC}	FO = 1 Routing Delay, Fast Connect		0.3		0.4		0.4		0.5	ns
t_{RD1}	FO = 1 Routing Delay		0.3		0.4		0.4		0.5	ns
t_{RD2}	FO = 2 Routing Delay		0.6		0.7		0.8		0.9	ns
t_{RD3}	FO = 3 Routing Delay		0.8		0.9		1.0		1.2	ns
t_{RD4}	FO = 4 Routing Delay		1.0		1.2		1.4		1.6	ns
t_{RD8}	FO = 8 Routing Delay		1.9		2.2		2.5		2.9	ns
t_{RD12}	FO = 12 Routing Delay		2.8		3.2		3.7		4.3	ns
R-Cell Timing										
t_{RCO}	Sequential Clock-to-Q		0.8		1.1		1.2		1.4	ns
t_{CLR}	Asynchronous Clear-to-Q		0.5		0.6		0.7		0.8	ns
t_{PRESET}	Asynchronous Preset-to-Q		0.7		0.8		0.9		1.0	ns
t_{SUD}	Flip-Flop Data Input Set-Up	0.5		0.5		0.7		0.8		ns
t_{HD}	Flip-Flop Data Input Hold	0.0		0.0		0.0		0.0		ns
t_{WASYN}	Asynchronous Pulse Width	1.4		1.6		1.8		2.1		ns
Input Module Propagation Delays										
t_{INYH}	Input Data Pad-to-Y HIGH		1.5		1.7		1.9		2.2	ns
t_{INYL}	Input Data Pad-to-Y LOW		1.5		1.7		1.9		2.2	ns
Input Module Predicted Routing Delays[2]										
t_{IRD1}	FO = 1 Routing Delay		0.3		0.4		0.4		0.5	ns
t_{IRD2}	FO = 2 Routing Delay		0.6		0.7		0.8		0.9	ns
t_{IRD3}	FO = 3 Routing Delay		0.8		0.9		1.0		1.2	ns
t_{IRD4}	FO = 4 Routing Delay		1.0		1.2		1.4		1.6	ns
t_{IRD8}	FO = 8 Routing Delay		1.9		2.2		2.5		2.9	ns
t_{IRD12}	FO = 12 Routing Delay		2.8		3.2		3.7		4.3	ns

Note:

1. *For dual-module macros, use $t_{PD} + t_{RD1} + t_{PDn}$, $t_{RCO} + t_{RD1} + t_{PDn}$, or $t_{PD1} + t_{RD1} + t_{SUD}$, whichever is appropriate.*
2. *Routing delays are for typical designs across worst-case operating conditions. These parameters should be used for estimating device performance. Post-route timing analysis or simulation is required to determine actual worst-case performance. Post-route timing is based on actual routing delay measurements performed on the device prior to shipment.*

Table 1-17 • **A54SX08 Timing Characteristics (Continued)**
(Worst-Case Commercial Conditions, V_{CCR} = 4.75 V, V_{CCA},V_{CCI} = 3.0 V, T_J = 70°C)

Parameter	Description	'–3' Speed		'–2' Speed		'–1' Speed		'Std' Speed		
		Min.	Max.	Min.	Max.	Min.	Max.	Min.	Max.	Units
Dedicated (Hardwired) Array Clock Network										
t_{HCKH}	Input LOW to HIGH (pad to R-Cell input)		1.0		1.1		1.3		1.5	ns
t_{HCKL}	Input HIGH to LOW (pad to R-Cell input)		1.0		1.2		1.4		1.6	ns
t_{HPWH}	Minimum Pulse Width HIGH	1.4		1.6		1.8		2.1		ns
t_{HPWL}	Minimum Pulse Width LOW	1.4		1.6		1.8		2.1		ns
t_{HCKSW}	Maximum Skew		0.1		0.2		0.2		0.2	ns
t_{HP}	Minimum Period	2.7		3.1		3.6		4.2		ns
f_{HMAX}	Maximum Frequency		350		320		280		240	MHz
Routed Array Clock Networks										
t_{RCKH}	Input LOW to HIGH (light load) (pad to R-Cell input)		1.3		1.5		1.7		2.0	ns
t_{RCKL}	Input HIGH to LOW (light load) (pad to R-Cell Input)		1.4		1.6		1.8		2.1	ns
t_{RCKH}	Input LOW to HIGH (50% load) (pad to R-Cell input)		1.4		1.7		1.9		2.2	ns
t_{RCKL}	Input HIGH to LOW (50% load) (pad to R-Cell input)		1.5		1.7		2.0		2.3	ns
t_{RCKH}	Input LOW to HIGH (100% load) (pad to R-Cell input)		1.5		1.7		1.9		2.2	ns
t_{RCKL}	Input HIGH to LOW (100% load) (pad to R-Cell input)		1.5		1.8		2.0		2.3	ns
t_{RPWH}	Min. Pulse Width HIGH	2.1		2.4		2.7		3.2		ns
t_{RPWL}	Min. Pulse Width LOW	2.1		2.4		2.7		3.2		ns
t_{RCKSW}	Maximum Skew (light load)		0.1		0.2		0.2		0.2	ns
t_{RCKSW}	Maximum Skew (50% load)		0.3		0.3		0.4		0.4	ns
t_{RCKSW}	Maximum Skew (100% load)		0.3		0.3		0.4		0.4	ns
TTL Output Module Timing1										
t_{DLH}	Data-to-Pad LOW to HIGH		1.6		1.9		2.1		2.5	ns
t_{DHL}	Data-to-Pad HIGH to LOW		1.6		1.9		2.1		2.5	ns
t_{ENZL}	Enable-to-Pad, Z to L		2.1		2.4		2.8		3.2	ns
t_{ENZH}	Enable-to-Pad, Z to H		2.3		2.7		3.1		3.6	ns
t_{ENLZ}	Enable-to-Pad, L to Z		1.4		1.7		1.9		2.2	ns

Note:

1. *For dual-module macros, use $t_{PD} + t_{RD1} + t_{PDn}$, $t_{RCO} + t_{RD1} + t_{PDn}$, or $t_{PD1} + t_{RD1} + t_{SUD}$, whichever is appropriate.*
2. *Routing delays are for typical designs across worst-case operating conditions. These parameters should be used for estimating device performance. Post-route timing analysis or simulation is required to determine actual worst-case performance. Post-route timing is based on actual routing delay measurements performed on the device prior to shipment.*

A54SX16 Timing Characteristics

Table 1-18 • **A54SX16 Timing Characteristics (Worst-Case Commercial Conditions, V_{CCR} = 4.75 V, V_{CCA},V_{CCI} = 3.0 V, T_J = 70°C)**

Parameter	Description	'–3' Speed		'–2' Speed		'–1' Speed		'Std' Speed		Units
		Min.	Max.	Min.	Max.	Min.	Max.	Min.	Max.	
C-Cell Propagation Delays[1]										
t_{PD}	Internal Array Module		0.6		0.7		0.8		0.9	ns
Predicted Routing Delays[2]										
t_{DC}	FO = 1 Routing Delay, Direct Connect		0.1		0.1		0.1		0.1	ns
t_{FC}	FO = 1 Routing Delay, Fast Connect		0.3		0.4		0.4		0.5	ns
t_{RD1}	FO = 1 Routing Delay		0.3		0.4		0.4		0.5	ns
t_{RD2}	FO = 2 Routing Delay		0.6		0.7		0.8		0.9	ns
t_{RD3}	FO = 3 Routing Delay		0.8		0.9		1.0		1.2	ns
t_{RD4}	FO = 4 Routing Delay		1.0		1.2		1.4		1.6	ns
t_{RD8}	FO = 8 Routing Delay		1.9		2.2		2.5		2.9	ns
t_{RD12}	FO = 12 Routing Delay		2.8		3.2		3.7		4.3	ns
R-Cell Timing										
t_{RCO}	Sequential Clock-to-Q		0.8		1.1		1.2		1.4	ns
t_{CLR}	Asynchronous Clear-to-Q		0.5		0.6		0.7		0.8	ns
t_{PRESET}	Asynchronous Preset-to-Q		0.7		0.8		0.9		1.0	ns
t_{SUD}	Flip-Flop Data Input Set-Up	0.5		0.5		0.7		0.8		ns
t_{HD}	Flip-Flop Data Input Hold	0.0		0.0		0.0		0.0		ns
t_{WASYN}	Asynchronous Pulse Width	1.4		1.6		1.8		2.1		ns
Input Module Propagation Delays										
t_{INYH}	Input Data Pad-to-Y HIGH		1.5		1.7		1.9		2.2	ns
t_{INYL}	Input Data Pad-to-Y LOW		1.5		1.7		1.9		2.2	ns
Predicted Input Routing Delays[2]										
t_{IRD1}	FO = 1 Routing Delay		0.3		0.4		0.4		0.5	ns
t_{IRD2}	FO = 2 Routing Delay		0.6		0.7		0.8		0.9	ns
t_{IRD3}	FO = 3 Routing Delay		0.8		0.9		1.0		1.2	ns
t_{IRD4}	FO = 4 Routing Delay		1.0		1.2		1.4		1.6	ns
t_{IRD8}	FO = 8 Routing Delay		1.9		2.2		2.5		2.9	ns
t_{IRD12}	FO = 12 Routing Delay		2.8		3.2		3.7		4.3	ns

Notes:

1. *For dual-module macros, use $t_{PD} + t_{RD1} + t_{PDn}$, $t_{RCO} + t_{RD1} + t_{PDn}$, or $t_{PD1} + t_{RD1} + t_{SUD}$, whichever is appropriate.*
2. *Routing delays are for typical designs across worst-case operating conditions. These parameters should be used for estimating device performance. Post-route timing analysis or simulation is required to determine actual worst-case performance. Post-route timing is based on actual routing delay measurements performed on the device prior to shipment.*
3. *Delays based on 35 pF loading, except t_{ENZL} and t_{ENZH}. For t_{ENZL} and t_{ENZH}, the loading is 5 pF.*

Table 1-18 • **A54SX16 Timing Characteristics (Continued)**
(Worst-Case Commercial Conditions, V_{CCR} = 4.75 V, V_{CCA},V_{CCI} = 3.0 V, T_J = 70°C)

Parameter	Description	'–3' Speed		'–2' Speed		'–1' Speed		'Std' Speed		Units
		Min.	Max.	Min.	Max.	Min.	Max.	Min.	Max.	
Dedicated (Hardwired) Array Clock Network										
t_{HCKH}	Input LOW to HIGH (pad to R-Cell input)		1.2		1.4		1.5		1.8	ns
t_{HCKL}	Input HIGH to LOW (pad to R-Cell input)		1.2		1.4		1.6		1.9	ns
t_{HPWH}	Minimum Pulse Width HIGH	1.4		1.6		1.8		2.1		ns
t_{HPWL}	Minimum Pulse Width LOW	1.4		1.6		1.8		2.1		ns
t_{HCKSW}	Maximum Skew		0.2		0.2		0.3		0.3	ns
t_{HP}	Minimum Period	2.7		3.1		3.6		4.2		ns
f_{HMAX}	Maximum Frequency		350		320		280		240	MHz
Routed Array Clock Networks										
t_{RCKH}	Input LOW to HIGH (light load) (pad to R-Cell input)		1.6		1.8		2.1		2.5	ns
t_{RCKL}	Input HIGH to LOW (light load) (pad to R-Cell input)		1.8		2.0		2.3		2.7	ns
t_{RCKH}	Input LOW to HIGH (50% load) (pad to R-Cell input)		1.8		2.1		2.5		2.8	ns
t_{RCKL}	Input HIGH to LOW (50% load) (pad to R-Cell input)		2.0		2.2		2.5		3.0	ns
t_{RCKH}	Input LOW to HIGH (100% load) (pad to R-Cell input)		1.8		2.1		2.4		2.8	ns
t_{RCKL}	Input HIGH to LOW (100% load) (pad to R-Cell input)		2.0		2.2		2.5		3.0	ns
t_{RPWH}	Min. Pulse Width HIGH	2.1		2.4		2.7		3.2		ns
t_{RPWL}	Min. Pulse Width LOW	2.1		2.4		2.7		3.2		ns
t_{RCKSW}	Maximum Skew (light load)		0.5		0.5		0.5		0.7	ns
t_{RCKSW}	Maximum Skew (50% load)		0.5		0.6		0.7		0.8	ns
t_{RCKSW}	Maximum Skew (100% load)		0.5		0.6		0.7		0.8	ns
TTL Output Module Timing[3]										
t_{DLH}	Data-to-Pad LOW to HIGH		1.6		1.9		2.1		2.5	ns
t_{DHL}	Data-to-Pad HIGH to LOW		1.6		1.9		2.1		2.5	ns
t_{ENZL}	Enable-to-Pad, Z to L		2.1		2.4		2.8		3.2	ns
t_{ENZH}	Enable-to-Pad, Z to H		2.3		2.7		3.1		3.6	ns
t_{ENLZ}	Enable-to-Pad, L to Z		1.4		1.7		1.9		2.2	ns
t_{ENHZ}	Enable-to-Pad, H to Z		1.3		1.5		1.7		2.0	ns

Notes:

1. *For dual-module macros, use $t_{PD} + t_{RD1} + t_{PDn}$, $t_{RCO} + t_{RD1} + t_{PDn}$, or $t_{PD1} + t_{RD1} + t_{SUD}$, whichever is appropriate.*
2. *Routing delays are for typical designs across worst-case operating conditions. These parameters should be used for estimating device performance. Post-route timing analysis or simulation is required to determine actual worst-case performance. Post-route timing is based on actual routing delay measurements performed on the device prior to shipment.*
3. *Delays based on 35 pF loading, except t_{ENZL} and t_{ENZH}. For t_{ENZL} and t_{ENZH}, the loading is 5 pF.*

A54SX16P Timing Characteristics

Table 1-19 • **A54SX16P Timing Characteristics (Worst-Case Commercial Conditions, V_{CCR} = 4.75 V, V_{CCA},V_{CCI} = 3.0 V, T_J = 70°C)**

Parameter	Description	'–3' Speed		'–2' Speed		'–1' Speed		'Std' Speed		Units
		Min.	Max.	Min.	Max.	Min.	Max.	Min.	Max.	
C-Cell Propagation Delays[1]										
t_{PD}	Internal Array Module		0.6		0.7		0.8		0.9	ns
Predicted Routing Delays[2]										
t_{DC}	FO = 1 Routing Delay, Direct Connect		0.1		0.1		0.1		0.1	ns
t_{FC}	FO = 1 Routing Delay, Fast Connect		0.3		0.4		0.4		0.5	ns
t_{RD1}	FO = 1 Routing Delay		0.3		0.4		0.4		0.5	ns
t_{RD2}	FO = 2 Routing Delay		0.6		0.7		0.8		0.9	ns
t_{RD3}	FO = 3 Routing Delay		0.8		0.9		1.0		1.2	ns
t_{RD4}	FO = 4 Routing Delay		1.0		1.2		1.4		1.6	ns
t_{RD8}	FO = 8 Routing Delay		1.9		2.2		2.5		2.9	ns
t_{RD12}	FO = 12 Routing Delay		2.8		3.2		3.7		4.3	ns
R-Cell Timing										
t_{RCO}	Sequential Clock-to-Q		0.9		1.1		1.3		1.4	ns
t_{CLR}	Asynchronous Clear-to-Q		0.5		0.6		0.7		0.8	ns
t_{PRESET}	Asynchronous Preset-to-Q		0.7		0.8		0.9		1.0	ns
t_{SUD}	Flip-Flop Data Input Set-Up	0.5		0.5		0.7		0.8		ns
t_{HD}	Flip-Flop Data Input Hold	0.0		0.0		0.0		0.0		ns
t_{WASYN}	Asynchronous Pulse Width	1.4		1.6		1.8		2.1		ns
Input Module Propagation Delays										
t_{INYH}	Input Data Pad-to-Y HIGH		1.5		1.7		1.9		2.2	ns
t_{INYL}	Input Data Pad-to-Y LOW		1.5		1.7		1.9		2.2	ns
Predicted Input Routing Delays[2]										
t_{IRD1}	FO = 1 Routing Delay		0.3		0.4		0.4		0.5	ns
t_{IRD2}	FO = 2 Routing Delay		0.6		0.7		0.8		0.9	ns
t_{IRD3}	FO = 3 Routing Delay		0.8		0.9		1.0		1.2	ns
t_{IRD4}	FO = 4 Routing Delay		1.0		1.2		1.4		1.6	ns
t_{IRD8}	FO = 8 Routing Delay		1.9		2.2		2.5		2.9	ns
t_{IRD12}	FO = 12 Routing Delay		2.8		3.2		3.7		4.3	ns

Note:

1. *For dual-module macros, use $t_{PD} + t_{RD1} + t_{PDn}$, $t_{RCO} + t_{RD1} + t_{PDn}$, or $t_{PD1} + t_{RD1} + t_{SUD}$, whichever is appropriate.*
2. *Routing delays are for typical designs across worst-case operating conditions. These parameters should be used for estimating device performance. Post-route timing analysis or simulation is required to determine actual worst-case performance. Post-route timing is based on actual routing delay measurements performed on the device prior to shipment.*
3. *Delays based on 10 pF loading.*

Table 1-19 • **A54SX16P Timing Characteristics (Continued)**
(Worst-Case Commercial Conditions, V_{CCR} = 4.75 V, V_{CCA},V_{CCI} = 3.0 V, T_J = 70°C)

Parameter	Description	'–3' Speed		'–2' Speed		'–1' Speed		'Std' Speed		Units
		Min.	Max.	Min.	Max.	Min.	Max.	Min.	Max.	
Dedicated (Hardwired) Array Clock Network										
t_{HCKH}	Input LOW to HIGH (pad to R-Cell input)		1.2		1.4		1.5		1.8	ns
t_{HCKL}	Input HIGH to LOW (pad to R-Cell input)		1.2		1.4		1.6		1.9	ns
t_{HPWH}	Minimum Pulse Width HIGH	1.4		1.6		1.8		2.1		ns
t_{HPWL}	Minimum Pulse Width LOW	1.4		1.6		1.8		2.1		ns
t_{HCKSW}	Maximum Skew		0.2		0.2		0.3		0.3	ns
t_{HP}	Minimum Period	2.7		3.1		3.6		4.2		ns
f_{HMAX}	Maximum Frequency		350		320		280		240	MHz
Routed Array Clock Networks										
t_{RCKH}	Input LOW to HIGH (light load) (pad to R-Cell input)		1.6		1.8		2.1		2.5	ns
t_{RCKL}	Input HIGH to LOW (Light Load) (pad to R-Cell input)		1.8		2.0		2.3		2.7	ns
t_{RCKH}	Input LOW to HIGH (50% load) (pad to R-Cell input)		1.8		2.1		2.5		2.8	ns
t_{RCKL}	Input HIGH to LOW (50% load) (pad to R-Cell input)		2.0		2.2		2.5		3.0	ns
t_{RCKH}	Input LOW to HIGH (100% load) (pad to R-Cell input)		1.8		2.1		2.4		2.8	ns
t_{RCKL}	Input HIGH to LOW (100% load) (pad to R-Cell input)		2.0		2.2		2.5		3.0	ns
t_{RPWH}	Min. Pulse Width HIGH	2.1		2.4		2.7		3.2		ns
t_{RPWL}	Min. Pulse Width LOW	2.1		2.4		2.7		3.2		ns
t_{RCKSW}	Maximum Skew (light load)		0.5		0.5		0.5		0.7	ns
t_{RCKSW}	Maximum Skew (50% load)		0.5		0.6		0.7		0.8	ns
t_{RCKSW}	Maximum Skew (100% load)		0.5		0.6		0.7		0.8	ns
TTL Output Module Timing										
t_{DLH}	Data-to-Pad LOW to HIGH		2.4		2.8		3.1		3.7	ns
t_{DHL}	Data-to-Pad HIGH to LOW		2.3		2.9		3.2		3.8	ns
t_{ENZL}	Enable-to-Pad, Z to L		3.0		3.4		3.9		4.6	ns
t_{ENZH}	Enable-to-Pad, Z to H		3.3		3.8		4.3		5.0	ns
t_{ENLZ}	Enable-to-Pad, L to Z		2.3		2.7		3.0		3.5	ns
t_{ENHZ}	Enable-to-Pad, H to Z		2.8		3.2		3.7		4.3	ns

Note:

1. *For dual-module macros, use $t_{PD} + t_{RD1} + t_{PDn}$, $t_{RCO} + t_{RD1} + t_{PDn}$, or $t_{PD1} + t_{RD1} + t_{SUD}$, whichever is appropriate.*
2. *Routing delays are for typical designs across worst-case operating conditions. These parameters should be used for estimating device performance. Post-route timing analysis or simulation is required to determine actual worst-case performance. Post-route timing is based on actual routing delay measurements performed on the device prior to shipment.*
3. *Delays based on 10 pF loading.*

Table 1-19 • **A54SX16P Timing Characteristics (Continued)**
(Worst-Case Commercial Conditions, V_{CCR} = 4.75 V, V_{CCA},V_{CCI} = 3.0 V, T_J = 70°C)

Parameter	Description	'–3' Speed		'–2' Speed		'–1' Speed		'Std' Speed		Units
		Min.	Max.	Min.	Max.	Min.	Max.	Min.	Max.	
TTL/PCI Output Module Timing										
t_{DLH}	Data-to-Pad LOW to HIGH		1.5		1.7		2.0		2.3	ns
t_{DHL}	Data-to-Pad HIGH to LOW		1.9		2.2		2.4		2.9	ns
t_{ENZL}	Enable-to-Pad, Z to L		2.3		2.6		3.0		3.5	ns
t_{ENZH}	Enable-to-Pad, Z to H		1.5		1.7		1.9		2.3	ns
t_{ENLZ}	Enable-to-Pad, L to Z		2.7		3.1		3.5		4.1	ns
t_{ENHZ}	Enable-to-Pad, H to Z		2.9		3.3		3.7		4.4	ns
PCI Output Module Timing[3]										
t_{DLH}	Data-to-Pad LOW to HIGH		1.8		2.0		2.3		2.7	ns
t_{DHL}	Data-to-Pad HIGH to LOW		1.7		2.0		2.2		2.6	ns
t_{ENZL}	Enable-to-Pad, Z to L		0.8		1.0		1.1		1.3	ns
t_{ENZH}	Enable-to-Pad, Z to H		1.2		1.2		1.5		1.8	ns
t_{ENLZ}	Enable-to-Pad, L to Z		1.0		1.1		1.3		1.5	ns
t_{ENHZ}	Enable-to-Pad, H to Z		1.1		1.3		1.5		1.7	ns
TTL Output Module Timing										
t_{DLH}	Data-to-Pad LOW to HIGH		2.1		2.5		2.8		3.3	ns
t_{DHL}	Data-to-Pad HIGH to LOW		2.0		2.3		2.6		3.1	ns
t_{ENZL}	Enable-to-Pad, Z to L		2.5		2.9		3.2		3.8	ns
t_{ENZH}	Enable-to-Pad, Z to H		3.0		3.5		3.9		4.6	ns
t_{ENLZ}	Enable-to-Pad, L to Z		2.3		2.7		3.1		3.6	ns
t_{ENHZ}	Enable-to-Pad, H to Z		2.9		3.3		3.7		4.4	ns

Note:

1. *For dual-module macros, use $t_{PD} + t_{RD1} + t_{PDn}$, $t_{RCO} + t_{RD1} + t_{PDn}$, or $t_{PD1} + t_{RD1} + t_{SUD}$, whichever is appropriate.*
2. *Routing delays are for typical designs across worst-case operating conditions. These parameters should be used for estimating device performance. Post-route timing analysis or simulation is required to determine actual worst-case performance. Post-route timing is based on actual routing delay measurements performed on the device prior to shipment.*
3. *Delays based on 10 pF loading.*

A54SX32 Timing Characteristics

Table 1-20 • **A54SX32 Timing Characteristics (Worst-Case Commercial Conditions, V_{CCR}= 4.75 V, V_{CCA},V_{CCI} = 3.0 V, T_J = 70°C)**

Parameter	Description	'–3' Speed		'–2' Speed		'–1' Speed		'Std' Speed		Units
		Min.	Max.	Min.	Max.	Min.	Max.	Min.	Max.	
C-Cell Propagation Delays[1]										
t_{PD}	Internal Array Module		0.6		0.7		0.8		0.9	ns
Predicted Routing Delays[2]										
t_{DC}	FO = 1 Routing Delay, Direct Connect		0.1		0.1		0.1		0.1	ns
t_{FC}	FO = 1 Routing Delay, Fast Connect		0.3		0.4		0.4		0.5	ns
t_{RD1}	FO = 1 Routing Delay		0.3		0.4		0.4		0.5	ns
t_{RD2}	FO = 2 Routing Delay		0.7		0.8		0.9		1.0	ns
t_{RD3}	FO = 3 Routing Delay		1.0		1.2		1.4		1.6	ns
t_{RD4}	FO = 4 Routing Delay		1.4		1.6		1.8		2.1	ns
t_{RD8}	FO = 8 Routing Delay		2.7		3.1		3.5		4.1	ns
t_{RD12}	FO = 12 Routing Delay		4.0		4.7		5.3		6.2	ns
R-Cell Timing										
t_{RCO}	Sequential Clock-to-Q		0.8		1.1		1.3		1.4	ns
t_{CLR}	Asynchronous Clear-to-Q		0.5		0.6		0.7		0.8	ns
t_{PRESET}	Asynchronous Preset-to-Q		0.7		0.8		0.9		1.0	ns
t_{SUD}	Flip-Flop Data Input Set-Up	0.5		0.6		0.7		0.8		ns
t_{HD}	Flip-Flop Data Input Hold	0.0		0.0		0.0		0.0		ns
t_{WASYN}	Asynchronous Pulse Width	1.4		1.6		1.8		2.1		ns
Input Module Propagation Delays										
t_{INYH}	Input Data Pad-to-Y HIGH		1.5		1.7		1.9		2.2	ns
t_{INYL}	Input Data Pad-to-Y LOW		1.5		1.7		1.9		2.2	ns
Predicted Input Routing Delays[2]										
t_{IRD1}	FO = 1 Routing Delay		0.3		0.4		0.4		0.5	ns
t_{IRD2}	FO = 2 Routing Delay		0.7		0.8		0.9		1.0	ns
t_{IRD3}	FO = 3 Routing Delay		1.0		1.2		1.4		1.6	ns
t_{IRD4}	FO = 4 Routing Delay		1.4		1.6		1.8		2.1	ns
t_{IRD8}	FO = 8 Routing Delay		2.7		3.1		3.5		4.1	ns
t_{IRD12}	FO = 12 Routing Delay		4.0		4.7		5.3		6.2	ns

Note:

1. *For dual-module macros, use $t_{PD} + t_{RD1} + t_{PDn}$, $t_{RCO} + t_{RD1} + t_{PDn}$, or $t_{PD1} + t_{RD1} + t_{SUD}$, whichever is appropriate.*
2. *Routing delays are for typical designs across worst-case operating conditions. These parameters should be used for estimating device performance. Post-route timing analysis or simulation is required to determine actual worst-case performance. Post-route timing is based on actual routing delay measurements performed on the device prior to shipment.*
3. *Delays based on 35 pF loading, except t_{ENZL} and t_{ENZH}. For t_{ENZL} and t_{ENZH} the loading is 5 pF.*

Table 1-20 • **A54SX32 Timing Characteristics (Continued)**
(Worst-Case Commercial Conditions, V_{CCR}= 4.75 V, V_{CCA},V_{CCI} = 3.0 V, T_J = 70°C)

Parameter	Description	'–3' Speed		'–2' Speed		'–1' Speed		'Std' Speed		Units
		Min.	Max.	Min.	Max.	Min.	Max.	Min.	Max.	
Dedicated (Hardwired) Array Clock Network										
t_{HCKH}	Input LOW to HIGH (pad to R-Cell input)		1.9		2.1		2.4		2.8	ns
t_{HCKL}	Input HIGH to LOW (pad to R-Cell input)		1.9		2.1		2.4		2.8	ns
t_{HPWH}	Minimum Pulse Width HIGH	1.4		1.6		1.8		2.1		ns
t_{HPWL}	Minimum Pulse Width LOW	1.4		1.6		1.8		2.1		ns
t_{HCKSW}	Maximum Skew		0.3		0.4		0.4		0.5	ns
t_{HP}	Minimum Period	2.7		3.1		3.6		4.2		ns
f_{HMAX}	Maximum Frequency		350		320		280		240	MHz
Routed Array Clock Networks										
t_{RCKH}	Input LOW to HIGH (light load) (pad to R-Cell input)		2.4		2.7		3.0		3.5	ns
t_{RCKL}	Input HIGH to LOW (light load) (pad to R-Cell input)		2.4		2.7		3.1		3.6	ns
t_{RCKH}	Input LOW to HIGH (50% load) (pad to R-Cell input)		2.7		3.0		3.5		4.1	ns
t_{RCKL}	Input HIGH to LOW (50% load) (pad to R-Cell input)		2.7		3.1		3.6		4.2	ns
t_{RCKH}	Input LOW to HIGH (100% load) (pad to R-Cell input)		2.7		3.1		3.5		4.1	ns
t_{RCKL}	Input HIGH to LOW (100% load) (pad to R-Cell input)		2.8		3.2		3.6		4.3	ns
t_{RPWH}	Min. Pulse Width HIGH	2.1		2.4		2.7		3.2		ns
t_{RPWL}	Min. Pulse Width LOW	2.1		2.4		2.7		3.2		ns
t_{RCKSW}	Maximum Skew (light load)		0.85		0.98		1.1		1.3	ns
t_{RCKSW}	Maximum Skew (50% load)		1.23		1.4		1.6		1.9	ns
t_{RCKSW}	Maximum Skew (100% load)		1.30		1.5		1.7		2.0	ns
TTL Output Module Timing[3]										
t_{DLH}	Data-to-Pad LOW to HIGH		1.6		1.9		2.1		2.5	ns
t_{DHL}	Data-to-Pad HIGH to LOW		1.6		1.9		2.1		2.5	ns
t_{ENZL}	Enable-to-Pad, Z to L		2.1		2.4		2.8		3.2	ns
t_{ENZH}	Enable-to-Pad, Z to H		2.3		2.7		3.1		3.6	ns
t_{ENLZ}	Enable-to-Pad, L to Z		1.4		1.7		1.9		2.2	ns
t_{ENHZ}	Enable-to-Pad, H to Z		1.3		1.5		1.7		2.0	ns

Note:

1. *For dual-module macros, use t_{PD} + t_{RD1} + t_{PDn}, t_{RCO} + t_{RD1} + t_{PDn}, or t_{PD1} + t_{RD1} + t_{SUD}, whichever is appropriate.*
2. *Routing delays are for typical designs across worst-case operating conditions. These parameters should be used for estimating device performance. Post-route timing analysis or simulation is required to determine actual worst-case performance. Post-route timing is based on actual routing delay measurements performed on the device prior to shipment.*
3. *Delays based on 35 pF loading, except t_{ENZL} and t_{ENZH}. For t_{ENZL} and t_{ENZH} the loading is 5 pF.*

Pin Description

CLKA/B **Clock A and B**

These pins are 3.3 V / 5.0 V PCI/TTL clock inputs for clock distribution networks. The clock input is buffered prior to clocking the R-cells. If not used, this pin must be set LOW or HIGH on the board. It must not be left floating. (For A54SX72A, these clocks can be configured as bidirectional.)

GND **Ground**

LOW supply voltage.

HCLK **Dedicated (hardwired) Array Clock**

This pin is the 3.3 V / 5.0 V PCI/TTL clock input for sequential modules. This input is directly wired to each R-cell and offers clock speeds independent of the number of R-cells being driven. If not used, this pin must be set LOW or HIGH on the board. It must not be left floating.

I/O **Input/Output**

The I/O pin functions as an input, output, tristate, or bidirectional buffer. Based on certain configurations, input and output levels are compatible with standard TTL, LVTTL, 3.3 V PCI or 5.0 V PCI specifications. Unused I/O pins are automatically tristated by the Designer Series software.

NC **No Connection**

This pin is not connected to circuitry within the device.

PRA, I/O **Probe A**

The Probe A pin is used to output data from any user-defined design node within the device. This independent diagnostic pin can be used in conjunction with the Probe B pin to allow real-time diagnostic output of any signal path within the device. The Probe A pin can be used as a user-defined I/O when verification has been completed. The pin's probe capabilities can be permanently disabled to protect programmed design confidentiality.

PRB, I/O **Probe B**

The Probe B pin is used to output data from any node within the device. This diagnostic pin can be used in conjunction with the Probe A pin to allow real-time diagnostic output of any signal path within the device. The Probe B pin can be used as a user-defined I/O when verification has been completed. The pin's probe capabilities can be permanently disabled to protect programmed design confidentiality.

TCK **Test Clock**

Test clock input for diagnostic probe and device programming. In flexible mode, TCK becomes active when the TMS pin is set LOW (refer to Table 1-2 on page 1-6). This pin functions as an I/O when the boundary scan state machine reaches the "logic reset" state.

TDI **Test Data Input**

Serial input for boundary scan testing and diagnostic probe. In flexible mode, TDI is active when the TMS pin is set LOW (refer to Table 1-2 on page 1-6). This pin functions as an I/O when the boundary scan state machine reaches the "logic reset" state.

TDO **Test Data Output**

Serial output for boundary scan testing. In flexible mode, TDO is active when the TMS pin is set LOW (refer to Table 1-2 on page 1-6). This pin functions as an I/O when the boundary scan state machine reaches the "logic reset" state.

TMS **Test Mode Select**

The TMS pin controls the use of the IEEE 1149.1 Boundary Scan pins (TCK, TDI, TDO). In flexible mode when the TMS pin is set LOW, the TCK, TDI, and TDO pins are boundary scan pins (refer to Table 1-2 on page 1-6). Once the boundary scan pins are in test mode, they will remain in that mode until the internal boundary scan state machine reaches the "logic reset" state. At this point, the boundary scan pins will be released and will function as regular I/O pins. The "logic reset" state is reached 5 TCK cycles after the TMS pin is set HIGH. In dedicated test mode, TMS functions as specified in the IEEE 1149.1 specifications.

V_{CCI} **Supply Voltage**

Supply voltage for I/Os. See Table 1-1 on page 1-5.

V_{CCA} **Supply Voltage**

Supply voltage for Array. See Table 1-1 on page 1-5.

V_{CCR} **Supply Voltage**

Supply voltage for input tolerance (required for internal biasing). See Table 1-1 on page 1-5.

Package Pin Assignments

84-Pin PLCC

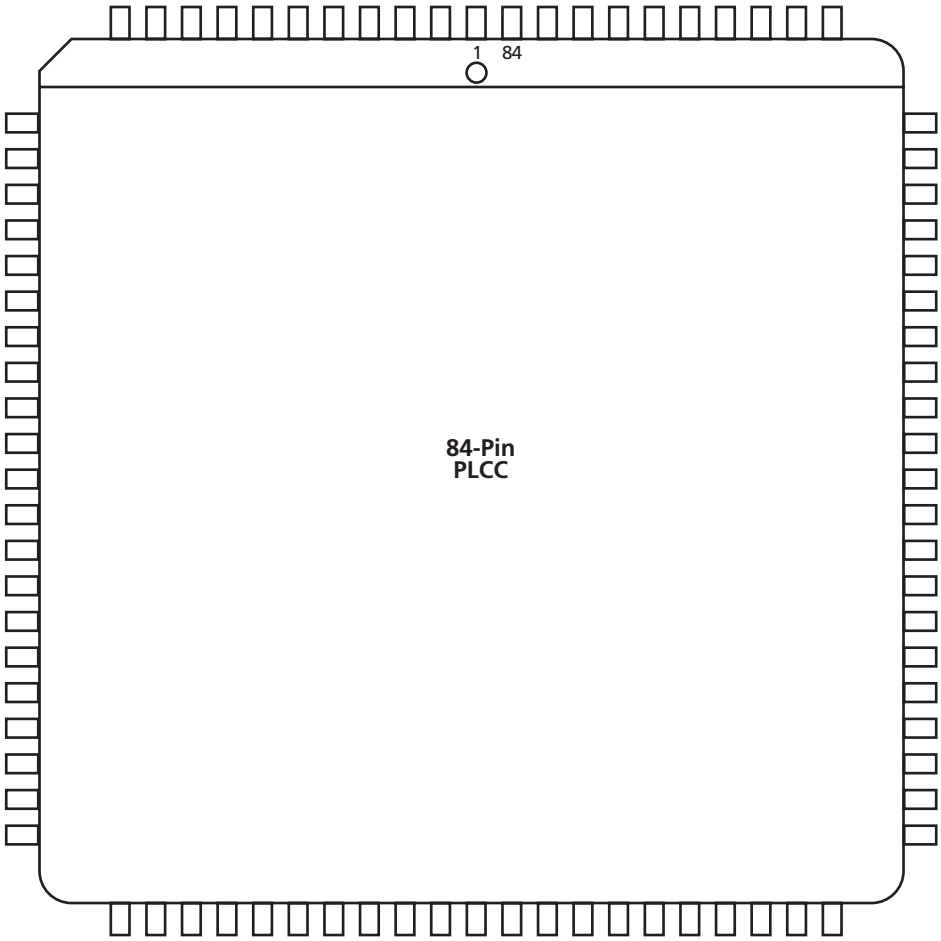

Figure 2-1 • **84-Pin PLCC (Top View)**

Note

For Package Manufacturing and Environmental information, visit the Package Resource center at http://www.actel.com/products/rescenter/package/index.html.

84-Pin PLCC	
Pin Number	**A54SX08 Function**
1	V_{CCR}
2	GND
3	V_{CCA}
4	PRA, I/O
5	I/O
6	I/O
7	V_{CCI}
8	I/O
9	I/O
10	I/O
11	TCK, I/O
12	TDI, I/O
13	I/O
14	I/O
15	I/O
16	TMS
17	I/O
18	I/O
19	I/O
20	I/O
21	I/O
22	I/O
23	I/O
24	I/O
25	I/O
26	I/O
27	GND
28	V_{CCI}
29	I/O
30	I/O
31	I/O
32	I/O
33	I/O
34	I/O
35	I/O

84-Pin PLCC	
Pin Number	**A54SX08 Function**
36	I/O
37	I/O
38	I/O
39	I/O
40	PRB, I/O
41	V_{CCA}
42	GND
43	V_{CCR}
44	I/O
45	HCLK
46	I/O
47	I/O
48	I/O
49	I/O
50	I/O
51	I/O
52	TDO, I/O
53	I/O
54	I/O
55	I/O
56	I/O
57	I/O
58	I/O
59	V_{CCA}
60	V_{CCI}
61	GND
62	I/O
63	I/O
64	I/O
65	I/O
66	I/O
67	I/O
68	V_{CCA}
69	GND
70	I/O

84-Pin PLCC	
Pin Number	**A54SX08 Function**
71	I/O
72	I/O
73	I/O
74	I/O
75	I/O
76	I/O
77	I/O
78	I/O
79	I/O
80	I/O
81	I/O
82	I/O
83	CLKA
84	CLKB

208-Pin PQFP

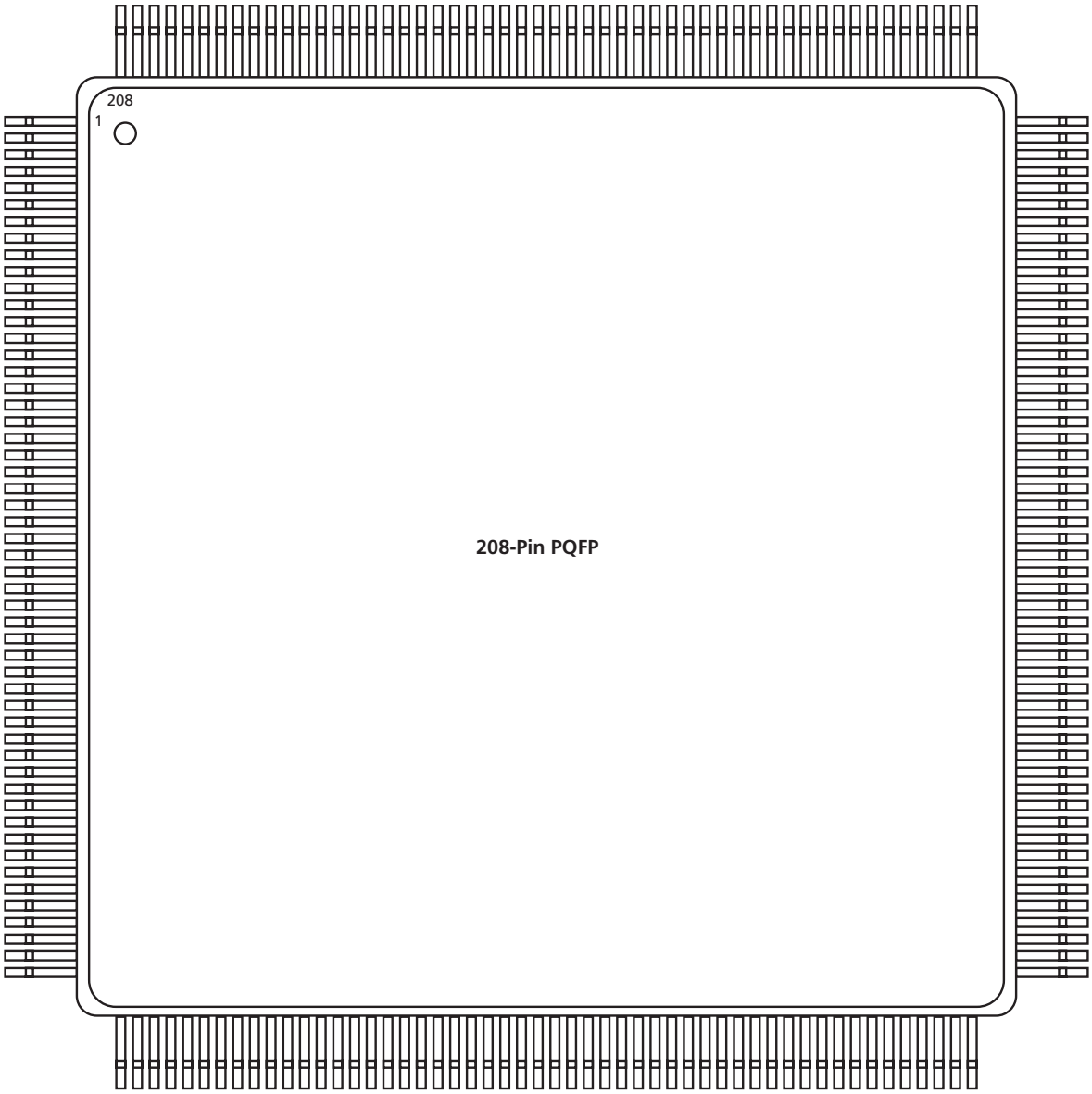

Figure 2-2 • **208-Pin PQFP (Top View)**

Note

For Package Manufacturing and Environmental information, visit the Package Resource center at http://www.actel.com/products/rescenter/package/index.html.

208-Pin PQFP			
Pin Number	**A54SX08 Function**	**A54SX16, A54SX16P Function**	**A54SX32 Function**
1	GND	GND	GND
2	TDI, I/O	TDI, I/O	TDI, I/O
3	I/O	I/O	I/O
4	NC	I/O	I/O
5	I/O	I/O	I/O
6	NC	I/O	I/O
7	I/O	I/O	I/O
8	I/O	I/O	I/O
9	I/O	I/O	I/O
10	I/O	I/O	I/O
11	TMS	TMS	TMS
12	V_{CCI}	V_{CCI}	V_{CCI}
13	I/O	I/O	I/O
14	NC	I/O	I/O
15	I/O	I/O	I/O
16	I/O	I/O	I/O
17	NC	I/O	I/O
18	I/O	I/O	I/O
19	I/O	I/O	I/O
20	NC	I/O	I/O
21	I/O	I/O	I/O
22	I/O	I/O	I/O
23	NC	I/O	I/O
24	I/O	I/O	I/O
25	V_{CCR}	V_{CCR}	V_{CCR}
26	GND	GND	GND
27	V_{CCA}	V_{CCA}	V_{CCA}
28	GND	GND	GND
29	I/O	I/O	I/O
30	I/O	I/O	I/O
31	NC	I/O	I/O
32	I/O	I/O	I/O
33	I/O	I/O	I/O
34	I/O	I/O	I/O
35	NC	I/O	I/O
36	I/O	I/O	I/O

208-Pin PQFP			
Pin Number	**A54SX08 Function**	**A54SX16, A54SX16P Function**	**A54SX32 Function**
37	I/O	I/O	I/O
38	I/O	I/O	I/O
39	NC	I/O	I/O
40	V_{CCI}	V_{CCI}	V_{CCI}
41	V_{CCA}	V_{CCA}	V_{CCA}
42	I/O	I/O	I/O
43	I/O	I/O	I/O
44	I/O	I/O	I/O
45	I/O	I/O	I/O
46	I/O	I/O	I/O
47	I/O	I/O	I/O
48	NC	I/O	I/O
49	I/O	I/O	I/O
50	NC	I/O	I/O
51	I/O	I/O	I/O
52	GND	GND	GND
53	I/O	I/O	I/O
54	I/O	I/O	I/O
55	I/O	I/O	I/O
56	I/O	I/O	I/O
57	I/O	I/O	I/O
58	I/O	I/O	I/O
59	I/O	I/O	I/O
60	V_{CCI}	V_{CCI}	V_{CCI}
61	NC	I/O	I/O
62	I/O	I/O	I/O
63	I/O	I/O	I/O
64	NC	I/O	I/O
65*	I/O	I/O	NC*
66	I/O	I/O	I/O
67	NC	I/O	I/O
68	I/O	I/O	I/O
69	I/O	I/O	I/O
70	NC	I/O	I/O
71	I/O	I/O	I/O
72	I/O	I/O	I/O

Note: ** Note that Pin 65 in the A54SX32—PQ208 is a no connect (NC).*

208-Pin PQFP			
Pin Number	A54SX08 Function	A54SX16, A54SX16P Function	A54SX32 Function
73	NC	I/O	I/O
74	I/O	I/O	I/O
75	NC	I/O	I/O
76	PRB, I/O	PRB, I/O	PRB, I/O
77	GND	GND	GND
78	V_{CCA}	V_{CCA}	V_{CCA}
79	GND	GND	GND
80	V_{CCR}	V_{CCR}	V_{CCR}
81	I/O	I/O	I/O
82	HCLK	HCLK	HCLK
83	I/O	I/O	I/O
84	I/O	I/O	I/O
85	NC	I/O	I/O
86	I/O	I/O	I/O
87	I/O	I/O	I/O
88	NC	I/O	I/O
89	I/O	I/O	I/O
90	I/O	I/O	I/O
91	NC	I/O	I/O
92	I/O	I/O	I/O
93	I/O	I/O	I/O
94	NC	I/O	I/O
95	I/O	I/O	I/O
96	I/O	I/O	I/O
97	NC	I/O	I/O
98	V_{CCI}	V_{CCI}	V_{CCI}
99	I/O	I/O	I/O
100	I/O	I/O	I/O
101	I/O	I/O	I/O
102	I/O	I/O	I/O
103	TDO, I/O	TDO, I/O	TDO, I/O
104	I/O	I/O	I/O
105	GND	GND	GND
106	NC	I/O	I/O
107	I/O	I/O	I/O
108	NC	I/O	I/O

208-Pin PQFP			
Pin Number	A54SX08 Function	A54SX16, A54SX16P Function	A54SX32 Function
109	I/O	I/O	I/O
110	I/O	I/O	I/O
111	I/O	I/O	I/O
112	I/O	I/O	I/O
113	I/O	I/O	I/O
114	V_{CCA}	V_{CCA}	V_{CCA}
115	V_{CCI}	V_{CCI}	V_{CCI}
116	NC	I/O	I/O
117	I/O	I/O	I/O
118	I/O	I/O	I/O
119	NC	I/O	I/O
120	I/O	I/O	I/O
121	I/O	I/O	I/O
122	NC	I/O	I/O
123	I/O	I/O	I/O
124	I/O	I/O	I/O
125	NC	I/O	I/O
126	I/O	I/O	I/O
127	I/O	I/O	I/O
128	I/O	I/O	I/O
129	GND	GND	GND
130	V_{CCA}	V_{CCA}	V_{CCA}
131	GND	GND	GND
132	V_{CCR}	V_{CCR}	V_{CCR}
133	I/O	I/O	I/O
134	I/O	I/O	I/O
135	NC	I/O	I/O
136	I/O	I/O	I/O
137	I/O	I/O	I/O
138	NC	I/O	I/O
139	I/O	I/O	I/O
140	I/O	I/O	I/O
141	NC	I/O	I/O
142	I/O	I/O	I/O
143	NC	I/O	I/O
144	I/O	I/O	I/O

Note: ** Note that Pin 65 in the A54SX32—PQ208 is a no connect (NC).*

208-Pin PQFP			
Pin Number	**A54SX08 Function**	**A54SX16, A54SX16P Function**	**A54SX32 Function**
145	V_{CCA}	V_{CCA}	V_{CCA}
146	GND	GND	GND
147	I/O	I/O	I/O
148	V_{CCI}	V_{CCI}	V_{CCI}
149	I/O	I/O	I/O
150	I/O	I/O	I/O
151	I/O	I/O	I/O
152	I/O	I/O	I/O
153	I/O	I/O	I/O
154	I/O	I/O	I/O
155	NC	I/O	I/O
156	NC	I/O	I/O
157	GND	GND	GND
158	I/O	I/O	I/O
159	I/O	I/O	I/O
160	I/O	I/O	I/O
161	I/O	I/O	I/O
162	I/O	I/O	I/O
163	I/O	I/O	I/O
164	V_{CCI}	V_{CCI}	V_{CCI}
165	I/O	I/O	I/O
166	I/O	I/O	I/O
167	NC	I/O	I/O
168	I/O	I/O	I/O
169	I/O	I/O	I/O
170	NC	I/O	I/O
171	I/O	I/O	I/O
172	I/O	I/O	I/O
173	NC	I/O	I/O
174	I/O	I/O	I/O
175	I/O	I/O	I/O
176	NC	I/O	I/O
177	I/O	I/O	I/O
178	I/O	I/O	I/O
179	I/O	I/O	I/O
180	CLKA	CLKA	CLKA

208-Pin PQFP			
Pin Number	**A54SX08 Function**	**A54SX16, A54SX16P Function**	**A54SX32 Function**
181	CLKB	CLKB	CLKB
182	V_{CCR}	V_{CCR}	V_{CCR}
183	GND	GND	GND
184	V_{CCA}	V_{CCA}	V_{CCA}
185	GND	GND	GND
186	PRA, I/O	PRA, I/O	PRA, I/O
187	I/O	I/O	I/O
188	I/O	I/O	I/O
189	NC	I/O	I/O
190	I/O	I/O	I/O
191	I/O	I/O	I/O
192	NC	I/O	I/O
193	I/O	I/O	I/O
194	I/O	I/O	I/O
195	NC	I/O	I/O
196	I/O	I/O	I/O
197	I/O	I/O	I/O
198	NC	I/O	I/O
199	I/O	I/O	I/O
200	I/O	I/O	I/O
201	V_{CCI}	V_{CCI}	V_{CCI}
202	NC	I/O	I/O
203	NC	I/O	I/O
204	I/O	I/O	I/O
205	NC	I/O	I/O
206	I/O	I/O	I/O
207	I/O	I/O	I/O
208	TCK, I/O	TCK, I/O	TCK, I/O

Note: ** Note that Pin 65 in the A54SX32—PQ208 is a no connect (NC).*

144-Pin TQFP

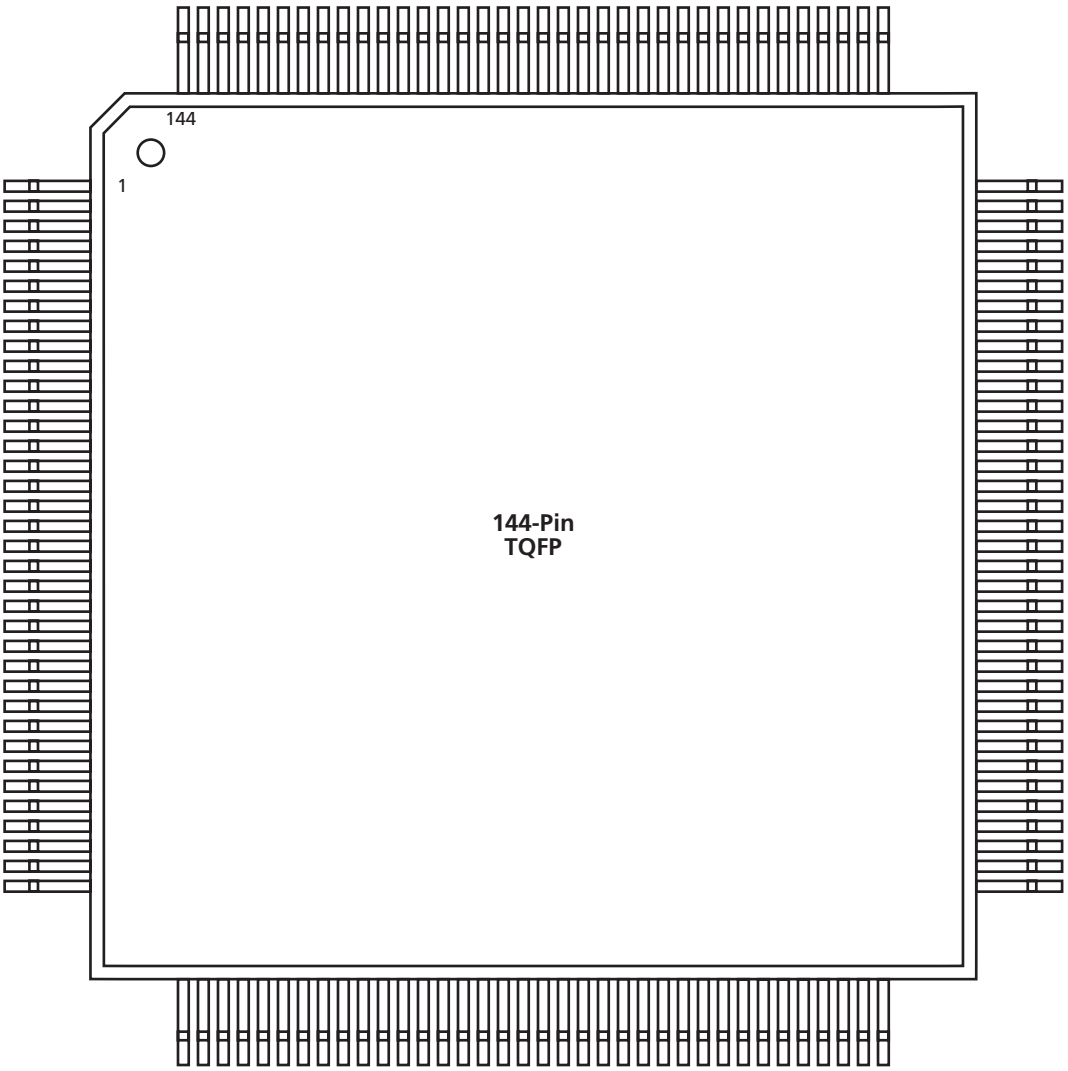

Figure 2-3 • **144-Pin TQFP (Top View)**

Note

For Package Manufacturing and Environmental information, visit the Package Resource center at http://www.actel.com/products/rescenter/package/index.html.

144-Pin TQFP			
Pin Number	A54SX08 Function	A54SX16P Function	A54SX32 Function
1	GND	GND	GND
2	TDI, I/O	TDI, I/O	TDI, I/O
3	I/O	I/O	I/O
4	I/O	I/O	I/O
5	I/O	I/O	I/O
6	I/O	I/O	I/O
7	I/O	I/O	I/O
8	I/O	I/O	I/O
9	TMS	TMS	TMS
10	V_{CCI}	V_{CCI}	V_{CCI}
11	GND	GND	GND
12	I/O	I/O	I/O
13	I/O	I/O	I/O
14	I/O	I/O	I/O
15	I/O	I/O	I/O
16	I/O	I/O	I/O
17	I/O	I/O	I/O
18	I/O	I/O	I/O
19	V_{CCR}	V_{CCR}	V_{CCR}
20	V_{CCA}	V_{CCA}	V_{CCA}
21	I/O	I/O	I/O
22	I/O	I/O	I/O
23	I/O	I/O	I/O
24	I/O	I/O	I/O
25	I/O	I/O	I/O
26	I/O	I/O	I/O
27	I/O	I/O	I/O
28	GND	GND	GND
29	V_{CCI}	V_{CCI}	V_{CCI}
30	V_{CCA}	V_{CCA}	V_{CCA}
31	I/O	I/O	I/O
32	I/O	I/O	I/O
33	I/O	I/O	I/O
34	I/O	I/O	I/O
35	I/O	I/O	I/O
36	GND	GND	GND

144-Pin TQFP			
Pin Number	A54SX08 Function	A54SX16P Function	A54SX32 Function
37	I/O	I/O	I/O
38	I/O	I/O	I/O
39	I/O	I/O	I/O
40	I/O	I/O	I/O
41	I/O	I/O	I/O
42	I/O	I/O	I/O
43	I/O	I/O	I/O
44	V_{CCI}	V_{CCI}	V_{CCI}
45	I/O	I/O	I/O
46	I/O	I/O	I/O
47	I/O	I/O	I/O
48	I/O	I/O	I/O
49	I/O	I/O	I/O
50	I/O	I/O	I/O
51	I/O	I/O	I/O
52	I/O	I/O	I/O
53	I/O	I/O	I/O
54	PRB, I/O	PRB, I/O	PRB, I/O
55	I/O	I/O	I/O
56	V_{CCA}	V_{CCA}	V_{CCA}
57	GND	GND	GND
58	V_{CCR}	V_{CCR}	V_{CCR}
59	I/O	I/O	I/O
60	HCLK	HCLK	HCLK
61	I/O	I/O	I/O
62	I/O	I/O	I/O
63	I/O	I/O	I/O
64	I/O	I/O	I/O
65	I/O	I/O	I/O
66	I/O	I/O	I/O
67	I/O	I/O	I/O
68	V_{CCI}	V_{CCI}	V_{CCI}
69	I/O	I/O	I/O
70	I/O	I/O	I/O
71	TDO, I/O	TDO, I/O	TDO, I/O
72	I/O	I/O	I/O

144-Pin TQFP			
Pin Number	A54SX08 Function	A54SX16P Function	A54SX32 Function
73	GND	GND	GND
74	I/O	I/O	I/O
75	I/O	I/O	I/O
76	I/O	I/O	I/O
77	I/O	I/O	I/O
78	I/O	I/O	I/O
79	V_{CCA}	V_{CCA}	V_{CCA}
80	V_{CCI}	V_{CCI}	V_{CCI}
81	GND	GND	GND
82	I/O	I/O	I/O
83	I/O	I/O	I/O
84	I/O	I/O	I/O
85	I/O	I/O	I/O
86	I/O	I/O	I/O
87	I/O	I/O	I/O
88	I/O	I/O	I/O
89	V_{CCA}	V_{CCA}	V_{CCA}
90	V_{CCR}	V_{CCR}	V_{CCR}
91	I/O	I/O	I/O
92	I/O	I/O	I/O
93	I/O	I/O	I/O
94	I/O	I/O	I/O
95	I/O	I/O	I/O
96	I/O	I/O	I/O
97	I/O	I/O	I/O
98	V_{CCA}	V_{CCA}	V_{CCA}
99	GND	GND	GND
100	I/O	I/O	I/O
101	GND	GND	GND
102	V_{CCI}	V_{CCI}	V_{CCI}
103	I/O	I/O	I/O
104	I/O	I/O	I/O
105	I/O	I/O	I/O
106	I/O	I/O	I/O
107	I/O	I/O	I/O
108	I/O	I/O	I/O

144-Pin TQFP			
Pin Number	A54SX08 Function	A54SX16P Function	A54SX32 Function
109	GND	GND	GND
110	I/O	I/O	I/O
111	I/O	I/O	I/O
112	I/O	I/O	I/O
113	I/O	I/O	I/O
114	I/O	I/O	I/O
115	V_{CCI}	V_{CCI}	V_{CCI}
116	I/O	I/O	I/O
117	I/O	I/O	I/O
118	I/O	I/O	I/O
119	I/O	I/O	I/O
120	I/O	I/O	I/O
121	I/O	I/O	I/O
122	I/O	I/O	I/O
123	I/O	I/O	I/O
124	I/O	I/O	I/O
125	CLKA	CLKA	CLKA
126	CLKB	CLKB	CLKB
127	V_{CCR}	V_{CCR}	V_{CCR}
128	GND	GND	GND
129	V_{CCA}	V_{CCA}	V_{CCA}
130	I/O	I/O	I/O
131	PRA, I/O	PRA, I/O	PRA, I/O
132	I/O	I/O	I/O
133	I/O	I/O	I/O
134	I/O	I/O	I/O
135	I/O	I/O	I/O
136	I/O	I/O	I/O
137	I/O	I/O	I/O
138	I/O	I/O	I/O
139	I/O	I/O	I/O
140	V_{CCI}	V_{CCI}	V_{CCI}
141	I/O	I/O	I/O
142	I/O	I/O	I/O
143	I/O	I/O	I/O
144	TCK, I/O	TCK, I/O	TCK, I/O

176-Pin TQFP

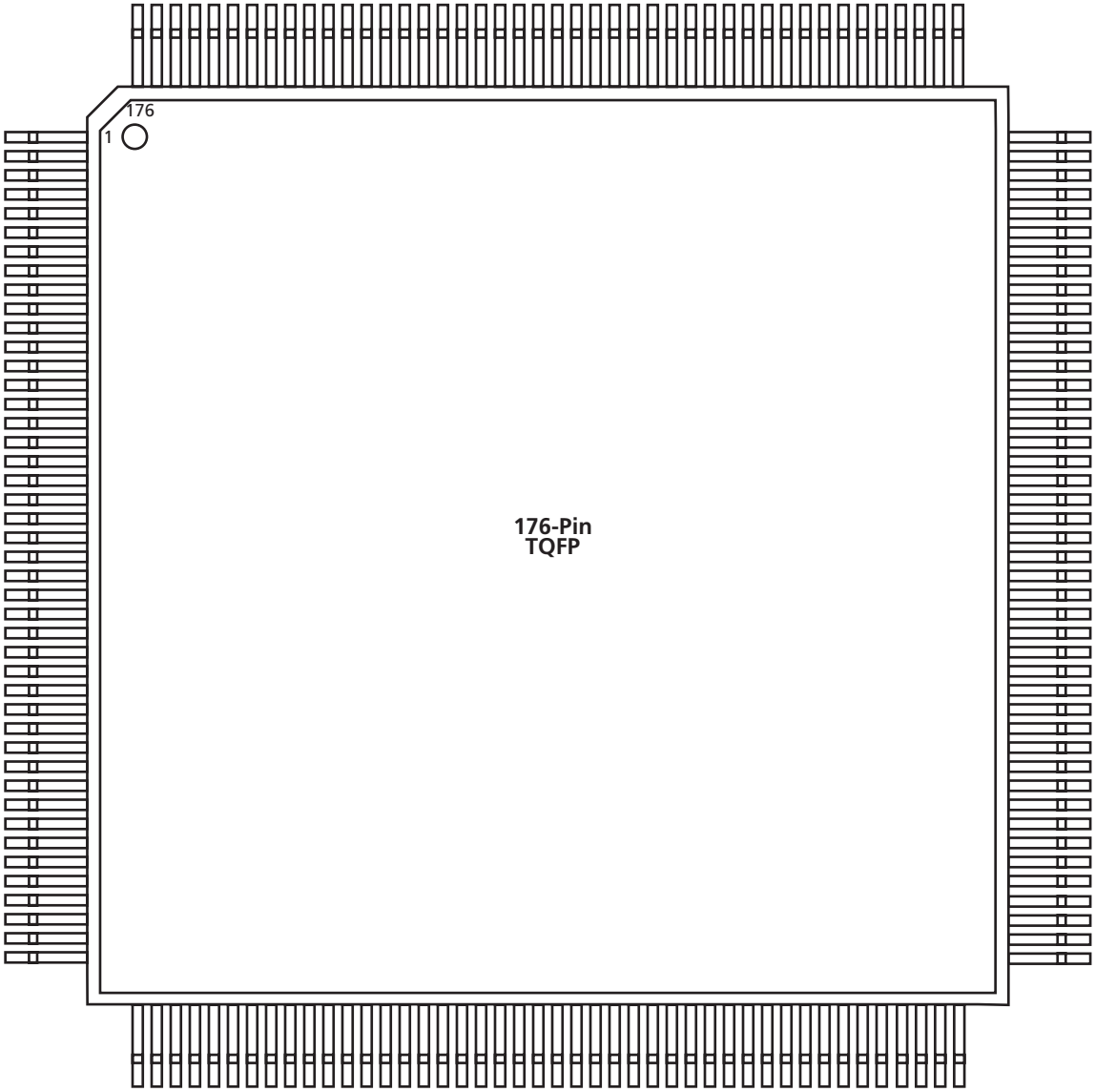

Figure 2-4 • **176-Pin TQFP (Top View)**

Note

For Package Manufacturing and Environmental information, visit the Package Resource center at http://www.actel.com/products/rescenter/package/index.html.

176-Pin TQFP			
Pin Number	A54SX08 Function	A54SX16, A54SX16P Function	A54SX32 Function
1	GND	GND	GND
2	TDI, I/O	TDI, I/O	TDI, I/O
3	NC	I/O	I/O
4	I/O	I/O	I/O
5	I/O	I/O	I/O
6	I/O	I/O	I/O
7	I/O	I/O	I/O
8	I/O	I/O	I/O
9	I/O	I/O	I/O
10	TMS	TMS	TMS
11	V_{CCI}	V_{CCI}	V_{CCI}
12	NC	I/O	I/O
13	I/O	I/O	I/O
14	I/O	I/O	I/O
15	I/O	I/O	I/O
16	I/O	I/O	I/O
17	I/O	I/O	I/O
18	I/O	I/O	I/O
19	I/O	I/O	I/O
20	I/O	I/O	I/O
21	GND	GND	GND
22	V_{CCA}	V_{CCA}	V_{CCA}
23	GND	GND	GND
24	I/O	I/O	I/O
25	I/O	I/O	I/O
26	I/O	I/O	I/O
27	I/O	I/O	I/O
28	I/O	I/O	I/O
29	I/O	I/O	I/O
30	I/O	I/O	I/O
31	I/O	I/O	I/O
32	V_{CCI}	V_{CCI}	V_{CCI}
33	V_{CCA}	V_{CCA}	V_{CCA}
34	I/O	I/O	I/O

176-Pin TQFP			
Pin Number	A54SX08 Function	A54SX16, A54SX16P Function	A54SX32 Function
35	I/O	I/O	I/O
36	I/O	I/O	I/O
37	I/O	I/O	I/O
38	I/O	I/O	I/O
39	I/O	I/O	I/O
40	NC	I/O	I/O
41	I/O	I/O	I/O
42	NC	I/O	I/O
43	I/O	I/O	I/O
44	GND	GND	GND
45	I/O	I/O	I/O
46	I/O	I/O	I/O
47	I/O	I/O	I/O
48	I/O	I/O	I/O
49	I/O	I/O	I/O
50	I/O	I/O	I/O
51	I/O	I/O	I/O
52	V_{CCI}	V_{CCI}	V_{CCI}
53	I/O	I/O	I/O
54	NC	I/O	I/O
55	I/O	I/O	I/O
56	I/O	I/O	I/O
57	NC	I/O	I/O
58	I/O	I/O	I/O
59	I/O	I/O	I/O
60	I/O	I/O	I/O
61	I/O	I/O	I/O
62	I/O	I/O	I/O
63	I/O	I/O	I/O
64	PRB, I/O	PRB, I/O	PRB, I/O
65	GND	GND	GND
66	V_{CCA}	V_{CCA}	V_{CCA}
67	V_{CCR}	V_{CCR}	V_{CCR}
68	I/O	I/O	I/O

176-Pin TQFP			
Pin Number	A54SX08 Function	A54SX16, A54SX16P Function	A54SX32 Function
69	HCLK	HCLK	HCLK
70	I/O	I/O	I/O
71	I/O	I/O	I/O
72	I/O	I/O	I/O
73	I/O	I/O	I/O
74	I/O	I/O	I/O
75	I/O	I/O	I/O
76	I/O	I/O	I/O
77	I/O	I/O	I/O
78	I/O	I/O	I/O
79	NC	I/O	I/O
80	I/O	I/O	I/O
81	NC	I/O	I/O
82	V_{CCI}	V_{CCI}	V_{CCI}
83	I/O	I/O	I/O
84	I/O	I/O	I/O
85	I/O	I/O	I/O
86	I/O	I/O	I/O
87	TDO, I/O	TDO, I/O	TDO, I/O
88	I/O	I/O	I/O
89	GND	GND	GND
90	NC	I/O	I/O
91	NC	I/O	I/O
92	I/O	I/O	I/O
93	I/O	I/O	I/O
94	I/O	I/O	I/O
95	I/O	I/O	I/O
96	I/O	I/O	I/O
97	I/O	I/O	I/O
98	V_{CCA}	V_{CCA}	V_{CCA}
99	V_{CCI}	V_{CCI}	V_{CCI}
100	I/O	I/O	I/O
101	I/O	I/O	I/O
102	I/O	I/O	I/O

176-Pin TQFP			
Pin Number	A54SX08 Function	A54SX16, A54SX16P Function	A54SX32 Function
103	I/O	I/O	I/O
104	I/O	I/O	I/O
105	I/O	I/O	I/O
106	I/O	I/O	I/O
107	I/O	I/O	I/O
108	GND	GND	GND
109	V_{CCA}	V_{CCA}	V_{CCA}
110	GND	GND	GND
111	I/O	I/O	I/O
112	I/O	I/O	I/O
113	I/O	I/O	I/O
114	I/O	I/O	I/O
115	I/O	I/O	I/O
116	I/O	I/O	I/O
117	I/O	I/O	I/O
118	NC	I/O	I/O
119	I/O	I/O	I/O
120	NC	I/O	I/O
121	NC	I/O	I/O
122	V_{CCA}	V_{CCA}	V_{CCA}
123	GND	GND	GND
124	V_{CCI}	V_{CCI}	V_{CCI}
125	I/O	I/O	I/O
126	I/O	I/O	I/O
127	I/O	I/O	I/O
128	I/O	I/O	I/O
129	I/O	I/O	I/O
130	I/O	I/O	I/O
131	NC	I/O	I/O
132	NC	I/O	I/O
133	GND	GND	GND
134	I/O	I/O	I/O
135	I/O	I/O	I/O
136	I/O	I/O	I/O

176-Pin TQFP			
Pin Number	**A54SX08 Function**	**A54SX16, A54SX16P Function**	**A54SX32 Function**
137	I/O	I/O	I/O
138	I/O	I/O	I/O
139	I/O	I/O	I/O
140	V_{CCI}	V_{CCI}	V_{CCI}
141	I/O	I/O	I/O
142	I/O	I/O	I/O
143	I/O	I/O	I/O
144	I/O	I/O	I/O
145	I/O	I/O	I/O
146	I/O	I/O	I/O
147	I/O	I/O	I/O
148	I/O	I/O	I/O
149	I/O	I/O	I/O
150	I/O	I/O	I/O
151	I/O	I/O	I/O
152	CLKA	CLKA	CLKA
153	CLKB	CLKB	CLKB
154	V_{CCR}	V_{CCR}	V_{CCR}
155	GND	GND	GND
156	V_{CCA}	V_{CCA}	V_{CCA}

176-Pin TQFP			
Pin Number	**A54SX08 Function**	**A54SX16, A54SX16P Function**	**A54SX32 Function**
157	PRA, I/O	PRA, I/O	PRA, I/O
158	I/O	I/O	I/O
159	I/O	I/O	I/O
160	I/O	I/O	I/O
161	I/O	I/O	I/O
162	I/O	I/O	I/O
163	I/O	I/O	I/O
164	I/O	I/O	I/O
165	I/O	I/O	I/O
166	I/O	I/O	I/O
167	I/O	I/O	I/O
168	NC	I/O	I/O
169	V_{CCI}	V_{CCI}	V_{CCI}
170	I/O	I/O	I/O
171	NC	I/O	I/O
172	NC	I/O	I/O
173	NC	I/O	I/O
174	I/O	I/O	I/O
175	I/O	I/O	I/O
176	TCK, I/O	TCK, I/O	TCK, I/O

100-Pin VQFP

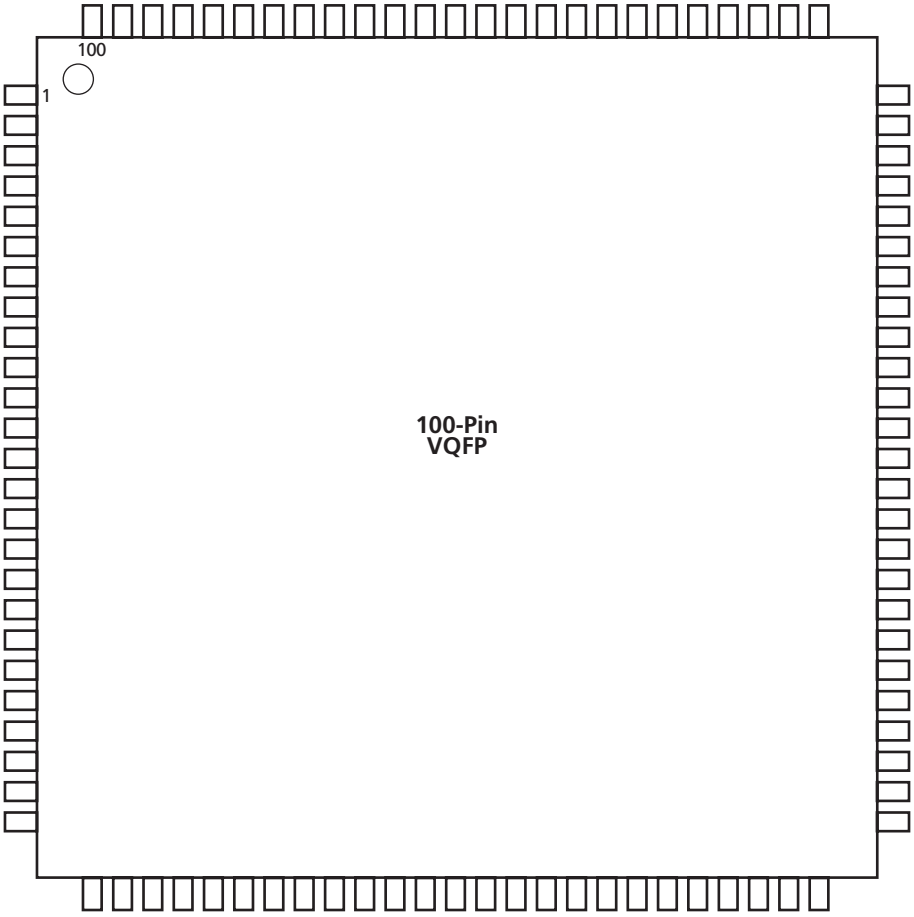

Figure 2-5 • **100-Pin VQFP (Top View)**

Note

For Package Manufacturing and Environmental information, visit the Package Resource center at http://www.actel.com/products/rescenter/package/index.html.

100-Pin VQFP		
Pin Number	**A54SX08 Function**	**A54SX16, A54SX16P Function**
1	GND	GND
2	TDI, I/O	TDI, I/O
3	I/O	I/O
4	I/O	I/O
5	I/O	I/O
6	I/O	I/O
7	TMS	TMS
8	V_{CCI}	V_{CCI}
9	GND	GND
10	I/O	I/O
11	I/O	I/O
12	I/O	I/O
13	I/O	I/O
14	I/O	I/O
15	I/O	I/O
16	I/O	I/O
17	I/O	I/O
18	I/O	I/O
19	I/O	I/O
20	V_{CCI}	V_{CCI}
21	I/O	I/O
22	I/O	I/O
23	I/O	I/O
24	I/O	I/O
25	I/O	I/O
26	I/O	I/O
27	I/O	I/O
28	I/O	I/O
29	I/O	I/O
30	I/O	I/O
31	I/O	I/O
32	I/O	I/O
33	I/O	I/O
34	PRB, I/O	PRB, I/O

100-Pin VQFP		
Pin Number	**A54SX08 Function**	**A54SX16, A54SX16P Function**
35	V_{CCA}	V_{CCA}
36	GND	GND
37	V_{CCR}	V_{CCR}
38	I/O	I/O
39	HCLK	HCLK
40	I/O	I/O
41	I/O	I/O
42	I/O	I/O
43	I/O	I/O
44	V_{CCI}	V_{CCI}
45	I/O	I/O
46	I/O	I/O
47	I/O	I/O
48	I/O	I/O
49	TDO, I/O	TDO, I/O
50	I/O	I/O
51	GND	GND
52	I/O	I/O
53	I/O	I/O
54	I/O	I/O
55	I/O	I/O
56	I/O	I/O
57	V_{CCA}	V_{CCA}
58	V_{CCI}	V_{CCI}
59	I/O	I/O
60	I/O	I/O
61	I/O	I/O
62	I/O	I/O
63	I/O	I/O
64	I/O	I/O
65	I/O	I/O
66	I/O	I/O
67	V_{CCA}	V_{CCA}
68	GND	GND

100-Pin VQFP		
Pin Number	**A54SX08 Function**	**A54SX16, A54SX16P Function**
69	GND	GND
70	I/O	I/O
71	I/O	I/O
72	I/O	I/O
73	I/O	I/O
74	I/O	I/O
75	I/O	I/O
76	I/O	I/O
77	I/O	I/O
78	I/O	I/O
79	I/O	I/O
80	I/O	I/O
81	I/O	I/O
82	V_{CCI}	V_{CCI}
83	I/O	I/O
84	I/O	I/O
85	I/O	I/O
86	I/O	I/O
87	CLKA	CLKA
88	CLKB	CLKB
89	V_{CCR}	V_{CCR}
90	V_{CCA}	V_{CCA}
91	GND	GND
92	PRA, I/O	PRA, I/O
93	I/O	I/O
94	I/O	I/O
95	I/O	I/O
96	I/O	I/O
97	I/O	I/O
98	I/O	I/O
99	I/O	I/O
100	TCK, I/O	TCK, I/O

313-Pin PBGA

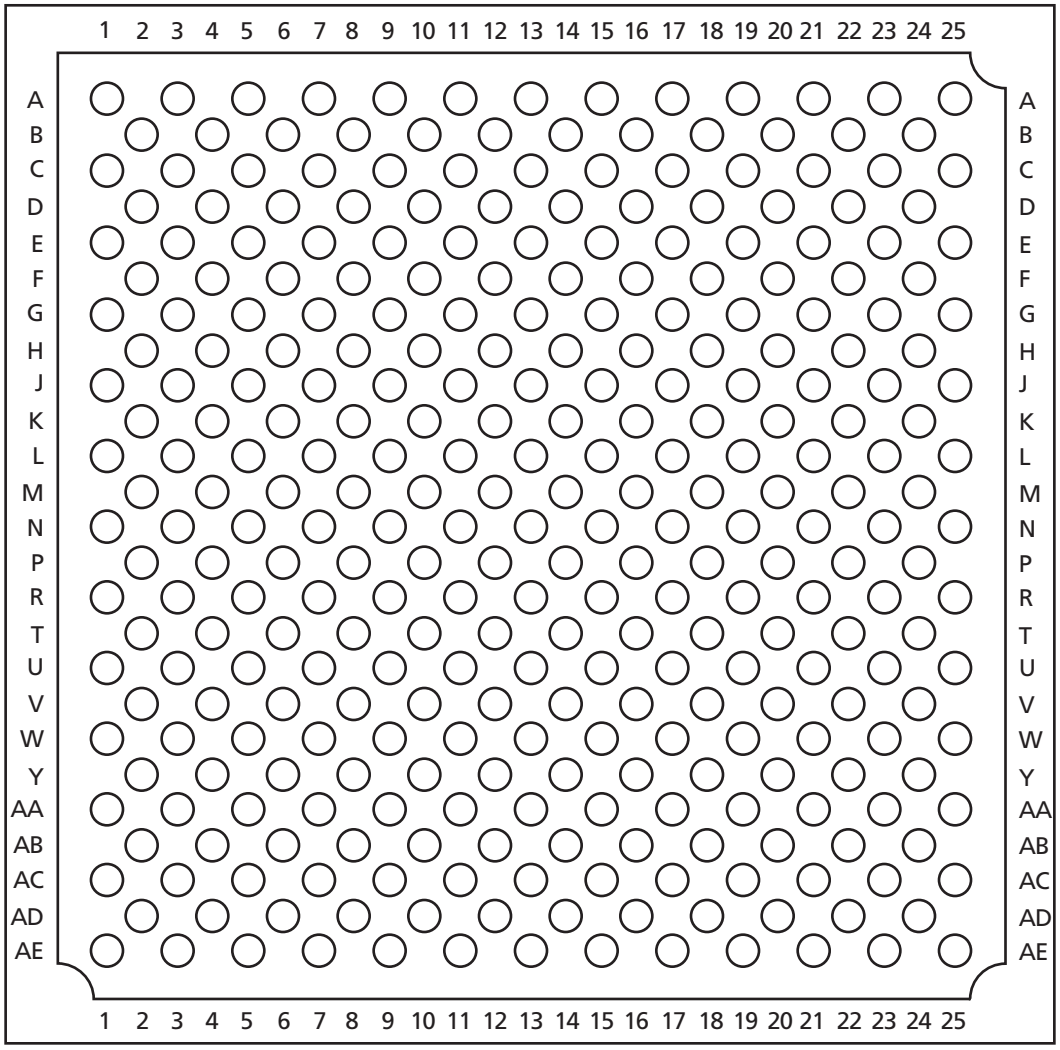

Figure 2-6 • **313-Pin PBGA (Top View)**

Note

For Package Manufacturing and Environmental information, visit the Package Resource center at http://www.actel.com/products/rescenter/package/index.html.

313-Pin PBGA	
Pin Number	A54SX32 Function
A1	GND
A3	NC
A5	I/O
A7	I/O
A9	I/O
A11	I/O
A13	V_{CCR}
A15	I/O
A17	I/O
A19	I/O
A21	I/O
A23	NC
A25	GND
AA1	I/O
AA3	I/O
AA5	NC
AA7	I/O
AA9	NC
AA11	I/O
AA13	I/O
AA15	I/O
AA17	I/O
AA19	I/O
AA21	I/O
AA23	NC
AA25	I/O
AB2	NC
AB4	NC
AB6	I/O
AB8	I/O
AB10	I/O
AB12	I/O
AB14	I/O
AB16	I/O
AB18	V_{CCI}
AB20	NC
AB22	I/O
AB24	I/O
AC1	I/O
AC3	I/O

313-Pin PBGA	
Pin Number	A54SX32 Function
AC5	I/O
AC7	I/O
AC9	I/O
AC11	I/O
AC13	V_{CCR}
AC15	I/O
AC17	I/O
AC19	I/O
AC21	I/O
AC23	I/O
AC25	NC
AD2	GND
AD4	I/O
AD6	V_{CCI}
AD8	I/O
AD10	I/O
AD12	PRB, I/O
AD14	I/O
AD16	I/O
AD18	I/O
AD20	I/O
AD22	NC
AD24	I/O
AE1	NC
AE3	I/O
AE5	I/O
AE7	I/O
AE9	I/O
AE11	I/O
AE13	V_{CCA}
AE15	I/O
AE17	I/O
AE19	I/O
AE21	I/O
AE23	TDO, I/O
AE25	GND
B2	TCK, I/O
B4	I/O
B6	I/O
B8	I/O

313-Pin PBGA	
Pin Number	A54SX32 Function
B10	I/O
B12	I/O
B14	I/O
B16	I/O
B18	I/O
B20	I/O
B22	I/O
B24	I/O
C1	TDI, I/O
C3	I/O
C5	NC
C7	I/O
C9	I/O
C11	I/O
C13	V_{CCI}
C15	I/O
C17	I/O
C19	V_{CCI}
C21	I/O
C23	I/O
C25	NC
D2	I/O
D4	NC
D6	I/O
D8	I/O
D10	I/O
D12	I/O
D14	I/O
D16	I/O
D18	I/O
D20	I/O
D22	I/O
D24	NC
E1	I/O
E3	NC
E5	I/O
E7	I/O
E9	I/O
E11	I/O
E13	V_{CCA}

313-Pin PBGA	
Pin Number	A54SX32 Function
E15	I/O
E17	I/O
E19	I/O
E21	I/O
E23	I/O
E25	I/O
F2	I/O
F4	I/O
F6	NC
F8	I/O
F10	NC
F12	I/O
F14	I/O
F16	NC
F18	I/O
F20	I/O
F22	I/O
F24	I/O
G1	I/O
G3	TMS
G5	I/O
G7	I/O
G9	V_{CCI}
G11	I/O
G13	CLKB
G15	I/O
G17	I/O
G19	I/O
G21	I/O
G23	I/O
G25	I/O
H2	I/O
H4	I/O
H6	I/O
H8	I/O
H10	I/O
H12	PRA, I/O
H14	I/O
H16	I/O
H18	NC

313-Pin PBGA	
Pin Number	A54SX32 Function
H20	I/O
H22	V_{CCI}
H24	I/O
J1	I/O
J3	I/O
J5	I/O
J7	NC
J9	I/O
J11	I/O
J13	CLKA
J15	I/O
J17	I/O
J19	I/O
J21	GND
J23	I/O
J25	I/O
K2	I/O
K4	I/O
K6	I/O
K8	V_{CCI}
K10	I/O
K12	I/O
K14	I/O
K16	I/O
K18	I/O
K20	V_{CCA}
K22	I/O
K24	I/O
L1	I/O
L3	I/O
L5	I/O
L7	I/O
L9	I/O
L11	I/O
L13	GND
L15	I/O
L17	I/O
L19	I/O
L21	I/O
L23	I/O

313-Pin PBGA	
Pin Number	A54SX32 Function
L25	I/O
M2	I/O
M4	I/O
M6	I/O
M8	I/O
M10	I/O
M12	GND
M14	GND
M16	V_{CCI}
M18	I/O
M20	I/O
M22	I/O
M24	I/O
N1	I/O
N3	V_{CCA}
N5	V_{CCR}
N7	I/O
N9	V_{CCI}
N11	GND
N13	GND
N15	GND
N17	I/O
N19	I/O
N21	I/O
N23	V_{CCR}
N25	V_{CCA}
P2	I/O
P4	I/O
P6	I/O
P8	I/O
P10	I/O
P12	GND
P14	GND
P16	I/O
P18	I/O
P20	NC
P22	I/O
P24	I/O
R1	I/O
R3	I/O

313-Pin PBGA	
Pin Number	A54SX32 Function
R5	I/O
R7	I/O
R9	I/O
R11	I/O
R13	GND
R15	I/O
R17	I/O
R19	I/O
R21	I/O
R23	I/O
R25	I/O
T2	I/O
T4	I/O
T6	I/O
T8	I/O
T10	I/O
T12	I/O
T14	HCLK
T16	I/O
T18	I/O
T20	I/O
T22	I/O
T24	I/O
U1	I/O
U3	I/O
U5	V_{CCI}
U7	I/O
U9	I/O
U11	I/O
U13	I/O
U15	I/O
U17	I/O
U19	I/O
U21	I/O
U23	I/O
U25	I/O
V2	V_{CCA}
V4	I/O
V6	I/O
V8	I/O

313-Pin PBGA	
Pin Number	A54SX32 Function
V10	I/O
V12	I/O
V14	I/O
V16	NC
V18	I/O
V20	I/O
V22	V_{CCA}
V24	V_{CCI}
W1	I/O
W3	I/O
W5	I/O
W7	NC
W9	I/O
W11	I/O
W13	V_{CCI}
W15	I/O
W17	I/O
W19	I/O
W21	I/O
W23	I/O
W25	I/O
Y2	I/O
Y4	I/O
Y6	I/O
Y8	I/O
Y10	I/O
Y12	I/O
Y14	I/O
Y16	I/O
Y18	I/O
Y20	NC
Y22	I/O
Y24	NC

329-Pin PBGA

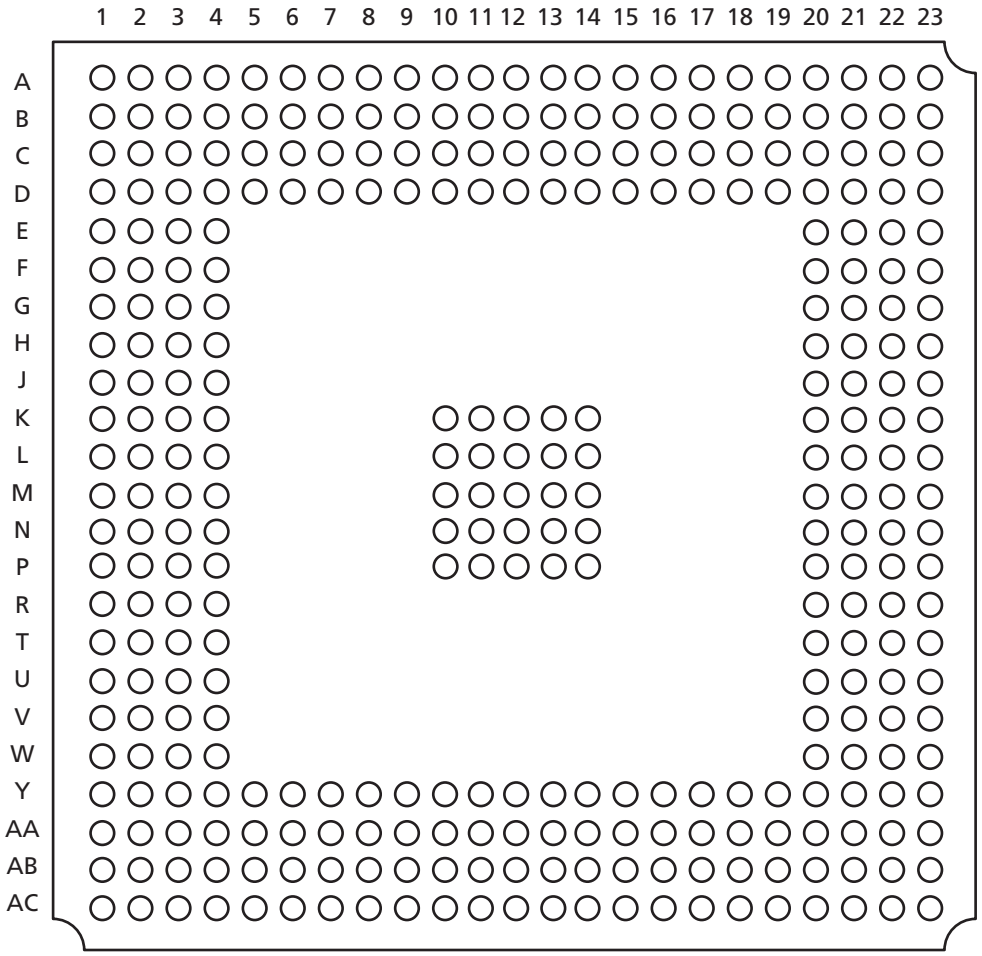

Figure 2-7 • **329-Pin PBGA (Top View)**

Note

For Package Manufacturing and Environmental information, visit the Package Resource center at http://www.actel.com/products/rescenter/package/index.html.

329-Pin PBGA	
Pin Number	**A54SX32 Function**
A1	GND
A2	GND
A3	V_{CCI}
A4	NC
A5	I/O
A6	I/O
A7	V_{CCI}
A8	NC
A9	I/O
A10	I/O
A11	I/O
A12	I/O
A13	CLKB
A14	I/O
A15	I/O
A16	I/O
A17	I/O
A18	I/O
A19	I/O
A20	I/O
A21	NC
A22	V_{CCI}
A23	GND
AA1	V_{CCI}
AA2	I/O
AA3	GND
AA4	I/O
AA5	I/O
AA6	I/O
AA7	I/O
AA8	I/O
AA9	I/O
AA10	I/O
AA11	I/O
AA12	I/O

329-Pin PBGA	
Pin Number	**A54SX32 Function**
AA13	I/O
AA14	I/O
AA15	I/O
AA16	I/O
AA17	I/O
AA18	I/O
AA19	I/O
AA20	TDO, I/O
AA21	V_{CCI}
AA22	I/O
AA23	V_{CCI}
AB1	I/O
AB2	GND
AB3	I/O
AB4	I/O
AB5	I/O
AB6	I/O
AB7	I/O
AB8	I/O
AB9	I/O
AB10	I/O
AB11	PRB, I/O
AB12	I/O
AB13	HCLK
AB14	I/O
AB15	I/O
AB16	I/O
AB17	I/O
AB18	I/O
AB19	I/O
AB20	I/O
AB21	I/O
AB22	GND
AB23	I/O
AC1	GND

329-Pin PBGA	
Pin Number	**A54SX32 Function**
AC2	V_{CCI}
AC3	NC
AC4	I/O
AC5	I/O
AC6	I/O
AC7	I/O
AC8	I/O
AC9	V_{CCI}
AC10	I/O
AC11	I/O
AC12	I/O
AC13	I/O
AC14	I/O
AC15	NC
AC16	I/O
AC17	I/O
AC18	I/O
AC19	I/O
AC20	I/O
AC21	NC
AC22	V_{CCI}
AC23	GND
B1	V_{CCI}
B2	GND
B3	I/O
B4	I/O
B5	I/O
B6	I/O
B7	I/O
B8	I/O
B9	I/O
B10	I/O
B11	I/O
B12	PRA, I/O
B13	CLKA

329-Pin PBGA	
Pin Number	**A54SX32 Function**
B14	I/O
B15	I/O
B16	I/O
B17	I/O
B18	I/O
B19	I/O
B20	I/O
B21	I/O
B22	GND
B23	V_{CCI}
C1	NC
C2	TDI, I/O
C3	GND
C4	I/O
C5	I/O
C6	I/O
C7	I/O
C8	I/O
C9	I/O
C10	I/O
C11	I/O
C12	I/O
C13	I/O
C14	I/O
C15	I/O
C16	I/O
C17	I/O
C18	I/O
C19	I/O
C20	I/O
C21	V_{CCI}
C22	GND
C23	NC
D1	I/O
D2	I/O

329-Pin PBGA		329-Pin PBGA		329-Pin PBGA		329-Pin PBGA	
Pin Number	A54SX32 Function	Pin Number	A54SX32 Function	Pin Number	A54SX32 Function	Pin Number	A54SX32 Function
D3	I/O	F22	I/O	K20	I/O	N11	GND
D4	TCK, I/O	F23	I/O	K21	I/O	N12	GND
D5	I/O	G1	I/O	K22	I/O	N13	GND
D6	I/O	G2	I/O	K23	I/O	N14	GND
D7	I/O	G3	I/O	L1	I/O	N20	NC
D8	I/O	G4	I/O	L2	I/O	N21	I/O
D9	I/O	G20	I/O	L3	I/O	N22	I/O
D10	I/O	G21	I/O	L4	V_{CCR}	N23	I/O
D11	V_{CCA}	G22	I/O	L10	GND	P1	I/O
D12	V_{CCR}	G23	GND	L11	GND	P2	I/O
D13	I/O	H1	I/O	L12	GND	P3	I/O
D14	I/O	H2	I/O	L13	GND	P4	I/O
D15	I/O	H3	I/O	L14	GND	P10	GND
D16	I/O	H4	I/O	L20	V_{CCR}	P11	GND
D17	I/O	H20	V_{CCA}	L21	I/O	P12	GND
D18	I/O	H21	I/O	L22	I/O	P13	GND
D19	I/O	H22	I/O	L23	NC	P14	GND
D20	I/O	H23	I/O	M1	I/O	P20	I/O
D21	I/O	J1	NC	M2	I/O	P21	I/O
D22	I/O	J2	I/O	M3	I/O	P22	I/O
D23	I/O	J3	I/O	M4	V_{CCA}	P23	I/O
E1	V_{CCI}	J4	I/O	M10	GND	R1	I/O
E2	I/O	J20	I/O	M11	GND	R2	I/O
E3	I/O	J21	I/O	M12	GND	R3	I/O
E4	I/O	J22	I/O	M13	GND	R4	I/O
E20	I/O	J23	I/O	M14	GND	R20	I/O
E21	I/O	K1	I/O	M20	V_{CCA}	R21	I/O
E22	I/O	K2	I/O	M21	I/O	R22	I/O
E23	I/O	K3	I/O	M22	I/O	R23	I/O
F1	I/O	K4	I/O	M23	V_{CCI}	T1	I/O
F2	TMS	K10	GND	N1	I/O	T2	I/O
F3	I/O	K11	GND	N2	I/O	T3	I/O
F4	I/O	K12	GND	N3	I/O	T4	I/O
F20	I/O	K13	GND	N4	I/O	T20	I/O
F21	I/O	K14	GND	N10	GND	T21	I/O

329-Pin PBGA	
Pin Number	**A54SX32 Function**
T22	I/O
T23	I/O
U1	I/O
U2	I/O
U3	V_{CCA}
U4	I/O
U20	I/O
U21	V_{CCA}
U22	I/O
U23	I/O
V1	V_{CCI}
V2	I/O
V3	I/O

329-Pin PBGA	
Pin Number	**A54SX32 Function**
V4	I/O
V20	I/O
V21	I/O
V22	I/O
V23	I/O
W1	I/O
W2	I/O
W3	I/O
W4	I/O
W20	I/O
W21	I/O
W22	I/O

329-Pin PBGA	
Pin Number	**A54SX32 Function**
W23	NC
Y1	NC
Y2	I/O
Y3	I/O
Y4	GND
Y5	I/O
Y6	I/O
Y7	I/O
Y8	I/O
Y9	I/O
Y10	I/O
Y11	I/O

329-Pin PBGA	
Pin Number	**A54SX32 Function**
Y12	V_{CCA}
Y13	V_{CCR}
Y14	I/O
Y15	I/O
Y16	I/O
Y17	I/O
Y18	I/O
Y19	I/O
Y20	GND
Y21	I/O
Y22	I/O
Y23	I/O

144-Pin FBGA

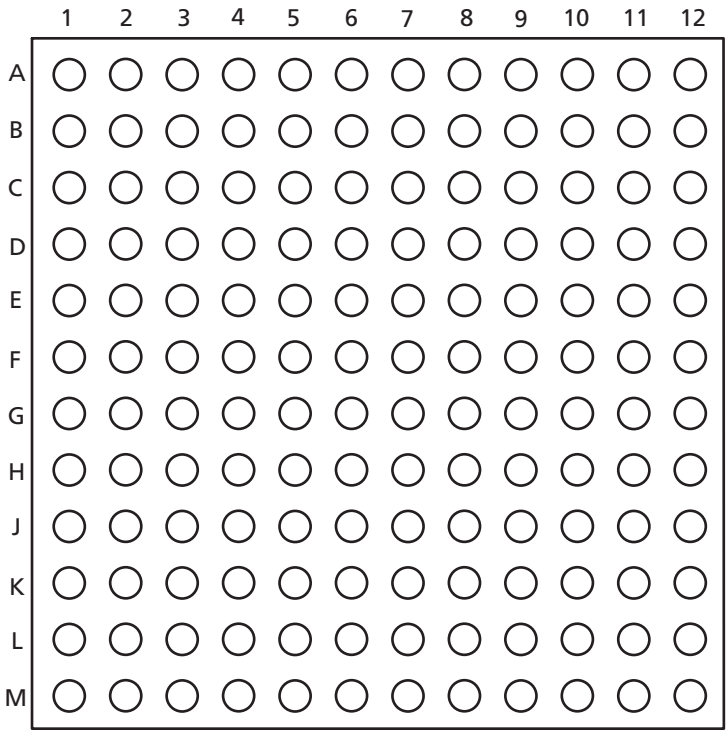

Figure 2-8 • **144-Pin FBGA (Top View)**

Note

For Package Manufacturing and Environmental information, visit the Package Resource center at http://www.actel.com/products/rescenter/package/index.html.

144-Pin FBGA	
Pin Number	A54SX08 Function
A1	I/O
A2	I/O
A3	I/O
A4	I/O
A5	V_{CCA}
A6	GND
A7	CLKA
A8	I/O
A9	I/O
A10	I/O
A11	I/O
A12	I/O
B1	I/O
B2	GND
B3	I/O
B4	I/O
B5	I/O
B6	I/O
B7	CLKB
B8	I/O
B9	I/O
B10	I/O
B11	GND
B12	I/O
C1	I/O
C2	I/O
C3	TCK, I/O
C4	I/O
C5	I/O
C6	PRA, I/O
C7	I/O
C8	I/O
C9	I/O
C10	I/O
C11	I/O
C12	I/O

144-Pin FBGA	
Pin Number	A54SX08 Function
D1	I/O
D2	V_{CCI}
D3	TDI, I/O
D4	I/O
D5	I/O
D6	I/O
D7	I/O
D8	I/O
D9	I/O
D10	I/O
D11	I/O
D12	I/O
E1	I/O
E2	I/O
E3	I/O
E4	I/O
E5	TMS
E6	V_{CCI}
E7	V_{CCI}
E8	V_{CCI}
E9	V_{CCA}
E10	I/O
E11	GND
E12	I/O
F1	I/O
F2	I/O
F3	V_{CCR}
F4	I/O
F5	GND
F6	GND
F7	GND
F8	V_{CCI}
F9	I/O
F10	GND
F11	I/O
F12	I/O

144-Pin FBGA	
Pin Number	A54SX08 Function
G1	I/O
G2	GND
G3	I/O
G4	I/O
G5	GND
G6	GND
G7	GND
G8	V_{CCI}
G9	I/O
G10	I/O
G11	I/O
G12	I/O
H1	I/O
H2	I/O
H3	I/O
H4	I/O
H5	V_{CCA}
H6	V_{CCA}
H7	V_{CCI}
H8	V_{CCI}
H9	V_{CCA}
H10	I/O
H11	I/O
H12	V_{CCR}
J1	I/O
J2	I/O
J3	I/O
J4	I/O
J5	I/O
J6	PRB, I/O
J7	I/O
J8	I/O
J9	I/O
J10	I/O
J11	I/O
J12	V_{CCA}

144-Pin FBGA	
Pin Number	A54SX08 Function
K1	I/O
K2	I/O
K3	I/O
K4	I/O
K5	I/O
K6	I/O
K7	GND
K8	I/O
K9	I/O
K10	GND
K11	I/O
K12	I/O
L1	GND
L2	I/O
L3	I/O
L4	I/O
L5	I/O
L6	I/O
L7	HCLK
L8	I/O
L9	I/O
L10	I/O
L11	I/O
L12	I/O
M1	I/O
M2	I/O
M3	I/O
M4	I/O
M5	I/O
M6	I/O
M7	V_{CCA}
M8	I/O
M9	I/O
M10	I/O
M11	TDO, I/O
M12	I/O

Datasheet Information

List of Changes

The following table lists critical changes that were made in the current version of the document.

Previous Version	Changes in Current Version (v3.2)	Page
v3.1 (June 2003)	The "Ordering Information" was updated to include RoHS information.	1-ii
	The Product Plan was removed since all products have been released.	N/A
	Information concerning the TRST pin in the "Probe Circuit Control Pins" section was removed.	1-6
	The "Dedicated Test Mode" section is new.	1-6
	The "Programming" section is new.	1-7
	A note was added to the "Power-Up Sequencing" table.	1-15
	A note was added to the "Power-Down Sequencing" table. The 3.3 V comments were updated for the following devices: A54SX08, A54SX16, A54SX32.	1-15
	U11 and U13 were added to the "313-Pin PBGA" table.	2-17
v3.0.1	Storage temperature in Table 1-3 was updated.	1-7
	Table 1-1 was updated.	1-5

Datasheet Categories

In order to provide the latest information to designers, some datasheets are published before data has been fully characterized. Datasheets are designated as "Product Brief," "Advanced," "Production," and "Datasheet Supplement." The definitions of these categories are as follows:

Product Brief

The product brief is a summarized version of a datasheet (advanced or production) containing general product information. This brief gives an overview of specific device and family information.

Advanced

This datasheet version contains initial estimated information based on simulation, other products, devices, or speed grades. This information can be used as estimates, but not for production.

Unmarked (production)

This datasheet version contains information that is considered to be final.

Datasheet Supplement

The datasheet supplement gives specific device information for a derivative family that differs from the general family datasheet. The supplement is to be used in conjunction with the datasheet to obtain more detailed information and for specifications that do not differ between the two families.

International Traffic in Arms Regulations (ITAR) and Export Administration Regulations (EAR)

The products described in this datasheet are subject to the International Traffic in Arms Regulations (ITAR) or the Export Administration Regulations (EAR). They may require an approved export license prior to their export. An export can include a release or disclosure to a foreign national inside or outside the United States.

Actel and the Actel logo are registered trademarks of Actel Corporation.
All other trademarks are the property of their owners.

www.actel.com

Actel Corporation

2061 Stierlin Court
Mountain View, CA
94043-4655 USA

Phone 650.318.4200
Fax 650.318.4600

Actel Europe Ltd.

Dunlop House, Riverside Way
Camberley, Surrey GU15 3YL
United Kingdom

Phone +44 (0) 1276 401 450
Fax +44 (0) 1276 401 490

Actel Japan
www.jp.actel.com

EXOS Ebisu Bldg. 4F
1-24-14 Ebisu Shibuya-ku
Tokyo 150 Japan

Phone +81.03.3445.7671
Fax +81.03.3445.7668

Actel Hong Kong
www.actel.com.cn

Suite 2114, Two Pacific Place
88 Queensway, Admiralty
Hong Kong

Phone +852 2185 6460
Fax +852 2185 6488

5172137-5/6.06

Mouser Electronics

Authorized Distributor

Click to View Pricing, Inventory, Delivery & Lifecycle Information:

Microchip:

SMAX-624CG-ACTEL SMSX-84CQ-ACTEL A54SX16P-PQG208I A54SX32-1PQ208 A54SX32-1TQ176 A54SX32-2PQ208I A54SX32-2TQ144I A54SX32-2BG329I A54SX16-PQ208 A54SX16-2PQG208 A54SX16-2TQG176 A54SX16P-TQ144I A54SX16P-2TQG144I A54SX16P-1PQ208M A54SX32-1TQG144I A54SX16P-2TQ144 A54SX32-1TQG144 A54SX32-2TQ176I A54SX08-1FG144I A54SX08-FGG144I A54SX16-2PQG208I A54SX16P-TQG176I A54SX16P-2TQ176 A54SX16P-1TQG144I A54SX32-TQG176I A54SX08-2PLG84 A54SX08-2PLG84I A54SX08-2PQG208I A54SX16-2VQ100I A54SX16-2PQ208I A54SX32-1BGG329 A54SX32-PQ208M A54SX32-TQG176 A54SX32-2PQG208 A54SX32-1PQ208M A54SX32-TQG144M A54SX16P-1VQ100I A54SX32-2BGG329I A54SX32-PQG208M A54SX16P-1VQG100I A54SX32-1TQG144M A54SX32-1BG329 A54SX32-TQ176I A54SX32-PQG208I A54SX08-2TQG176I A54SX08-2FGG144I A54SX16-1VQG100 A54SX16-1PQG208 A54SX08-1PL84 A54SX08-1TQG176 A54SX08-1PQG208I A54SX16-PQG208I A54SX16P-TQ176I A54SX16P-1TQG144M A54SX08-1TQ176 A54SX08-1TQG144I A54SX08-1TQG176I A54SX16-2VQG100 A54SX16-1TQ176I A54SX16P-1VQ100 A54SX32-TQG144 A54SX32-1PQG208I A54SX32-1BGG329I A54SX32-2TQG176I A54SX08-TQ176I A54SX08-PL84 A54SX32-2TQ176 A54SX08-TQG176 A54SX08-1VQG100 A54SX08-VQ100I A54SX16P-1PQG208I A54SX32-1TQ144 A54SX16-1TQ176 A54SX16-TQG176I A54SX16P-2PQ208 A54SX16P-TQG176 A54SX16P-2PQG208 A54SX16P-TQG144I A54SX32-1TQ144I A54SX32-1BG329I A54SX16-1VQ100I A54SX16-1VQG100I A54SX16-1PQG208I A54SX16P-1VQG100 A54SX16P-VQ100I A54SX16P-PQG208M A54SX32-2BG329 A54SX32-TQ144I A54SX32-1PQ208I A54SX32-2BGG329 A54SX32-2PQG208I A54SX08-TQG144 A54SX08-1VQ100 A54SX08-1FGG144 A54SX08-2TQG144 A54SX08-1PQ208I A54SX16-VQG100I A54SX16-2TQG176I A54SX32-1PQG208 A54SX32-1TQG176

Общество с ограниченной ответственностью «МосЧип» ИНН 7719860671 / КПП 771901001
Адрес: 105318, г.Москва, ул.Щербаковская д.3, офис 1107

Данный компонент на территории Российской Федерации

Вы можете приобрести в компании MosChip.

Для оперативного оформления запроса Вам необходимо перейти по данной ссылке:

http://moschip.ru/get-element

Вы можете разместить у нас заказ для любого Вашего проекта, будь то серийное производство или разработка единичного прибора.

В нашем ассортименте представлены ведущие мировые производители активных и пассивных электронных компонентов.

Нашей специализацией является поставка электронной компонентной базы двойного назначения, продукции таких производителей как XILINX, Intel (ex.ALTERA), Vicor, Microchip, Texas Instruments, Analog Devices, Mini-Circuits, Amphenol, Glenair.

Сотрудничество с глобальными дистрибьюторами электронных компонентов, предоставляет возможность заказывать и получать с международных складов практически любой перечень компонентов в оптимальные для Вас сроки.

На всех этапах разработки и производства наши партнеры могут получить квалифицированную поддержку опытных инженеров.

Система менеджмента качества компании отвечает требованиям в соответствии с ГОСТ Р ИСО 9001, ГОСТ РВ 0015-002 и ЭС РД 009

Офис по работе с юридическими лицами:

105318, г.Москва, ул.Щербаковская д.3, офис 1107, 1118, ДЦ «Щербаковский»

Телефон: +7 495 668-12-70 (многоканальный)

Факс: +7 495 668-12-70 (доб.304)

E-mail: info@moschip.ru

Skype отдела продаж:
moschip.ru
moschip.ru_4
moschip.ru_6
moschip.ru_9