MCP3425

16-Bit Analog-to-Digital Converter with I^{2}C Interface and On-Board Reference

Features

- 16-bit ΔΣ ADC in a SOT-23-6 package
- Differential Input Operation
- Self Calibration of Internal Offset and Gain per each conversion
- On-Board Voltage Reference:
  - Accuracy: 2.048V ± 0.05%
- On-Board Programmable Gain Amplifier (PGA):
  - Gains of 1, 2, 4 or 8
- On-Board Oscillator
- INL: 10 ppm of FSR (FSR = 4.096V/PGA)
- Programmable Data Rate Options:
  - 15 SPS (16 bits)
  - 60 SPS (14 bits)
  - 240 SPS (12 bits)
- One-Shot or Continuous Conversion Options
- Low Current Consumption:
  - 145 µA typical (V_{DD}= 3V, Continuous Conversion)
- One-Shot Conversion (1 SPS) with V_{DD} = 3V:
  - 9.7 µA typical with 16 bit mode
  - 2.4 µA typical with 14 bit mode
  - 0.6 µA typical with 12 bit mode
- Supports I^{2}C Serial Interface:
  - Standard, Fast and High-Speed Modes
- Single Supply Operation: 2.7V to 5.5V
- Extended Temperature Range: -40°C to 125°C

Typical Applications

- Portable Instrumentation
- Weigh Scales and Fuel Gauges
- Temperature Sensing with RTD, Thermistor, and Thermocouple
- Bridge Sensing for Pressure, Strain, and Force.

Package Types

SOT-23-6 **MCP3425**

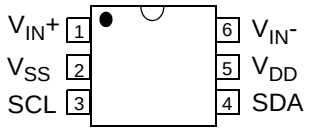

Description

The MCP3425 is a single channel low-noise, high accuracy ΔΣ A/D converter with differential inputs and up to 16 bits of resolution in a small SOT-23-6 package. The on-board precision 2.048V reference voltage enables an input range of ±2.048V differentially (Δ voltage = 4.096V). The device uses a two-wire I^{2}C compatible serial interface and operates from a single 2.7V to 5.5V power supply.

The MCP3425 device performs conversion at rates of 15, 60, or 240 samples per second (SPS) depending on the user controllable configuration bit settings using the two-wire I^{2}C serial interface. This device has an on-board programmable gain amplifier (PGA). The user can select the PGA gain of x1, x2, x4, or x8 before the analog-to-digital conversion takes place. This allows the MCP3425 device to convert a smaller input signal with high resolution. The device has two conversion modes: (a) Continuous mode and (b) One-Shot mode. In One-Shot mode, the device enters a low current standby mode automatically after one conversion. This reduces current consumption greatly during idle periods.

The MCP3425 device can be used for various high accuracy analog-to-digital data conversion applications where design simplicity, low power, and small footprint are major considerations.

Block Diagram

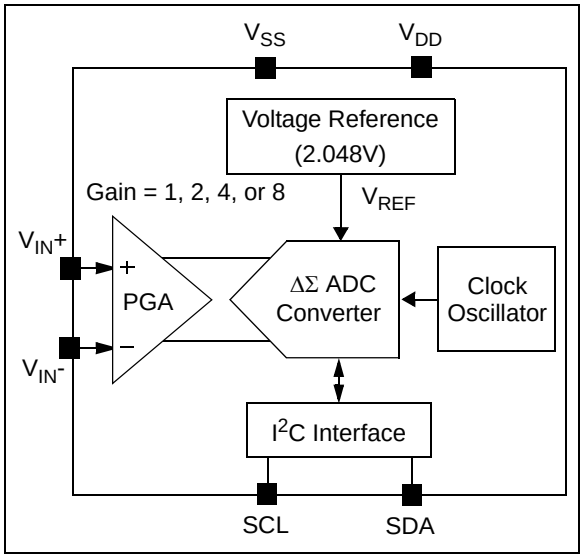

© 2009 Microchip Technology Inc.

NOTES:

© 2009 Microchip Technology Inc.

1.0 ELECTRICAL CHARACTERISTICS

1.1 Absolute Maximum Ratings†

V_{DD}.....7.0V
All inputs and outputs w.r.t V_{SS} ..... –0.3V to V_{DD}+0.3V
Differential Input Voltage ..... $|V_{DD} - V_{SS}|$
Output Short Circuit Current .....Continuous
Current at Input Pins .....±2 mA
Current at Output and Supply Pins .....±10 mA
Storage Temperature .....-65°C to +150°C
Ambient Temp. with power applied .....-55°C to +125°C
ESD protection on all pins ..... ≥ 6 kV HBM, ≥ 400V MM
Maximum Junction Temperature (T_J). .....+150°C

†Notice: Stresses above those listed under “Maximum Ratings” may cause permanent damage to the device. This is a stress rating only and functional operation of the device at those or any other conditions above those indicated in the operational listings of this specification is not implied. Exposure to maximum rating conditions for extended periods may affect device reliability.

ELECTRICAL CHARACTERISTICS

Electrical Specifications: Unless otherwise specified, all parameters apply for T_A = -40°C to +85°C, V_{DD} = +5.0V, V_{SS} = 0V, V_{IN}+ = V_{IN}- = V_{REF}/2. All ppm units use 2*V_{REF} as full-scale range.

Parameters	Sym	Min	Typ	Max	Units	Conditions
Analog Inputs						
Differential Input Range		—	±2.048/PGA	—	V	$V_{IN} = V_{IN}+ - V_{IN}-$
Common-Mode Voltage Range (absolute) **(Note 1)**		V_{SS}-0.3	—	V_{DD}+0.3	V	
Differential Input Impedance **(Note 2)**	Z_{IND} (f)	—	2.25/PGA	—	MΩ	During normal mode operation
Common Mode input Impedance	Z_{INC} (f)	—	25	—	MΩ	PGA = 1, 2, 4, 8
System Performance						
Resolution and No Missing Codes **(Note 8)**		12	—	—	Bits	DR = 240 SPS
		14	—	—	Bits	DR = 60 SPS
		16	—	—	Bits	DR = 15 SPS
Data Rate **(Note 3)**	DR	176	240	328	SPS	S1,S0 = ‘00’, (12 bits mode)
		44	60	82	SPS	S1,S0 = ‘01’, (14 bits mode)
		11	15	20.5	SPS	S1,S0 = ‘10’, (16 bits mode)
Output Noise		—	2.5	—	μV_{RMS}	T_A = +25°C, DR = 15 SPS, PGA = 1, V_{IN} = 0
Integral Nonlinearity (Note 4)	INL	—	10	—	ppm of FSR	DR = 15 SPS **(Note 6)**
Internal Reference Voltage	V_{REF}	—	2.048	—	V	
Gain Error **(Note 5)**		—	0.1	—	%	PGA = 1, DR = 15 SPS
PGA Gain Error Match **(Note 5)**		—	0.1	—	%	Between any 2 PGA gains
Gain Error Drift **(Note 5)**		—	15	—	ppm/°C	PGA=1, DR = 15 SPS

Note 1: Any input voltage below or greater than this voltage causes leakage current through the ESD diodes at the input pins. This parameter is ensured by characterization and not 100% tested.
2: This input impedance is due to 3.2 pF internal input sampling capacitor.
3: The total conversion speed includes auto-calibration of offset and gain.
4: INL is the difference between the endpoints line and the measured code at the center of the quantization band.
5: Includes all errors from on-board PGA and V_{REF}.
6: Full Scale Range (FSR) = 2 x 2.048/PGA = 4.096/PGA.
7: This parameter is ensured by characterization and not 100% tested.
8: This parameter is ensured by design and not 100% tested.

ELECTRICAL CHARACTERISTICS (CONTINUED)

Electrical Specifications: Unless otherwise specified, all parameters apply for T_A = -40°C to +85°C, V_{DD} = +5.0V, V_{SS} = 0V, V_{IN}+ = V_{IN}- = V_{REF}/2. All ppm units use 2*V_{REF} as full-scale range.

Parameters	Sym	Min	Typ	Max	Units	Conditions
Offset Error	V_{OS}	—	30	—	µV	Tested at PGA = 1 V_{DD} = 5.0V and DR = 15 SPS
Offset Drift vs. Temperature		—	300	—	nV/°C	V_{DD} = 5.0V
Common-Mode Rejection		—	100	—	dB	at DC and PGA =1,
		—	105	—	dB	at DC and PGA =8, T_A = +25°C
Gain vs. V_{DD}		—	5	—	ppm/V	T_A = +25°C, V_{DD} = 2.7V to 5.5V, PGA = 1
Power Supply Rejection at DC		—	95	—	dB	T_A = +25°C, V_{DD} = 2.7V to 5.5V, PGA = 1
Power Requirements						
Voltage Range	V_{DD}	2.7	—	5.5	V	
Supply Current during Conversion	I_{DDA}	—	155	190	µA	V_{DD} = 5.0V
		—	145	—	µA	V_{DD} = 3.0V
Supply Current during Standby Mode	I_{DDS}	—	0.1	0.5	µA	
I^2C Digital Inputs and Digital Outputs						
High level input voltage	V_{IH}	0.7 V_{DD}	—	V_{DD}	V	
Low level input voltage	V_{IL}	—	—	0.3V_{DD}	V	
Low level output voltage	V_{OL}	—	—	0.4	V	I_{OL} = 3 mA, V_{DD} = +5.0V
Hysteresis of Schmitt Trigger for inputs **(Note 7)**	V_{HYST}	0.05V_{DD}	—	—	V	f_{SCL} = 100 kHz
Supply Current when I^2C bus line is active	I_{DDB}	—	—	10	µA	
Input Leakage Current	I_{ILH}	—	—	1	µA	V_{IH} = 5.5V
	I_{ILL}	-1	—	—	µA	V_{IL} = GND
Pin Capacitance and I^2C Bus Capacitance						
Pin capacitance	C_{PIN}	—	—	10	pF	
I^2C Bus Capacitance	C_b	—	—	400	pF	

Note 1: Any input voltage below or greater than this voltage causes leakage current through the ESD diodes at the input pins. This parameter is ensured by characterization and not 100% tested.
2: This input impedance is due to 3.2 pF internal input sampling capacitor.
3: The total conversion speed includes auto-calibration of offset and gain.
4: INL is the difference between the endpoints line and the measured code at the center of the quantization band.
5: Includes all errors from on-board PGA and V_{REF}.
6: Full Scale Range (FSR) = 2 x 2.048/PGA = 4.096/PGA.
7: This parameter is ensured by characterization and not 100% tested.
8: This parameter is ensured by design and not 100% tested.

TEMPERATURE SPECIFICATIONS

Electrical Characteristics: Unless otherwise indicated, T_A = -40°C to +85°C, V_{DD} = +5.0V, V_{SS} = 0V.

Parameters	Sym	Min	Typ	Max	Units	Conditions
Temperature Ranges						
Specified Temperature Range	TA	-40	—	+85	°C	
Operating Temperature Range	T_A	-40	—	+125	°C	
Storage Temperature Range	T_A	-65	—	+150	°C	
Thermal Package Resistances						
Thermal Resistance, 6L SOT-23	θ_{JA}	—	190.5	—	°C/W	

© 2009 Microchip Technology Inc.

2.0 TYPICAL PERFORMANCE CURVES

Note: The graphs and tables provided following this note are a statistical summary based on a limited number of samples and are provided for informational purposes only. The performance characteristics listed herein are not tested or guaranteed. In some graphs or tables, the data presented may be outside the specified operating range (e.g., outside specified power supply range) and therefore outside the warranted range.

Note: Unless otherwise indicated, T_A = -40°C to +85°C, V_{DD} = +5.0V, V_{SS} = 0V, V_{IN}+ = V_{IN}- = V_{REF}/2.

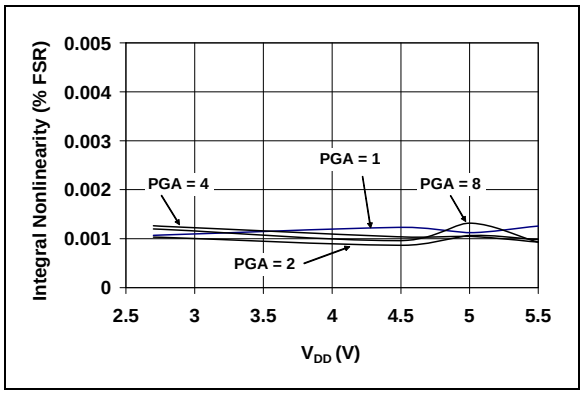

FIGURE 2-1: *INL vs. Supply Voltage (V_{DD}).*

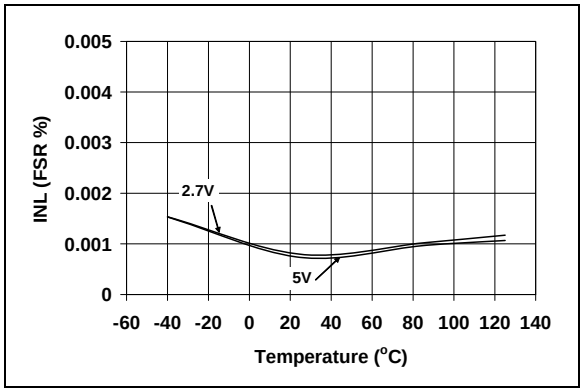

FIGURE 2-2: *INL vs. Temperature.*

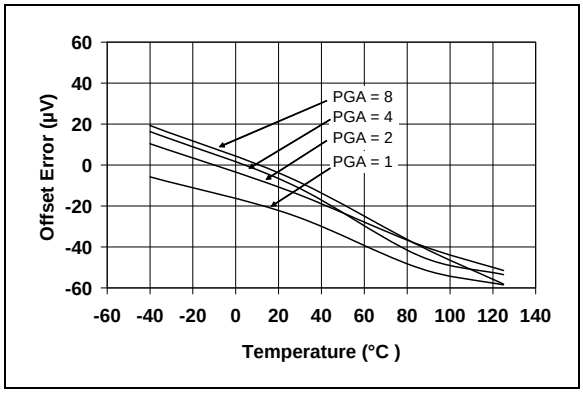

FIGURE 2-3: *Offset Error vs. Temperature.*

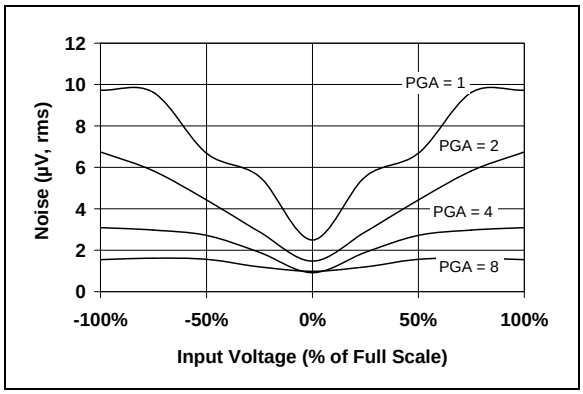

FIGURE 2-4: *Output Noise vs. Input Voltage.*

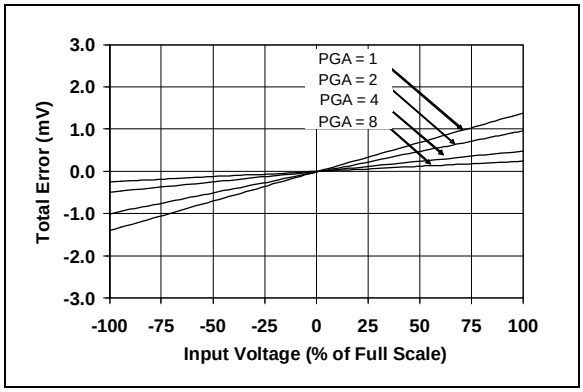

FIGURE 2-5: *Total Error vs. Input Voltage.*

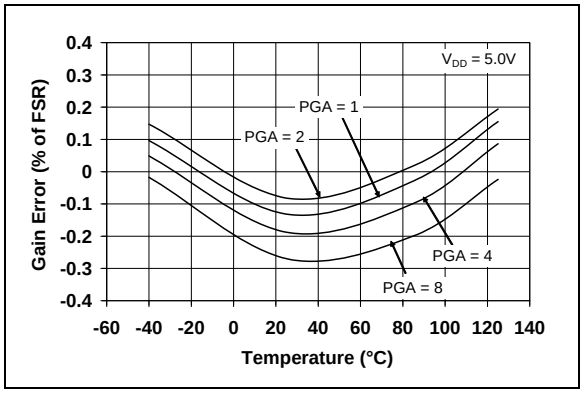

FIGURE 2-6: *Gain Error vs. Temperature.*

Note: Unless otherwise indicated, T_A = -40°C to +85°C, V_{DD} = +5.0V, V_{SS} = 0V, V_{IN}+ = V_{IN}- = V_{REF}/2.

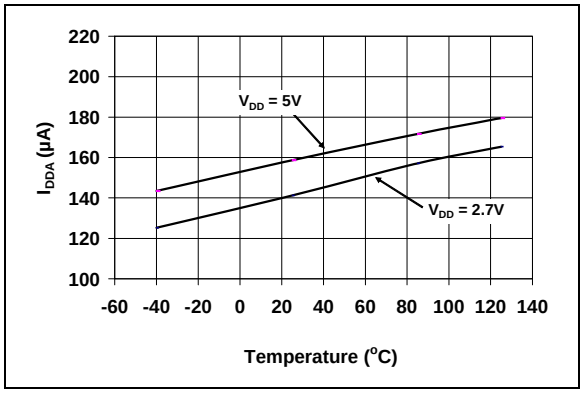

FIGURE 2-7: *I_{DDA} vs. Temperature.*

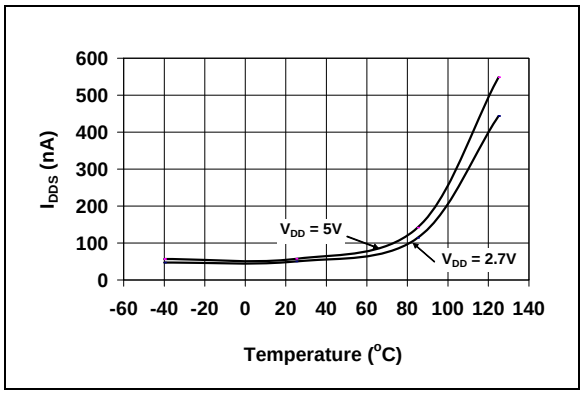

FIGURE 2-8: *I_{DDS} vs. Temperature.*

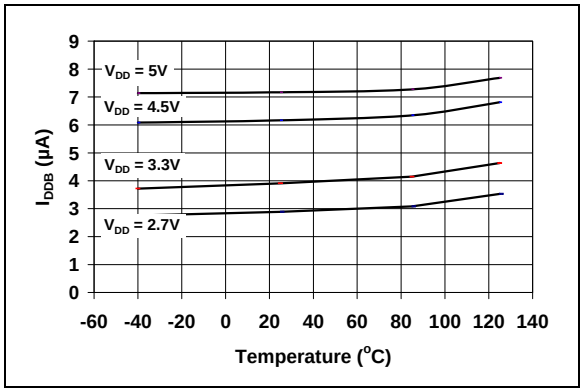

FIGURE 2-9: *I_{DDB} vs. Temperature.*

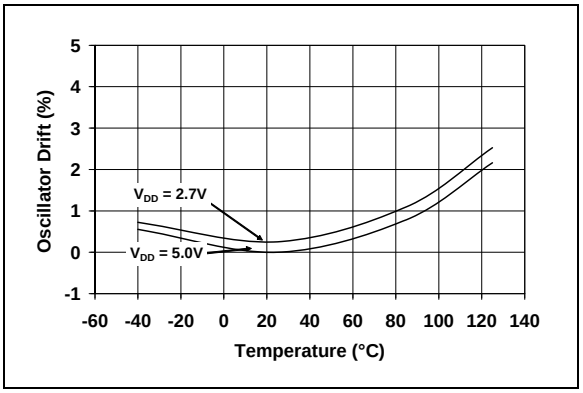

FIGURE 2-10: *OSC Drift vs. Temperature.*

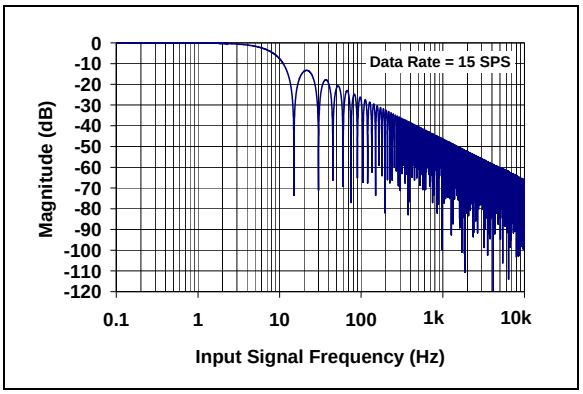

FIGURE 2-11: *Frequency Response.*

© 2009 Microchip Technology Inc.

3.0 PIN DESCRIPTIONS

The descriptions of the pins are listed in Table 3-1.

TABLE 3-1: PIN FUNCTION TABLE

MCP3425 SOT-23-6	Symbol	Definition
1	V_{IN}+	Positive Differential Analog Input Pin
2	V_{SS}	Ground Pin
3	SCL	Serial Clock Input Pin of the I^2C Interface
4	SDA	Bidirectional Serial Data Pin of the I^2C Interface
5	V_{DD}	Positive Supply Voltage Pin
6	V_{IN}-	Negative Differential Analog Input Pin

3.1 Analog Inputs (V_{IN}+, V_{IN}-)

V_{IN}+ and V_{IN}- are differential signal input pins. The MCP3425 device accepts a fully differential analog input signal which is connected on the V_{IN}+ and V_{IN}- input pins. The differential voltage that is converted is defined by $V_{IN} = (V_{IN}+ - V_{IN}-)$ where V_{IN}+ is the voltage applied at the V_{IN}+ pin and V_{IN}- is the voltage applied at the V_{IN}- pin. The input signal level is amplified by the programmable gain amplifier (PGA) before the conversion. The differential input voltage should not exceed an absolute of (V_{REF}/PGA) for accurate measurement, where V_{REF} is the internal reference voltage (2.048V) and PGA is the PGA gain setting. The converter output code will saturate if the input range exceeds (V_{REF}/PGA).

The absolute voltage range on each of the differential input pins is from V_{SS}-0.3V to V_{DD}+0.3V. Any voltage above or below this range will cause leakage currents through the Electrostatic Discharge (ESD) diodes at the input pins. This ESD current can cause unexpected performance of the device. The common mode of the analog inputs should be chosen such that both the differential analog input range and the absolute voltage range on each pin are within the specified operating range defined in **Section 1.0 "Electrical Characteristics"** and **Section 4.0 "Description of Device Operation"**.

3.2 Supply Voltage (V_{DD}, V_{SS})

V_{DD} is the power supply pin for the device. This pin requires an appropriate bypass capacitor of about 0.1 µF (ceramic) to ground. An additional 10 µF capacitor (tantalum) in parallel is also recommended to further attenuate high frequency noise present in some application boards. The supply voltage (V_{DD}) must be maintained in the 2.7V to 5.5V range for specified operation.

V_{SS} is the ground pin and the current return path of the device. The user must connect the V_{SS} pin to a ground plane through a low impedance connection. If an analog ground path is available in the application PCB (printed circuit board), it is highly recommended that the V_{SS} pin be tied to the analog ground path or isolated within an analog ground plane of the circuit board.

3.3 Serial Clock Pin (SCL)

SCL is the serial clock pin of the I^2C interface. The MCP3425 acts only as a slave and the SCL pin accepts only external serial clocks. The input data from the Master device is shifted into the SDA pin on the rising edges of the SCL clock and output from the MCP3425 occurs at the falling edges of the SCL clock. The SCL pin is an open-drain N-channel driver. Therefore, it needs a pull-up resistor from the V_{DD} line to the SCL pin. Refer to **Section 5.3 "I^2C Serial Communications"** for more details of I^2C Serial Interface communication.

3.4 Serial Data Pin (SDA)

SDA is the serial data pin of the I^2C interface. The SDA pin is used for input and output data. In read mode, the conversion result is read from the SDA pin (output). In write mode, the device configuration bits are written (input) though the SDA pin. The SDA pin is an open-drain N-channel driver. Therefore, it needs a pull-up resistor from the V_{DD} line to the SDA pin. Except for start and stop conditions, the data on the SDA pin must be stable during the high period of the clock. The high or low state of the SDA pin can only change when the clock signal on the SCL pin is low. Refer to **Section 5.3 "I^2C Serial Communications"** for more details of I^2C Serial Interface communication.

NOTES:

© 2009 Microchip Technology Inc.

4.0 DESCRIPTION OF DEVICE OPERATION

4.1 General Overview

The MCP3425 is a low-power, 16-Bit Delta-Sigma A/D converter with an I^2C serial interface. The device contains an on-board voltage reference (2.048V), programmable gain amplifier (PGA), and internal oscillator. The user can select 12, 14, or 16 bit conversion by setting the configuration register bits. The device can be operated in Continuous Conversion or One-Shot Conversion mode. In the Continuous Conversion mode, the device converts the inputs continuously. While in the One-Shot Conversion mode, the device converts the input one time and stays in the low-power standby mode until it receives another command for a new conversion. During the standby mode, the device consumes less than 0.1 µA typical. When the device powers up (POR is set), it automatically resets the configuration bits to default settings.

Device default settings are:

- Conversion bit resolution: 12 bits (240 sps)
- PGA gain setting: x1
- Continuous conversion

Once the device is powered-up, the user can reprogram the configuration bits using I^2C serial interface any time. The configuration bits are stored in volatile memory.

User selectable options are:

- Conversion bit resolution: 12, 14, or 16 bits
- PGA Gain selection: x1, x2, x4, or x8
- Continuous or one-shot conversion

In the Continuous Conversion mode, the device converts the inputs continuously. While in the One-Shot Conversion mode, the device converts the input one time and stays in the low-power standby mode until it receives another command for a new conversion. During the standby mode, the device consumes less than 1 µA maximum.

4.2 Power-On-Reset (POR)

The device contains an internal Power-On-Reset (POR) circuit that monitors power supply voltage (V_{DD}) during operation. This circuit ensures correct device start-up at system power-up and power-down events. The POR has built-in hysteresis and a timer to give a high degree of immunity to potential ripples and noises on the power supply. A 0.1 µF decoupling capacitor should be mounted as close as possible to the V_{DD} pin for additional transient immunity.

The threshold voltage is set at 2.2V with a tolerance of approximately ±5%. If the supply voltage falls below this threshold, the device will be held in a reset condition. The typical hysteresis value is approximately 200 mV.

The POR circuit is shut-down during the low-power standby mode. Once a power-up event has occurred, the device requires additional delay time (approximately 300 µs) before a conversion can take place. During this time, all internal analog circuitries are settled before the first conversion occurs. Figure 4-1 illustrates the conditions for power-up and power-down events under typical start-up conditions.

When the device powers up, it automatically resets and sets the configuration bits to default settings. The default configuration bit conditions are a PGA gain of 1 V/V and a conversion speed of 240 SPS in Continuous Conversion mode. When the device receives an I^2C General Call Reset command, it performs an internal reset similar to a Power-On-Reset event.

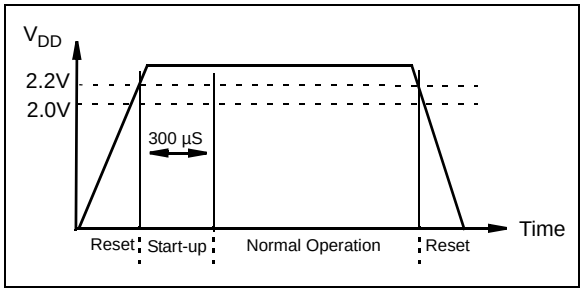

FIGURE 4-1: *POR Operation.*

4.3 Internal Voltage Reference

The device contains an on-board 2.048V voltage reference. This reference voltage is for internal use only and not directly measurable. The specifications of the reference voltage are part of the device's gain and drift specifications. Therefore, there is no separate specification for the on-board reference.

4.4 Analog Input Channel

The differential analog input channel has a switched capacitor structure. The internal sampling capacitor (3.2 pF for PGA = 1) is charged and discharged to process a conversion. The charging and discharging of the input sampling capacitor creates dynamic input currents at each input pin. The current is a function of the differential input voltages, and inversely proportional to the internal sampling capacitance, sampling frequency, and PGA setting.

© 2009 Microchip Technology Inc.

4.5 Input Voltage Range

The differential (V_{IN}) and common mode voltage (V_{INCOM}) at the input pins without considering PGA setting are defined by:

$$V_{IN} = V_{IN}+ - V_{IN}-$$

$$V_{INCOM} = \frac{V_{IN}+ + V_{IN}-}{2}$$

The input signal levels are amplified by the internal programmable gain amplifier (PGA) at the front end of the ΔΣ modulator.

The user needs to consider two conditions for the input voltage range: (a) Differential input voltage range and (b) Absolute maximum input voltage range.

4.5.1 DIFFERENTIAL INPUT VOLTAGE RANGE

The device performs conversions using its internal reference voltage (V_{REF} = 2.048V). Therefore, the absolute value of the differential input voltage (V_{IN}), with PGA setting is included, needs to be less than the internal reference voltage. The device will output saturated output codes (all 0s or all 1s except sign bit) if the absolute value of the input voltage (V_{IN}), with PGA setting is included, is greater than the internal reference voltage (V_{REF} = 2.048V). The input full-scale voltage range is given by:

EQUATION 4-1:

$$-V_{REF} \leq (V_{IN} \bullet PGA) \leq (V_{REF} - 1LSB)$$

Where:

V_{IN} = $V_{IN}+ - V_{IN}-$

V_{REF} = 2.048V

If the input voltage level is greater than the above limit, the user can use a voltage divider and bring down the input level within the full-scale range. See Figure 6-7 for more details of the input voltage divider circuit.

4.5.2 ABSOLUTE MAXIMUM INPUT VOLTAGE RANGE

The input voltage at each input pin must be less than the following absolute maximum input voltage limits:

- Input voltage < V_{DD}+0.3V
- Input voltage > V_{SS}-0.3V

Any input voltage outside this range can turn on the input ESD protection diodes, and result in input leakage current, causing conversion errors, or permanently damage the device.

Care must be taken in setting the input voltage ranges so that the input voltage does not exceed the absolute maximum input voltage range.

4.6 Input Impedance

The device uses a switched-capacitor input stage using a 3.2 pF sampling capacitor. This capacitor is switched (charged and discharged) at a rate of the sampling frequency that is generated by on-board clock. The differential input impedance varies with the PGA settings. The typical differential input impedance during a normal mode operation is given by:

$$Z_{IN}(f) = 2.25\ M\Omega/PGA$$

Since the sampling capacitor is only switching to the input pins during a conversion process, the above input impedance is only valid during conversion periods. In a low power standby mode, the above impedance is not presented at the input pins. Therefore, only a leakage current due to ESD diode is presented at the input pins.

The conversion accuracy can be affected by the input signal source impedance when any external circuit is connected to the input pins. The source impedance adds to the internal impedance and directly affects the time required to charge the internal sampling capacitor. Therefore, a large input source impedance connected to the input pins can degrade the system performance, such as offset, gain, and Integral Non-Linearity (INL) errors. Ideally, the input source impedance should be zero. This can be achievable by using an operational amplifier with a closed-loop output impedance of tens of ohms.

4.7 Aliasing and Anti-aliasing Filter

Aliasing occurs when the input signal contains time-varying signal components with frequency greater than half the sample rate. In the aliasing conditions, the device can output unexpected output codes. For applications that are operating in electrical noise environments, the time-varying signal noise or high frequency interference components can be easily added to the input signals and cause aliasing. Although the device has an internal first order *sinc* filter, the filter response (Figure 2-11) may not give enough attenuation to all aliasing signal components. To avoid the aliasing, an external anti-aliasing filter, which can be accomplished with a simple RC low-pass filter, is typically used at the input pins. The low-pass filter cuts off the high frequency noise components and provides a band-limited input signal to the input pins.

4.8 Self-Calibration

The device performs a self-calibration of offset and gain for each conversion. This provides reliable conversion results from conversion-to-conversion over variations in temperature as well as power supply fluctuations.

© 2009 Microchip Technology Inc.

4.9 Digital Output Codes and Conversion to Real Values

4.9.1 DIGITAL OUTPUT CODE FROM DEVICE

The digital output code is proportional to the input voltage and PGA settings. The output data format is a binary two's complement. With this code scheme, the MSB can be considered a sign indicator. When the MSB is a logic '0', the input is positive. When the MSB is a logic '1', the input is negative. The following is an example of the output code:

a. for a negative full scale input voltage: `100...000`
   Example: $(V_{IN}+ - V_{IN}-) \bullet PGA = -2.048V$
b. for a zero differential input voltage: `000...000`
   Example: $(V_{IN}+ - V_{IN}-) = 0$
c. for a positive full-scale input voltage: `011...111`
   Example: $(V_{IN}+ - V_{IN}-) \bullet PGA = 2.048V$

The MSB (sign bit) is always transmitted first through the I^2C serial data line. The resolution for each conversion is 16, 14, or 12 bits depending on the conversion rate selection bit settings by the user.

The output codes will not roll-over even if the input voltage exceeds the maximum input range. In this case, the code will be locked at `0111...11` for all voltages greater than (V_{REF} - 1 LSB)/PGA and `1000...00` for voltages less than $-V_{REF}$/PGA. Table 4-2 shows an example of output codes of various input levels for 16 bit conversion mode. Table 4-3 shows an example of minimum and maximum output codes for each conversion rate option.

The number of output code is given by:

EQUATION 4-2:

Number of Output Code

$$= (Maximum\ Code + 1) \times PGA \times \frac{(V_{IN}+ - V_{IN}-)}{2.048V}$$

Where:

See Table 4-3 for Maximum Code

The LSB of the data conversion is given by:

EQUATION 4-3:

$$LSB = \frac{2 \times V_{REF}}{2^N} = \frac{2 \times 2.048V}{2^N}$$

Where:

N = User programmable bit resolution: 12,14, or 16

Table 4-1 shows the LSB size of each conversion rate setting. The measured unknown input voltage is obtained by multiplying the output codes with LSB. See the following section for the input voltage calculation using the output codes.

TABLE 4-1: RESOLUTION SETTINGS VS. LSB

Resolution Setting	LSB
12 bits	1 mV
14 bits	250 µV
16 bits	62.5 µV

TABLE 4-2: EXAMPLE OF OUTPUT CODE FOR 16 BITS

Input Voltage: $[V_{IN}+ - V_{IN}-] \bullet PGA$	Digital Output Code
$\geq V_{REF}$	`0111111111111111`
V_{REF} - 1 LSB	`0111111111111111`
2 LSB	`0000000000000010`
1 LSB	`0000000000000001`
0	`0000000000000000`
-1 LSB	`1111111111111111`
-2 LSB	`1111111111111110`
$-V_{REF}$	`1000000000000000`
$< -V_{REF}$	`1000000000000000`

Note 1: MSB is a sign indicator:
0: Positive input ($V_{IN}+ > V_{IN}-$)
1: Negative input ($V_{IN}+ > V_{IN}-$)

2: Output data format is binary two's complement.

TABLE 4-3: MINIMUM AND MAXIMUM CODES

Number of Bits	Data Rate	Minimum Code	Maximum Code
12	240 SPS	-2048	2047
14	60 SPS	-8192	8191
16	15 SPS	-32768	32767

Note: Maximum n-bit code = $2^{n-1} - 1$
Minimum n-bit code = $-1 \times 2^{n-1}$

4.9.2 CONVERTING THE DEVICE OUTPUT CODE TO INPUT SIGNAL VOLTAGE

When the user gets the digital output codes from the device as described in **Section 4.9.1 "Digital output code from device"**, the next step is converting the digital output codes to a measured input voltage. Equation 4-4 shows an example of converting the output codes to its corresponding input voltage.

If the sign indicator bit (MSB) is `'0'`, the input voltage is obtained by multiplying the output code with the LSB and divided by the PGA setting.

If the sign indicator bit (MSB) is `'1'`, the output code needs to be converted to two's complement before multiplied by LSB and divided by the PGA setting. Table 4-4 shows an example of converting the device output codes to input voltage.

EQUATION 4-4: CONVERTING OUTPUT CODES TO INPUT VOLTAGE

If MSB = 0 (Positive Output Code):

$$\text{Input Voltage} = (\text{Output Code}) \bullet \frac{LSB}{PGA}$$

If MSB = 1 (Negative Output Code):

$$\text{Input Voltage} = (2\text{'s complement of Output Code}) \bullet \frac{LSB}{PGA}$$

Where:

LSB = See Table 4-1

2's complement = 1's complement + 1

TABLE 4-4: EXAMPLE OF CONVERTING OUTPUT CODE TO VOLTAGE (WITH 16 BIT SETTING)

Input Voltage [V_{IN}+ - V_{IN}-] • PGA]	Digital Output Code	MSB (sign bit)	Example of Converting Output Codes to Input Voltage
≥ V_{REF}	0111111111111111	0	$(2^{14}+2^{13}+2^{12}+2^{11}+2^{10}+2^{9}+2^{8}+2^{7}+2^{6}+2^{5}+2^{4}+2^{3}+2^{2}+2^{1}+2^{0})$x LSB(62.5 µV)/PGA = 2.048 (V) for PGA = 1
V_{REF} - 1 LSB	0111111111111111	0	$(2^{14}+2^{13}+2^{12}+2^{11}+2^{10}+2^{9}+2^{8}+2^{7}+2^{6}+2^{5}+2^{4}+2^{3}+2^{2}+2^{1}+2^{0})$x LSB(62.5 µV)/PGA = 2.048 (V) for PGA = 1
2 LSB	0000000000000010	0	$(0+0+0+0+0+0+0+0+0+0+0+0+0+0+2^{1}+0)$x LSB(62.5 µV)/PGA = 125 (µV) for PGA = 1
1 LSB	0000000000000001	0	$(0+0+0+0+0+0+0+0+0+0+0+0+0+0+0+2^{0})$x LSB(62.5 µV)/PGA = 62.5 (µV)for PGA = 1
0	0000000000000000	0	(0+0+0+0+0+0+0+0+0+0+0+0+0+0+0+0)x LSB(62.5 µV)/PGA = 0 (V) for PGA = 1
-1 LSB	1111111111111111	1	$-(0+0+0+0+0+0+0+0+0+0+0+0+0+0+0+2^{0})$x LSB(62.5 µV)/PGA = - 62.5 (µV)for PGA = 1
-2 LSB	1111111111111110	1	$-(0+0+0+0+0+0+0+0+0+0+0+0+0+0+2^{1}+0)$x LSB(62.5 µV)/PGA = - 125 (µV)for PGA = 1
- V_{REF}	1000000000000000	1	$-(2^{15}+0+0+0+0+0+0+0+0+0+0+0+0+0+0+0)$ x LSB(62.5 µV)/PGA = - 2.048 (V) for PGA = 1
≤ -V_{REF}	1000000000000000	1	$-(2^{15}+0+0+0+0+0+0+0+0+0+0+0+0+0+0+0)$ x LSB(62.5 µV)/PGA = - 2.048 (V) for PGA = 1

© 2009 Microchip Technology Inc.

5.0 USING THE MCP3425 DEVICE

5.1 Operating Modes

The user operates the device by setting up the device configuration register using a write command (see Figure 5-2) and reads the conversion data using a read command (see Figure 5-3). The device operates in two modes: (a) Continuous Conversion Mode or (b) One-Shot Conversion Mode (single conversion). This mode selection is made by setting the $\overline{O}$/C bit in the Configuration Register. Refer to **Section 5.2 "Configuration Register"** for more information.

5.1.1 CONTINUOUS CONVERSION MODE ($\overline{O}$/C BIT = 1)

The device performs a Continuous Conversion if the $\overline{O}$/C bit is set to logic "high". Once the conversion is completed, $\overline{RDY}$ bit is toggled to '0' and the result is placed at the output data register. The device immediately begins another conversion and overwrites the output data register with the most recent result. The device clears the data ready flag ($\overline{RDY}$ bit = 0) when the conversion is completed. The device sets the ready flag bit ($\overline{RDY}$ bit = 1), if the latest conversion result has been read by the Master.

- **When writing configuration register:**
  - Setting $\overline{RDY}$ bit in continuous mode does not affect anything
- **When reading conversion data:**
  - $\overline{RDY}$ bit = 0 means the latest conversion result is ready
  - $\overline{RDY}$ bit = 1 means the conversion result is not updated since the last reading. A new conversion is under processing and the $\overline{RDY}$ bit will be cleared when the new conversion result is ready

5.1.2 ONE-SHOT CONVERSION MODE ($\overline{O}$/C BIT = 0)

Once the One-Shot Conversion (single conversion) Mode is selected, the device performs only one conversion, updates the output data register, clears the data ready flag ($\overline{RDY}$ = 0), and then enters a low power standby mode. A new One-Shot Conversion is started again when the device receives a new write command with $\overline{RDY}$ = 1.

- **When writing configuration register:**
  - The $\overline{RDY}$ bit needs to be set to begin a new conversion in one-shot mode
- **When reading conversion data:**
  - RDY bit = 0 means the latest conversion result is ready
  - RDY bit = 1 means the conversion result is not updated since the last reading. A new conversion is under processing and the RDY bit will be cleared when the new conversion is done

This One-Shot Conversion Mode is recommended for low power operating applications. During the low current standby mode, the device consumes less than 1 µA typical. For example, if the device converts only one time per second with 16 bit resolution, the total current draw is only about one fourth of the draws in continuous mode. In this example, the device consumes approximately 9.7 µA (= ~145 µA/15 SPS), if the device performs only one conversion per second (1 SPS) in 16-bit conversion mode with 3V power supply.

5.2 Configuration Register

The MCP3425 has an 8-bit wide configuration register to select for: PGA gain, conversion rate, and conversion mode. This register allows the user to change the operating condition of the device and check the status of the device operation. The user can rewrite the configuration byte any time during the device operation. Register 5-1 shows the configuration register bits.

REGISTER 5-1: CONFIGURATION REGISTER

R/W-1	R/W-0	R/W-0	R/W-1	R/W-0	R/W-0	R/W-0	R/W-0
$\overline{\text{RDY}}$	C1	C0	$\overline{\text{O}}$/C	S1	S0	G1	G0
1 *	0 *	0 *	1 *	0 *	0 *	0 *	0 *
bit 7							bit 0

* Default Configuration after Power-On Reset

Legend:			
R = Readable bit	W = Writable bit	U = Unimplemented bit, read as ‘0’	
-n = Value at POR	‘1’ = Bit is set	‘0’ = Bit is cleared	x = Bit is unknown

bit 7 **$\overline{\text{RDY}}$:** Ready Bit

This bit is the data ready flag. In read mode, this bit indicates if the output register has been updated with a new conversion. In One-Shot Conversion mode, writing this bit to “1” initiates a new conversion.

Reading RDY bit with the read command:

`1` = Output register has not been updated.
`0` = Output register has been updated with the latest conversion data.

Writing $\overline{\text{RDY}}$ bit with the write command:

Continuous Conversion mode: No effect

One-Shot Conversion mode:
`1` = Initiate a new conversion.
`0` = No effect.

bit 6-5 **C1-C0:** Channel Selection Bits

These are the Channel Selection bits, but not used in the MCP3425 device.

bit 4 **$\overline{\text{O}}$/C:** Conversion Mode Bit

`1` = Continuous Conversion Mode. Once this bit is selected, the device performs data conversions continuously.
`0` = One-Shot Conversion Mode. The device performs a single conversion and enters a low power standby mode until it receives another write/read command.

bit 3-2 **S1-S0:** Sample Rate Selection Bit

00 = 240 SPS (12 bits),
01 = 60 SPS (14 bits),
10 = 15 SPS (16 bits)

bit 1-0 **G1-G0:** PGA Gain Selector Bits

00 = 1 V/V,
01 = 2 V/V,
10 = 4 V/V,
11 = 8 V/V

© 2009 Microchip Technology Inc.

If the configuration byte is read repeatedly by clocking continuously after reading the data bytes (i.e., after the 4th byte in the 16-bit conversion mode), the state of the $\overline{RDY}$ bit indicates whether the device is ready with new conversion result. When the Master finds the $\overline{RDY}$ bit is cleared, it can send a not-acknowledge (NAK) bit and a stop bit to exit the current read operation and send a new read command for the latest conversion data. Once the conversion data has been read, the ready bit toggles to `'1'` until the next new conversion data is ready. The conversion data in the output register is overwritten every time a new conversion is completed.

Figure 5-3 shows an example of reading the conversion data. The user can rewrite the configuration byte any time for a new setting.

Table 5-1 and Table 5-2 show the examples of the configuration bit operation.

TABLE 5-1: WRITE CONFIGURATION BITS

R/$\overline{W}$	$\overline{O}$/C	$\overline{RDY}$	Operation
0	0	0	No effect if all other bits remain the same - operation continues with the previous settings
0	0	1	Initiate One-Shot Conversion
0	1	0	Initiate Continuous Conversion
0	1	1	Initiate Continuous Conversion

TABLE 5-2: READ CONFIGURATION BITS

R/$\overline{W}$	$\overline{O}$/C	$\overline{RDY}$	Operation
1	0	0	New conversion result in One-Shot conversion mode has just been read. The $\overline{RDY}$ bit remains low until set by a new write command.
1	0	1	One-Shot Conversion is in progress. The conversion result is not updated yet. The $\overline{RDY}$ bit stays high until the current conversion is completed.
1	1	0	New conversion result in Continuous Conversion mode has just been read. The $\overline{RDY}$ bit changes to high after reading the conversion data.
1	1	1	The conversion result in Continuous Conversion mode was already read. The next new conversion data is not ready. The $\overline{RDY}$ bit stays high until a new conversion is completed.

5.3 I^{2}C Serial Communications

The device communicates with Master (microcontroller) through a serial I^{2}C (Inter-Integrated Circuit) interface and support standard (100 kbits/sec), fast (400 kbits/sec) and high-speed (3.4 Mbits/sec) modes.

Note:	The High-Speed mode is not recommended for V_{DD} less than 2.7V.

The serial I^{2}C is a bidirectional 2-wire data bus communication protocol using open-drain SCL and SDA lines.

The device can only be addressed as a slave. Once addressed, it can receive configuration bits with a write command or transmit the latest conversion results with a read command. The serial clock pin (SCL) is an input only and the serial data pin (SDA) is bidirectional. The Master starts communication by sending a START bit and terminates the communication by sending a STOP bit. In read mode, the device releases the SDA line after receiving NAK and STOP bits.

An example of a hardware connection diagram is shown in Figure 6-1. More details of the I^{2}C bus characteristic is described in **Section 5.6 "I^{2}C Bus Characteristics"**.

5.3.1 I^{2}C DEVICE ADDRESSING

The first byte after the START bit is always the address byte of the device, which includes the device code (4 bits), address bits (3 bits), and R/$\overline{W}$ bit. The device code of the MCP3425 is **`1101`**, which is programmed at the factory. The device code is followed by three address bits (A2, A1, A0) which are also programmed at the factory. The three address bits allow up to eight MCP3425 devices on the same data bus line.

The (R/$\overline{W}$) bit determines if the Master device wants to read the conversion data or write to the Configuration register. If the (R/$\overline{W}$) bit is set (read mode), the device outputs the conversion data in the following clocks. If the (R/$\overline{W}$) bit is cleared (write mode), the device expects a configuration byte in the following clocks. When the device receives the correct address byte, it outputs an acknowledge bit after the R/$\overline{W}$ bit.

Figure 5-1 shows the address byte. Figure 5-2 through Figure 5-3 show how to write the configuration register bits and read the conversion results.

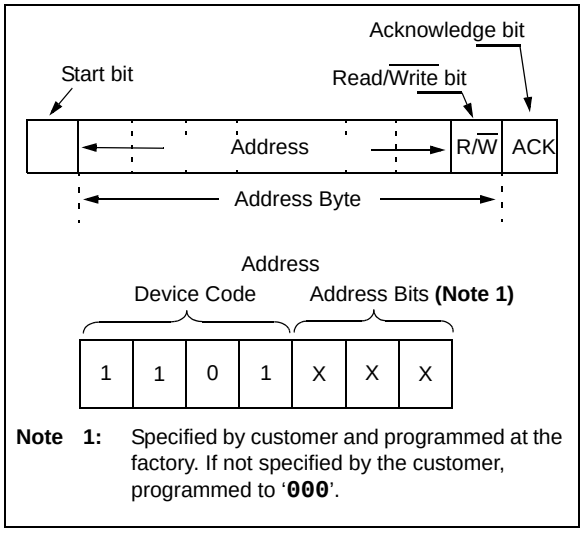

FIGURE 5-1: *MCP3425 Address Byte.*

5.3.2 WRITING A CONFIGURATION BYTE TO THE DEVICE

When the Master sends an address byte with the R/$\overline{W}$ bit low (R/$\overline{W}$ = 0), the MCP3425 expects one configuration byte following the address. Any byte sent after this second byte will be ignored. The user can change the operating mode of the device by writing the configuration register bits.

If the device receives a write command with a new configuration setting, the device immediately begins a new conversion and updates the conversion data.

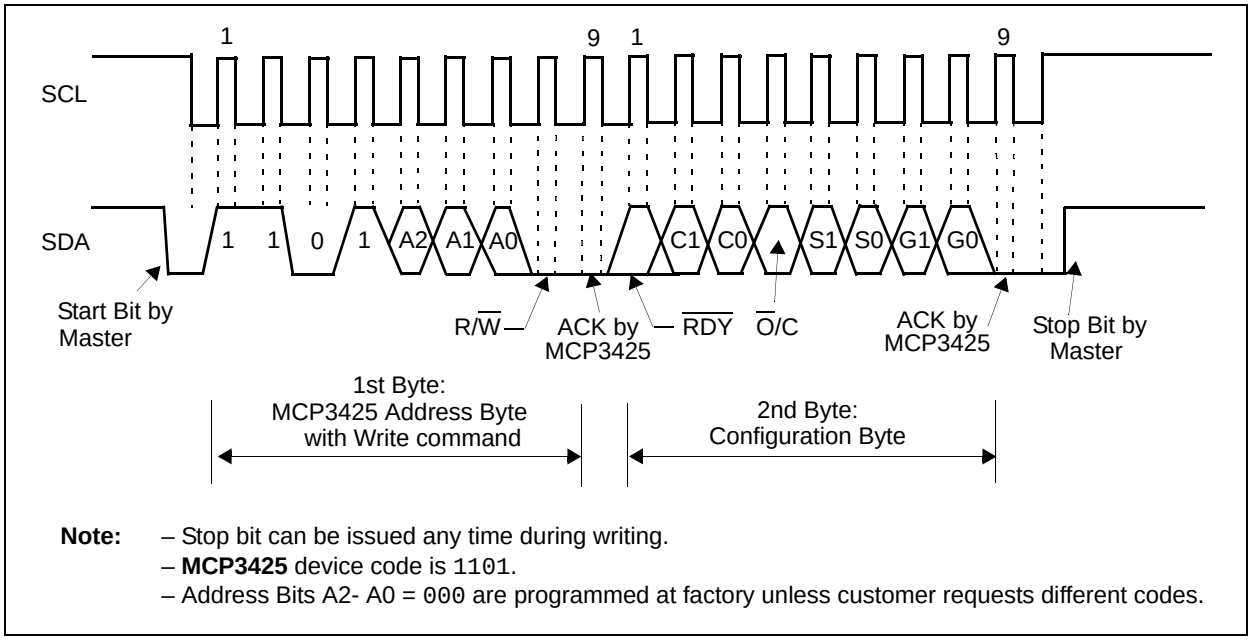

FIGURE 5-2: *Timing Diagram For Writing To The MCP3425.*

© 2009 Microchip Technology Inc.

5.3.3 READING DATA FROM THE DEVICE

When the Master sends a read command (R/$\overline{W}$ = 1), the MCP3425 outputs the conversion data bytes and configuration byte. Each byte consists of 8 bits with one acknowledge (ACK) bit. The ACK bit after the address byte is issued by the MCP3425 and the ACK bits after each conversion data bytes are issued by the Master.

When the device receives a read command, it outputs two data bytes followed by a configuration register. In 16 bit-conversion mode, the MSB (= sign bit) of the first data byte is D15. In 14-bit conversion mode, the first two bits in the first data byte are repeated MSB bits and can be ignored, and the 3rd bit (D13) is the MSB (=sign bit) of the conversion data. In 12-bit conversion mode, the first four bits are repeated MSB bits and can be ignored. The 5th bit (D11) of the byte represents the MSB (= sign bit) of the conversion data. Table 5-3 summarizes the conversion data output of each conversion mode.

The configuration byte follows the output data bytes. The device repeatedly outputs the configuration byte only if the Master sends clocks repeatedly after the data bytes.

The device terminates the current outputs when it receives a Not-Acknowledge (NAK), a repeated start or a stop bit at any time during the output bit stream. It is not required to read the configuration byte. However, the Master may read the configuration byte to check the $\overline{RDY}$ bit condition.The Master may continuously send clock (SCL) to repeatedly read the configuration byte (to check the $\overline{RDY}$ bit status).

Figure 5-3 shows the timing diagrams of the reading.

TABLE 5-3: OUTPUT CODES OF EACH RESOLUTION OPTION

Conversion Option	Digital Output Codes
16-bits	D15 ~ D8 (1st data byte) - D7 ~ D0 (2nd data byte) - Configuration byte. **(Note 1)**
14-bits	MMD13 ~ D8 (1st data byte) - D7 ~ D0 (2nd data byte) - Configuration byte. **(Note 2)**
12-bits	MMMMD11 ~ D8 (1st data byte) - D7 ~ D0 (2nd data byte) - Configuration byte. **(Note 3)**

Note 1: D15 is MSB (= sign bit).

2: D13 is MSB (= sign bit), M is repeated MSB of the data byte.

3: D11 is MSB (= sign bit), M is repeated MSB of the data byte.

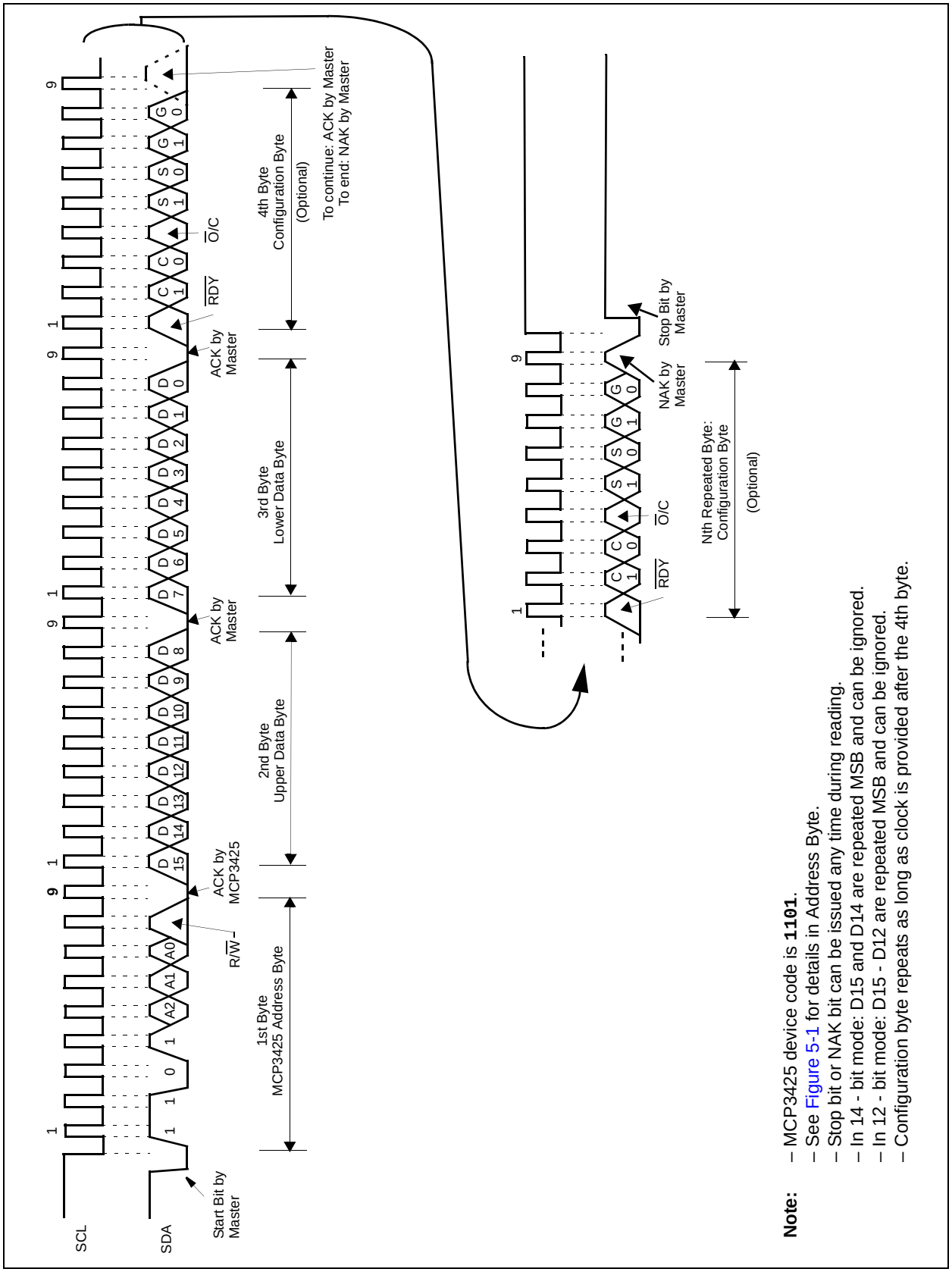

FIGURE 5-3: *iming Diagram For Reading From The MCP3425.*

© 2009 Microchip Technology Inc.

5.4 General Call

The device acknowledges the general call address (0x00 in the first byte). The meaning of the general call address is always specified in the second byte. Refer to Figure 5-4. The device supports the following two general calls.

For more information on the general call, or other I^{2}C modes, please refer to the Phillips I^{2}C specification.

5.4.1 GENERAL CALL RESET

The general call reset occurs if the second byte is `'00000110'` (06h). At the acknowledgement of this byte, the device will abort current conversion and perform an internal reset similar to a Power-On-Reset (POR). All configuration and data register bits are reset to default values.

5.4.2 GENERAL CALL CONVERSION

The general call conversion occurs if the second byte is `'00001000'` (08h). All devices on the bus initiate a conversion simultaneously. When the device receives this command, the configuration will be set to the One-Shot Conversion mode and a single conversion will be performed. The PGA and data rate settings are unchanged with this general call.

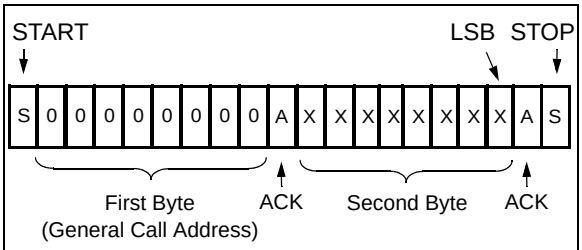

Note: The I^{2}C specification does not allow **"00000000"** (00h) in the second byte.

FIGURE 5-4: *General Call Address Format.*

5.5 High-Speed (HS) Mode

The I^{2}C specification requires that a high-speed mode device must be 'activated' to operate in high-speed mode. This is done by sending a special address byte of "`00001XXX`" following the START bit. The "`XXX`" bits are unique to the High-Speed (HS) mode Master. This byte is referred to as the High-Speed (HS) Master Mode Code (HSMMC). The MCP3425 device does not acknowledge this byte. However, upon receiving this code, the device switches on its HS mode filters and communicates up to 3.4 MHz on SDA and SCL bus lines. The device will switch out of the HS mode on the next STOP condition.

For more information on the HS mode, or other I^{2}C modes, please refer to the Phillips I^{2}C specification.

5.6 I^{2}C Bus Characteristics

The I^{2}C specification defines the following bus protocol:

- Data transfer may be initiated only when the bus is not busy
- During data transfer, the data line must remain stable whenever the clock line is HIGH. Changes in the data line while the clock line is HIGH will be interpreted as a START or STOP condition

Accordingly, the following bus conditions have been defined using Figure 5-5.

5.6.1 BUS NOT BUSY (A)

Both data and clock lines remain HIGH.

5.6.2 START DATA TRANSFER (B)

A HIGH to LOW transition of the SDA line while the clock (SCL) is HIGH determines a START condition. All commands must be preceded by a START condition.

5.6.3 STOP DATA TRANSFER (C)

A LOW to HIGH transition of the SDA line while the clock (SCL) is HIGH determines a STOP condition. All operations can be ended with a STOP condition.

5.6.4 DATA VALID (D)

The state of the data line represents valid data when, after a START condition, the data line is stable for the duration of the HIGH period of the clock signal.

The data on the line must be changed during the LOW period of the clock signal. There is one clock pulse per bit of data.

Each data transfer is initiated with a START condition and terminated with a STOP condition.

© 2009 Microchip Technology Inc.

5.6.5 ACKNOWLEDGE AND NON-ACKNOWLEDGE

The Master (microcontroller) and the slave (MCP3425) use an acknowledge pulse as a hand shake of communication for each byte. The ninth clock pulse of each byte is used for the acknowledgement. The clock pulse is always provided by the Master (microcontroller) and the acknowledgement is issued by the receiving device of the byte (Note: The transmitting device must release the SDA line during the acknowledge pulse.). The acknowledgement is achieved by pulling-down the SDA line “LOW” during the 9th clock pulse by the receiving device.

During reads, the Master (microcontroller) can terminate the current read operation by not providing an acknowledge bit (not Acknowledge (NAK)) on the last byte. In this case, the MCP3425 device releases the SDA line to allow the Master (microcontroller) to generate a STOP or repeated START condition.

The non-acknowledgement (NAK) is issued by providing the SDA line to “HIGH” during the 9th clock pulse.

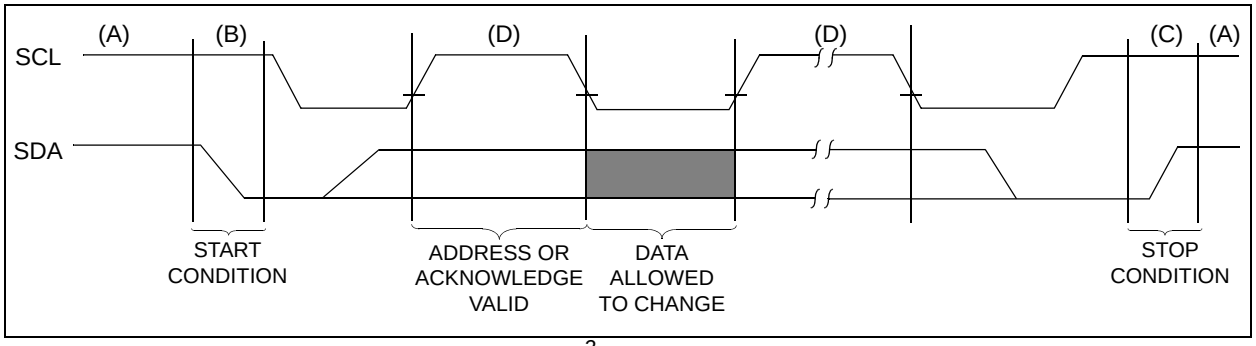

FIGURE 5-5: *Data Transfer Sequence on I^2C Serial Bus.*

© 2009 Microchip Technology Inc.

TABLE 5-4: I²C SERIAL TIMING SPECIFICATIONS

Electrical Specifications: Unless otherwise specified, all limits are specified for T_A = -40 to +85°C, V_{DD} = +2.7V to +5.0V, V_{SS} = 0V, V_{IN}+ = V_{IN}- = V_{REF}/2.

Parameters	Sym	Min	Typ	Max	Units	Conditions
Standard Mode (100 kHz)						
Clock frequency	f_{SCL}	—	—	100	kHz	
Clock high time	T_{HIGH}	4000	—	—	ns	
Clock low time	T_{LOW}	4700	—	—	ns	
SDA and SCL rise time	T_R	—	—	1000	ns	From V_{IL} to V_{IH} **(Note 1)**
SDA and SCL fall time	T_F	—	—	300	ns	From V_{IH} to V_{IL} **(Note 1)**
START condition hold time	$T_{HD:STA}$	4000	—	—	ns	
START (Repeated) condition setup time	$T_{SU:STA}$	4700	—	—	ns	
Data hold time	$TT_{HD:DAT}$	0	—	3450	ns	**(Note 3)**
Data input setup time	$T_{SU:DAT}$	250	—	—	ns	
STOP condition setup time	$T_{SU:STO}$	4000	—	—	ns	
Output valid from clock	T_{AA}	0	—	3750	ns	**(Note 2, Note 3)**
Bus free time	T_{BUF}	4700	—	—	ns	Time between START and STOP conditions.
Fast Mode (400 kHz)						
Clock frequency	TT_{SCL}	—	—	400	kHz	
Clock high time	T_{HIGH}	600	—	—	ns	
Clock low time	T_{LOW}	1300	—	—	ns	
SDA and SCL rise time	T_R	20 + 0.1Cb	—	300	ns	From V_{IL} to V_{IH} **(Note 1)**
SDA and SCL fall time	T_F	20 + 0.1Cb	—	300	ns	From V_{IH} to V_{IL} **(Note 1)**
START condition hold time	$T_{HD:STA}$	600	—	—	ns	
START (Repeated) condition setup time	$T_{SU:STA}$	600	—	—	ns	
Data hold time	$T_{HD:DAT}$	0	—	900	ns	**(Note 4)**
Data input setup time	$T_{SU:DAT}$	100	—	—	ns	
STOP condition setup time	$T_{SU:STO}$	600	—	—	ns	
Output valid from clock	T_{AA}	0	—	1200	ns	**(Note 2, Note 3)**
Bus free time	T_{BUF}	1300	—	—	ns	Time between START and STOP conditions.

Note 1: This parameter is ensured by characterization and not 100% tested.

2: This specification is not a part of the I²C specification. This specification is equivalent to the Data Hold Time ($T_{HD:DAT}$) plus SDA Fall (or rise) time: $T_{AA} = T_{HD:DAT} + T_F$ (OR T_R).

3: If this parameter is too short, it can create an unintended Start or Stop condition to other devices on the bus line. If this parameter is too long, Clock Low time (T_{LOW}) can be affected.

4: For Data Input: This parameter must be longer than t_{SP}. If this parameter is too long, the Data Input Setup ($T_{SU:DAT}$) or Clock Low time (T_{LOW}) can be affected.
For Data Output: This parameter is characterized, and tested indirectly by testing T_{AA} parameter.

TABLE 5-4: I²C SERIAL TIMING SPECIFICATIONS (CONTINUED)

Electrical Specifications: Unless otherwise specified, all limits are specified for T_A = -40 to +85°C, V_{DD} = +2.7V to +5.0V, V_{SS} = 0V, $V_{IN}+ = V_{IN}- = V_{REF}/2$.

Parameters	Sym	Min	Typ	Max	Units	Conditions
High Speed Mode (3.4 MHz)						
Clock frequency	f_{SCL}	—	—	3.4	MHz	C_b = 100 pF
		—	—	1.7	MHz	C_b = 400 pF
Clock high time	T_{HIGH}	60	—	—	ns	C_b = 100 pF, f_{SCL} = 3.4 MHz
		120	—	—	ns	C_b = 400 pF, f_{SCL} = 1.7 MHz
Clock low time	T_{LOW}	160	—	—	ns	C_b = 100 pF, f_{SCL} = 3.4 MHz
		320	—	—	ns	C_b = 400 pF, f_{SCL} = 1.7 MHz
SCL rise time **(Note 1)**	T_R	—	—	40	ns	From V_{IL} to V_{IH}, C_b = 100 pF, f_{SCL} = 3.4 MHz
		—	—	80	ns	From V_{IL} to V_{IH}, C_b = 400 pF, f_{SCL} = 1.7 MHz
SCL fall time **(Note 1)**	T_F	—	—	40	ns	From V_{IH} to V_{IL}, C_b = 100 pF, f_{SCL} = 3.4 MHz
		—	—	80	ns	From V_{IH} to V_{IL}, C_b = 400 pF, f_{SCL} = 1.7 MHz
SDA rise time **(Note 1)**	$T_{R: DAT}$	—	—	80	ns	From V_{IL} to V_{IH}, C_b = 100 pF, f_{SCL} = 3.4 MHz
		—	—	160	ns	From V_{IL} to V_{IH}, C_b = 400 pF, f_{SCL} = 1.7 MHz
SDA fall time **(Note 1)**	$T_{F: DATA}$	—	—	80	ns	From V_{IH} to V_{IL}, C_b = 100 pF, f_{SCL} = 3.4 MHz
		—	—	160	ns	From V_{IH} to V_{IL}, C_b = 400 pF, f_{SCL} = 1.7 MHz
Data hold time **(Note 4)**	$T_{HD:DAT}$	0	—	70	ns	C_b = 100 pF, f_{SCL} = 3.4 MHz
		0	—	150	ns	C_b = 400 pF, f_{SCL} = 1.7 MHz
Output valid from clock **(Notes 2 and 3)**	T_{AA}	—	—	150	ns	C_b = 100 pF, f_{SCL} = 3.4 MHz
		—	—	310	ns	C_b = 400 pF, f_{SCL} = 1.7 MHz
START condition hold time	$T_{HD:STA}$	160	—	—	ns	
START (Repeated) condition setup time	$T_{SU:STA}$	160	—	—	ns	
Data input setup time	$T_{SU:DAT}$	10	—	—	ns	
STOP condition setup time	$T_{SU:STO}$	160	—	—	ns	

Note 1: This parameter is ensured by characterization and not 100% tested.

2: This specification is not a part of the I²C specification. This specification is equivalent to the Data Hold Time ($T_{HD:DAT}$) plus SDA Fall (or rise) time: $T_{AA} = T_{HD:DAT} + T_F$ (OR T_R).

3: If this parameter is too short, it can create an unintended Start or Stop condition to other devices on the bus line. If this parameter is too long, Clock Low time (T_{LOW}) can be affected.

4: For Data Input: This parameter must be longer than t_{SP}. If this parameter is too long, the Data Input Setup ($T_{SU:DAT}$) or Clock Low time (T_{LOW}) can be affected.
For Data Output: This parameter is characterized, and tested indirectly by testing T_{AA} parameter.

© 2009 Microchip Technology Inc.

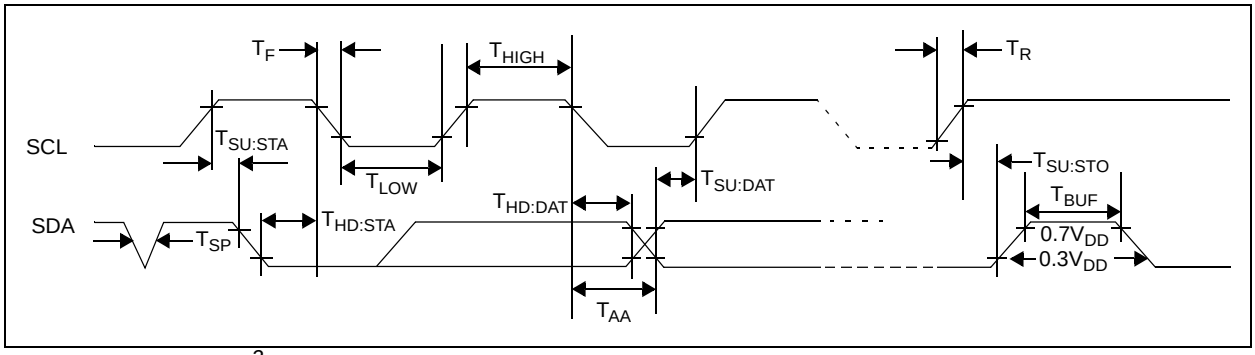

FIGURE 5-6: *I^2C Bus Timing Data.*

NOTES:

© 2009 Microchip Technology Inc.

6.0 BASIC APPLICATION CONFIGURATIONS AND EXAMPLES

The MCP3425 can be used for various precision analog-to-digital converter applications. The device operates with very simple connections to the application circuit. The following sections discuss the examples of the device connections and applications.

6.1 Connecting to the Application Circuits

6.1.1 BYPASS CAPACITORS ON V_{DD} PIN

For an accurate measurement, the application circuit needs a clean supply voltage and must block any noise signal to the MCP3425 device. Figure 6-1 shows an example of using two bypass capacitors (a 10 µF tantalum capacitor and a 0.1 µF ceramic capacitor) on the V_{DD} line of the MCP3425. These capacitors are helpful to filter out any high frequency noises on the V_{DD} line and also provide the momentary bursts of extra currents when the device needs from the supply. These capacitors should be placed as close to the V_{DD} pin as possible (within one inch). If the application circuit has separate digital and analog power supplies, the V_{DD} and V_{SS} of the MCP3425 device should reside on the analog plane.

6.1.2 CONNECTING TO I^2C BUS USING PULL-UP RESISTORS

The SCL and SDA pins of the MCP3425 are open-drain configurations. These pins require a pull-up resistor as shown in Figure 6-1. The value of these pull-up resistors depends on the operating speed and loading capacitance of the I^2C bus line. Higher value of pull-up resistor consumes less power, but increases the signal transition time (higher RC time constant) on the bus. Therefore, it can limit the bus operating speed. The lower value of resistor, on the other hand, consumes higher power, but allows higher operating speed. If the bus line has higher capacitance due to long bus line or high number of devices connected to the bus, a smaller pull-up resistor is needed to compensate the long RC time constant. The pull-up resistor is typically chosen between 5 kΩ and 10 kΩ ranges for standard and fast modes.

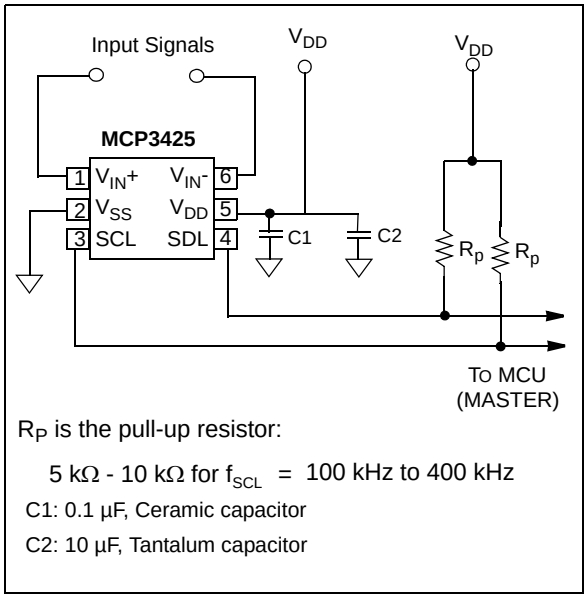

FIGURE 6-1: *Typical Connection Example.*

The number of devices connected to the bus is limited only by the maximum bus capacitance of 400 pF. The bus loading capacitance affects on the bus operating speed. Figure 6-2 shows an example of multiple device connections.

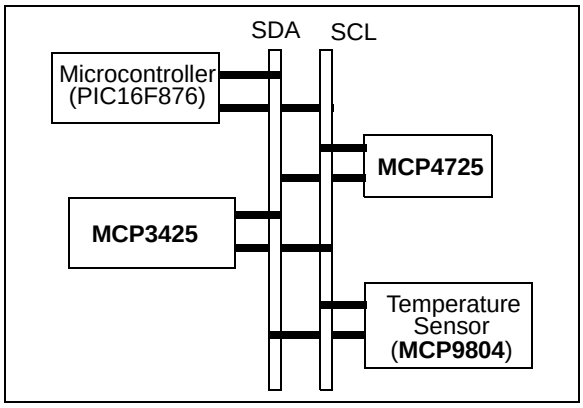

FIGURE 6-2: *Example of Multiple Device Connection on I^2C Bus.*

6.1.3 DEVICE COMMUNICATION TEST

The user can test the communication between the Master (MCU) and the MCP3425 by simply checking an acknowledge response from the MCP3425 after sending a read or write command. Here is an example using Figure 6-3:

a) Set the R/$\overline{W}$ bit "LOW" in the address byte.

b) Check the ACK pulse after sending the address byte.

If the device acknowledges (ACK = 0), then the device is connected, otherwise it is not connected.

c) Send a STOP bit.

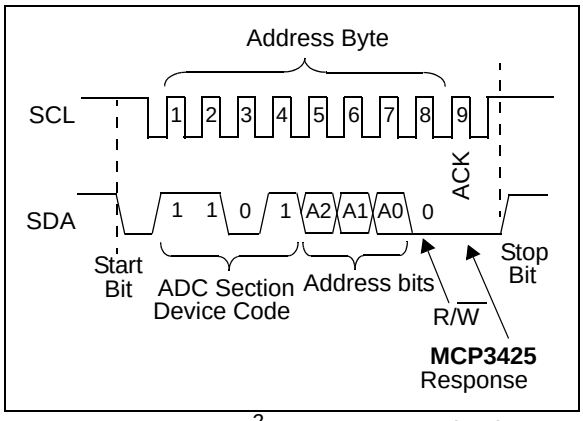

FIGURE 6-3: *I^2C Bus Communications Test.*

6.1.4 DIFFERENTIAL AND SINGLE-ENDED CONFIGURATION

Figure 6-4 shows typical connection examples for differential and single-ended inputs. Differential input signals are connected to the V_{IN}+ and V_{IN}- input pins. For the single-ended input, the input signal is applied to one of the input pins (typically connected to the V_{IN}+ pin) while the other input pin (typically V_{IN}- pin) is grounded. All device characteristics hold for the single-ended configuration, but this configuration loses one bit resolution because the input can only stand in positive half scale. Refer to **Section 1.0 "Electrical Characteristics"**.

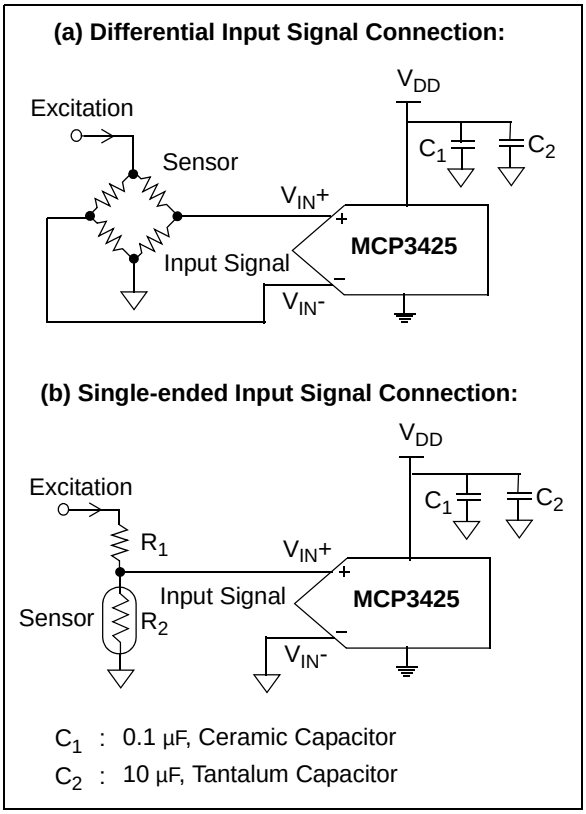

FIGURE 6-4: *Differential and Single-Ended Input Connections.*

© 2009 Microchip Technology Inc.

6.2 Application Examples

6.2.1 VOLTAGE MEASUREMENT

The MCP3425 device can be used in a broad range of sensor and data acquisition applications.

Figure 6-5 shows a circuit example measuring the battery voltage. When the input voltage is greater than the internal reference voltage (V_{REF} = 2.048V), it needs a voltage divider circuit to prevent the output code from being saturated. In the example, R_1 and R_2 form a voltage divider. The R_1 and R_2 are set to yield V_{IN} to be less than the internal reference voltage (V_{REF} = 2.048V).

If the input voltage range is much less than the internal reference voltage, the voltage divider at the input pin is not needed, and the user may use the internal PGA with a gain of up to 8.

When the voltage divider or internal PGA is used for the input signal, these factor must be taken into account when the user converts the output codes to the actual input voltage.

Find the Microchip Application Note AN1156 for the input voltage and current measurement using the MCP342X device family. The MCU firmware is well documented in the reference.

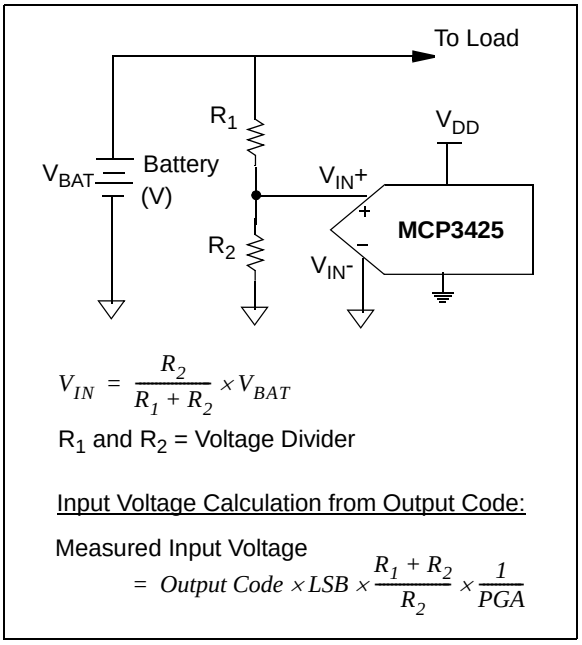

FIGURE 6-5: *Battery Voltage Measurement.*

6.2.2 CURRENT MEASUREMENT

Figure 6-6 shows a circuit example of current measurement. For the current measurement, the device measures the voltage across the current sensor, and converts it to current by dividing the measured voltage by a known resistance value of the current sensor. The voltage drops across the sensor is waste. Therefore, the current measurement often prefers to use a current sensor with smaller resistance value, which, in turn, requires high resolution ADC device. The high precision MCP342x devices from Microchip Technology Inc. are suitable for the current measurement with low resistive current sensors. The MSB (= sign bit) of the output code indicates the direction of the current.

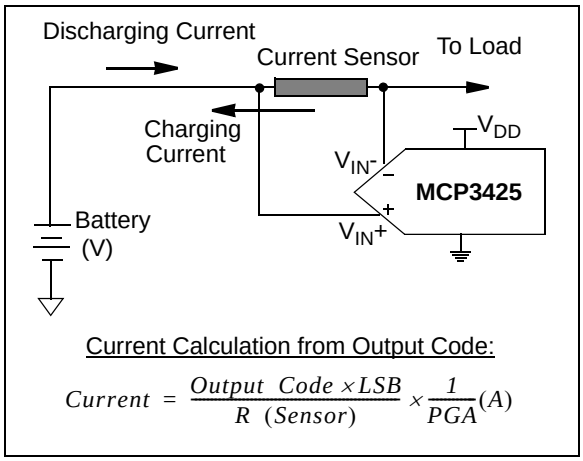

FIGURE 6-6: *Battery Current Measurement.*

6.2.3 PRESSURE MEASUREMENT

Figure 6-7 shows an example of measuring the pressure using NPP301 (manufactured by GE NovaSensor). No external signal conditioning circuit is needed by utilizing its internal PGA. The pressure sensor output is 20 mV/V. This gives 100 mV of full scale output for V_{DD} of 5V (sensor excitation voltage).

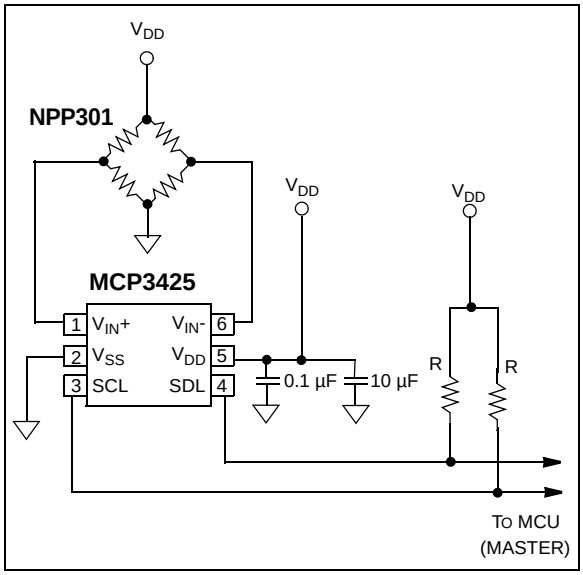

FIGURE 6-7: *Example of Pressure Measurement.*

6.2.4 WHEATSTONE BRIDGE TYPE SENSORS WITH SIGNAL CONDITIONING

Wheatstone bridge is one of the most common configurations in the sensor applications. Strain gauges and pressure sensors are the common examples. When the sensor output signal is small and the common mode noise level is large, it needs a signal conditioning circuit between the sensor and the MCP3425. Figure 6-8 and Figure 6-9 show examples of using the MCP6V01 (high precision auto-zeroed Op Amp) for the sensor signal conditioning. Figure 6-8 shows the interface circuit with a minimum of components between the sensor and the MCP3425, but it is not symmetric, and therefore, the ADC input becomes a single ended. On the other hand, the Figure 6-9 has a symmetric and differential output, but requires more components.

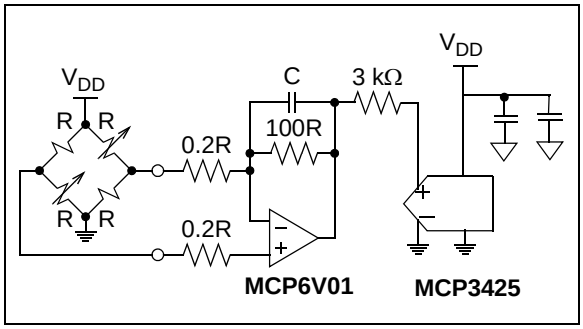

FIGURE 6-8: *Simple Signal Conditioning Design with Asymmetric Circuit.*

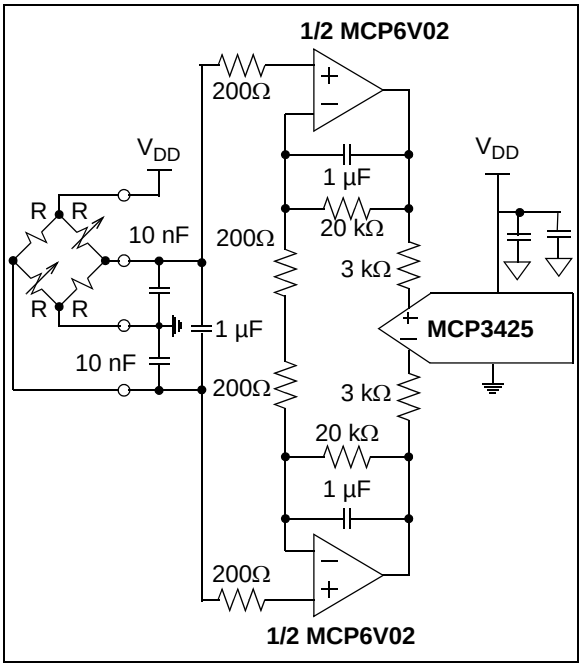

FIGURE 6-9: *High Performance Signal Conditioning Design with Symmetric Circuit.*

6.2.5 TEMPERATURE MEASUREMENT

Figure 6-10 shows an example of temperature measurement using a thermistor. This example can achieve a linear response over a 50°C temperature range. This can be implemented using a standard resistor with 1% tolerance in series with the thermistor. The value of the resistor is selected to be equal to the thermistor value at the mid-point of the desired temperature range.

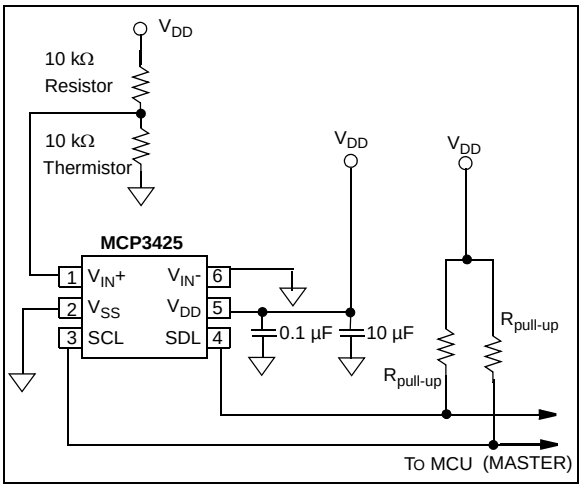

FIGURE 6-10: *Example of Temperature Measurement.*

© 2009 Microchip Technology Inc.

7.0 DEVELOPMENT TOOL SUPPORT

7.1 MCP3425 Evaluation Boards

The MCP3425 Evaluation Board is available from Microchip Technology Inc. This board works with Microchip's PICkit™ Serial Analyzer. The user can simply connect any sensing voltage to the input test pads of the board and read conversion codes using the easy-to-use PICkit™ Serial Analyzer. Refer to www.microchip.com for further information on this product's capabilities and availability.

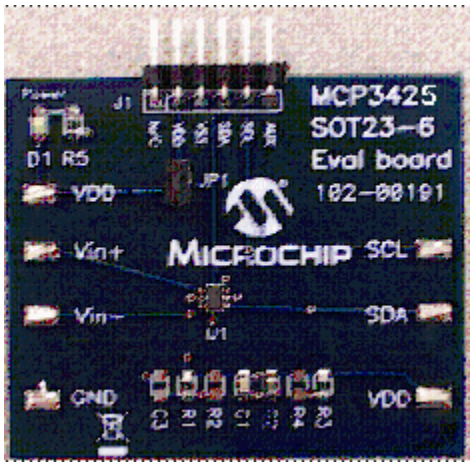

FIGURE 7-1: MCP3425 *Evaluation Board.*

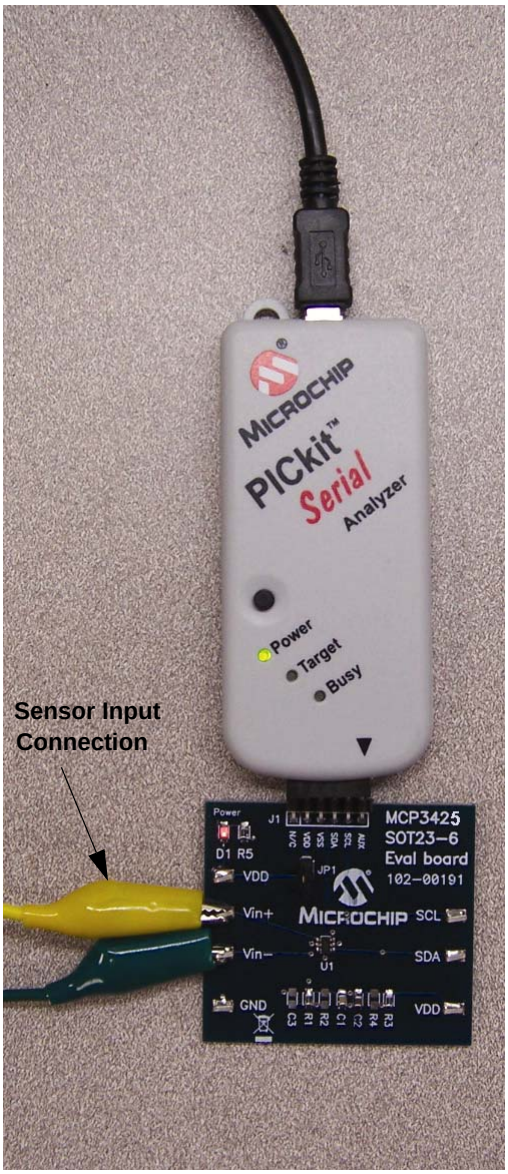

FIGURE 7-2: *Setup for the MCP3425 Evaluation Board with PICkit™ Serial Analyzer.*

NOTES:

© 2009 Microchip Technology Inc.

8.0 PACKAGING INFORMATION

8.1 Package Marking Information

6-Lead SOT-23

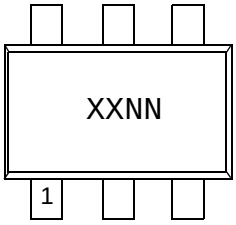

Part Number	Address Option	Code
MCP3425A0T-E/CH	A0 (000)	CQNN
MCP3425A1T-E/CH	A1 (001)	CRNN
MCP3425A2T-E/CH	A2 (010)	CSNN
MCP3425A3T-E/CH	A3 (011)	CTNN
MCP3425A4T-E/CH	A4 (100)	**Note 1**
MCP3425A5T-E/CH	A5 (101)	**Note 1**
MCP3425A6T-E/CH	A6 (110)	**Note 1**
MCP3425A7T-E/CH	A7 (111)	**Note 1**

Note 1: Contact Microchip Technology for these address option devices.

Example

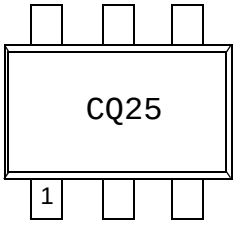

Legend:	XX...X	Customer-specific information
	Y	Year code (last digit of calendar year)
	YY	Year code (last 2 digits of calendar year)
	WW	Week code (week of January 1 is week ‘01’)
	NNN	Alphanumeric traceability code
	(e3)	Pb-free JEDEC designator for Matte Tin (Sn)
	*	This package is Pb-free. The Pb-free JEDEC designator ((e3)) can be found on the outer packaging for this package.

Note: In the event the full Microchip part number cannot be marked on one line, it will be carried over to the next line, thus limiting the number of available characters for customer-specific information.

6-Lead Plastic Small Outline Transistor (CH) [SOT-23]

Note: For the most current package drawings, please see the Microchip Packaging Specification located at http://www.microchip.com/packaging

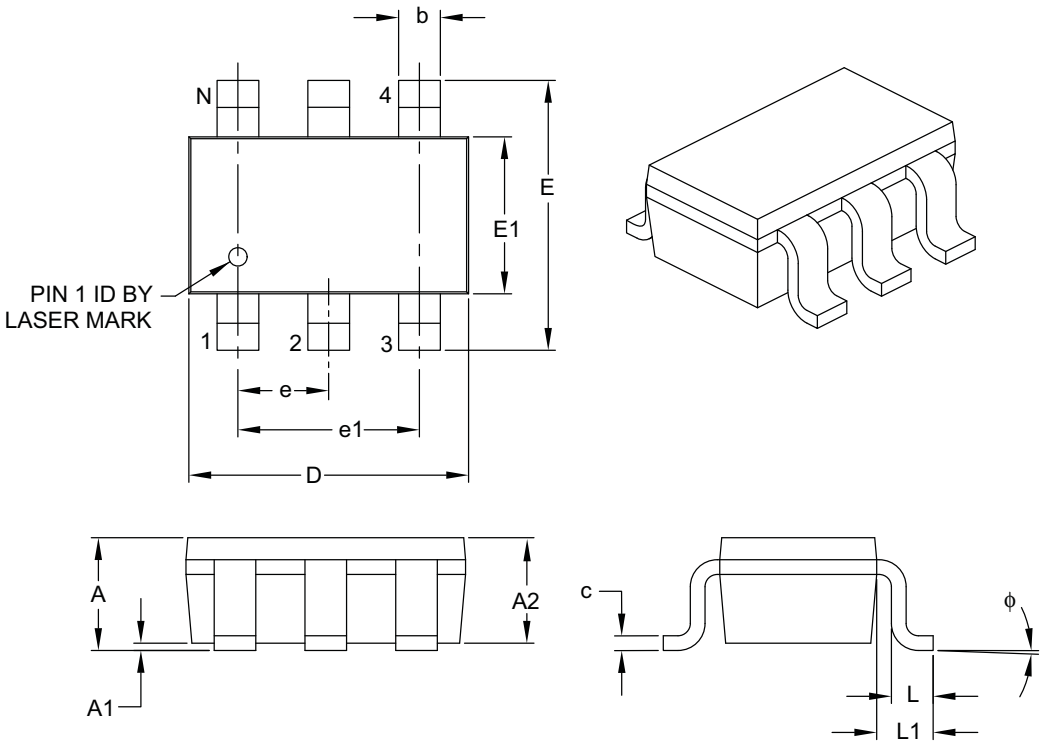

Units		MILLIMETERS		
Dimension Limits		MIN	NOM	MAX
Number of Pins	N	6		
Pitch	e	0.95 BSC		
Outside Lead Pitch	e1	1.90 BSC		
Overall Height	A	0.90	–	1.45
Molded Package Thickness	A2	0.89	–	1.30
Standoff	A1	0.00	–	0.15
Overall Width	E	2.20	–	3.20
Molded Package Width	E1	1.30	–	1.80
Overall Length	D	2.70	–	3.10
Foot Length	L	0.10	–	0.60
Footprint	L1	0.35	–	0.80
Foot Angle	ϕ	0°	–	30°
Lead Thickness	c	0.08	–	0.26
Lead Width	b	0.20	–	0.51

Notes:

1. Dimensions D and E1 do not include mold flash or protrusions. Mold flash or protrusions shall not exceed 0.127 mm per side.
2. Dimensioning and tolerancing per ASME Y14.5M.

   BSC: Basic Dimension. Theoretically exact value shown without tolerances.

Microchip Technology Drawing C04-028B

© 2009 Microchip Technology Inc.

APPENDIX A: REVISION HISTORY

Revision B (August 2009)

The following is the list of modifications:

1. Updated **Section 4.1 “General Overview”**.
2. Added new section: **Section 4.5 “Input Voltage Range”**.
3. Restructured information in **Section 4.9 “Digital Output Codes and Conversion to Real Values”**.
4. Updated information in Table 5-4 in **Section 5.0 “Using the MCP3425 Device”**.
5. Updated section **Section 6.0 “Basic Application Configurations and Examples”**.
6. Added new **Section 7.0 “Development TOOL Support”**.
7. Updated drawings in **Section 8.0 “Packaging Information”**.

Revision A (December 2007)

- Original Release of this Document.

NOTES:

© 2009 Microchip Technology Inc.

PRODUCT IDENTIFICATION SYSTEM

To order or obtain information, e.g., on pricing or delivery, refer to the factory or the listed sales office.

PART NO.	XX	X	X	/XX
Device	Address Options	Tape and Reel	Temperature Range	Package

Device: MCP3425: Single Channel ΔΣ A/D Converter

Address Options:

XX		A2	A1	A0
A0 *	=	0	0	0
A1	=	0	0	1
A2	=	0	1	0
A3	=	0	1	1

* Default option. Contact Microchip factory for other address options

Tape and Reel: T = Tape and Reel

Temperature Range: E = -40°C to +125°C

Package: CH = Plastic Small Outline Transistor (SOT-23-6), 6-lead

Examples:

a) MCP3425A0T-E/CH: Tape and Reel, Single Channel ΔΣ A/D Converter, SOT-23-6 package, Address Option = A0.

b) MCP3425A1T-E/CH: Tape and Reel, Single Channel ΔΣ A/D Converter, SOT-23-6 package, Address Option = A1.

c) MCP3425A2T-E/CH: Tape and Reel, Single Channel ΔΣ A/D Converter, SOT-23-6 package, Address Option = A2.

d) MCP3425A3T-E/CH: Tape and Reel, Single Channel ΔΣ A/D Converter, SOT-23-6 package, Address Option = A3.

NOTES:

© 2009 Microchip Technology Inc.

Note the following details of the code protection feature on Microchip devices:

- Microchip products meet the specification contained in their particular Microchip Data Sheet.
- Microchip believes that its family of products is one of the most secure families of its kind on the market today, when used in the intended manner and under normal conditions.
- There are dishonest and possibly illegal methods used to breach the code protection feature. All of these methods, to our knowledge, require using the Microchip products in a manner outside the operating specifications contained in Microchip's Data Sheets. Most likely, the person doing so is engaged in theft of intellectual property.
- Microchip is willing to work with the customer who is concerned about the integrity of their code.
- Neither Microchip nor any other semiconductor manufacturer can guarantee the security of their code. Code protection does not mean that we are guaranteeing the product as "unbreakable."

Code protection is constantly evolving. We at Microchip are committed to continuously improving the code protection features of our products. Attempts to break Microchip's code protection feature may be a violation of the Digital Millennium Copyright Act. If such acts allow unauthorized access to your software or other copyrighted work, you may have a right to sue for relief under that Act.

Information contained in this publication regarding device applications and the like is provided only for your convenience and may be superseded by updates. It is your responsibility to ensure that your application meets with your specifications. MICROCHIP MAKES NO REPRESENTATIONS OR WARRANTIES OF ANY KIND WHETHER EXPRESS OR IMPLIED, WRITTEN OR ORAL, STATUTORY OR OTHERWISE, RELATED TO THE INFORMATION, INCLUDING BUT NOT LIMITED TO ITS CONDITION, QUALITY, PERFORMANCE, MERCHANTABILITY OR FITNESS FOR PURPOSE**.** Microchip disclaims all liability arising from this information and its use. Use of Microchip devices in life support and/or safety applications is entirely at the buyer's risk, and the buyer agrees to defend, indemnify and hold harmless Microchip from any and all damages, claims, suits, or expenses resulting from such use. No licenses are conveyed, implicitly or otherwise, under any Microchip intellectual property rights.

Trademarks

The Microchip name and logo, the Microchip logo, dsPIC, KEELOQ, KEELOQ logo, MPLAB, PIC, PICmicro, PICSTART, rfPIC and UNI/O are registered trademarks of Microchip Technology Incorporated in the U.S.A. and other countries.

FilterLab, Hampshire, HI-TECH C, Linear Active Thermistor, MXDEV, MXLAB, SEEVAL and The Embedded Control Solutions Company are registered trademarks of Microchip Technology Incorporated in the U.S.A.

Analog-for-the-Digital Age, Application Maestro, CodeGuard, dsPICDEM, dsPICDEM.net, dsPICworks, dsSPEAK, ECAN, ECONOMONITOR, FanSense, HI-TIDE, In-Circuit Serial Programming, ICSP, ICEPIC, Mindi, MiWi, MPASM, MPLAB Certified logo, MPLIB, MPLINK, mTouch, Omniscient Code Generation, PICC, PICC-18, PICkit, PICDEM, PICDEM.net, PICtail, PIC^{32} logo, REAL ICE, rfLAB, Select Mode, Total Endurance, TSHARC, WiperLock and ZENA are trademarks of Microchip Technology Incorporated in the U.S.A. and other countries.

SQTP is a service mark of Microchip Technology Incorporated in the U.S.A.

All other trademarks mentioned herein are property of their respective companies.

© 2009, Microchip Technology Incorporated, Printed in the U.S.A., All Rights Reserved.

Printed on recycled paper.

QUALITY MANAGEMENT SYSTEM
CERTIFIED BY DNV
ISO/TS 16949:2002

Microchip received ISO/TS-16949:2002 certification for its worldwide headquarters, design and wafer fabrication facilities in Chandler and Tempe, Arizona; Gresham, Oregon and design centers in California and India. The Company's quality system processes and procedures are for its PIC® MCUs and dsPIC® DSCs, KEELOQ® code hopping devices, Serial EEPROMs, microperipherals, nonvolatile memory and analog products. In addition, Microchip's quality system for the design and manufacture of development systems is ISO 9001:2000 certified.

WORLDWIDE SALES AND SERVICE

AMERICAS

Corporate Office
2355 West Chandler Blvd.
Chandler, AZ 85224-6199
Tel: 480-792-7200
Fax: 480-792-7277
Technical Support:
http://support.microchip.com
Web Address:
www.microchip.com

Atlanta
Duluth, GA
Tel: 678-957-9614
Fax: 678-957-1455

Boston
Westborough, MA
Tel: 774-760-0087
Fax: 774-760-0088

Chicago
Itasca, IL
Tel: 630-285-0071
Fax: 630-285-0075

Cleveland
Independence, OH
Tel: 216-447-0464
Fax: 216-447-0643

Dallas
Addison, TX
Tel: 972-818-7423
Fax: 972-818-2924

Detroit
Farmington Hills, MI
Tel: 248-538-2250
Fax: 248-538-2260

Kokomo
Kokomo, IN
Tel: 765-864-8360
Fax: 765-864-8387

Los Angeles
Mission Viejo, CA
Tel: 949-462-9523
Fax: 949-462-9608

Santa Clara
Santa Clara, CA
Tel: 408-961-6444
Fax: 408-961-6445

Toronto
Mississauga, Ontario,
Canada
Tel: 905-673-0699
Fax: 905-673-6509

ASIA/PACIFIC

Asia Pacific Office
Suites 3707-14, 37th Floor
Tower 6, The Gateway
Harbour City, Kowloon
Hong Kong
Tel: 852-2401-1200
Fax: 852-2401-3431

Australia - Sydney
Tel: 61-2-9868-6733
Fax: 61-2-9868-6755

China - Beijing
Tel: 86-10-8528-2100
Fax: 86-10-8528-2104

China - Chengdu
Tel: 86-28-8665-5511
Fax: 86-28-8665-7889

China - Hong Kong SAR
Tel: 852-2401-1200
Fax: 852-2401-3431

China - Nanjing
Tel: 86-25-8473-2460
Fax: 86-25-8473-2470

China - Qingdao
Tel: 86-532-8502-7355
Fax: 86-532-8502-7205

China - Shanghai
Tel: 86-21-5407-5533
Fax: 86-21-5407-5066

China - Shenyang
Tel: 86-24-2334-2829
Fax: 86-24-2334-2393

China - Shenzhen
Tel: 86-755-8203-2660
Fax: 86-755-8203-1760

China - Wuhan
Tel: 86-27-5980-5300
Fax: 86-27-5980-5118

China - Xiamen
Tel: 86-592-2388138
Fax: 86-592-2388130

China - Xian
Tel: 86-29-8833-7252
Fax: 86-29-8833-7256

China - Zhuhai
Tel: 86-756-3210040
Fax: 86-756-3210049

ASIA/PACIFIC

India - Bangalore
Tel: 91-80-3090-4444
Fax: 91-80-3090-4080

India - New Delhi
Tel: 91-11-4160-8631
Fax: 91-11-4160-8632

India - Pune
Tel: 91-20-2566-1512
Fax: 91-20-2566-1513

Japan - Yokohama
Tel: 81-45-471- 6166
Fax: 81-45-471-6122

Korea - Daegu
Tel: 82-53-744-4301
Fax: 82-53-744-4302

Korea - Seoul
Tel: 82-2-554-7200
Fax: 82-2-558-5932 or
82-2-558-5934

Malaysia - Kuala Lumpur
Tel: 60-3-6201-9857
Fax: 60-3-6201-9859

Malaysia - Penang
Tel: 60-4-227-8870
Fax: 60-4-227-4068

Philippines - Manila
Tel: 63-2-634-9065
Fax: 63-2-634-9069

Singapore
Tel: 65-6334-8870
Fax: 65-6334-8850

Taiwan - Hsin Chu
Tel: 886-3-6578-300
Fax: 886-3-6578-370

Taiwan - Kaohsiung
Tel: 886-7-536-4818
Fax: 886-7-536-4803

Taiwan - Taipei
Tel: 886-2-2500-6610
Fax: 886-2-2508-0102

Thailand - Bangkok
Tel: 66-2-694-1351
Fax: 66-2-694-1350

EUROPE

Austria - Wels
Tel: 43-7242-2244-39
Fax: 43-7242-2244-393

Denmark - Copenhagen
Tel: 45-4450-2828
Fax: 45-4485-2829

France - Paris
Tel: 33-1-69-53-63-20
Fax: 33-1-69-30-90-79

Germany - Munich
Tel: 49-89-627-144-0
Fax: 49-89-627-144-44

Italy - Milan
Tel: 39-0331-742611
Fax: 39-0331-466781

Netherlands - Drunen
Tel: 31-416-690399
Fax: 31-416-690340

Spain - Madrid
Tel: 34-91-708-08-90
Fax: 34-91-708-08-91

UK - Wokingham
Tel: 44-118-921-5869
Fax: 44-118-921-5820

03/26/09

© 2009 Microchip Technology Inc.

Общество с ограниченной ответственностью «МосЧип» ИНН 7719860671 / КПП 771901001
Адрес: 105318, г.Москва, ул.Щербаковская д.3, офис 1107

Данный компонент на территории Российской Федерации

Вы можете приобрести в компании MosChip.

Для оперативного оформления запроса Вам необходимо перейти по данной ссылке:

http://moschip.ru/get-element

Вы можете разместить у нас заказ для любого Вашего проекта, будь то серийное производство или разработка единичного прибора.

В нашем ассортименте представлены ведущие мировые производители активных и пассивных электронных компонентов.

Нашей специализацией является поставка электронной компонентной базы двойного назначения, продукции таких производителей как XILINX, Intel (ex.ALTERA), Vicor, Microchip, Texas Instruments, Analog Devices, Mini-Circuits, Amphenol, Glenair.

Сотрудничество с глобальными дистрибьюторами электронных компонентов, предоставляет возможность заказывать и получать с международных складов практически любой перечень компонентов в оптимальные для Вас сроки.

На всех этапах разработки и производства наши партнеры могут получить квалифицированную поддержку опытных инженеров.

Система менеджмента качества компании отвечает требованиям в соответствии с ГОСТ Р ИСО 9001, ГОСТ РВ 0015-002 и ЭС РД 009

Офис по работе с юридическими лицами:

105318, г.Москва, ул.Щербаковская д.3, офис 1107, 1118, ДЦ «Щербаковский»

Телефон: +7 495 668-12-70 (многоканальный)

Факс: +7 495 668-12-70 (доб.304)

E-mail: info@moschip.ru

Skype отдела продаж:
moschip.ru
moschip.ru_4
moschip.ru_6
moschip.ru_9