PRODUCT NUMBER
SEE TABLE

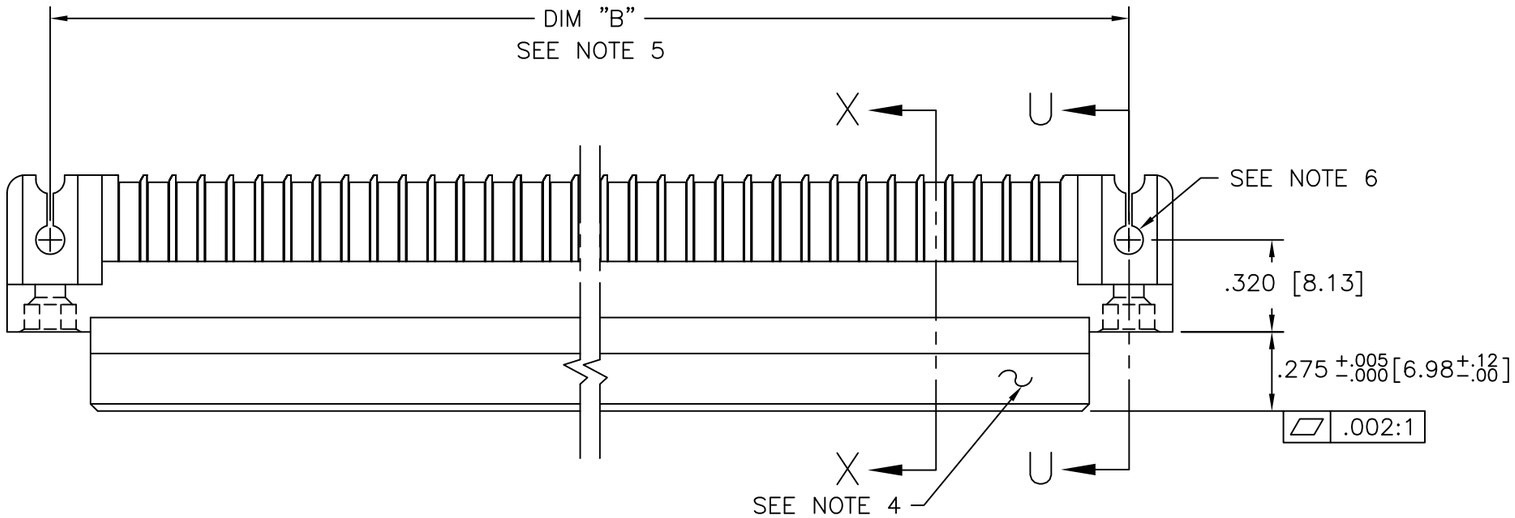

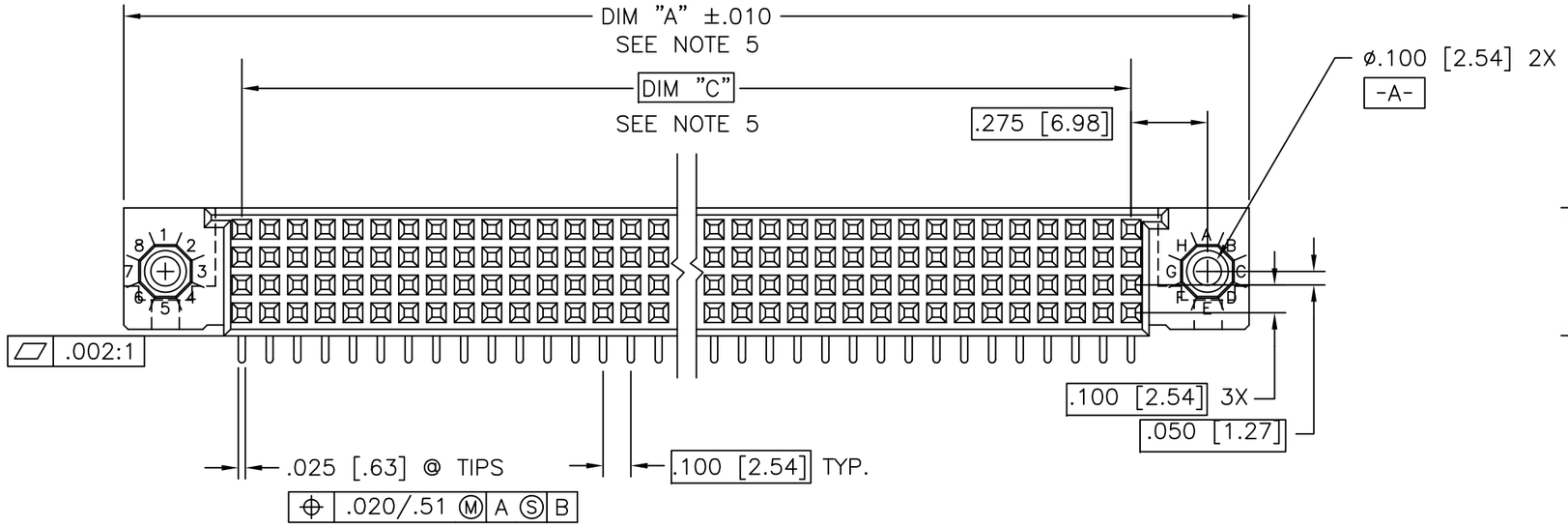

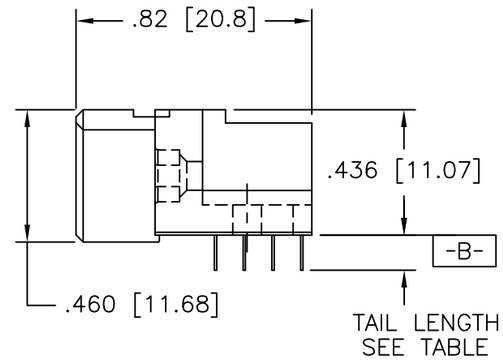

mat'l. code				surface	tolerance	projection	product family
NOTE 3				ISO 1302	ISO 406 ISO 1101		HPC
ltr	ecn no	dr	date	tolerances unless otherwise specified			title
T	ELX-I-26895	MJA	05/03/17	angles	linear .XX±.01/.X±0.3	INCH/MM	4 ROW R/A RECEPTACLE
–	–	–	–		.XXX±.005/.XX±0.13		SOLDER TAIL, 0 GUIDE PIN
M	V05-0207	VS	3/2/05	0°±2°	.XXXX±.0020/.XXX±0.051	scale 1:1	
N	V05-1052	HTB	12/7/05	dr	G.PETERS 6/4/96	Amphenol FCi	dwg no 50295 sheet 1 of 5 size A3
P	M06-0283	MHT	7/27/06	engr	S.CLARK 6/3/96		
R	M07-0099	AGS	2/09/07	chr	M JACOB 05/03/17		
S	M08-0280	AGS	9/30/08	appd	BIJU K PAUL 05/03/17		type Product Customer Drawing

sheet index	revision	T	T	T	S	S
	sheet	1	2	3	4	5

Amphenol FCi
Copyright AFCI

PRODUCT NUMBER
SEE TABLE

NOTES:

1. PRODUCT NUMBERING CODE:
   50295 – X YYY Z S LF
   - LF — LEAD FREE (OPTIONAL)
   - S — SPECIAL FEATURES (NOTE 6)
   - Z — TAIL LENGTH (SEE TABLE)
   - YYY — NO. OF POSITIONS (NOTE 2)
   - X — PLATING (SEE TABLE)
   - 50295 — BASE NUMBER

2. THIS PRODUCT IS CONFIGURED IN SIZES OF 6 thru 80 COLUMNS IN INCREMENTS OF ONE.
   i.e.: 6,7,8,9.....79,80.

3. HOUSING MATERIAL: GLASS & MINERAL FILLED HIGH–TEMP THERMOPLASTIC, FLAME RETARDANT PER UL94 V–0.
   CONTACT MATERIAL: BeCu

4. MANUFACTURE'S NAME, PART NUMBER AND LOT CODE TO APPEAR ON THIS SURFACE PER BUS–12–108.

5. LENGTH DIMENSION FORMULAS:
   DIM "A" = .100/2.54 x NO. OF COLUMNS + .75/19.1
   DIM "B" = .100/2.54 x NO. OF COLUMNS + .450/11.43
   DIM "C" = .100/2.54 x NO. OF COLUMNS – .100/2.54

6. SPECIAL FEATURES (SEE SHEET 3) AND TABLE.
   – = IF CODE IS OMITTED FROM PRODUCT NUMBER: CONNECTOR IS PROVIDED AS SHOWN, NO SPECIAL FEATURES ARE SELECTED. FOR P.C.B. ATTACHEMENT IN A ø.120[3.05] MOUNTING HOLE.
   "A" = IF SPECIFIED, PRE–INSTALLED CLAW FOR P.C.B. ATTACHMENT IN A ø.100[2.54] MOUNTING HOLE. AVAILABLE IN 'E" TAIL LENGTH ONLY.
   "B" = IF SPECIFIED, PRE–INSTALLED CLAW FOR P.C.B. ATTACHMENT IN A ø.120[3.05] MOUNTING HOLE.
   "C" = IF SPECIFIED, MOLDED GUIDE PINS WITH PRE–INSTALLED CLAW FOR P.C.B. ATTACHMENT IN A ø.120[3.05] MOUNTING HOLE.
   "D" = IF SPECIFIED, MOLDED GUIDE PINS WITH ø.100[2.54] MOUNTING HOLE (NO CLAW).

7. CLAW DIMENSION DETERMINED BY P.C.B. HOLE DIAMETER.

8. THIS PRODUCT (WITH "LF" SUFFIX) MEETS EUROPEAN UNION DIRECTIVES AND OTHER COUNTRY REGULATIONS AS DESCRIBED IN GS–22–008.

9. THIS HOUSING WILL WITHSTAND EXPOSURE TO 260 DEGREES C PEAK TEMPERATURE FOR 10–30 SECONDS IN A CONVECTION, INFRA–RED OR VAPOR PHASE REFLOW OVEN.

10. PLATING OPTION:
    MAY BE EITHER GOLD OR GXT PLATED AT MANUFACTURER'S OPTION.

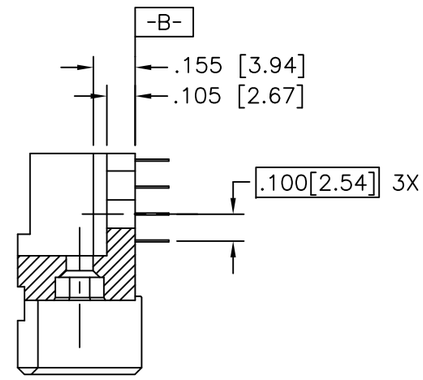

SECTION U–U
NO SPECIAL FEATURE

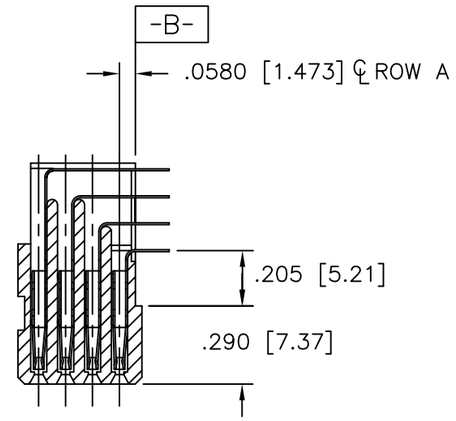

SECTION X–X

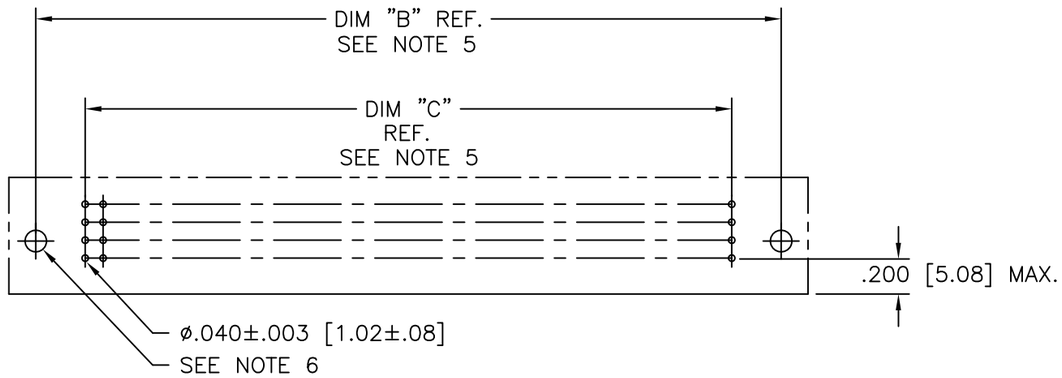

RECOMMENDED PCB LAYOUT
(ALL HOLES LOCATED ON .100 [2.54] GRID UNLESS OTHERWISE SPECIFIED)

mat'l. code NOTE 3				surface ISO 1302 √		tolerance ISO 406 ISO 1101	projection
ltr	ecn no	dr	date	tolerances unless otherwise specified			
T				angles	linear	.XX±.01/.X±0.3	INCH/MM
						.XXX±.005/.XX±0.13	
				0°±2°		.XXXX±.0020/.XXX±0.051	scale 1:1
				dr	G.PETERS	6/4/96	
				engr	S.CLARK	6/3/96	
				chr	M JACOB	05/03/17	
				appd	BIJU K PAUL	05/03/17	
sheet index	revision sheet						

product family: HPC

title: 4 ROW R/A RECEPTACLE SOLDER TAIL, 0 GUIDE PIN

dwg no: 50295 — sheet 2 of 5 — size A3

type: Product Customer Drawing

Amphenol FCi

Copyright AFCI

PRODUCT NUMBER
SEE TABLE

SPECIAL FEATURE OPTION A

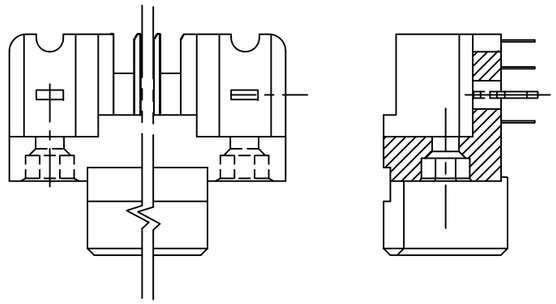

SECTION U–U

SPECIAL FEATURE OPTION B

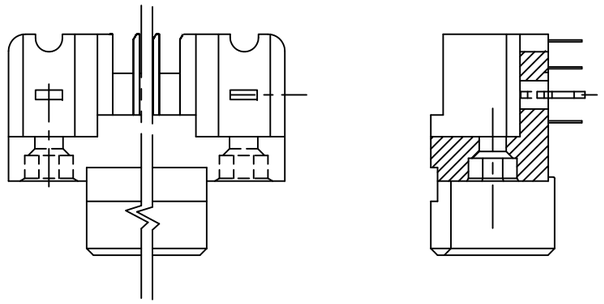

SECTION U–U

SPECIAL FEATURE OPTION C

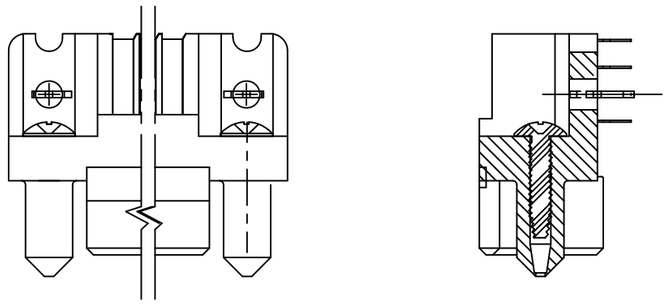

SECTION U–U

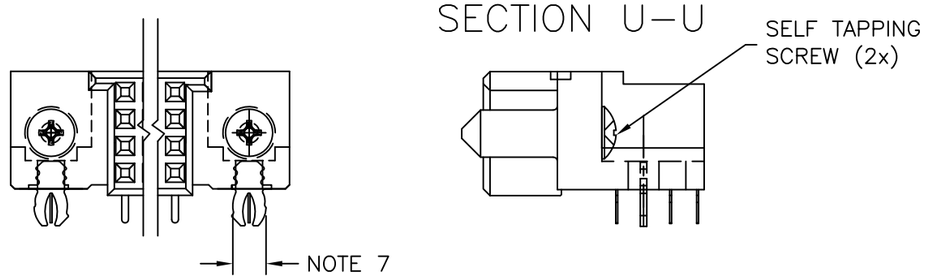

SPECIAL FEATURE OPTION D

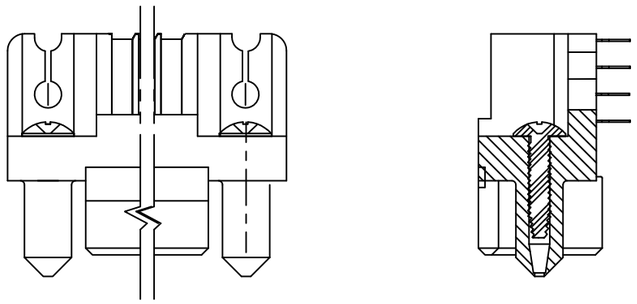

SECTION U–U

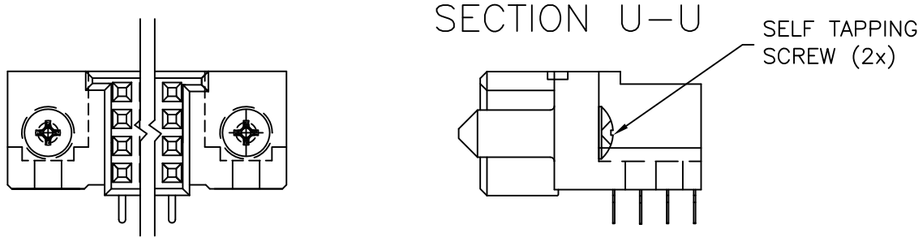

mat'l. code				surface	tolerance	projection	product family
NOTE 3				ISO 1302 ✓	ISO 406 ISO 1101		HPC
ltr	ecn no	dr	date	tolerances unless otherwise specified			title
T				angles	linear: .XX±.01/.X±0.3	INCH/MM	4 ROW R/A RECEPTACLE SOLDER TAIL, 0 GUIDE PIN
					.XXX±.005/.XX±0.13		
				0°±2°	.XXXX±.0020/.XXX±0.051	scale 1:1	
				dr	G.PETERS 6/4/96	Amphenol FCi	dwg no 50295 — sheet 3 of 5 — size A3
				engr	S.CLARK 6/3/96		
				chr	M JACOB 05/03/17		
				appd	BIJU K PAUL 05/03/17		type Product Customer Drawing
sheet index	revision sheet						

Amphenol FCi
Copyright AFCI

form: A3

PRODUCT NUMBER NOTE 1 AND 2	NUMBER OF POSITIONS SEE NOTE 2	TAIL LENGTH ±.010/0.25	SPECIAL FEATURES SEE NOTE 6	TAIL PLATING	CONTACT PLATING SEE NOTE 10
50295–1YYYE	YYY	.125/3.18	NONE	TIN–LEAD	30μ"/0.76μ Au
50295–1YYYEA	YYY	.125/3.18	"A"		30μ"/0.76μ Au
50295–1YYYEB	YYY	.125/3.18	"B"		30μ"/0.76μ Au
50295–1YYYEC	YYY	.125/3.18	"C"		30μ"/0.76μ Au
50295–1YYYED	YYY	.125/3.18	"D"		30μ"/0.76μ Au
50295–1YYYF	YYY	.145/3.68	NONE		30μ"/0.76μ Au
50295–1YYYFB	YYY	.145/3.68	"B"		30μ"/0.76μ Au
50295–1YYYFC	YYY	.145/3.68	"C"		30μ"/0.76μ Au
50295–1YYYFD	YYY	.145/3.68	"D"		30μ"/0.76μ Au
50295–1YYYH	YYY	.180/4.57	NONE		30μ"/0.76μ Au
50295–1YYYHB	YYY	.180/4.57	"B"		30μ"/0.76μ Au
50295–1YYYHC	YYY	.180/4.57	"C"		30μ"/0.76μ Au
50295–1YYYHD	YYY	.180/4.57	"D"		30μ"/0.76μ Au
50295–3YYYE	YYY	.125/3.18	NONE		50μ"/1.27μ Au
50295–3YYYEA	YYY	.125/3.18	"A"		50μ"/1.27μ Au
50295–3YYYEB	YYY	.125/3.18	"B"		50μ"/1.27μ Au
50295–3YYYEC	YYY	.125/3.18	"C"		50μ"/1.27μ Au
50295–3YYYED	YYY	.125/3.18	"D"		50μ"/1.27μ Au
50295–3YYYF	YYY	.145/3.68	NONE		50μ"/1.27μ Au
50295–3YYYFB	YYY	.145/3.68	"B"		50μ"/1.27μ Au
50295–3YYYFC	YYY	.145/3.68	"C"		50μ"/1.27μ Au
50295–3YYYFD	YYY	.145/3.68	"D"		50μ"/1.27μ Au
50295–3YYYH	YYY	.180/4.57	NONE		50μ"/1.27μ Au
50295–3YYYHB	YYY	.180/4.57	"B"		50μ"/1.27μ Au
50295–3YYYHC	YYY	.180/4.57	"C"		50μ"/1.27μ Au
50295–3YYYHD	YYY	.180/4.57	"D"	TIN–LEAD	50μ"/1.27μ Au

PRODUCT NUMBER NOTE 1 AND 2	NUMBER OF POSITIONS SEE NOTE 2	TAIL LENGTH ±.010/0.25	SPECIAL FEATURES SEE NOTE 6	TAIL PLATING	CONTACT PLATING SEE NOTE 10
50295–1YYYELF	YYY	.125/3.18	NONE	TIN	30μ"/0.76μ Au
50295–1YYYEALF	YYY	.125/3.18	"A"		30μ"/0.76μ Au
50295–1YYYEBLF	YYY	.125/3.18	"B"		30μ"/0.76μ Au
50295–1YYYECLF	YYY	.125/3.18	"C"		30μ"/0.76μ Au
50295–1YYYEDLF	YYY	.125/3.18	"D"		30μ"/0.76μ Au
50295–1YYYFLF	YYY	.145/3.68	NONE		30μ"/0.76μ Au
50295–1YYYFBLF	YYY	.145/3.68	"B"		30μ"/0.76μ Au
50295–1YYYFCLF	YYY	.145/3.68	"C"		30μ"/0.76μ Au
50295–1YYYFDLF	YYY	.145/3.68	"D"		30μ"/0.76μ Au
50295–1YYYHLF	YYY	.180/4.57	NONE		30μ"/0.76μ Au
50295–1YYYHBLF	YYY	.180/4.57	"B"		30μ"/0.76μ Au
50295–1YYYHCLF	YYY	.180/4.57	"C"		30μ"/0.76μ Au
50295–1YYYHDLF	YYY	.180/4.57	"D"		30μ"/0.76μ Au
50295–3YYYELF	YYY	.125/3.18	NONE		50μ"/1.27μ Au
50295–3YYYEALF	YYY	.125/3.18	"A"		50μ"/1.27μ Au
50295–3YYYEBLF	YYY	.125/3.18	"B"		50μ"/1.27μ Au
50295–3YYYECLF	YYY	.125/3.18	"C"		50μ"/1.27μ Au
50295–3YYYEDLF	YYY	.125/3.18	"D"		50μ"/1.27μ Au
50295–3YYYFLF	YYY	.145/3.68	NONE		50μ"/1.27μ Au
50295–3YYYFBLF	YYY	.145/3.68	"B"		50μ"/1.27μ Au
50295–3YYYFCLF	YYY	.145/3.68	"C"		50μ"/1.27μ Au
50295–3YYYFDLF	YYY	.145/3.68	"D"		50μ"/1.27μ Au
50295–3YYYHLF	YYY	.180/4.57	NONE		50μ"/1.27μ Au
50295–3YYYHBLF	YYY	.180/4.57	"B"		50μ"/1.27μ Au
50295–3YYYHCLF	YYY	.180/4.57	"C"		50μ"/1.27μ Au
50295–3YYYHDLF	YYY	.180/4.57	"D"	TIN	50μ"/1.27μ Au

TABLE CONTINUED ON SHEET 5

mat'l. code NOTE 3	surface ISO 1302	tolerance ISO 406 ISO 1101	projection
ltr / ecn no / dr / date	tolerances unless otherwise specified		
S	angles	linear .XX±.01/.X±0.3	INCH/MM
	0°±2°	.XXX±.005/.XX±0.13	scale 1:1
		.XXXX±.0020/.XXX±0.051	
	dr G.PETERS	6/4/96	Amphenol FCi
	engr S.CLARK	6/3/96	
	chr S.CLARK	6/4/96	
	appd S.CLARK	6/4/96	
sheet index / revision sheet			

product family: HPC

title: 4 ROW R/A RECEPTACLE SOLDER TAIL, 0 GUIDE PIN

dwg no: 50295 — sheet 4 of 5 — size A3

type: Product Customer Drawing

Amphenol FCi
Copyright AFCI

PRODUCT NUMBER NOTE 1 AND 2	NUMBER OF POSITIONS SEE NOTE 2	TAIL LENGTH ±.010/0.25	SPECIAL FEATURES SEE NOTE 6	TAIL PLATING	CONTACT PLATING SEE NOTE 10
50295–5YYYE	YYY	.125/3.18	NONE	TIN/LEAD	30µ"/0.76µ GXT
50295–5YYYELF	YYY	.125/3.18	NONE	TIN	
50295–5YYYEA	YYY	.125/3.18	"A"	TIN/LEAD	
50295–5YYYEALF	YYY	.125/3.18	"A"	TIN	
50295–5YYYEB	YYY	.125/3.18	"B"	TIN/LEAD	
50295–5YYYEBLF	YYY	.125/3.18	"B"	TIN	
50295–5YYYEC	YYY	.125/3.18	"C"	TIN/LEAD	
50295–5YYYECLF	YYY	.125/3.18	"C"	TIN	
50295–5YYYED	YYY	.125/3.18	"D"	TIN/LEAD	
50295–5YYYEDLF	YYY	.125/3.18	"D"	TIN	
50295–5YYYF	YYY	.145/3.68	NONE	TIN/LEAD	
50295–5YYYFLF	YYY	.145/3.68	NONE	TIN	
50295–5YYYFB	YYY	.145/3.68	"B"	TIN/LEAD	
50295–5YYYFBLF	YYY	.145/3.68	"B"	TIN	
50295–5YYYFC	YYY	.145/3.68	"C"	TIN/LEAD	
50295–5YYYFCLF	YYY	.145/3.68	"C"	TIN	
50295–5YYYFD	YYY	.145/3.68	"D"	TIN/LEAD	
50295–5YYYFDLF	YYY	.145/3.68	"D"	TIN	
50295–5YYYH	YYY	.180/4.57	NONE	TIN/LEAD	
50295–5YYYHLF	YYY	.180/4.57	NONE	TIN	
50295–5YYYHB	YYY	.180/4.57	"B"	TIN/LEAD	
50295–5YYYHBLF	YYY	.180/4.57	"B"	TIN	
50295–5YYYHC	YYY	.180/4.57	"C"	TIN/LEAD	
50295–5YYYHCLF	YYY	.180/4.57	"C"	TIN	
50295–5YYYHD	YYY	.180/4.57	"D"	TIN/LEAD	
50295–5YYYHDLF	YYY	.180/4.57	"D"	TIN	30µ"/0.76µ GXT

mat'l. code NOTE 3	surface ISO 1302 √	tolerance ISO 406 ISO 1101	projection
ltr ecn no dr date	tolerances unless otherwise specified		product family HPC
S	angles	linear .XX±.01/.X±0.3	title 4 ROW R/A RECEPTACLE SOLDER TAIL, 0 GUIDE PIN
		.XXX±.005/.XX±0.13	INCH/MM
	0°±2°	.XXXX±.0020/.XXX±0.051	scale 1:1
	dr G.PETERS	6/4/96	dwg no 50295 sheet 5 of 5 size A3
	engr S.CLARK	6/3/96	Amphenol FCi
	chr S.CLARK	6/4/96	
	appd S.CLARK	6/4/96	type Product Customer Drawing
sheet index / revision sheet			

Copyright AFCI

form: A3

Общество с ограниченной ответственностью «МосЧип» ИНН 7719860671 / КПП 771901001
Адрес: 105318, г.Москва, ул.Щербаковская д.3, офис 1107

Данный компонент на территории Российской Федерации

Вы можете приобрести в компании MosChip.

Для оперативного оформления запроса Вам необходимо перейти по данной ссылке:

http://moschip.ru/get-element

Вы можете разместить у нас заказ для любого Вашего проекта, будь то серийное производство или разработка единичного прибора.

В нашем ассортименте представлены ведущие мировые производители активных и пассивных электронных компонентов.

Нашей специализацией является поставка электронной компонентной базы двойного назначения, продукции таких производителей как XILINX, Intel (ex.ALTERA), Vicor, Microchip, Texas Instruments, Analog Devices, Mini-Circuits, Amphenol, Glenair.

Сотрудничество с глобальными дистрибьюторами электронных компонентов, предоставляет возможность заказывать и получать с международных складов практически любой перечень компонентов в оптимальные для Вас сроки.

На всех этапах разработки и производства наши партнеры могут получить квалифицированную поддержку опытных инженеров.

Система менеджмента качества компании отвечает требованиям в соответствии с ГОСТ Р ИСО 9001, ГОСТ РВ 0015-002 и ЭС РД 009

Офис по работе с юридическими лицами:

105318, г.Москва, ул.Щербаковская д.3, офис 1107, 1118, ДЦ «Щербаковский»

Телефон: +7 495 668-12-70 (многоканальный)

Факс: +7 495 668-12-70 (доб.304)

E-mail: info@moschip.ru

Skype отдела продаж:
moschip.ru
moschip.ru_4
moschip.ru_6
moschip.ru_9