FAIRCHILD™

Is Now Part of

ON Semiconductor®

To learn more about ON Semiconductor, please visit our website at
www.onsemi.com

Please note: As part of the Fairchild Semiconductor integration, some of the Fairchild orderable part numbers will need to change in order to meet ON Semiconductor's system requirements. Since the ON Semiconductor product management systems do not have the ability to manage part nomenclature that utilizes an underscore (_), the underscore (_) in the Fairchild part numbers will be changed to a dash (-). This document may contain device numbers with an underscore (_). Please check the ON Semiconductor website to verify the updated device numbers. The most current and up-to-date ordering information can be found at www.onsemi.com. Please email any questions regarding the system integration to Fairchild_questions@onsemi.com.

ON Semiconductor and the ON Semiconductor logo are trademarks of Semiconductor Components Industries, LLC dba ON Semiconductor or its subsidiaries in the United States and/or other countries. ON Semiconductor owns the rights to a number of patents, trademarks, copyrights, trade secrets, and other intellectual property. A listing of ON Semiconductor's product/patent coverage may be accessed at www.onsemi.com/site/pdf/Patent-Marking.pdf. ON Semiconductor reserves the right to make changes without further notice to any products herein. ON Semiconductor makes no warranty, representation or guarantee regarding the suitability of its products for any particular purpose, nor does ON Semiconductor assume any liability arising out of the application or use of any product or circuit, and specifically disclaims any and all liability, including without limitation special, consequential or incidental damages. Buyer is responsible for its products and applications using ON Semiconductor products, including compliance with all laws, regulations and safety requirements or standards, regardless of any support or applications information provided by ON Semiconductor. "Typical" parameters which may be provided in ON Semiconductor data sheets and/or specifications can and do vary in different applications and actual performance may vary over time. All operating parameters, including "Typicals" must be validated for each customer application by customer's technical experts. ON Semiconductor does not convey any license under its patent rights nor the rights of others. ON Semiconductor products are not designed, intended, or authorized for use as a critical component in life support systems or any FDA Class 3 medical devices or medical devices with a same or similar classification in a foreign jurisdiction or any devices intended for implantation in the human body. Should Buyer purchase or use ON Semiconductor products for any such unintended or unauthorized application, Buyer shall indemnify and hold ON Semiconductor and its officers, employees, subsidiaries, affiliates, and distributors harmless against all claims, costs, damages, and expenses, and reasonable attorney fees arising out of, directly or indirectly, any claim of personal injury or death associated with such unintended or unauthorized use, even if such claim alleges that ON Semiconductor was negligent regarding the design or manufacture of the part. ON Semiconductor is an Equal Opportunity/Affirmative Action Employer. This literature is subject to all applicable copyright laws and is not for resale in any manner.

December 2014

FAN4010
High-Side Current Sensor

Features at +5 V

- Low Cost, Accurate, High-Side Current Sensing
- Output Voltage Scaling
- Up to 2.5 V Sense Voltage
- 2 V to 6 V Supply Range
- 2 µA Typical Offset Current
- 3.5 µA Quiescent Current
- -0.2% Accuracy
- 6-Lead MicroPak™ MLP Package

Applications Battery Chargers

- Battery Chargers
- Smart Battery Packs
- DC Motor Control
- Over-Current Monitor
- Power Management
- Programmable Current Source

Description

The FAN4010 is a high-side current sense amplifier designed for battery-powered systems. Using the FAN4010 for high-side power-line monitoring does not interfere with the battery charger's ground path. The FAN4010 is designed for portable PCs, cellular phones, and other portable systems where battery / DC power-line monitoring is critical.

To provide a high level of flexibility, the FAN4010 functions with an external sense resistor to set the range of load current to be monitored. It has a current output that can be converted to a ground-referred voltage with a single resistor, accommodating a wide range of battery voltages and currents. The FAN4010 features allow it to be used for gas gauging as well as uni-directional or bi-directional current monitoring.

Ordering Information

Part Number	Operating Temperature Range	Top Mark	Package	Packing Method
FAN4010IL6X	-40°C to +85°C	PX	6-Lead, Molded Leadless Package (MLP)	Tape & Reel
FAN4010IL6X_F113(1)				

Notes:
1. Legacy product number; please order FAN4010IL6X for new designs.
2. All packages are lead free per JEDEC: J-STD-020B standard.
3. Moisture sensitivity level for all parts is MSL-1.

MicroPak™ is a trademark of Fairchild Semiconductor Corporation.

© 2007 Fairchild Semiconductor Corporation

Block Diagram and Typical Circuit

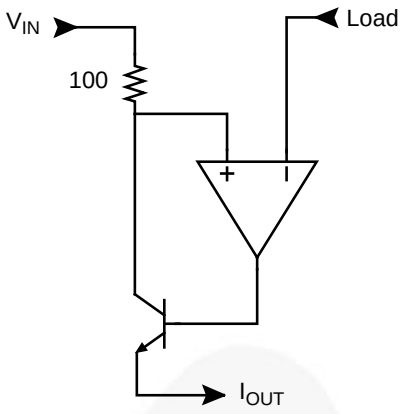

Figure 1. Functional Block Diagram

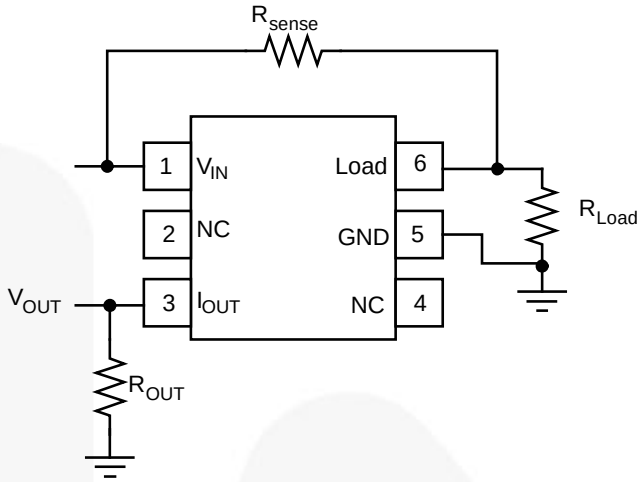

Figure 2. Typical Circuit

Pin Configuration

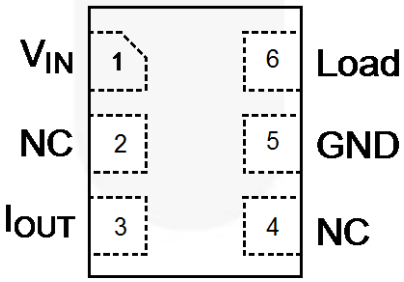

Figure 3. Pin Assignment (Top Through View)

Pin Descriptions

Name	Type	Description
2, 4	NC	No Connect; leave pin floating
5	GND	Ground
3	I_{OUT}	Output Current, proportional to V_{IN}-V_{LOAD}
1	V_{IN}	Input Voltage, Supply Voltage
6	Load	Connection to load or battery

Absolute Maximum Ratings

Stresses exceeding the absolute maximum ratings may damage the device. The device may not function or be operable above the recommended operating conditions and stressing the parts to these levels is not recommended. In addition, extended exposure to stresses above the recommended operating conditions may affect device reliability. The absolute maximum ratings are stress ratings only.

Symbol	Parameter		Min.	Typ.	Max.	Unit
V_S	Supply Voltage		0		6.3	V
V_{IN}	Input Voltage Range		0		6.3	V
T_J	Junction Temperature				+150	°C
T_{STG}	Storage Temperature Range		-65		+150	°C
T_L	Reflow Temperature, Soldering				+260	°C
Θ_{JA}	Package Thermal Resistance[4]			456		°C/W
ESD	Electrostatic Discharge Protection	Human Body Model, JESD22-A114			5000	V
		Charged Device Model, JESD22-C101			1000	

Note:

4. Package thermal resistance (Θ_{JA}), JEDEC standard, multi-layer test boards, still air.

Recommended Operating Conditions

The Recommended Operating Conditions table defines the conditions for actual device operation. Recommended operating conditions are specified to ensure optimal performance to the datasheet specifications. Fairchild does not recommend exceeding them or designing to Absolute Maximum Ratings.

Symbol	Parameter	Min.	Max.	Unit
T_A	Operating Temperature Range	-40	+85	°C
V_S	Supply Voltage Range	2	6	V
V_{IN}	Input Voltage	2	6	V
V_{SENSE}	Sensor Voltage Range, $V_{SENSE}=V_{IN}-V_{LOAD}$, $R_{OUT}=0\ \Omega$		2.5	V

Electrical Characteristics at +5 V

T_A = 25°C, V_S = V_{IN} = 5 V, R_{OUT} = 100 Ω, R_{SENSE} = 100 Ω, unless otherwise noted.

Symbol	Parameter	Conditions	Min.	Typ.	Max.	Unit
Frequency Domain Response						
B_{WSS}	Small Signal Bandwidth	P_{IN}=-40 dBm(5), V_{SENSE}=10 mV		600		kHz
B_{WLS}	Large Signal Bandwidth	P_{IN}=-20 dBm(6), V_{SENSE}=100 mV		2		MHz
V_{IN}	Input Voltage Range	V_{IN}=V_S	2		6	V
I_{OUT}	Output Current(7,8)	V_{SENSE}=0 mV	0	1	9	µA
		V_{SENSE}=10 mV	90	100	110	
		V_{SENSE}=100 mV	0.975	1.000	1.025	mA
		V_{SENSE}=200 mV	1.95	2.00	2.05	
		V_{SENSE}=1 V	9.7	10.0	10.3	
I_S	Supply Current(7)	V_{SENSE}=0 V, GND Pin Current		3.5	5.0	µA
I_{SENSE}	Load Pin Input Current			2		nA
A_{CY}	Accuracy	R_{SENSE}=100 Ω, R_{SENSE}=200 mV(7)	-2.5	-0.2	2.5	%
G_m	Transconductance	I_{OUT}/V_{SENSE}		10000		µA/V

Notes:
5. -40 dBm = 6.3 mVpp into 50 Ω.
6. -20 dBm = 63 mVpp into 50 Ω.
7. 100% tested at 25°C.
8. Includes input offset voltage contribution.

Typical Performance Characteristics

T_A = 25°C, V_S = V_{IN} = 5 V, R_{OUT} = 100 Ω, R_{SENSE} = 100 Ω, unless otherwise noted.

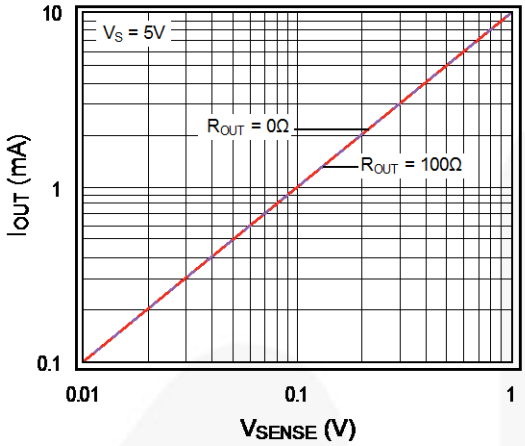

Figure 4. V_{SENSE} vs. Output Current

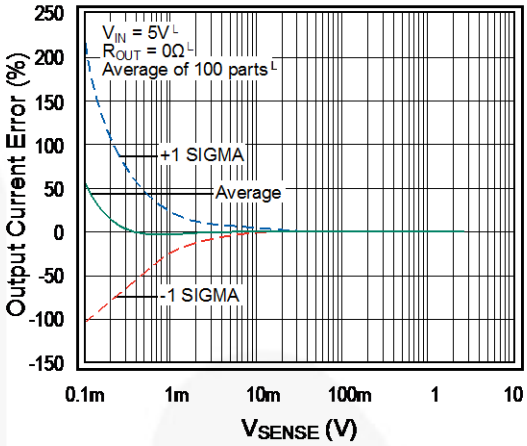

Figure 5. Output Current Error vs. V_{SENSE}

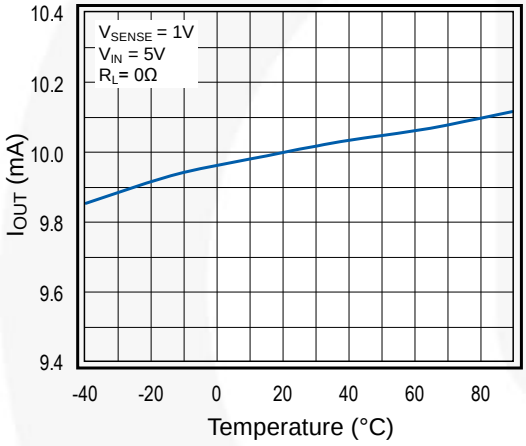

Figure 6. Output Current vs. Temperature

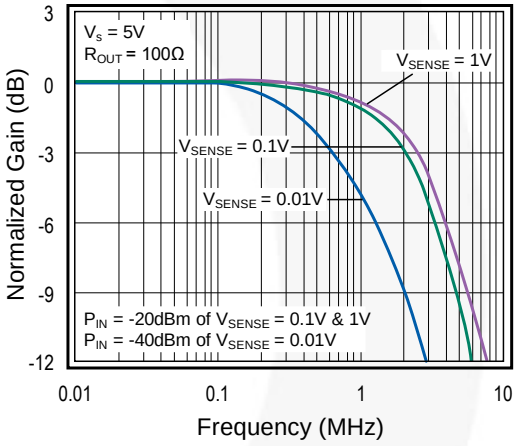

Figure 7. Frequency Response

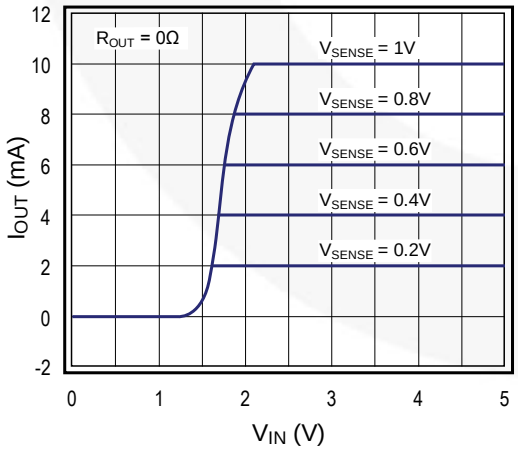

Figure 8. Transfer Characteristics

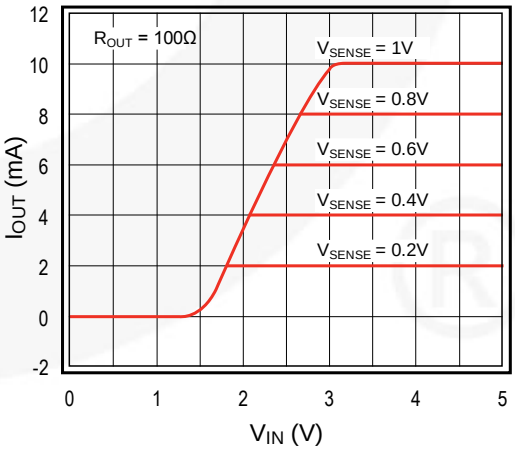

Figure 9. Transfer Characteristics

Typical Performance Characteristics (Continued)

T_A = 25°C, V_S = V_{IN} = 5 V, R_{OUT} = 100 Ω, R_{SENSE} = 100 Ω, unless otherwise noted.

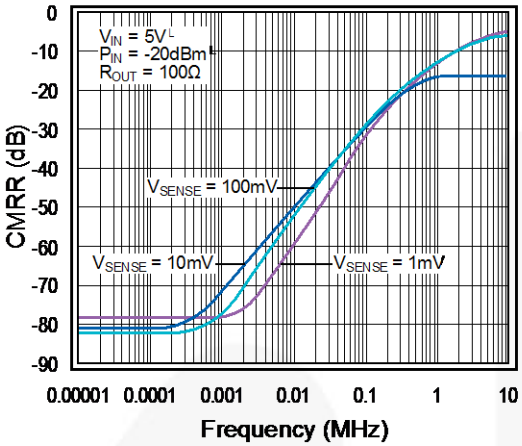

Figure 10. CMRR vs. Frequency

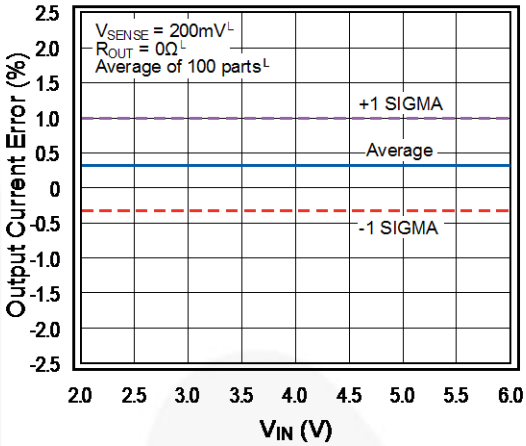

Figure 11. V_{IN} vs. Output Current Error

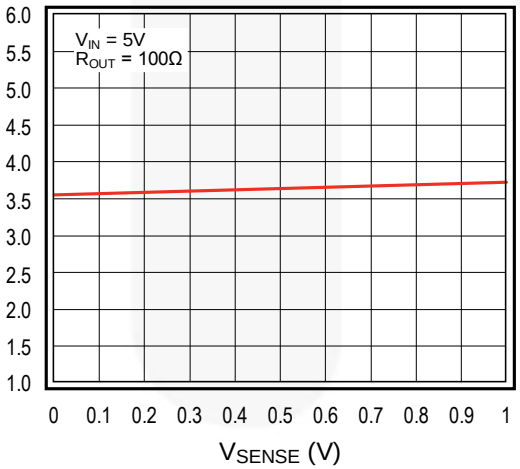

Figure 12. Supply Current vs. V_{SENSE}

Application Information

Detailed Description

The FAN4010 measures the voltage drop (V_{SENSE}) across an external sense resistor in the high-voltage side of the circuit. V_{SENSE} is converted to a linear current via an internal operational amplifier and precision 100 Ω resistor. The value of this current is V_{SENSE}/100 Ω (internal). Output current flows from the I_{OUT} pin to an external resistor R_{OUT} to generate an output voltage proportional to the current flowing to the load.

Use the following equations to scale a load current to an output voltage:

$$V_{SENSE} = I_{LOAD} \bullet R_{SENSE} \quad (1)$$

$$V_{OUT} = 0.01 \times V_{SENSE} \times R_{OUT} \quad (2)$$

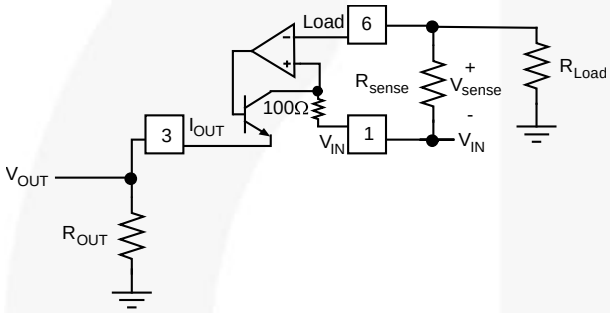

Figure 13. Functional Circuit

Selecting R_{SENSE}

Selection of R_{SENSE} is a balance between desired accuracy and allowable voltage loss. Although the FAN4010 is optimized for high accuracy with low V_{SENSE} values, a larger R_{SENSE} value provides additional accuracy. However, larger values of R_{SENSE} create a larger voltage drop, reducing the effective voltage available to the load. This can be troublesome in low-voltage applications. Because of this, the maximum expected load current and allowable load voltage should be well understood. Although higher values of V_{SENSE} can be used, R_{SENSE} should be chosen to satisfy the following condition:

$$10\text{mV} < V_{SENSE} < 200mV \quad (3)$$

For low-cost applications where accuracy is not as important, a portion of the printed circuit board (PCB) trace can be used as an R_{SENSE} resistor. Figure 14 shows an example of this configuration. The resistivity of a 0.1-inch wide trace of two-ounce copper is about 30 mΩ/ft. Unfortunately, the resistance temperature coefficient is relatively large (approximately 0.4%/°C), so systems with a wide temperature range may need to compensate for this effect. Additionally, self heating due to load currents introduces a nonlinearity error. Care must be taken not to exceed the maximum power dissipation of the copper trace.

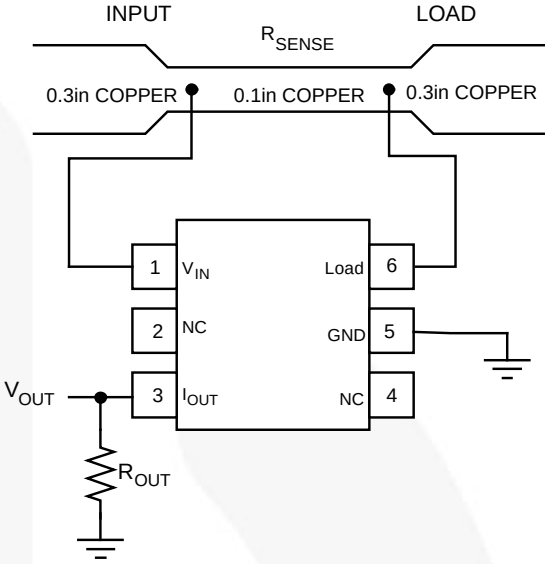

Figure 14. Using PCB Trace for R_{SENSE}

Selecting R_{OUT}

R_{OUT} can be chosen to obtain the output voltage range required for the particular downstream application. For example, if the output of the FAN4010 is intended to drive an analog-to-digital convertor (ADC), R_{OUT} should be chosen such that the expected full-scale output current produces an input voltage that matches the input range of the ADC. For instance, if expected loading current ranges from 0 to 1 A, an R_{SENSE} resistor of 1 Ω produces an output current that ranges from 0 to 10 mA. If the input voltage range of the ADC is 0 to 2 V, an R_{OUT} value of 200 Ω should be used. The input voltage and full-scale output current (I_{OUT_FS}) needs to be taken into account when setting up the output range. To ensure sufficient operating headroom, choose:

$$\left(R_{OUT} \cdot I_{OUT_{FS}}\right) \text{ such that } V_{IN} - V_{SENSE} - \left(R_{OUT} \cdot I_{OUT_{FS}}\right) > 1.6V \quad (4)$$

Output current accuracy for the recommended V_{SENSE} between 10 mV and 200 mV are typically better than 1%. As a result, the absolute output voltage accuracy is dependent on the precision of the output resistor.

Make sure the input impedance of the circuit connected to V_{OUT} is much higher than R_{OUT} to ensure accurate V_{OUT} values.

Since the FAN4010 provides a trans-impedance function, it is suitable for applications involving current rather than voltage sensing.

Physical Dimensions

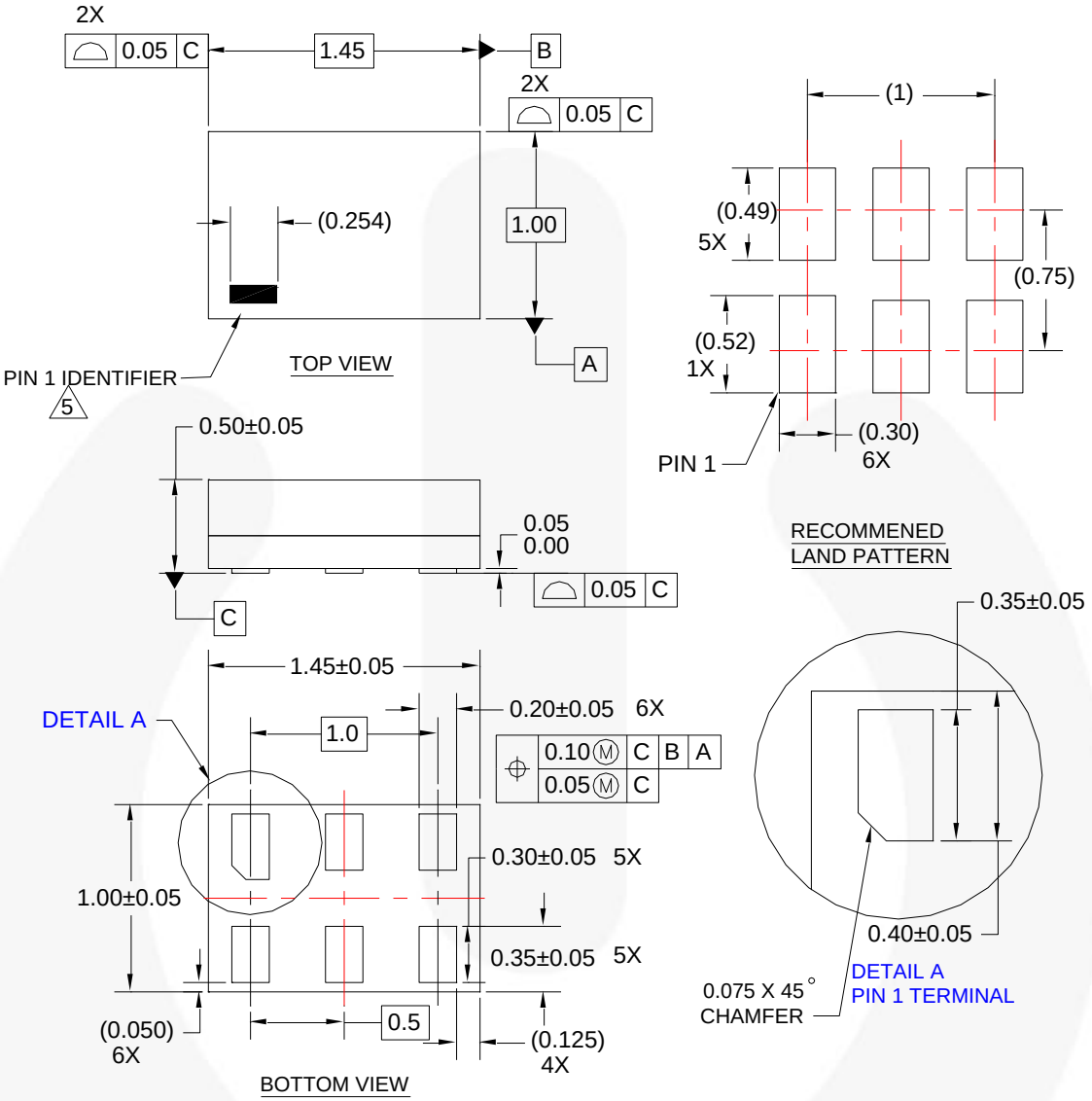

NOTES:

1. CONFORMS TO JEDEC STANDARD MO-252 VARIATION UAAD
2. DIMENSIONS ARE IN MILLIMETERS
3. DRAWING CONFORMS TO ASME Y14.5M-2009
4. LANDPATTERN RECOMMENDATION PER FSC
5. PIN ONE IDENTIFIER IS 2X LENGTH OF ANY OTHER LINE IN THE MARK CODE LAYOUT.
6. FILENAME AND REVISION: MAC06AREV6

Figure 15. 6-Lead MicroPak™ Molded Leadless Package (MLP)

FAIRCHILD

TRADEMARKS

The following includes registered and unregistered trademarks and service marks, owned by Fairchild Semiconductor and/or its global subsidiaries, and is not intended to be an exhaustive list of all such trademarks.

AccuPower™
Awinda®
AX-CAP®*
BitSiC™
Build it Now™
CorePLUS™
CorePOWER™
CROSSVOLT™
CTL™
Current Transfer Logic™
DEUXPEED®
Dual Cool™
EcoSPARK®
EfficientMax™
ESBC™
F®
Fairchild®
Fairchild Semiconductor®
FACT Quiet Series™
FACT®
FAST®
FastvCore™
FETBench™
FPS™
F-PFS™
FRFET®
Global Power Resource SM
GreenBridge™
Green FPS™
Green FPS™ e-Series™
G*max*™
GTO™
IntelliMAX™
ISOPLANAR™
Making Small Speakers Sound Louder and Better™
MegaBuck™
MICROCOUPLER™
MicroFET™
MicroPak™
MicroPak2™
MillerDrive™
MotionMax™
MotionGrid®
MTi®
MTx®
MVN®
mWSaver®
OptoHiT™
OPTOLOGIC®
OPTOPLANAR®
®
PowerTrench®
PowerXS™
Programmable Active Droop™
QFET®
QS™
Quiet Series™
RapidConfigure™
™
Saving our world, 1mW/W/kW at a time™
SignalWise™
SmartMax™
SMART START™
Solutions for Your Success™
SPM®
STEALTH™
SuperFET®
SuperSOT™-3
SuperSOT™-6
SuperSOT™-8
SupreMOS®
SyncFET™
Sync-Lock™
SYSTEM GENERAL®*
TinyBoost®
TinyBuck®
TinyCalc™
TinyLogic®
TINYOPTO™
TinyPower™
TinyPWM™
TinyWire™
TranSiC™
TriFault Detect™
TRUECURRENT®*
µSerDes™
µSerDes™
UHC®
Ultra FRFET™
UniFET™
VCX™
VisualMax™
VoltagePlus™
XS™
Xsens™
仙童™

* Trademarks of System General Corporation, used under license by Fairchild Semiconductor.

DISCLAIMER

FAIRCHILD SEMICONDUCTOR RESERVES THE RIGHT TO MAKE CHANGES WITHOUT FURTHER NOTICE TO ANY PRODUCTS HEREIN TO IMPROVE RELIABILITY, FUNCTION, OR DESIGN. TO OBTAIN THE LATEST, MOST UP-TO-DATE DATASHEET AND PRODUCT INFORMATION, VISIT OUR WEBSITE AT HTTP://WWW.FAIRCHILDSEMI.COM. FAIRCHILD DOES NOT ASSUME ANY LIABILITY ARISING OUT OF THE APPLICATION OR USE OF ANY PRODUCT OR CIRCUIT DESCRIBED HEREIN; NEITHER DOES IT CONVEY ANY LICENSE UNDER ITS PATENT RIGHTS, NOR THE RIGHTS OF OTHERS. THESE SPECIFICATIONS DO NOT EXPAND THE TERMS OF FAIRCHILD'S WORLDWIDE TERMS AND CONDITIONS, SPECIFICALLY THE WARRANTY THEREIN, WHICH COVERS THESE PRODUCTS.

LIFE SUPPORT POLICY

FAIRCHILD'S PRODUCTS ARE NOT AUTHORIZED FOR USE AS CRITICAL COMPONENTS IN LIFE SUPPORT DEVICES OR SYSTEMS WITHOUT THE EXPRESS WRITTEN APPROVAL OF FAIRCHILD SEMICONDUCTOR CORPORATION.

As used herein:

1. Life support devices or systems are devices or systems which, (a) are intended for surgical implant into the body or (b) support or sustain life, and (c) whose failure to perform when properly used in accordance with instructions for use provided in the labeling, can be reasonably expected to result in a significant injury of the user.
2. A critical component in any component of a life support, device, or system whose failure to perform can be reasonably expected to cause the failure of the life support device or system, or to affect its safety or effectiveness.

ANTI-COUNTERFEITING POLICY

Fairchild Semiconductor Corporation's Anti-Counterfeiting Policy. Fairchild's Anti-Counterfeiting Policy is also stated on our external website, www.fairchildsemi.com, under Sales Support.

Counterfeiting of semiconductor parts is a growing problem in the industry. All manufacturers of semiconductor products are experiencing counterfeiting of their parts. Customers who inadvertently purchase counterfeit parts experience many problems such as loss of brand reputation, substandard performance, failed applications, and increased cost of production and manufacturing delays. Fairchild is taking strong measures to protect ourselves and our customers from the proliferation of counterfeit parts. Fairchild strongly encourages customers to purchase Fairchild parts either directly from Fairchild or from Authorized Fairchild Distributors who are listed by country on our web page cited above. Products customers buy either from Fairchild directly or from Authorized Fairchild Distributors are genuine parts, have full traceability, meet Fairchild's quality standards for handling and storage and provide access to Fairchild's full range of up-to-date technical and product information. Fairchild and our Authorized Distributors will stand behind all warranties and will appropriately address any warranty issues that may arise. Fairchild will not provide any warranty coverage or other assistance for parts bought from Unauthorized Sources. Fairchild is committed to combat this global problem and encourage our customers to do their part in stopping this practice by buying direct or from authorized distributors.

PRODUCT STATUS DEFINITIONS

Definition of Terms

Datasheet Identification	Product Status	Definition
Advance Information	Formative / In Design	Datasheet contains the design specifications for product development. Specifications may change in any manner without notice.
Preliminary	First Production	Datasheet contains preliminary data; supplementary data will be published at a later date. Fairchild Semiconductor reserves the right to make changes at any time without notice to improve design.
No Identification Needed	Full Production	Datasheet contains final specifications. Fairchild Semiconductor reserves the right to make changes at any time without notice to improve the design.
Obsolete	Not In Production	Datasheet contains specifications on a product that is discontinued by Fairchild Semiconductor. The datasheet is for reference information only.

Rev. I72

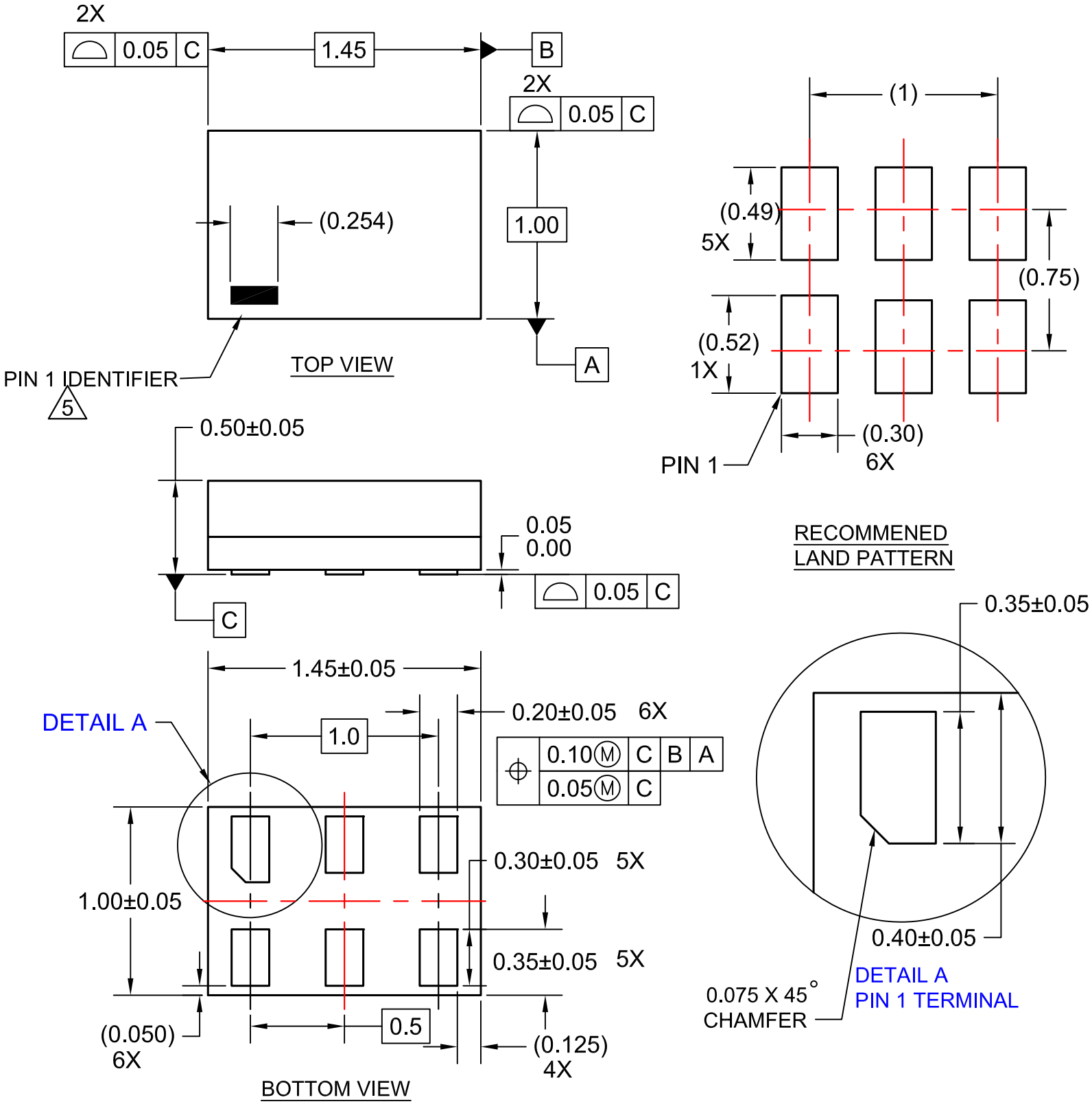

NOTES:

1. CONFORMS TO JEDEC STANDARD MO-252 VARIATION UAAD
2. DIMENSIONS ARE IN MILLIMETERS
3. DRAWING CONFORMS TO ASME Y14.5M-2009
4. LANDPATTERN RECOMMENDATION PER FSC
5. PIN ONE IDENTIFIER IS 2X LENGTH OF ANY OTHER LINE IN THE MARK CODE LAYOUT.
6. FILENAME AND REVISION: MAC06AREV6

ON Semiconductor and ON are trademarks of Semiconductor Components Industries, LLC dba ON Semiconductor or its subsidiaries in the United States and/or other countries. ON Semiconductor owns the rights to a number of patents, trademarks, copyrights, trade secrets, and other intellectual property. A listing of ON Semiconductor's product/patent coverage may be accessed at www.onsemi.com/site/pdf/Patent−Marking.pdf. ON Semiconductor reserves the right to make changes without further notice to any products herein. ON Semiconductor makes no warranty, representation or guarantee regarding the suitability of its products for any particular purpose, nor does ON Semiconductor assume any liability arising out of the application or use of any product or circuit, and specifically disclaims any and all liability, including without limitation special, consequential or incidental damages. Buyer is responsible for its products and applications using ON Semiconductor products, including compliance with all laws, regulations and safety requirements or standards, regardless of any support or applications information provided by ON Semiconductor. "Typical" parameters which may be provided in ON Semiconductor data sheets and/or specifications can and do vary in different applications and actual performance may vary over time. All operating parameters, including "Typicals" must be validated for each customer application by customer's technical experts. ON Semiconductor does not convey any license under its patent rights nor the rights of others. ON Semiconductor products are not designed, intended, or authorized for use as a critical component in life support systems or any FDA Class 3 medical devices or medical devices with a same or similar classification in a foreign jurisdiction or any devices intended for implantation in the human body. Should Buyer purchase or use ON Semiconductor products for any such unintended or unauthorized application, Buyer shall indemnify and hold ON Semiconductor and its officers, employees, subsidiaries, affiliates, and distributors harmless against all claims, costs, damages, and expenses, and reasonable attorney fees arising out of, directly or indirectly, any claim of personal injury or death associated with such unintended or unauthorized use, even if such claim alleges that ON Semiconductor was negligent regarding the design or manufacture of the part. ON Semiconductor is an Equal Opportunity/Affirmative Action Employer. This literature is subject to all applicable copyright laws and is not for resale in any manner.

PUBLICATION ORDERING INFORMATION

LITERATURE FULFILLMENT:
Literature Distribution Center for ON Semiconductor
19521 E. 32nd Pkwy, Aurora, Colorado 80011 USA
Phone: 303−675−2175 or 800−344−3860 Toll Free USA/Canada
Fax: 303−675−2176 or 800−344−3867 Toll Free USA/Canada
Email: orderlit@onsemi.com

N. American Technical Support: 800−282−9855 Toll Free USA/Canada
Europe, Middle East and Africa Technical Support:
Phone: 421 33 790 2910
Japan Customer Focus Center
Phone: 81−3−5817−1050

ON Semiconductor Website: **www.onsemi.com**

Order Literature: http://www.onsemi.com/orderlit

For additional information, please contact your local Sales Representative

Mouser Electronics

Authorized Distributor

Click to View Pricing, Inventory, Delivery & Lifecycle Information:

ON Semiconductor:

FAN4010IL6X_F113 FAN4010IL6X FAN4010IL6X-F113

Общество с ограниченной ответственностью «МосЧип» ИНН 7719860671 / КПП 771901001
Адрес: 105318, г.Москва, ул.Щербаковская д.3, офис 1107

Данный компонент на территории Российской Федерации

Вы можете приобрести в компании MosChip.

Для оперативного оформления запроса Вам необходимо перейти по данной ссылке:

http://moschip.ru/get-element

Вы можете разместить у нас заказ для любого Вашего проекта, будь то серийное производство или разработка единичного прибора.

В нашем ассортименте представлены ведущие мировые производители активных и пассивных электронных компонентов.

Нашей специализацией является поставка электронной компонентной базы двойного назначения, продукции таких производителей как XILINX, Intel (ex.ALTERA), Vicor, Microchip, Texas Instruments, Analog Devices, Mini-Circuits, Amphenol, Glenair.

Сотрудничество с глобальными дистрибьюторами электронных компонентов, предоставляет возможность заказывать и получать с международных складов практически любой перечень компонентов в оптимальные для Вас сроки.

На всех этапах разработки и производства наши партнеры могут получить квалифицированную поддержку опытных инженеров.

Система менеджмента качества компании отвечает требованиям в соответствии с ГОСТ Р ИСО 9001, ГОСТ РВ 0015-002 и ЭС РД 009

Офис по работе с юридическими лицами:

105318, г.Москва, ул.Щербаковская д.3, офис 1107, 1118, ДЦ «Щербаковский»

Телефон: +7 495 668-12-70 (многоканальный)

Факс: +7 495 668-12-70 (доб.304)

E-mail: info@moschip.ru

Skype отдела продаж:
moschip.ru
moschip.ru_4
moschip.ru_6
moschip.ru_9