GNR 22.5mm Series

- Current ratings of 10, 20 and 30 amps
- Output voltage ratings: 24-280 and 48-600 VAC
- Direct Bond Copper (DBC) Substrate
- LED input status indicator
- UL 508 Endurance Rating for Enhanced Reliability
- UL/CSA Approved, CE Compliant
- Built-in overvoltage protection
- DIN Rail or Panel Mount
- Zero voltage or Instantaneous turn-on output

PRODUCT SELECTION

Control Voltage	10A	20A	30A
4-32 VDC	GNR10DHZ	GNR20DHZ	GNR30DHZ
90-140 VAC	GNR10BHZ	GNR20BHZ	GNR30BHZ
180-280 VAC	GNR10AHZ	GNR20AHZ	GNR30AHZ

AVAILABLE OPTIONS

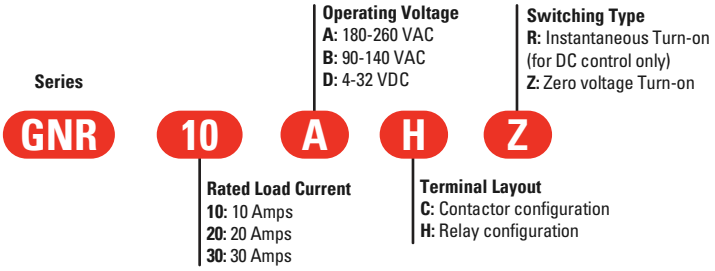

Required for valid part number
For options only and not required for valid part number

OUTPUT SPECIFICATIONS [1]

Description	GNR10	GNR20	GNR30
Operating Voltage (47-440Hz) [Vrms]	24-280	48-600	48-600
Transient Overvoltage [Vpk, t=1 min.]	600	1100	1100
Maximum Off-State Leakage Current @ Rated Voltage [mArms]	0.1	0.1	0.1
Static Off-State dv/dt (V/µsec, Ta=25°C) (2)	500	500	500
Maximum Load Current [Arms]	10	20	30
Minimum Load Current [mArms]	100	100	100
Maximum Surge Current (50/60 Hz, 1 cycle) [Apk]	190/200	286/300	716/750
1 Second Surge Current (Apk Ta=25°C) 50/60 Hz	65	85	150
Forward Voltage Drop (Vpk @ max, Ta=25°C)	1.5	1.35	1.35
Maximum I^2t for Fusing (50/60Hz, 1/2 cycle) [A^2 sec]	182/166	410/374	2562/2334
HP Ratings at 120V / FLC [Arms]	-	1.2/9.8	3/4 / 13.8
HP Ratings at 240V / FLC [Arms]	-	1/8	2/12
Min/Max stranded wire	16/8 AWG	16/8 AWG	16/8 AWG
Min/Max solid wire	16/10 AWG	16/10 AWG	16/10 AWG

Do not forget to visit us at: www.crydom.com
Copyright © 2018 Crydom Inc. Specifications subject to change without notice.
Sensata Technologies

INPUT SPECIFICATIONS (1)

Description	GNRxxDx	GNRxxBx	GNRxxAx
Control Voltage Range (3)	4.0-32 VDC	90-140 Vrms	180-280 Vrms
Minimum Turn-On Voltage	4.0 VDC	90 Vrms	180 Vrms
Must Turn-Off Voltage	1.0 VDC	10 Vrms	10 Vrms
Minimum Input Current (for on-state)	6 mA	5 mArms	6 mA
Maximum Input Current	10 mA	23 mArms	2 mA
Input Resistance	Current Regulated	Current Regulated	Current Regulated
Maximum Turn-Off Time [msec]	1/2 Cycle	20	20
Maximum Turn-On Time [msec] (4)	1/2 Cycle	30	30
Min/Max stranded/solid wire	24/16 AWG	24/16 AWG	24/16 AWG

GENERAL SPECIFICATIONS (1)

Description	Parameters
Ambient Operating Temperature Range (3)	-20 to 80°C
Ambient Storage Temperature Range	-40 to 100 °C
Dielectric Strength, Input to Output (50/60Hz)	4000 Vrms
Dielectric Strength, Input/Output to Ground (50/60Hz)	2500 Vrms
Maximum Capacitance, Input/Output	8 pF
Housing Material	UL 94V0 (self extinguishing)
Input Status Indicator	Green LED
Weight (typical)	7.94 oz (225g)

GENERAL NOTES

(1) All parameters at 25°C unless otherwise specified.
(2) Off-State dv/dt test method per EIA/NARM standard RS-443, paragraph 13.11.1
(3) For 180-280 VAC Control. Maximum Ambient operating temperatures is 60°C.
(4) Turn-on time for Instantaneous version (R suffix) is 0.1 msec (for DC control only).

For additional information or specific questions, contact Crydom Technical Support.

MECHANICAL SPECIFICATIONS (1)

Tolerances: ±0.02 in / 0.5 mm
All dimensions are in: inches [millimeters]

Contactor Configuration

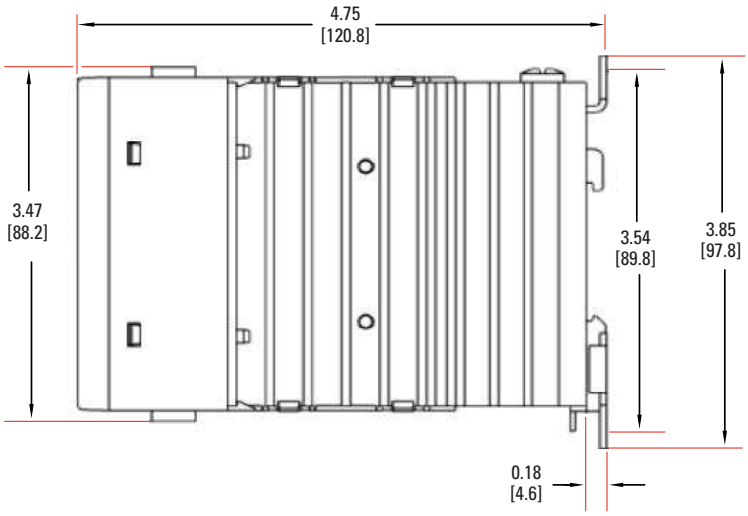

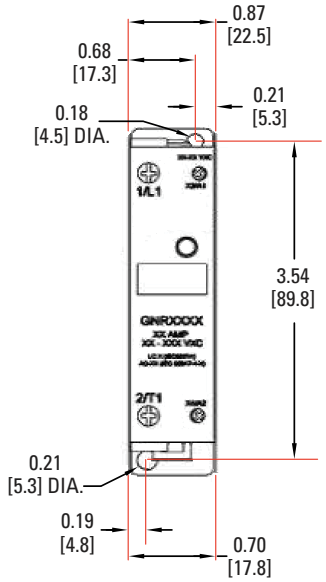

Copyright © 2018 Crydom Inc. Specifications subject to change without notice.

Relay Configuration

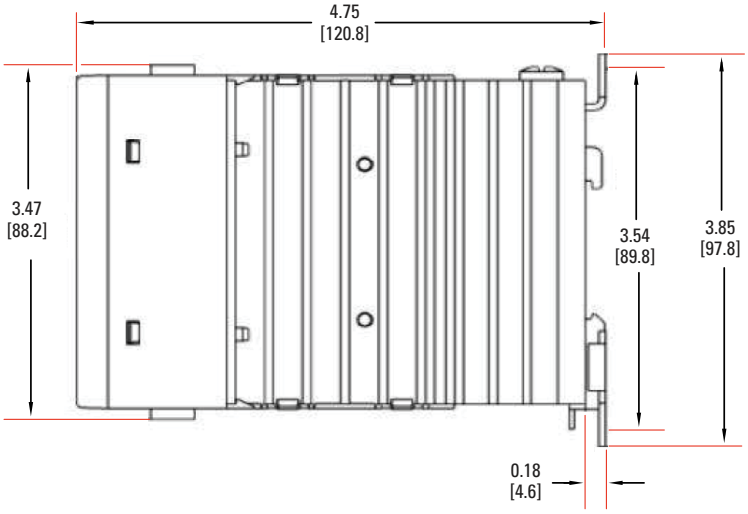

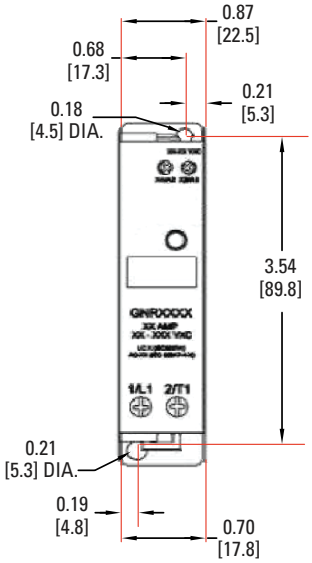

WIRING DIAGRAM

DC Input Equivalent Circuit

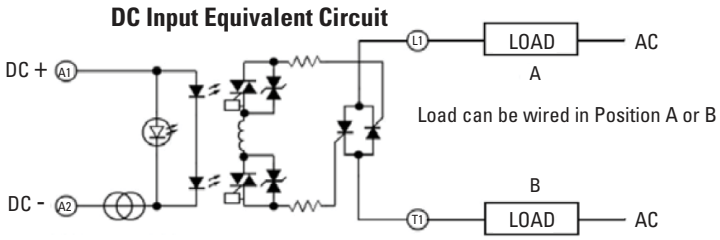

AC Input Equivalent Circuit

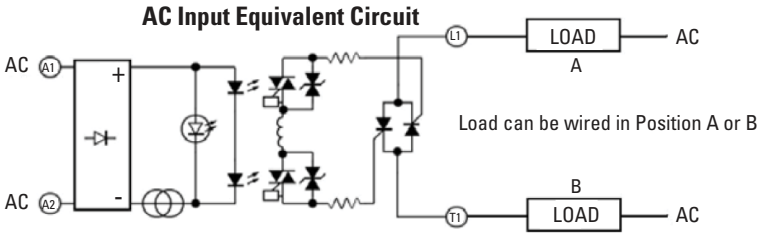

Copyright © 2018 Crydom Inc. Specifications subject to change without notice.

THERMAL DERATE INFORMATION

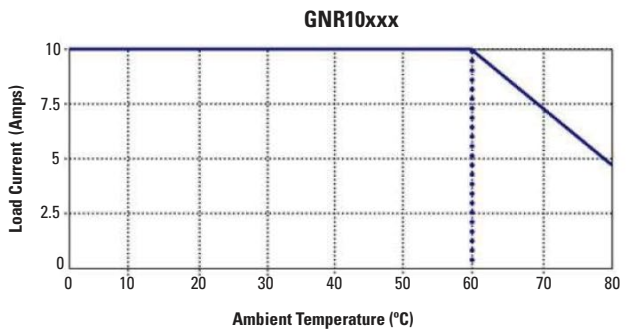

*GNR10A Series rated to 60°C max ambient

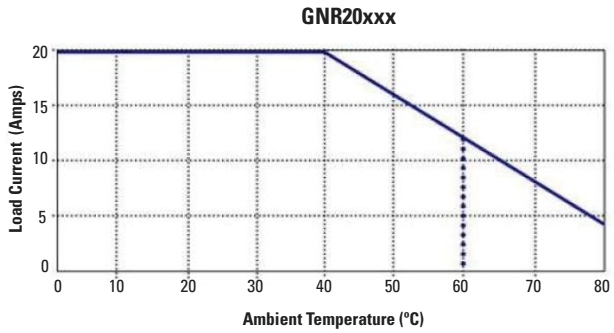

*GNR20A Series rated to 60°C max ambient

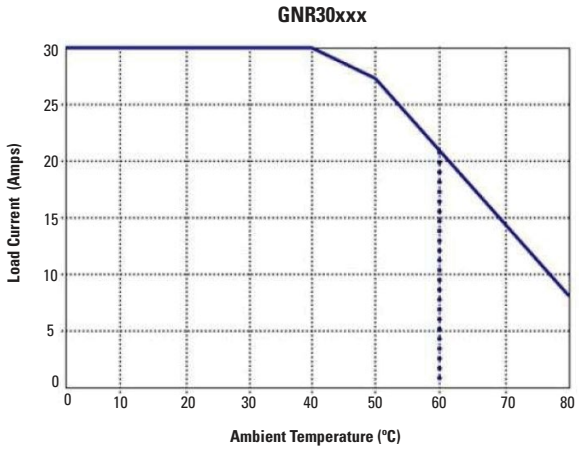

*GNR30A Series rated to 60°C max ambient

AGENCY APPROVALS

Designed in accordance with the requirements of IEC 62314

c UL us E79183 LR 38595 CE RoHS

EMC Compatibility

Designed in accordance with the requirements of IEC 62314

IEC 62314
IEC 60068-2-6 35mm/10-55Hz
IEC 60068-2-27 15G / 11ms
IEC 61000-4-2 Level 3 Electrostatic Discharge
IEC 61000-4-3 Level 3 Radiated Electromagnetic Noise
IEC 61000-4-4 Level 3 Immunity to Electrically Fast Transients
IEC 61000-4-5 Level 3 Immunity to Electrical Surges
IEC 61000-4-6 Level 3 Conducted Electromagnetic Noise
CISPR 11 Class A Conducted and Radiated Noise for Industrial Environments

Rev. 070618
ECN#20488

Copyright © 2018 Crydom Inc. Specifications subject to change without notice.

⚠ DANGER / PELIGRO / DANGER /GEFAHR / PERICOLO / 危险

HAZARD OF ELECTRIC SHOCK, EXPLOSION, OR ARC FLASH.

- Disconnect all power before installing or working with this equipment.
- Verify all connections and replace all covers before turning on power.

Failure to follow these instructions will result in death or serious injury.

RIESGO DE DESCARGA ELECTRICA O EXPLOSION.

- Desconectar todos los suministros de energia a este equipo antes de trabajar con este equipo.
- Verificar todas las conexiones y colocar todas las tapas antes de energizer el equipo.

El incumplimiento de estas instrucciones puede provocar la muerte o lesiones serias.

RISQUE DE DESCHARGE ELECTRIQUE OU EXPLOSION

- Eteindre toutes les sources d'énergie de cet appareil avant de travailler dessus de cet appareil
- Vérifier tous connections, et remettre tous couverts en olace avant de mettre sous

De non-suivi de ces instructions provoquera la mort ou des lésions sérieuses sérieuses.

GEFAHR EINES ELEKTRISCHE N SCHLAGES ODER EINER EXPLOSION.

- Stellen Sie jeglichen Strom ab, der dieses Gerät versorgt, bevor Sie an dem Gerät Arbeiten durchführen
- Vor dem Drehen auf Energie alle Anschlüsse überprüfen und alle Abdeckungen ersetzen.

Unterlassung dieser Anweisungen können zum Tode oder zu schweren Verletzungen führen.

RISCHIO DI SCOSSA ELETTRICA O DELL'ESPLOSIONE.

- Spenga tutta l'alimentazione che fornisce questa apparecchiatura prima di lavorare a questa apparecchiatura
- Verificare tutti i collegamenti e sostituire tutte le coperture prima dell'accensione

L'omissione di queste istruzioni provocherà la morte o lesioni serie

存在电击、爆炸或电弧闪烁危险

- 在操作此设备之前请先关闭电源。

若不遵守这些说明，可能会导致严重的人身伤害甚至死亡。

⚠ WARNING / AVERTISSEMENT / WARNUNG /ADVERTENCIA / AVVERTENZA / 警告

RISK OF MATERIAL DAMAGE AND HOT ENCLOSURE

- The product's side panels may be hot, allow the product to cool before touching.
- Follow proper mounting instructions including torque values.
- Do not allow liquids or foreign objects to enter this product.

Failure to follow these instructions can result in serious injury, or equipment damage.

RISQUE DE DOMMAGE MATERIEL ET DE SURCHAUFFE DU BOITIER

- Les panneaux latéraux du produit peuvent être chauds. Laisser le produit refroidir avant de le toucher.
- Respecter les consignes de montage, et notamment les couples de serrage.
- Ne pas laisser pénétrer de liquide ni de corps étrangers à l'intérieur du produit.

Le non-respect de cette directive peut entraîner, des lésions corporelles graves ou des dommages matériels.

GEFAHR VON MATERIALSCHÄDEN UND GEHÄUSEERHITZUNG

- Die Seitenwände können heiß sein. Lassen Sie das Produkt abkühlen, bevor Sie es berühren.
- Beachten Sie die Montageanweisungen,
- Führen Sie keine Flüssigkeiten oder Fremdkörper in das Produkt ein.

Die Nichtbeachtung dieser Anweisung kann Körperverletzung oder Materialschäden zur Folge haben.

RIESGO DE DAÑOS MATERIALES Y DE SOBRECALENTAMIENTO DE LA UNIDAD

- Los paneles laterales del producto pueden estar calientes. Esperar que el producto se enfríe antes de tocarlo.
- Respetar las instrucciones de montaje, y en particular los pares de apretado.
- No dejar que penetren líquidos o cuerpos extraños en el producto.

Si no se respetan estas precauciones pueden producirse graves lesiones, daños materiales.

RISCHIO DI DANNI MATERIALI E D'INVOLUCRO CALDO

- I pannelli laterali dell'apparecchio possono scottare; lasciar quindi raffreddare il prodotto prima di toccarlo.
- Seguire le istruzioni di montaggio corrette.
- Non far entrare liquidi o oggetti estranei in questo apparecchio.

La mancata osservanza di questa precauzione può causare gravi rischi per l'incolumità personale o danni alle apparecchiature.

材料损坏和高温外壳的危险性

- 产品的一侧面板可能很热，在其冷却前请不要触碰。
- 遵照正确的安装说明，包括扭矩值。
- 请勿让液体及其他异物进入本产品。

如不能正确执行这些操作说明，极有可能造成严重人体伤害或者设备的损坏。

Copyright © 2018 Crydom Inc. Specifications subject to change without notice.

ANNEX - ENVIROMENTAL INFORMATION

The environmental information disclosed in this annex including the EIP Pollution logo are in compliance with People's Republic of China Electronic Industry Standard SJ/T11364 – 2006, Marking for Control of Pollution Caused by Electronic Information Products.

Part Name	Toxic or hazardous Substance and Elements					
	Lead (Pb)	Mercury (Hg)	Cadmium (Cd)	Hexavalent Chromium (Cr (VI))	Polybrominated biphenyls (PBB)	Polybrominated diphenyl ethers (PBDE)
Semiconductor die	X	O	O	O	O	O
Solder	X	O	O	O	O	O

附件 – 环保信息

此附件所标示的包括电子信息产品污染图标的环保信息符合中华人民共和国电子行业标准 SJ/T11364 - 2006, 电子信息产品污染控制标识要求。

部件名称	有毒有害物质或元素					
	铅 (Pb)	汞 (Hg)	镉 (Cd)	六价铬 (Cr (VI))	多溴联苯 (PBB)	多溴二苯醚 (PBDE)
半导体芯片	X	O	O	O	O	O
焊接点	X	O	O	O	O	O

Copyright © 2018 Crydom Inc. Specifications subject to change without notice.

Общество с ограниченной ответственностью «МосЧип» ИНН 7719860671 / КПП 771901001
Адрес: 105318, г.Москва, ул.Щербаковская д.3, офис 1107

Данный компонент на территории Российской Федерации

Вы можете приобрести в компании MosChip.

Для оперативного оформления запроса Вам необходимо перейти по данной ссылке:

http://moschip.ru/get-element

Вы можете разместить у нас заказ для любого Вашего проекта, будь то серийное производство или разработка единичного прибора.

В нашем ассортименте представлены ведущие мировые производители активных и пассивных электронных компонентов.

Нашей специализацией является поставка электронной компонентной базы двойного назначения, продукции таких производителей как XILINX, Intel (ex.ALTERA), Vicor, Microchip, Texas Instruments, Analog Devices, Mini-Circuits, Amphenol, Glenair.

Сотрудничество с глобальными дистрибьюторами электронных компонентов, предоставляет возможность заказывать и получать с международных складов практически любой перечень компонентов в оптимальные для Вас сроки.

На всех этапах разработки и производства наши партнеры могут получить квалифицированную поддержку опытных инженеров.

Система менеджмента качества компании отвечает требованиям в соответствии с ГОСТ Р ИСО 9001, ГОСТ РВ 0015-002 и ЭС РД 009

Офис по работе с юридическими лицами:

105318, г.Москва, ул.Щербаковская д.3, офис 1107, 1118, ДЦ «Щербаковский»

Телефон: +7 495 668-12-70 (многоканальный)

Факс: +7 495 668-12-70 (доб.304)

E-mail: info@moschip.ru

Skype отдела продаж:
moschip.ru
moschip.ru_4
moschip.ru_6
moschip.ru_9