ANALOG DEVICES

Hittite
MICROWAVE PRODUCTS
FROM ANALOG DEVICES

Analog Devices Welcomes Hittite Microwave Corporation

NO CONTENT ON THE ATTACHED DOCUMENT HAS CHANGED

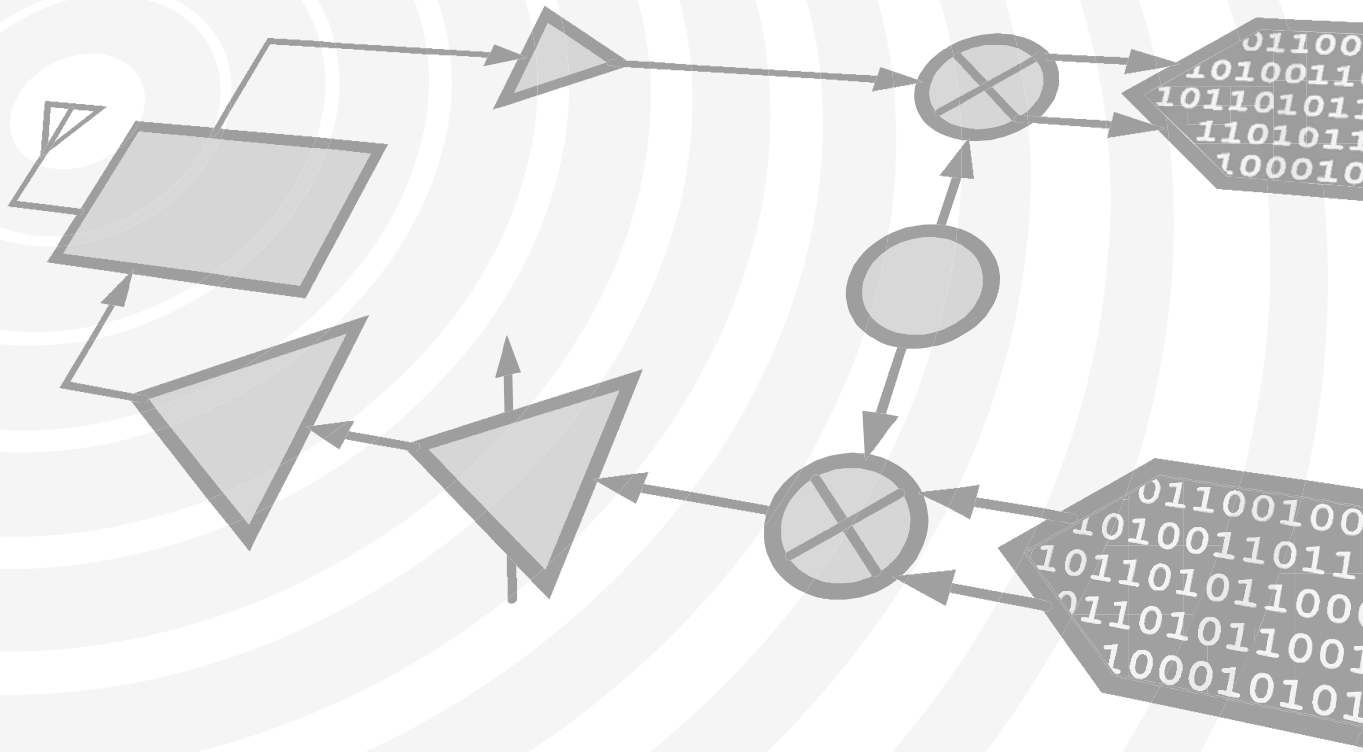

www.analog.com

www.hittite.com

THIS PAGE INTENTIONALLY LEFT BLANK

MICROWAVE CORPORATION v02.1008

HMC346C8

GaAs MMIC SMT VOLTAGE-VARIABLE ATTENUATOR, DC - 8 GHz

Typical Applications

The HMC346C8 is ideal for:

- Basestation Infrastructure
- Fiber Optics & Broadband Telecom
- Microwave Radio & VSAT
- Military Radios, Radar, & ECM
- Test Instrumentation

Features

Wide Bandwidth: DC - 8 GHz

Low Phase Shift vs. Attenuation

30 dB Attenuation Range

Surface Mount Ceramic Package

Functional Diagram

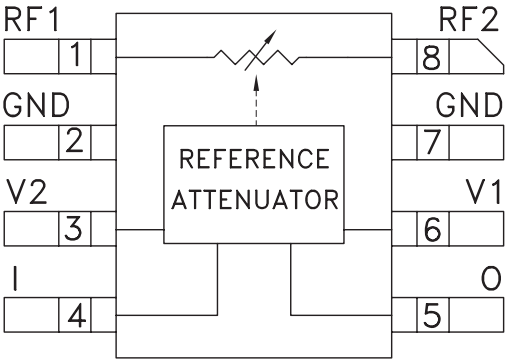

General Description

The HMC346C8 is an absorptive Voltage Variable Attenuator (VVA) in a non-hermetic surface-mount ceramic package operating from DC - 8 GHz. It features an on-chip reference attenuator for use with an external op-amp to provide simple single voltage attenuation control, 0 to -3V. The device is ideal in designs where an analog DC control signal must control RF signal levels over a 30 dB amplitude range. Applications include AGC circuits and temperature compensation of multiple gain stages in microwave radios and test instrumentation.

Electrical Specifications, T_A = +25° C, 50 ohm system

Parameter		Min	Typical	Max	Units
Insertion Loss	DC - 6 GHz DC - 8 GHz		1.9 2.1	2.9 3.1	dB dB
Attenuation Range	DC - 8 GHz		30		dB
Return Loss	DC - 8 GHz		10		dB
Switching Characteristics	tRISE, tFALL (10/90% RF) tON, tOFF (50% CTL to 10/90% RF)		2 8		ns ns
Input Power for 0.25 dB Compression (0.5 - 8 GHz)	Min. Atten. Atten. >2 dB		+8 -2		dBm dBm
Input Third Order Intercept (0.5 - 8 GHz) (Two-tone Input Power = -8 dBm Each Tone)	Min. Atten. Atten. >2 dB		+25 +10		dBm dBm

For price, delivery, and to place orders, please contact Hittite Microwave Corporation:
20 Alpha Road, Chelmsford, MA 01824 Phone: 978-250-3343 Fax: 978-250-3373
Order On-line at www.hittite.com

Insertion Loss vs. Temperature

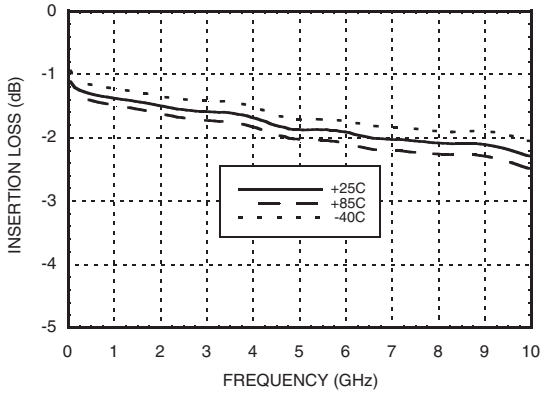

Relative Attenuation, Control Voltage Optimized for 4 GHz Operation

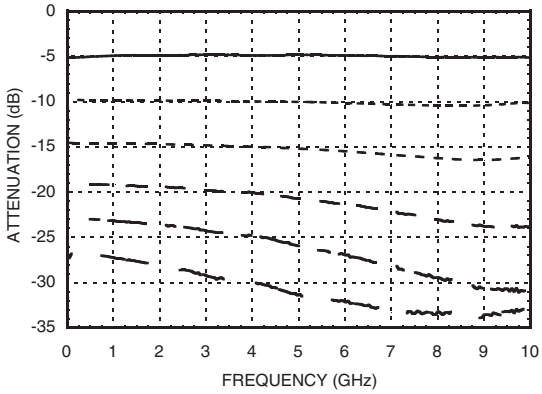

Return Loss vs. Attenuation

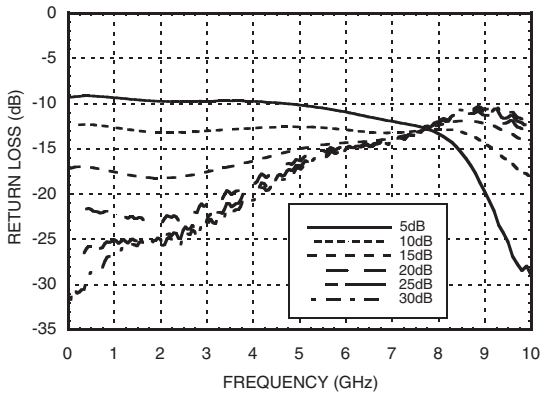

Relative Attenuation, Control Voltage Optimized for 8 GHz Operation

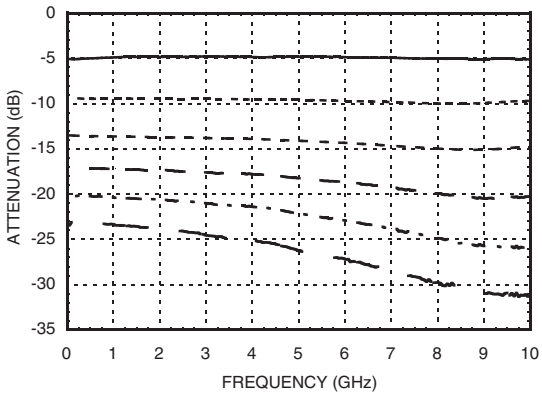

Relative Attenuation vs. Control Voltage @ 4 GHz

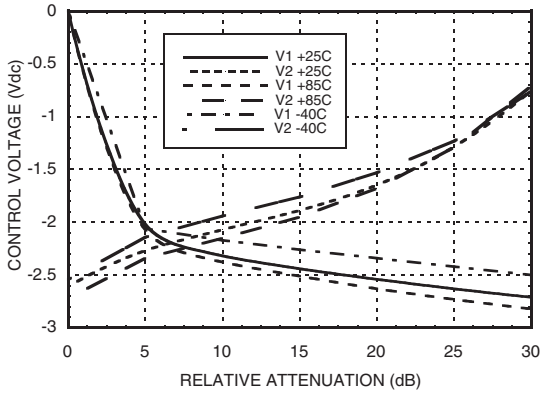

Relative Attenuation vs. Control Voltage @ 8 GHz

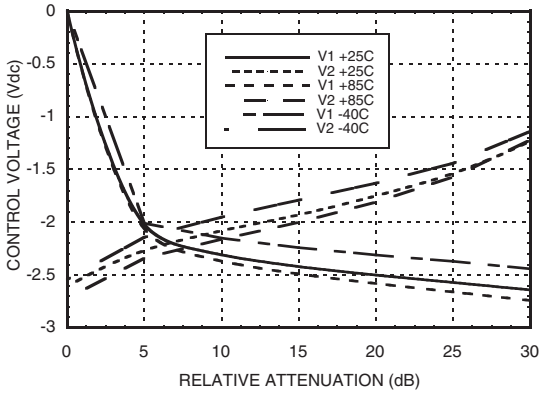

Relative Phase

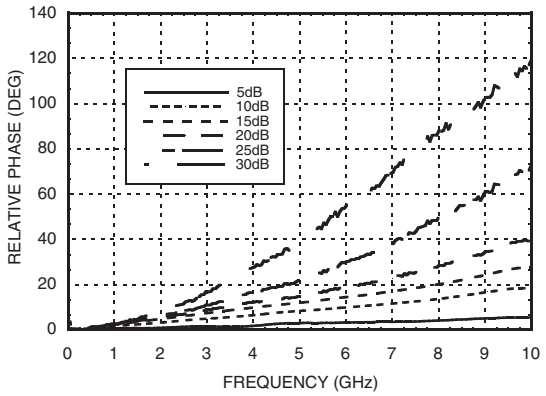

Input Third Order Intercept vs. Attenuation*

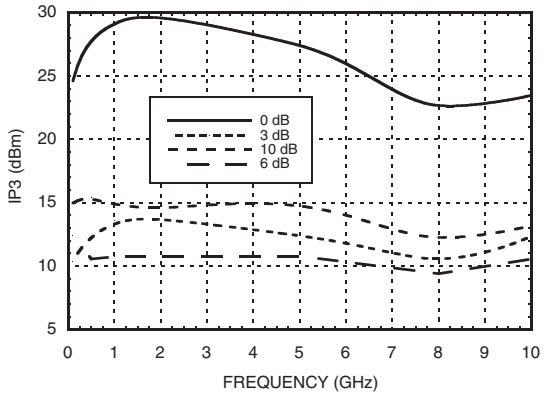

Input Second Order Intercept vs. Attenuation*

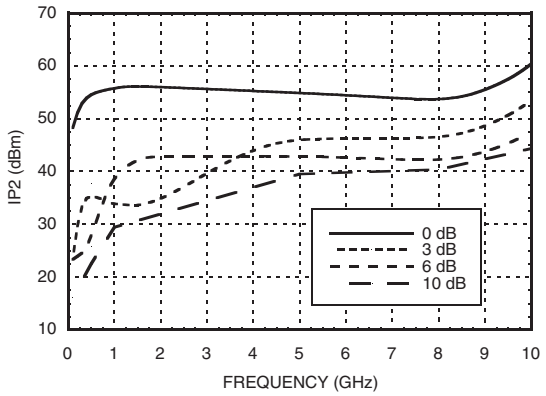

Second Harmonic vs. Attenuation

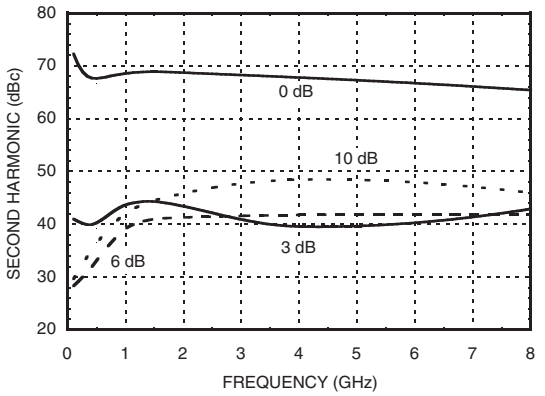

0.25 dB Compression vs. Attenuation

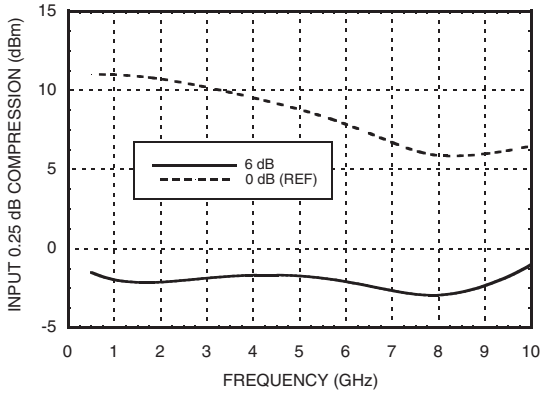

1 dB Compression vs. Attenuation

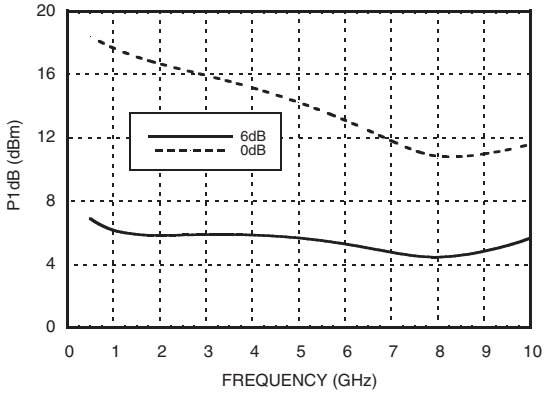

*Two-tone input power = -8 dBm each tone.

GaAs MMIC SMT VOLTAGE-VARIABLE ATTENUATOR, DC - 8 GHz

Absolute Maximum Ratings

RF Input Power	+18 dBm
Control Voltage Range	+1.0 to -5V
Channel Temperature	150 °C
Thermal Resistance	190 °C/W
Storage Temperature	-65 to +150 °C
Operating Temperature	-40 to +85 °C
ESD Sensitivity (HBM)	Class 1A

ELECTROSTATIC SENSITIVE DEVICE
OBSERVE HANDLING PRECAUTIONS

Outline Drawing

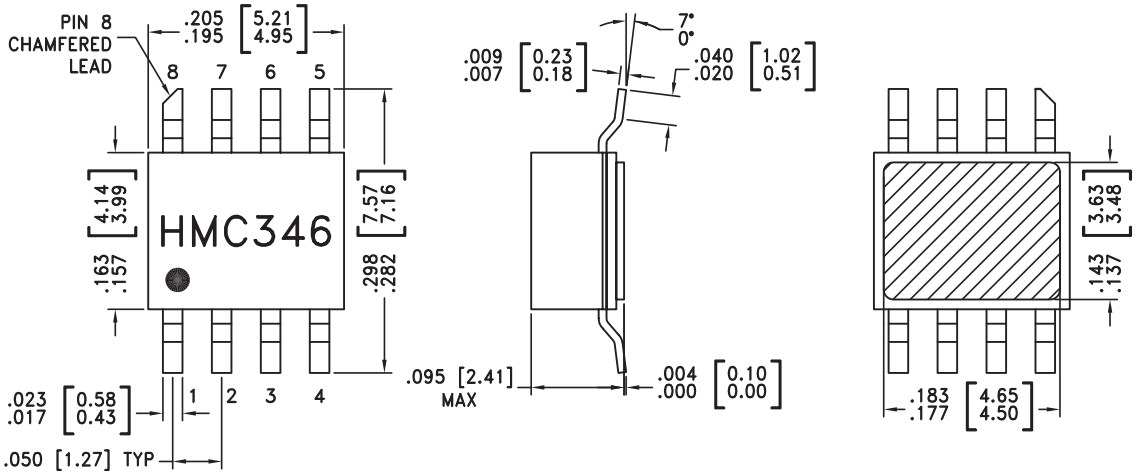

NOTES:
1. PACKAGE MATERIAL: ALUMINA LOADED BOROSILICATE GLASS.
2. LEAD, BASE, COVER MATERIAL: KOVAR™ (#7052 CORNING).
3. PLATING: ELECTROLYTIC GOLD 50 MICROINCHES MIN., OVER ELECTROLYTIC NICKEL 50 MICROINCHES MIN.
4. DIMENSIONS ARE IN INCHES [MILLIMETERS].
5. TOLERANCES: ±.005 [0.13] UNLESS OTHERWISE SPECIFIED.
6. ALL GROUND LEADS AND GROUND PADDLE MUST BE SOLDERED TO PCB RF GROUND.

Pin Descriptions

Pin Number	Function	Description	Interface Schematic
1, 8	RF1, RF2	This pin is DC coupled and matched to 50 Ohms. Blocking capacitors are required if RF line potential is not equal to 0V.	
2, 7	GND	This pin must be DC grounded.	GND
3, 6	V2, V1	Control Input (Master).	500
4	I	Control Input (Slave).	500
5	O	This pin must have an external 500 Ohm resistor to ground.	

Single-Line Control Driver

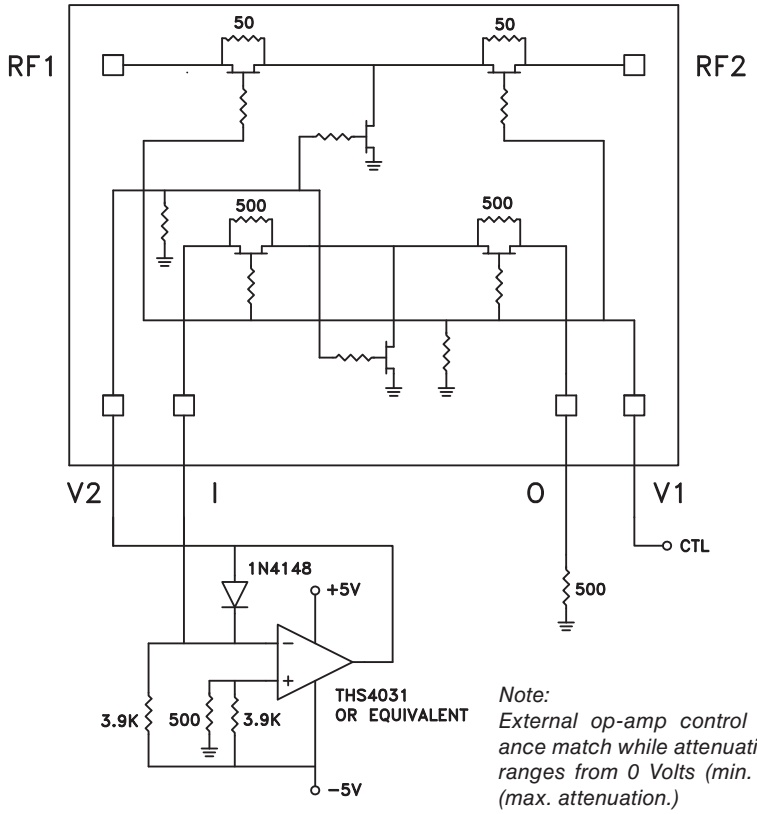

Note:
External op-amp control circuit maintains impedance match while attenuation is varied. Input control ranges from 0 Volts (min. attenuation) to -2.5 Volts (max. attenuation.)

Evaluation PCB

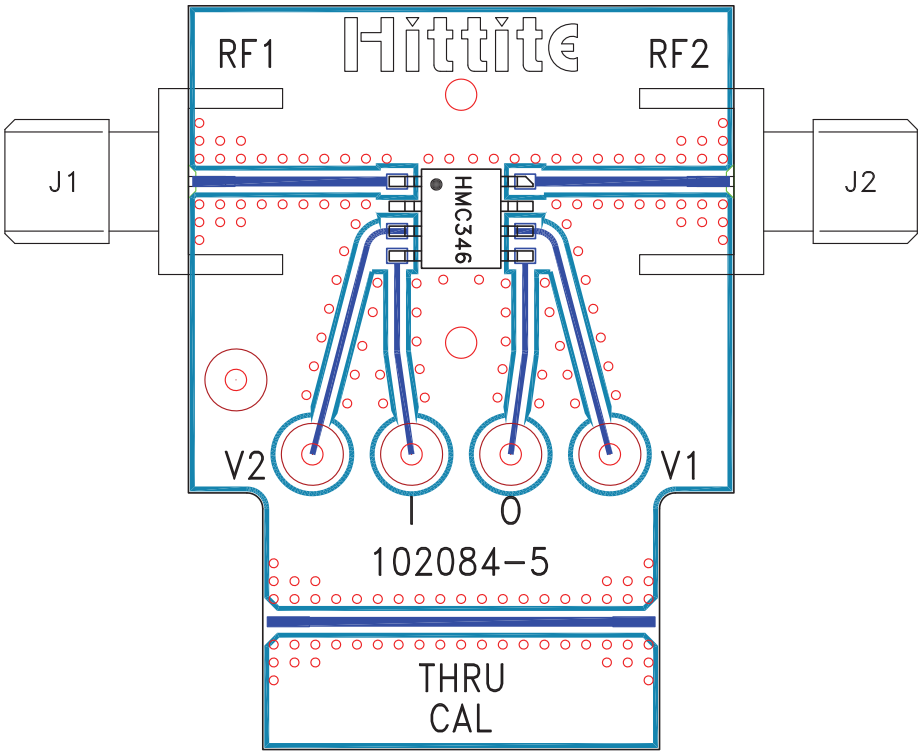

List of Materials for Evaluation PCB 109023 [1]

Item	Description
J1 - J2	PCB Mount SMA RF Connector
J3 - J7	DC PIN
U1	HMC346C8
PCB [2]	Eval Board 102084-5

[1] Reference this number when ordering complete evaluation PCB

[2]Circuit Board Material: Rogers 4350

The circuit board used in the final application should be generated with proper RF circuit design techniques. Signal lines at the RF ports should be 50 ohm impedance and the package ground leads and package bottom should be connected directly to the PCB RF ground plane, similar to that shown above. The evaluation circuit board shown above is available from Hittite Microwave Corporation upon request.

Общество с ограниченной ответственностью «МосЧип» ИНН 7719860671 / КПП 771901001
Адрес: 105318, г.Москва, ул.Щербаковская д.3, офис 1107

Данный компонент на территории Российской Федерации

Вы можете приобрести в компании MosChip.

Для оперативного оформления запроса Вам необходимо перейти по данной ссылке:

http://moschip.ru/get-element

Вы можете разместить у нас заказ для любого Вашего проекта, будь то серийное производство или разработка единичного прибора.

В нашем ассортименте представлены ведущие мировые производители активных и пассивных электронных компонентов.

Нашей специализацией является поставка электронной компонентной базы двойного назначения, продукции таких производителей как XILINX, Intel (ex.ALTERA), Vicor, Microchip, Texas Instruments, Analog Devices, Mini-Circuits, Amphenol, Glenair.

Сотрудничество с глобальными дистрибьюторами электронных компонентов, предоставляет возможность заказывать и получать с международных складов практически любой перечень компонентов в оптимальные для Вас сроки.

На всех этапах разработки и производства наши партнеры могут получить квалифицированную поддержку опытных инженеров.

Система менеджмента качества компании отвечает требованиям в соответствии с ГОСТ Р ИСО 9001, ГОСТ РВ 0015-002 и ЭС РД 009

Офис по работе с юридическими лицами:

105318, г.Москва, ул.Щербаковская д.3, офис 1107, 1118, ДЦ «Щербаковский»

Телефон: +7 495 668-12-70 (многоканальный)

Факс: +7 495 668-12-70 (доб.304)

E-mail: info@moschip.ru

Skype отдела продаж:
moschip.ru
moschip.ru_4
moschip.ru_6
moschip.ru_9