MAX3222E/MAX3232E/MAX3237E/ MAX3241E/MAX3246E

±15kV ESD-Protected, Down to 10nA, 3.0V to 5.5V, Up to 1Mbps, True RS-232 Transceivers

General Description

The MAX3222E/MAX3232E/MAX3237E/MAX3241E/MAX3246E +3.0V-powered EIA/TIA-232 and V.28/V.24 communications interface devices feature low power consumption, high data-rate capabilities, and enhanced electrostatic-discharge (ESD) protection. The enhanced ESD structure protects all transmitter outputs and receiver inputs to ±15kV using IEC 1000-4-2 Air-Gap Discharge, ±8kV using IEC 1000-4-2 Contact Discharge (±9kV for MAX3246E), and ±15kV using the Human Body Model. The logic and receiver I/O pins of the MAX3237E are protected to the above standards, while the transmitter output pins are protected to ±15kV using the Human Body Model.

A proprietary low-dropout transmitter output stage delivers true RS-232 performance from a +3.0V to +5.5V power supply, using an internal dual charge pump. The charge pump requires only four small 0.1µF capacitors for operation from a +3.3V supply. Each device guarantees operation at data rates of 250kbps while maintaining RS-232 output levels. The MAX3237E guarantees operation at 250kbps in the normal operating mode and 1Mbps in the MegaBaud™ operating mode, while maintaining RS-232-compliant output levels.

The MAX3222E/MAX3232E have two receivers and two transmitters. The MAX3222E features a 1µA shutdown mode that reduces power consumption in battery-powered portable systems. The MAX3222E receivers remain active in shutdown mode, allowing monitoring of external devices while consuming only 1µA of supply current. The MAX3222E and MAX3232E are pin, package, and functionally compatible with the industry-standard MAX242 and MAX232, respectively.

The MAX3241E/MAX3246E are complete serial ports (three drivers/five receivers) designed for notebook and subnotebook computers. The MAX3237E (five drivers/three receivers) is ideal for peripheral applications that require fast data transfer. These devices feature a shutdown mode in which all receivers remain active, while consuming only 1µA (MAX3241E/MAX3246E) or 10nA (MAX3237E).

The MAX3222E, MAX3232E, and MAX3241E are available in space-saving SO, SSOP, TQFN and TSSOP packages. The MAX3237E is offered in an SSOP package. The MAX3246E is offered in the ultra-small 6 x 6 UCSP™ package.

Next-Generation Device Features

- **For Space-Constrained Applications**
  MAX3228E/MAX3229E: ±15kV ESD-Protected, +2.5V to +5.5V, RS-232 Transceivers in UCSP
- **For Low-Voltage or Data Cable Applications**
  MAX3380E/MAX3381E: +2.35V to +5.5V, 1µA, 2Tx/2Rx, RS-232 Transceivers with ±15kV ESD-Protected I/O and Logic Pins

Applications

Battery-Powered Equipment

Cell Phones Smart Phones

Cell-Phone Data Cables

Notebook, Subnotebook, and Palmtop Computers

Printers

xDSL Modems

Ordering Information

PART	TEMP RANGE	PIN-PACKAGE
MAX3222ECTP+	0°C to +70°C	20 TQFN-EP** (5mm x 5mm)
MAX3222ECUP+	0°C to +70°C	20 TSSOP
MAX3222ECAP+	0°C to +70°C	20 SSOP
MAX3222ECWN+	0°C to +70°C	18 Wide SO
MAX3222ECPN+	0°C to +70°C	18 Plastic DIP
MAX3222EC/D+	0°C to +70°C	Dice*
MAX3222EETP+	-40°C to +85°C	20 TQFN-EP** (5mm x 5mm)
MAX3222EEUP/V+	-40°C to +85°C	20 TSSOP
MAX3222EEUP+	-40°C to +85°C	20 TSSOP
MAX3222EEAP+	-40°C to +85°C	20 SSOP
MAX3222EEWN+	-40°C to +85°C	18 Wide SO
MAX3222EEPN+	-40°C to +85°C	18 Plastic DIP
MAX3232ECAE+	0°C to +70°C	16 SSOP
MAX3232ECWE+	0°C to +70°C	16 Wide SO
MAX3232ECPE+	0°C to +70°C	16 Plastic DIP

+Denotes a lead(Pb)-free/RoHS-compliant package.
**Dice are tested at T_A = +25°C, DC parameters only.*
***EP = Exposed pad.*
/V denotes an automotive qualified part.

Ordering Information continued at end of data sheet.

MegaBaud and UCSP are trademarks of Maxim Integrated Products, Inc.

Pin Configurations, Selector Guide, and Typical Operating Circuits appear at end of data sheet.

For pricing, delivery, and ordering information, please contact Maxim Direct at 1-888-629-4642, or visit Maxim's website at www.maximintegrated.com.

19-1298; Rev 12; 12/10

ABSOLUTE MAXIMUM RATINGS

V_{CC} to GND .....-0.3V to +6V
V+ to GND (Note 1) .....-0.3V to +7V
V- to GND (Note 1) .....+0.3V to -7V
V+ + |V-| (Note 1).....+13V
Input Voltages
T_IN, $\overline{EN}$, $\overline{SHDN}$, MBAUD to GND .....-0.3V to +6V
R_IN to GND .....±25V
Output Voltages
T_OUT to GND.....±13.2V
R_OUT, R_OUTB (MAX3237E/MAX3241E)...-0.3V to (V_{CC} + 0.3V)
Short-Circuit Duration, T_OUT to GND.....Continuous
Continuous Power Dissipation (T_A = +70°C)
16-Pin SSOP (derate 7.14mW/°C above +70°C) 571mW
16-Pin TSSOP (derate 9.4mW/°C above +70°C) 754.7mW
16-Pin TQFN (derate 20.8mW/°C above +70°C) 1666.7mW
16-Pin Wide SO (derate 9.52mW/°C above +70°C) 762mW
18-Pin Wide SO (derate 9.52mW/°C above +70°C) 762mW
18-Pin PDIP (derate 11.11mW/°C above +70°C).....889mW
20-Pin TQFN (derate 21.3mW/°C above +70°C) 1702mW
20-Pin TSSOP (derate 10.9mW/°C above +70°C) 879mW
20-Pin SSOP (derate 8.00mW/°C above +70°C) 640mW
28-Pin SSOP (derate 9.52mW/°C above +70°C) 762mW
28-Pin Wide SO (derate 12.50mW/°C above +70°C).....1W
28-Pin TSSOP (derate 12.8mW/°C above +70°C) 1026mW
32-Pin TQFN (derate 33.3mW/°C above +70°C).....2666mW
6 x 6 UCSP (derate 12.6mW/°C above +70°C).....1010mW
Operating Temperature Ranges
MAX32_ _EC_ _ .....0°C to +70°C
MAX32_ _EE_ _.....-40°C to +85°C
Storage Temperature Range .....-65°C to +150°C
Lead Temperature (soldering, 10s) .....+300°C
Soldering Temperature (reflow) .....+260°C
Bump Reflow Temperature (Note 2)
Infrared, 15s.....+200°C
Vapor Phase, 20s.....+215°C

Note 1: V+ and V- can have maximum magnitudes of 7V, but their absolute difference cannot exceed 13V.

Note 2: This device is constructed using a unique set of packaging techniques that impose a limit on the thermal profile the device can be exposed to during board-level solder attach and rework. This limit permits only the use of the solder profiles recommended in the industry-standard specification, JEDEC 020A, paragraph 7.6, Table 3 for IR/VPR and convection reflow. Preheating is required. Hand or wave soldering is not allowed.

Stresses beyond those listed under "Absolute Maximum Ratings" may cause permanent damage to the device. These are stress ratings only, and functional operation of the device at these or any other conditions beyond those indicated in the operational sections of the specifications is not implied. Exposure to absolute maximum rating conditions for extended periods may affect device reliability.

ELECTRICAL CHARACTERISTICS

(V_{CC} = +3V to +5.5V, C1–C4 = 0.1µF, T_A = T_{MIN} to T_{MAX}, unless otherwise noted. Typical values are at T_A = +25°C.) (Notes 3, 4)

PARAMETER	CONDITIONS		MIN	TYP	MAX	UNITS
DC CHARACTERISTICS (V_{CC} = +3.3V or +5V, T_A = +25°C)						
Supply Current	$\overline{SHDN}$ = V_{CC}, no load	MAX3222E, MAX3232E, MAX3241E, MAX3246E		0.3	1	mA
		MAX3237E		0.5	2.0	
Shutdown Supply Current	$\overline{SHDN}$ = GND			1	10	µA
	$\overline{SHDN}$ = R_IN = GND, T_IN = GND or V_{CC} (MAX3237E)			10	300	nA
LOGIC INPUTS						
Input Logic Low	T_IN, $\overline{EN}$, $\overline{SHDN}$, MBAUD				0.8	V
Input Logic High	T_IN, $\overline{EN}$, $\overline{SHDN}$, MBAUD	V_{CC} = +3.3V	2.0			V
		V_{CC} = +5.0V	2.4			
Transmitter Input Hysteresis				0.5		V
Input Leakage Current	T_IN, $\overline{EN}$, $\overline{SHDN}$	MAX3222E, MAX3232E, MAX3241E, MAX3246E		±0.01	±1	µA
	T_IN, $\overline{SHDN}$, MBAUD	MAX3237E (Note 5)		9	18	

ELECTRICAL CHARACTERISTICS (continued)

(V_{CC} = +3V to +5.5V, C1–C4 = 0.1µF, T_A = T_{MIN} to T_{MAX}, unless otherwise noted. Typical values are at T_A = +25°C.) (Notes 3, 4)

PARAMETER	CONDITIONS		MIN	TYP	MAX	UNITS
RECEIVER OUTPUTS						
Output Leakage Current	R_OUT (MAX3222E/MAX3237E/MAX3241E/ MAX3246E), $\overline{EN}$ = V_{CC}, receivers disabled			±0.05	±10	µA
Output-Voltage Low	I_{OUT} = 1.6mA (MAX3222E/MAX3232E/MAX3241E/ MAX3246E), I_{OUT} = 1.0mA (MAX3237E)				0.4	V
Output-Voltage High	I_{OUT} = -1.0mA		V_{CC} - 0.6	V_{CC} - 0.1		V
RECEIVER INPUTS						
Input Voltage Range			-25		+25	V
Input Threshold Low	T_A = +25°C	V_{CC} = +3.3V	0.6	1.1		V
		V_{CC} = +5.0V	0.8	1.5		
Input Threshold High	T_A = +25°C	V_{CC} = +3.3V		1.5	2.4	V
		V_{CC} = +5.0V		2.0	2.4	
Input Hysteresis				0.5		V
Input Resistance	T_A = +25°C		3	5	7	kΩ
TRANSMITTER OUTPUTS						
Output Voltage Swing	All transmitter outputs loaded with 3k! to ground (Note 6)		±5	±5.4		V
Output Resistance	V_{CC} = 0V, transmitter output = ±2V		300	50k		Ω
Output Short-Circuit Current					±60	mA
Output Leakage Current	V_{CC} = 0V or +3.0V to +5.5V, V_{OUT} = ±12V, transmitters disabled (MAX3222E/MAX3232E/MAX3241E/MAX3246E)				±25	µA
MOUSE DRIVABILITY (MAX3241E)						
Transmitter Output Voltage	T1IN = T2IN = GND, T3IN = V_{CC}, T3OUT loaded with 3kΩ to GND, T1OUT and T2OUT loaded with 2.5mA each		±5			V
ESD PROTECTION						
R_IN, T_OUT	Human Body Model			±15		kV
	IEC 1000-4-2 Air-Gap Discharge (except MAX3237E)			±15		
	IEC 1000-4-2 Contact Discharge (except MAX3237E)			±8		
	IEC 1000-4-2 Contact Discharge (MAX3246E only)			±9		
T_IN, R_IN, R_OUT, $\overline{EN}$, $\overline{SHDN}$, MBAUD	MAX3237E	Human Body Model		±15		kV
		IEC 1000-4-2 Air-Gap Discharge		±15		
		IEC 1000-4-2 Contact Discharge		±8		

TIMING CHARACTERISTICS—MAX3222E/MAX3232E/MAX3241E/MAX3246E

(V_{CC} = +3V to +5.5V, C1–C4 = 0.1µF, T_A = T_{MIN} to T_{MAX}, unless otherwise noted. Typical values are at T_A = +25°C.) (Notes 3, 4)

PARAMETER	SYMBOL	CONDITIONS		MIN	TYP	MAX	UNITS
Maximum Data Rate		R_L = 3kΩ, C_L = 1000pF, one transmitter switching	T_A = T_{MIN} to T_{MAX} (MAX3222E/MAX3232E/ MAX3241E) (Note 6)	250			kbps
			T_A = +25°C (MAX3246E)	250			
Receiver Propagation Delay	t_{PHL}	Receiver input to receiver output, C_L = 150pF			0.15		µs
	t_{PLH}				0.15		
Receiver Output Enable Time		Normal operation (except MAX3232E)			200		ns
Receiver Output Disable Time		Normal operation (except MAX3232E)			200		ns
Transmitter Skew	$\lvert t_{PHL} - t_{PLH} \rvert$	(Note 7)			100		ns
Receiver Skew	$\lvert t_{PHL} - t_{PLH} \rvert$				50		ns
Transition-Region Slew Rate		V_{CC} = +3.3V, T_A = +25°C, R_L = 3kΩ to 7kΩ, measured from +3.0V to -3.0V or -3.0V to +3.0V, one transmitter switching	C_L = 150pF to 1000pF	6		30	V/µs

TIMING CHARACTERISTICS—MAX3237E

(V_{CC} = +3V to +5.5V, C1–C4 = 0.1µF, T_A = T_{MIN} to T_{MAX}, unless otherwise noted. Typical values are at T_A = +25°C.) (Note 3)

PARAMETER	CONDITIONS			MIN	TYP	MAX	UNITS
Maximum Data Rate	R_L = 3kΩ, C_L = 1000pF, one transmitter switching, MBAUD = GND			250			kbps
	V_{CC} = +3.0V to +4.5V, R_L = 3kΩ, C_L = 250pF, one transmitter switching, MBAUD = V_{CC}			1000			
	V_{CC} = +4.5V to +5.5V, R_L = 3kΩ, C_L = 1000pF, one transmitter switching, MBAUD = V_{CC}			1000			
Receiver Propagation Delay	R_IN to R_OUT, C_L = 150pF		t_{PHL}		0.15		µs
			t_{PLH}		0.15		
Receiver Output Enable Time	Normal operation				2.6		µs
Receiver Output Disable Time	Normal operation				2.4		µs
Transmitter Skew (Note 7)	$\lvert t_{PHL} - t_{PLH} \rvert$, MBAUD = GND				100		ns
	$\lvert t_{PHL} - t_{PLH} \rvert$, MBAUD = V_{CC}						
Receiver Skew	$\lvert t_{PHL} - t_{PLH} \rvert$				50		ns
Transition-Region Slew Rate	V_{CC} = +3.3V, R_L = 3kΩ to 7kΩ, +3.0V to -3.0V or -3.0V to +3.0V, T_A = +25°C	C_L = 150pF to 1000pF	MBAUD = GND	6		30	V/µs
			MBAUD = V_{CC}	24		150	
		C_L = 150pF to 2500pF, MBAUD = GND		4		30	

Note 3: MAX3222E/MAX3232E/MAX3241E: C1–C4 = 0.1µF tested at +3.3V ±10%; C1 = 0.047µF, C2, C3, C4 = 0.33µF tested at +5.0V ±10%. MAX3237E: C1–C4 = 0.1µF tested at +3.3V ±5%, C1–C4 = 0.22µF tested at +3.3V ±10%; C1 = 0.047µF, C2, C3, C4 = 0.33µF tested at +5.0V ±10%. MAX3246E: C1-C4 = 0.22µF tested at +3.3V ±10%; C1 = 0.22µF, C2, C3, C4 = 0.54µF tested at +5.0V ±10%.

Note 4: MAX3246E devices are production tested at +25°C. All limits are guaranteed by design over the operating temperature range.

Note 5: The MAX3237E logic inputs have an active positive feedback resistor. The input current goes to zero when the inputs are at the supply rails.

Note 6: MAX3241EEUI is specified at T_A = +25°C.

Transmitter skew is measured at the transmitter zero crosspoints.

Typical Operating Characteristics

(V_{CC} = +3.3V, 250kbps data rate, 0.1µF capacitors, all transmitters loaded with 3kΩ and C_L, T_A = +25°C, unless otherwise noted.)

MAX3222E/MAX3232E TRANSMITTER OUTPUT VOLTAGE vs. LOAD CAPACITANCE

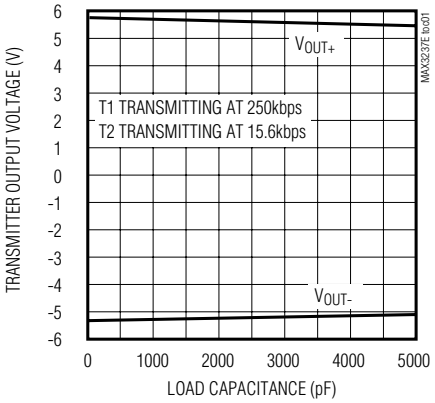

MAX3222E/MAX3232E SLEW RATE vs. LOAD CAPACITANCE

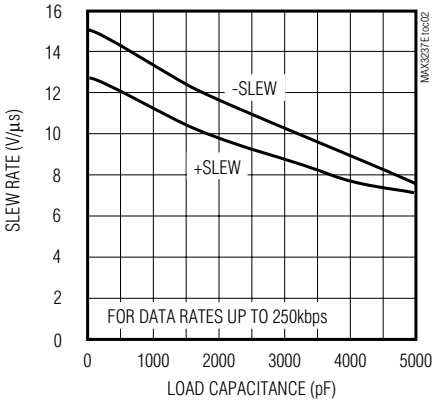

MAX3222E/MAX3232E OPERATING SUPPLY CURRENT vs. LOAD CAPACITANCE

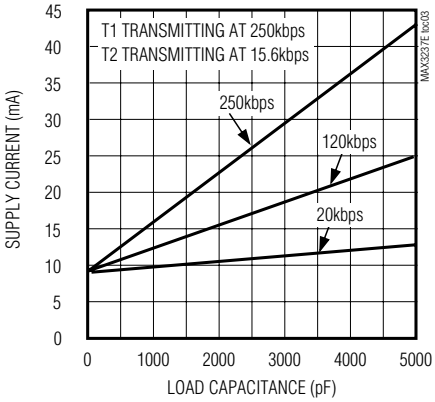

MAX3241E TRANSMITTER OUTPUT VOLTAGE vs. LOAD CAPACITANCE

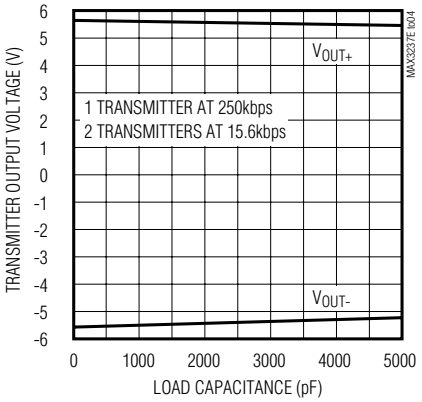

MAX3241E SLEW RATE vs. LOAD CAPACITANCE

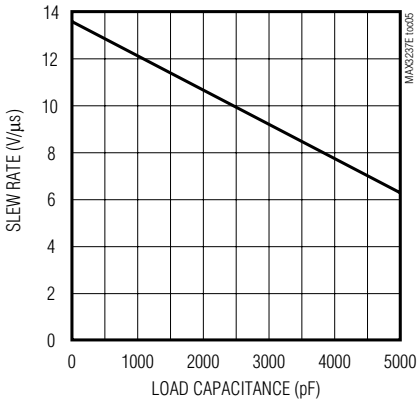

MAX3241E OPERATING SUPPLY CURRENT vs. LOAD CAPACITANCE

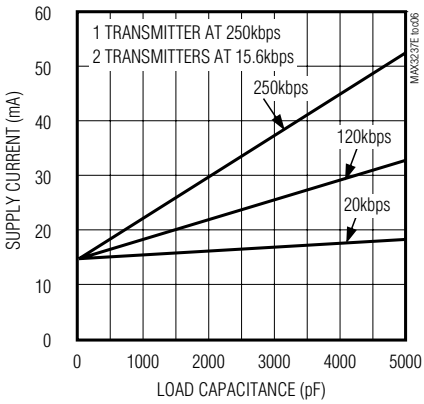

MAX3237E TRANSMITTER OUTPUT VOLTAGE vs. LOAD CAPACITANCE (MBAUD = GND)

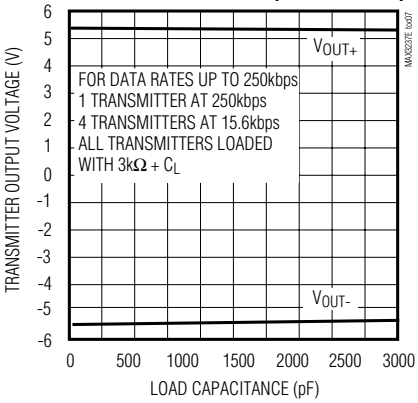

MAX3237E TRANSMITTER OUTPUT VOLTAGE vs. LOAD CAPACITANCE

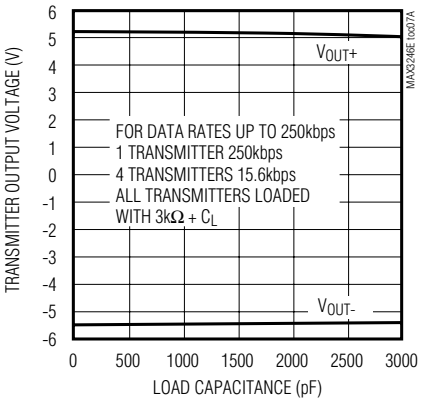

MAX3237E TRANSMITTER OUTPUT VOLTAGE vs. LOAD CAPACITANCE (MBAUD = V_{CC})

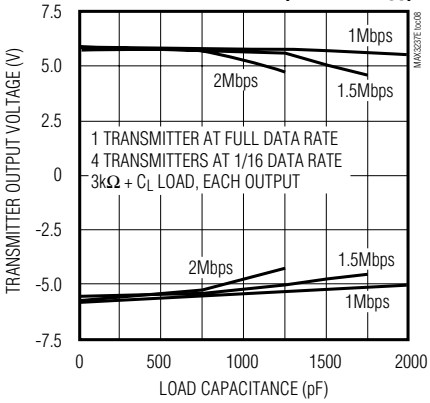

Typical Operating Characteristics (continued)

(V_{CC} = +3.3V, 250kbps data rate, 0.1µF capacitors, all transmitters loaded with 3kΩ and C_L, T_A = +25°C, unless otherwise noted.)

MAX3237E
SLEW RATE vs. LOAD CAPACITANCE (MBAUD = GND)

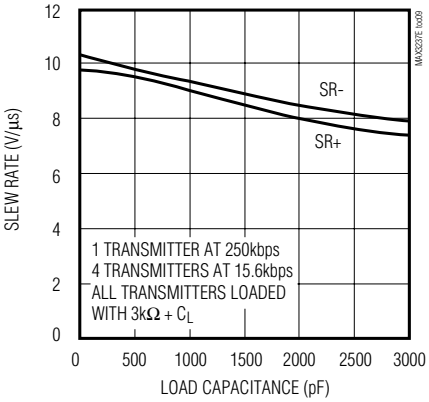

MAX3237E
SLEW RATE vs. LOAD CAPACITANCE (MBAUD = V_{CC})

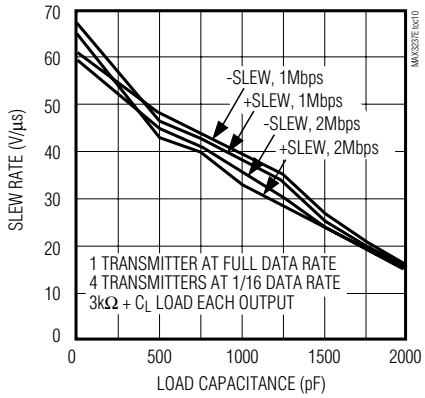

MAX3237E
SUPPLY CURRENT vs. LOAD CAPACITANCE WHEN TRANSMITTING DATA (MBAUD = GND)

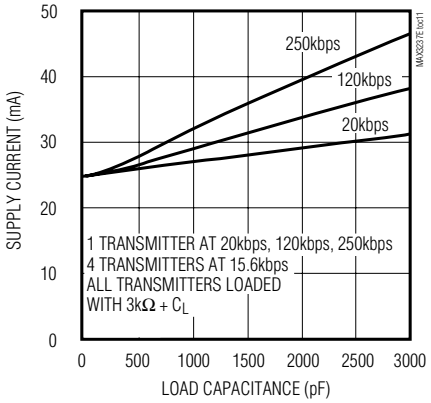

MAX3237E
TRANSMITTER SKEW vs. LOAD CAPACITANCE (MBAUD = V_{CC})

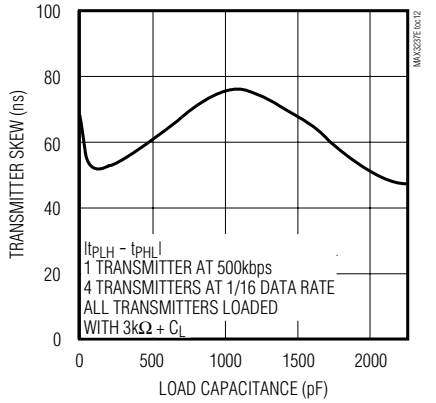

MAX3237E
TRANSMITTER OUTPUT VOLTAGE vs. SUPPLY VOLTAGE (MBAUD = GND)

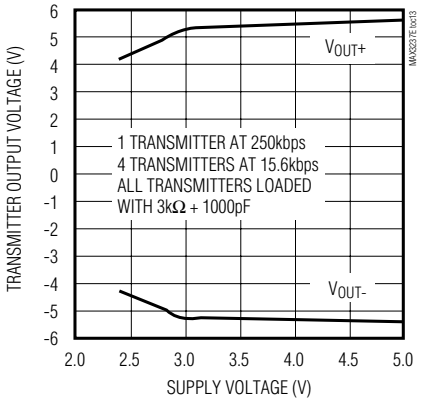

MAX3237E SUPPLY CURRENT vs. SUPPLY VOLTAGE (MBAUD = GND)

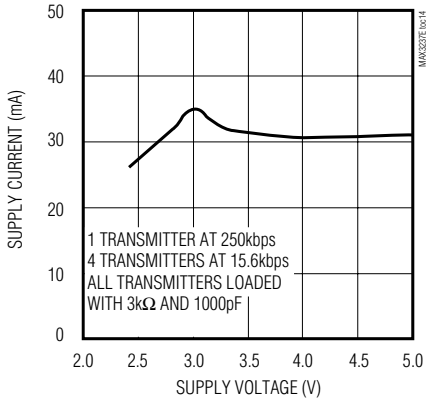

MAX3246E
TRANSMITTER OUTPUT VOLTAGE vs. LOAD CAPACITANCE

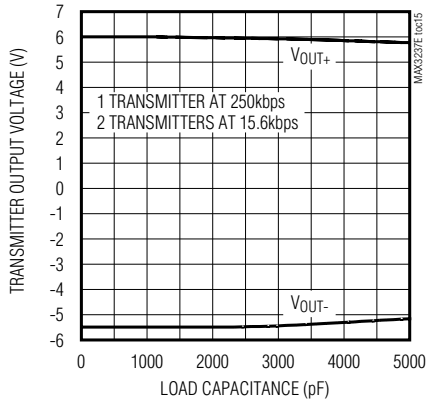

MAX3246E
SLEW RATE vs. LOAD CAPACITANCE

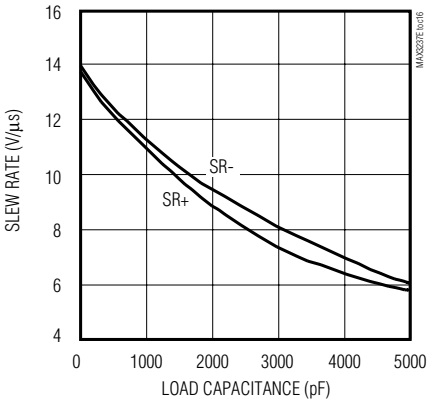

MAX3246E
OPERATING SUPPLY CURRENT vs. LOAD CAPACITANCE

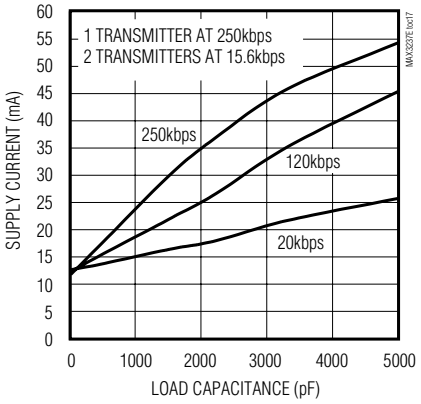

Pin Description

PIN										NAME	FUNCTION
MAX3222E			MAX3232E			MAX3237E	MAX3241E		MAX3246E		
TQFN	SO/ DIP	TSSOP/ SSOP	TQFN	SO/DIP/ SSOP/ 16-PIN TSSOP	20-PIN TSSOP		SSOP/ SO/ TSSOP	TQFN			
19	1	1	—	—	—	13*	23	22	B3	$\overline{EN}$	Receiver Enable. Active low.
1	2	2	16	1	2	28	28	28	F3	C1+	Positive Terminal of Voltage-Doubler Charge-Pump Capacitor
20	3	3	15	2	3	27	27	27	F1	V+	+5.5V Generated by the Charge Pump
2	4	4	1	3	4	25	24	23	F4	C1-	Negative Terminal of Voltage-Doubler Charge-Pump Capacitor
3	5	5	2	4	5	1	1	29	E1	C2+	Positive Terminal of Inverting Charge-Pump Capacitor
4	6	6	3	5	6	3	2	30	D1	C2-	Negative Terminal of Inverting Charge-Pump Capacitor
5	7	7	4	6	7	4	3	31	C1	V-	-5.5V Generated by the Charge Pump
6, 15	8, 15	8, 17	5, 12	7, 14	8, 17	5, 6, 7, 10, 12	9, 10, 11	6, 7, 8	F6, E6, D6	T_OUT	RS-232 Transmitter Outputs
7, 14	9, 14	9, 16	6, 11	8, 13	9, 16	8, 9, 11	4–8	1–5	A4, A5, A6, B6, C6	R_IN	RS-232 Receiver Inputs
8, 13	10, 13	10, 15	7, 10	9, 12	12, 15	18, 20, 21	15–19	13, 14, 15, 17, 18	C2, B1, A1, A2, A3	R_OUT	TTL/CMOS Receiver Outputs
10, 11	11, 12	12, 13	8, 9	10, 11	13, 14	17*, 19*, 22*, 23*, 24*	12, 13, 14	10, 11, 12	E3, E2, D2	T_IN	TTL/CMOS Transmitter Inputs

**These pins have an active positive feedback resistor internal to the MAX3237E, allowing unused inputs to be left unconnected.*

Pin Description (continued)

PIN										NAME	FUNCTION
MAX3222E			MAX3232E			MAX3237E	MAX3241E		MAX3246E		
TQFN	SO/ DIP	TSSOP/ SSOP	TQFN	SO/DIP/ SSOP/ 16-PIN TSSOP	20-PIN TSSOP		SSOP/ SO/ TSSOP	TQFN			
16	16	18	13	15	18	2	25	24	F5	GND	Ground
17	17	19	14	16	19	26	26	26	F2	V_{CC}	+3.0V to +5.5V Supply Voltage
18	18	20	—	—	—	14*	22	21	B2	$\overline{SHDN}$	Shutdown Control. Active low.
9, 12	—	11, 14	—	—	1, 10, 11, 20	—	—	9, 16, 25, 32	C3, D3, B4, C4, D4, E4, B5, C5, D5, E5	N.C.	No Connection. For MAX3246E, these locations are not populated with solder bumps.
—	—	—	—	—	—	15*	—	—	—	MBAUD	MegaBaud Control Input. Connect to GND for normal operation; connect to V_{CC} for 1Mbps transmission rates.
—	—	—	—	—	—	16	20, 21	19, 20	—	R_OUTB	Noninverting Complementary Receiver Outputs. Always active.
—	—	—	—	—	—	—	—	—	—	EP	Exposed Pad. Solder the exposed pad to the ground plane or leave unconnected (for TQFN only).

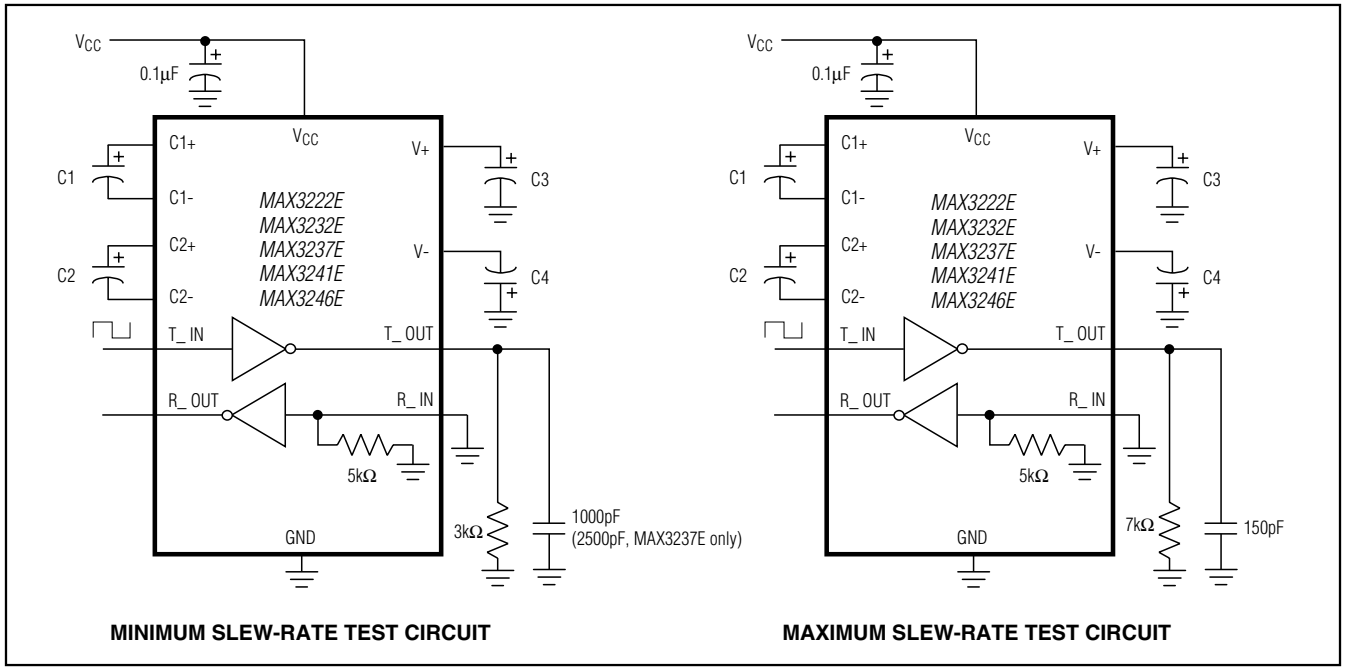

Figure 1. Slew-Rate Test Circuits

Detailed Description

Dual Charge-Pump Voltage Converter

The MAX3222E/MAX3232E/MAX3237E/MAX3241E/MAX3246E's internal power supply consists of a regulated dual charge pump that provides output voltages of +5.5V (doubling charge pump) and -5.5V (inverting charge pump) over the +3.0V to +5.5V V_{CC} range. The charge pump operates in discontinuous mode; if the output voltages are less than 5.5V, the charge pump is enabled, and if the output voltages exceed 5.5V, the charge pump is disabled. Each charge pump requires a flying capacitor (C1, C2) and a reservoir capacitor (C3, C4) to generate the V+ and V- supplies (Figure 1).

RS-232 Transmitters

The transmitters are inverting level translators that convert TTL/CMOS-logic levels to ±5V EIA/TIA-232-compliant levels.

The MAX3222E/MAX3232E/MAX3237E/MAX3241E/MAX3246E transmitters guarantee a 250kbps data rate with worst-case loads of 3kΩ in parallel with 1000pF, providing compatibility with PC-to-PC communication software (such as LapLink™). Transmitters can be paralleled to drive multiple receivers or mice.

The MAX3222E/MAX3237E/MAX3241E/MAX3246E transmitters are disabled and the outputs are forced into a high-impedance state when the device is in shutdown mode ($\overline{SHDN}$ = GND). The MAX3222E/MAX3232E/MAX3237E/MAX3241E/MAX3246E permit the outputs to be driven up to ±12V in shutdown.

The MAX3222E/MAX3232E/MAX3241E/MAX3246E transmitter inputs do not have pullup resistors. Connect unused inputs to GND or V_{CC}. The MAX3237E's transmitter inputs have a 400kΩ active positive-feedback resistor, allowing unused inputs to be left unconnected.

MAX3237E MegaBaud Operation

For higher-speed serial communications, the MAX3237E features MegaBaud operation. In MegaBaud operating mode (MBAUD = V_{CC}), the MAX3237E transmitters guarantee a 1Mbps data rate with worst-case loads of 3kΩ in parallel with 250pF for +3.0V < V_{CC} < +4.5V. For +5V ±10% operation, the MAX3237E transmitters guarantee a 1Mbps data rate into worst-case loads of 3kΩ in parallel with 1000pF.

RS-232 Receivers

The receivers convert RS-232 signals to CMOS-logic output levels. The MAX3222E/MAX3237E/MAX3241E/MAX3246E receivers have inverting three-state outputs. Drive $\overline{EN}$ high to place the receiver(s) into a high-impedance state. Receivers can be either active or inactive in shutdown (Table 1).

LapLink is a trademark of Traveling Software.

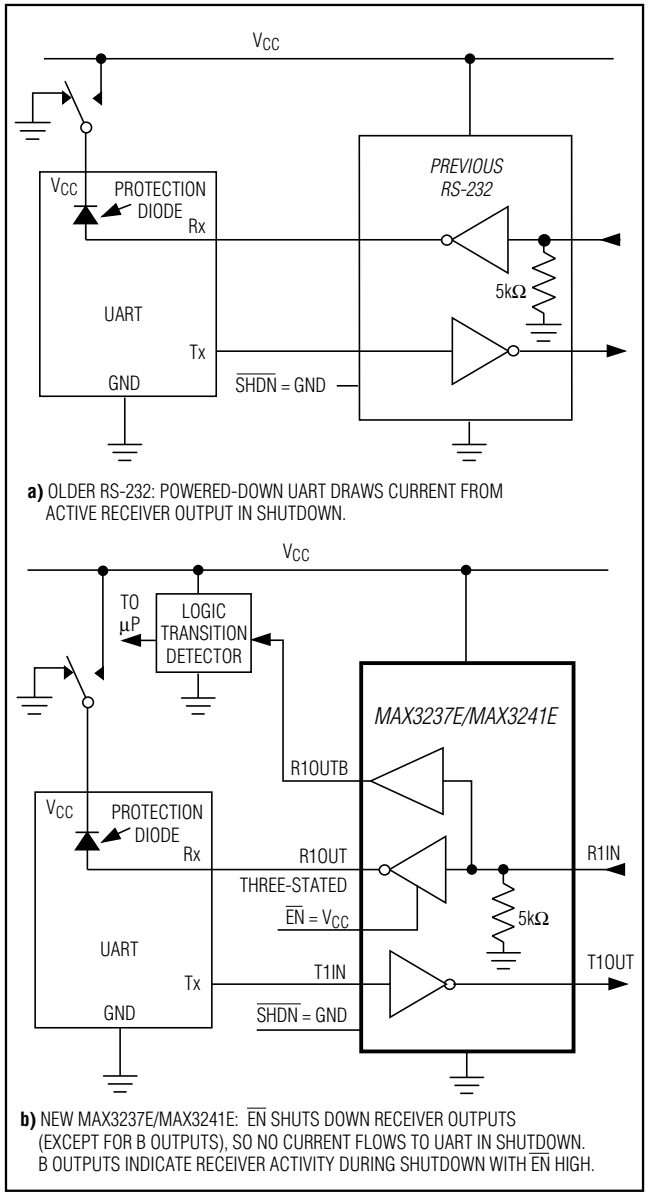

Figure 2. Detection of RS-232 Activity when the UART and Interface are Shut Down; Comparison of MAX3237E/MAX3241E (b) with Previous Transceivers (a)

The complementary outputs on the MAX3237E/MAX3241E (R_OUTB) are always active, regardless of the state of $\overline{EN}$ or $\overline{SHDN}$. This allows the device to be used for ring indicator applications without forward biasing other devices connected to the receiver outputs. This is ideal for systems where V_{CC} drops to zero in shutdown to accommodate peripherals such as UARTs (Figure 2).

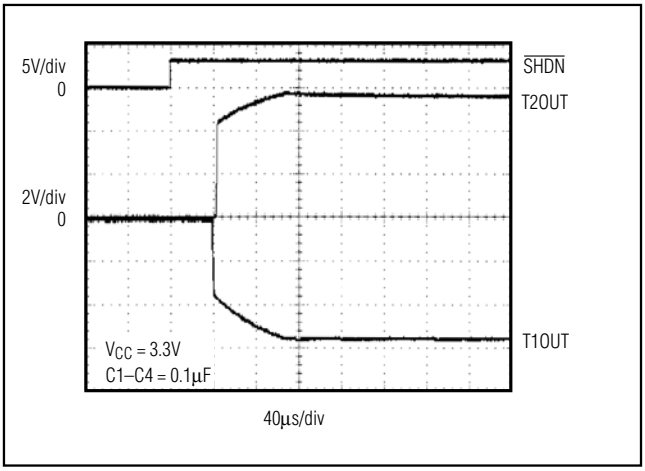

Figure 3. Transmitter Outputs Recovering from Shutdown or Powering Up

MAX3222E/MAX3237E/MAX3241E/ MAX3246E Shutdown Mode

Supply current falls to less than 1µA in shutdown mode ($\overline{SHDN}$ = low). The MAX3237E's supply current falls to10nA (typ) when all receiver inputs are in the invalid range (-0.3V < R_IN < +0.3V). When shut down, the device's charge pumps are shut off, V+ is pulled down to V_{CC}, V- is pulled to ground, and the transmitter outputs are disabled (high impedance). The time required to recover from shutdown is typically 100µs, as shown in Figure 3. Connect $\overline{SHDN}$ to V_{CC} if shutdown mode is not used. $\overline{SHDN}$ has no effect on R_OUT or R_OUTB (MAX3237E/MAX3241E).

±15kV ESD Protection

As with all Maxim devices, ESD-protection structures are incorporated to protect against electrostatic discharges encountered during handling and assembly. The driver outputs and receiver inputs of the MAX3222E/MAX3232E/MAX3237E/MAX3241E/MAX3246E have extra protection against static electricity. Maxim's engineers have developed state-of-the-art structures to protect these pins against ESD of ±15kV without damage. The ESD structures withstand high ESD in all states: normal operation, shutdown, and powered down. After an ESD event, Maxim's E versions keep working without latchup, whereas competing RS-232 products can latch and must be powered down to remove latchup.

Furthermore, the MAX3237E logic I/O pins also have ±15kV ESD protection. Protecting the logic I/O pins to ±15kV makes the MAX3237E ideal for data cable applications.

Table 1. MAX3222E/MAX3237E/MAX3241E/ MAX3246E Shutdown and Enable Control Truth Table

$\overline{SHDN}$	$\overline{EN}$	T_OUT	R_OUT	R_OUTB (MAX3237E/ MAX3241E)
0	0	High impedance	Active	Active
0	1	High impedance	High impedance	Active
1	0	Active	Active	Active
1	1	Active	High impedance	Active

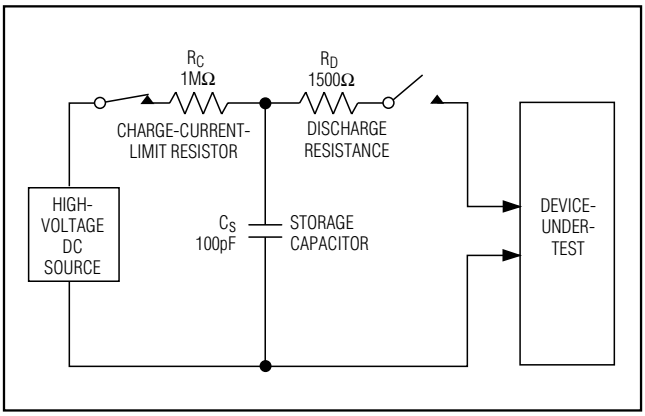

Figure 4a. Human Body ESD Test Model

ESD protection can be tested in various ways; the transmitter outputs and receiver inputs for the MAX3222E/MAX3232E/MAX3241E/MAX3246E are characterized for protection to the following limits:

- ±15kV using the Human Body Model
- ±8kV using the Contact Discharge method specified in IEC 1000-4-2
- ±9kV (MAX3246E only) using the Contact Discharge method specified in IEC 1000-4-2
- ±15kV using the Air-Gap Discharge method specified in IEC 1000-4-2

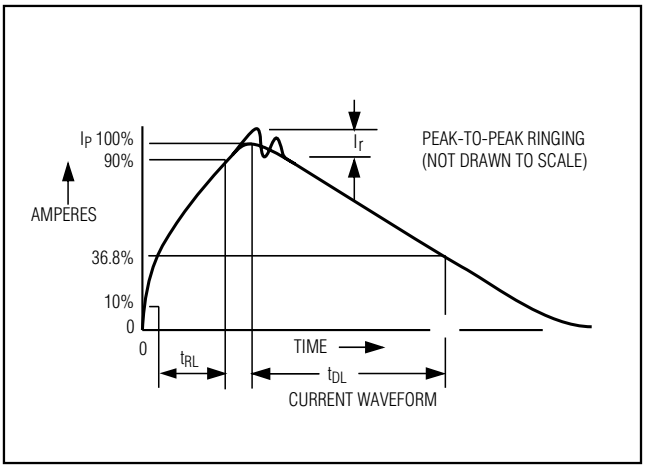

Figure 4b. Human Body Model Current Waveform

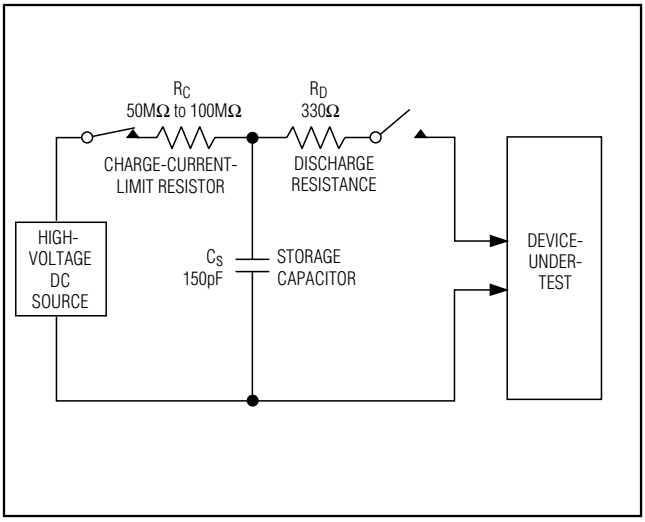

Figure 5a. IEC 1000-4-2 ESD Test Model

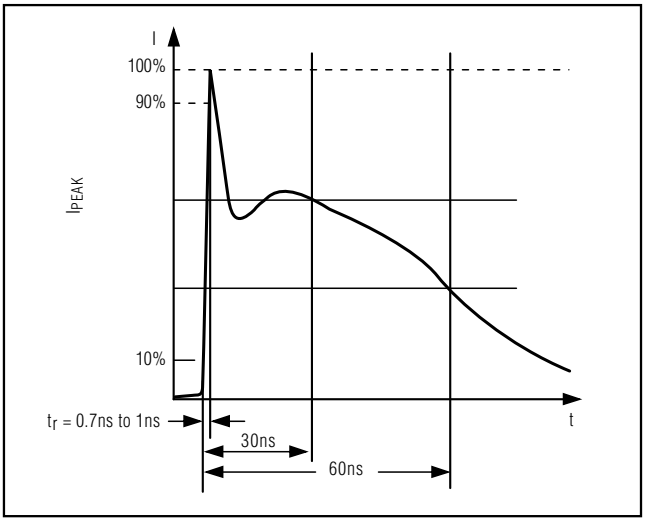

Figure 5b. IEC 1000-4-2 ESD Generator Current Waveform

Table 2. Required Minimum Capacitor Values

V_{CC} (V)	C1 (µF)	C2, C3, C4 (µF)
MAX3222E/MAX3232E/MAX3241E		
3.0 to 3.6	0.1	0.1
4.5 to 5.5	0.047	0.33
3.0 to 5.5	0.1	0.47
MAX3237E/MAX3246E		
3.0 to 3.6	0.22	0.22
3.15 to 3.6	0.1	0.1
4.5 to 5.5	0.047	0.33
3.0 to 5.5	0.22	1.0

Table 3. Logic-Family Compatibility with Various Supply Voltages

SYSTEM POWER-SUPPLY VOLTAGE (V)	V_{CC} SUPPLY VOLTAGE (V)	COMPATIBILITY
3.3	3.3	Compatible with all CMOS families
5	5	Compatible with all TTL and CMOS families
5	3.3	Compatible with ACT and HCT CMOS, and with AC, HC, or CD4000 CMOS

For the MAX3237E, all logic and RS-232 I/O pins are characterized for protection to ±15kV per the Human Body Model.

ESD Test Conditions

ESD performance depends on a variety of conditions. Contact Maxim for a reliability report that documents test setup, test methodology, and test results.

Human Body Model

Figure 4a shows the Human Body Model, and Figure 4b shows the current waveform it generates when discharged into a low impedance. This model consists of a 100pF capacitor charged to the ESD voltage of interest, which is then discharged into the test device through a 1.5kΩ resistor.

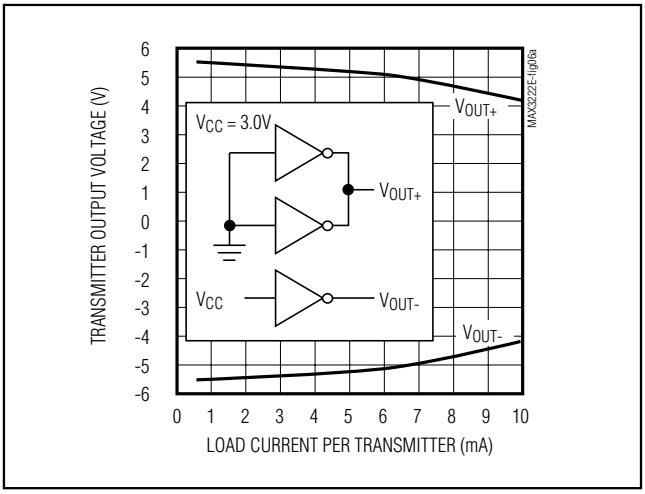

Figure 6a. MAX3241E Transmitter Output Voltage vs. Load Current Per Transmitter

IEC 1000-4-2

The IEC 1000-4-2 standard covers ESD testing and performance of finished equipment; it does not specifically refer to integrated circuits. The MAX3222E/MAX3232E/MAX3237E/MAX3241E/MAX3246E help you design equipment that meets level 4 (the highest level) of IEC 1000-4-2, without the need for additional ESD-protection components.

The major difference between tests done using the Human Body Model and IEC 1000-4-2 is higher peak current in IEC 1000-4-2, because series resistance is lower in the IEC 1000-4-2 model. Hence, the ESD withstand voltage measured to IEC 1000-4-2 is generally lower than that measured using the Human Body Model. Figure 5a shows the IEC 1000-4-2 model, and Figure 5b shows the current waveform for the ±8kV IEC 1000-4-2 level 4 ESD Contact Discharge test. The Air-Gap Discharge test involves approaching the device with a charged probe. The Contact Discharge method connects the probe to the device before the probe is energized.

Machine Model

The Machine Model for ESD tests all pins using a 200pF storage capacitor and zero discharge resistance. Its objective is to emulate the stress caused by contact that occurs with handling and assembly during manufacturing. All pins require this protection during manufacturing, not just RS-232 inputs and outputs. Therefore, after PC board assembly, the Machine Model is less relevant to I/O ports.

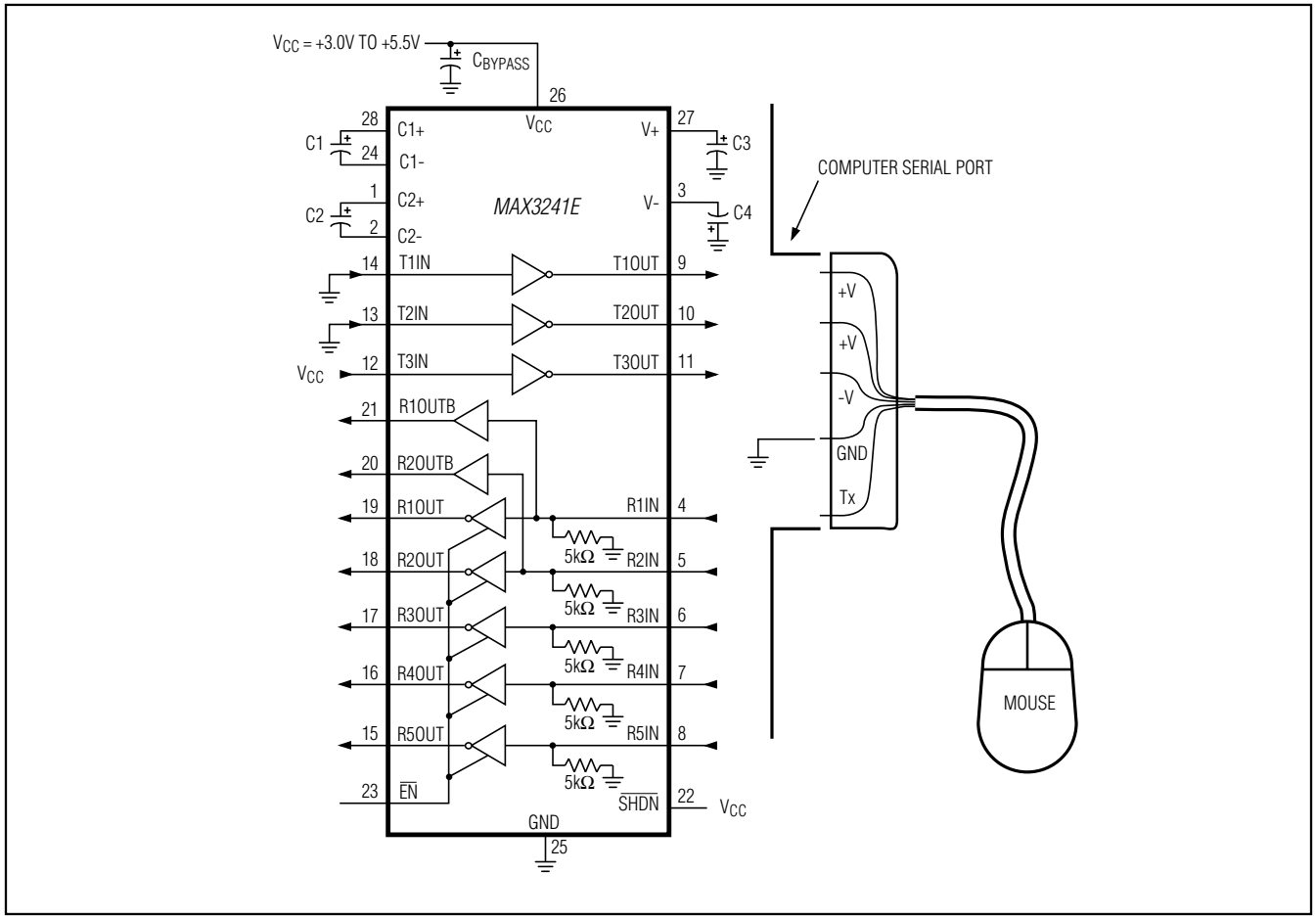

Figure 6b. Mouse Driver Test Circuit

Applications Information

Capacitor Selection

The capacitor type used for C1–C4 is not critical for proper operation; polarized or nonpolarized capacitors can be used. The charge pump requires 0.1µF capacitors for 3.3V operation. For other supply voltages, see Table 2 for required capacitor values. Do not use values smaller than those listed in Table 2. Increasing the capacitor values (e.g., by a factor of 2) reduces ripple on the transmitter outputs and slightly reduces power consumption. C2, C3, and C4 can be increased without changing C1's value. **However, do not increase C1 without also increasing the values of C2, C3, C4, and C_{BYPASS} to maintain the proper ratios (C1 to the other capacitors).**

When using the minimum required capacitor values, make sure the capacitor value does not degrade excessively with temperature. If in doubt, use capacitors with a larger nominal value. The capacitor's equivalent series resistance (ESR), which usually rises at low temperatures, influences the amount of ripple on V+ and V-.

Power-Supply Decoupling

In most circumstances, a 0.1µF V_{CC} bypass capacitor is adequate. In applications sensitive to power-supply noise, use a capacitor of the same value as charge-pump capacitor C1. Connect bypass capacitors as close to the IC as possible.

Operation Down to 2.7V

Transmitter outputs meet EIA/TIA-562 levels of ±3.7V with supply voltages as low as 2.7V.

Transmitter Outputs Recovering from Shutdown

Figure 3 shows two transmitter outputs recovering from shutdown mode. As they become active, the two transmitter outputs are shown going to opposite RS-232 levels (one transmitter input is high; the other is low). Each transmitter is loaded with 3kΩ in parallel with 2500pF. The transmitter outputs display no ringing or undesirable transients as they come out of shutdown. Note that the transmitters are enabled only when the magnitude of V- exceeds approximately -3.0V.

Mouse Drivability

The MAX3241E is designed to power serial mice while operating from low-voltage power supplies. It has been tested with leading mouse brands from manufacturers such as Microsoft and Logitech. The MAX3241E successfully drove all serial mice tested and met their current and voltage requirements.

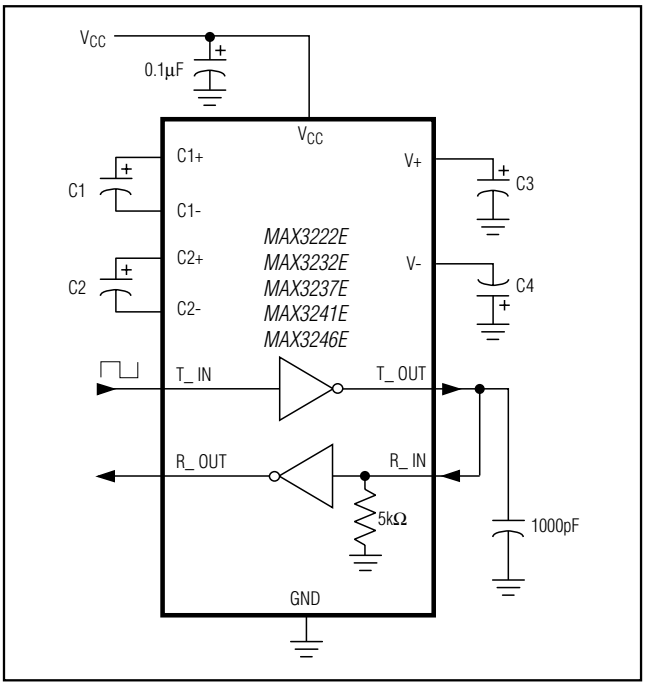

Figure 7. Loopback Test Circuit

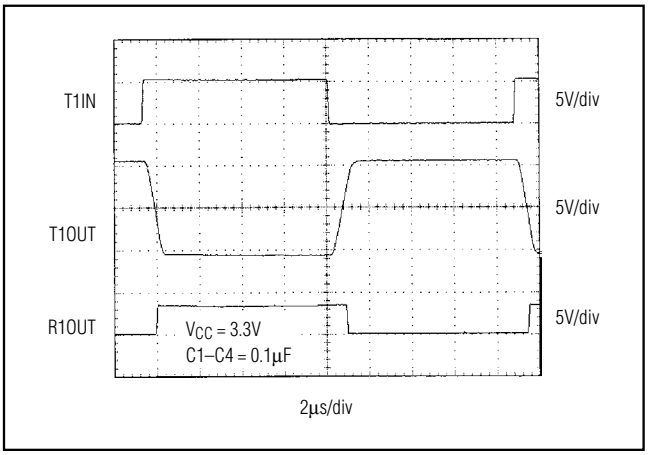

Figure 8. MAX3241E Loopback Test Result at 120kbps

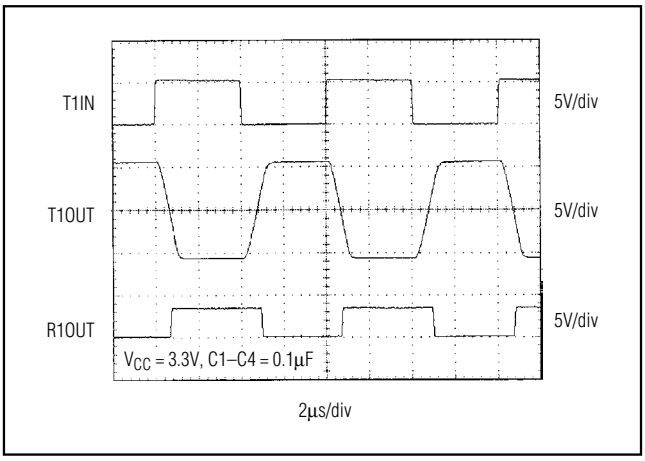

Figure 9. MAX3241E Loopback Test Result at 250kbps

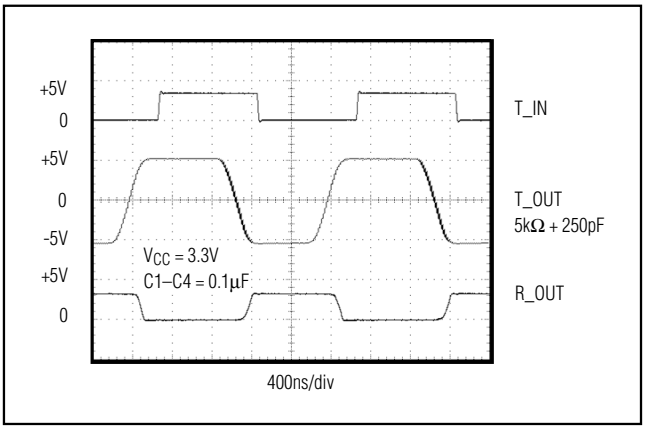

Figure 10. MAX3237E Loopback Test Result at 1000kbps (MBAUD = V_{CC})

Figure 6a shows the transmitter output voltages under increasing load current at +3.0V. Figure 6b shows a typical mouse connection using the MAX3241E.

High Data Rates

The MAX3222E/MAX3232E/MAX3237E/MAX3241E/MAX3246E maintain the RS-232 ±5V minimum transmitter output voltage even at high data rates. Figure 7 shows a transmitter loopback test circuit. Figure 8 shows a loopback test result at 120kbps, and Figure 9 shows the same test at 250kbps. For Figure 8, all transmitters were driven simultaneously at 120kbps into RS-232 loads in parallel with 1000pF. For Figure 9, a single transmitter was driven at 250kbps, and all transmitters were loaded with an RS-232 receiver in parallel with 1000pF.

The MAX3237E maintains the RS-232 ±5.0V minimum transmitter output voltage at data rates up to 1Mbps. Figure 10 shows a loopback test result at 1Mbps with MBAUD = V_{CC}. For Figure 10, all transmitters were loaded with an RS-232 receiver in parallel with 250pF.

Interconnection with 3V and 5V Logic

The MAX3222E/MAX3232E/MAX3237E/MAX3241E/MAX3246E can directly interface with various 5V logic families, including ACT and HCT CMOS. See Table 3 for more information on possible combinations of interconnections.

UCSP Reliability

The UCSP represents a unique packaging form factor that may not perform equally to a packaged product through traditional mechanical reliability tests. UCSP reliability is integrally linked to the user's assembly methods, circuit board material, and usage environment. The user should closely review these areas when considering use of a UCSP package. Performance through Operating Life Test and Moisture Resistance remains uncompromised as the wafer-fabrication process primarily determines it.

Mechanical stress performance is a greater consideration for a UCSP package. UCSPs are attached through direct solder contact to the user's PC board, foregoing the inherent stress relief of a packaged product lead frame. Solder joint contact integrity must be considered. Table 4 shows the testing done to characterize the UCSP reliability performance. In conclusion, the UCSP is capable of performing reliably through environmental stresses as indicated by the results in the table. Additional usage data and recommendations are detailed in Application Note 1891: *Wafer-Level Packaging (WLP) and Its Applications*.

Table 4. Reliability Test Data

TEST	CONDITIONS	DURATION	FAILURES PER SAMPLE SIZE
Temperature Cycle	T_A = -35°C to +85°C, T_A = -40°C to +100°C	150 cycles, 900 cycles	0/10, 0/200
Operating Life	T_A = +70°C	240 hours	0/10
Moisture Resistance	T_A = +20°C to +60°C, 90% RH	240 hours	0/10
Low-Temperature Storage	T_A = -20°C	240 hours	0/10
Low-Temperature Operational	T_A = -10°C	24 hours	0/10
Solderability	8-hour steam age	—	0/15
ESD	±15kV, Human Body Model	—	0/5
High-Temperature Operating Life	T_J = +150°C	168 hours	0/45

Pin Configurations

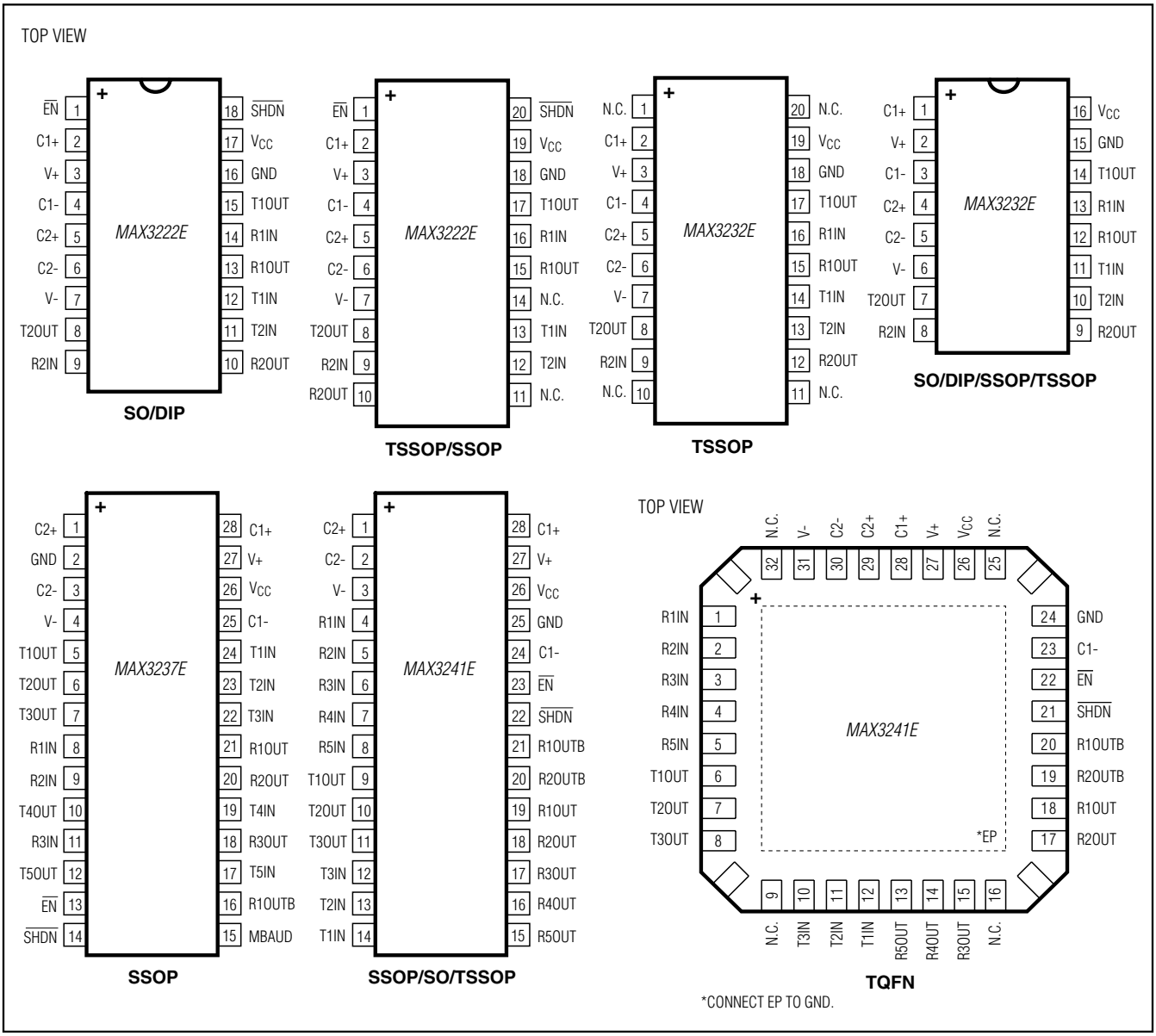

Pin Configurations (continued)

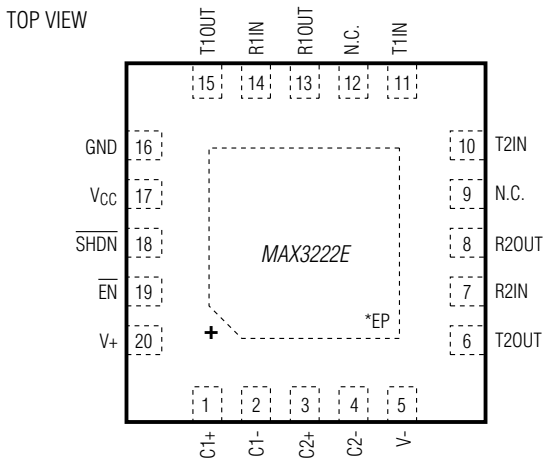

TQFN

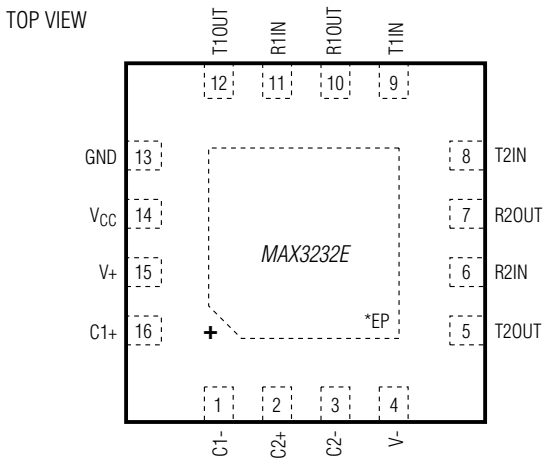

TQFN

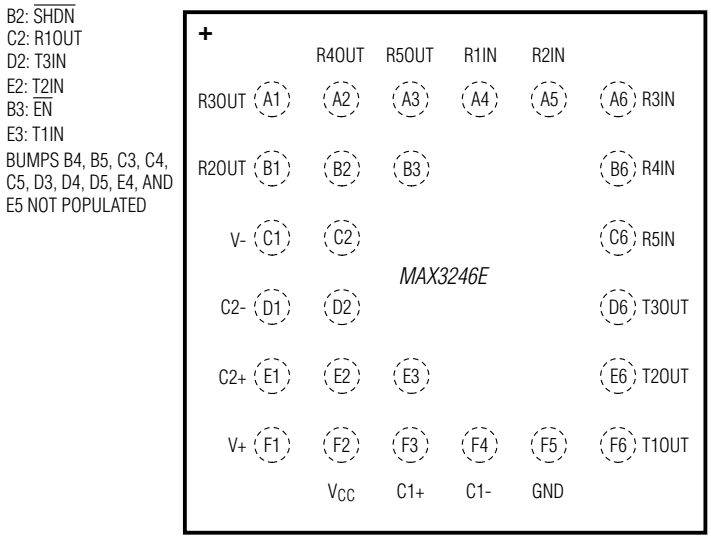

UCSP

*CONNECT EP TO GND.

Typical Operating Circuits

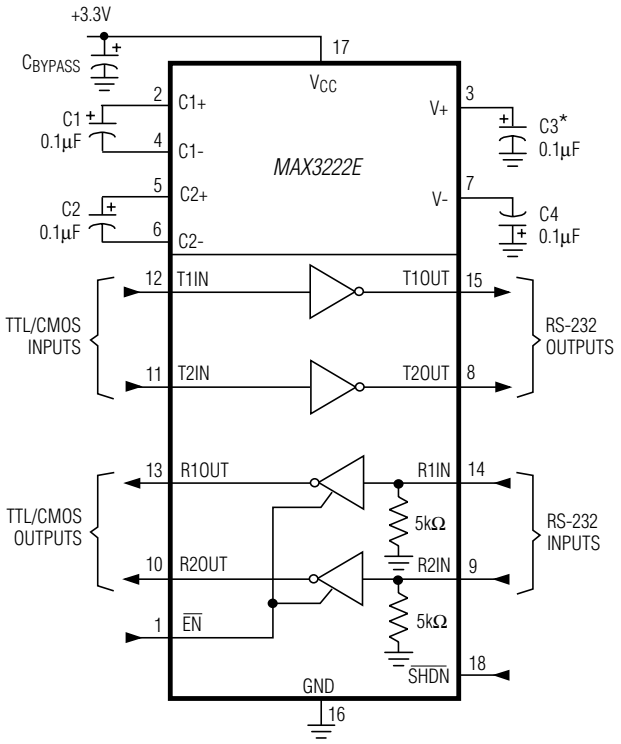

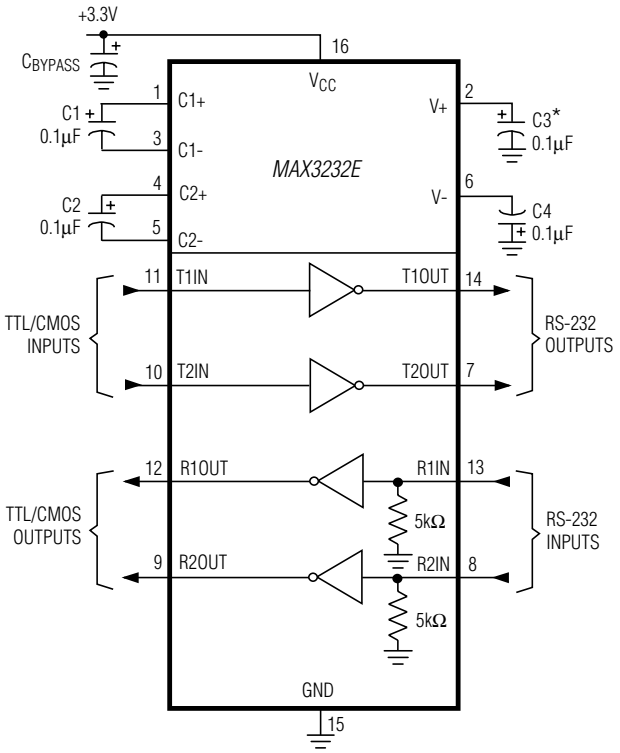

*C3 CAN BE RETURNED TO EITHER V_{CC} OR GROUND.

NOTE: PIN NUMBERS REFER TO SO/DIP PACKAGES.
MAX3222E PINOUT REFERS TO SO/DIP PACKAGES.
MAX3232E PINOUT REFERS TO TSSOP/SSOP/SO/DIP PACKAGES

SEE TABLE 2 FOR CAPACITOR SELECTION.

Typical Operating Circuits (continued)

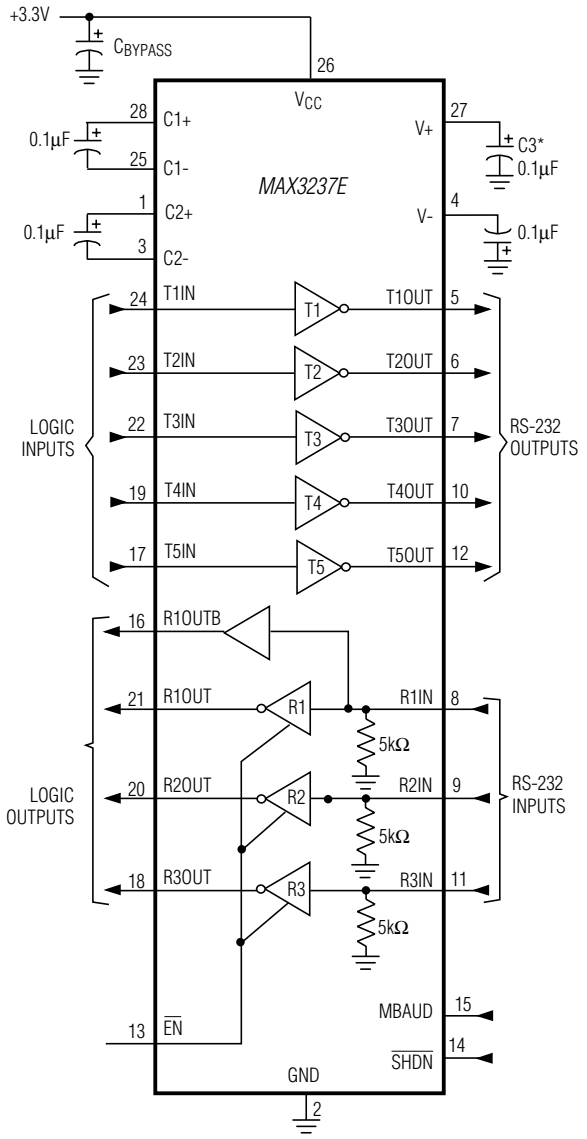

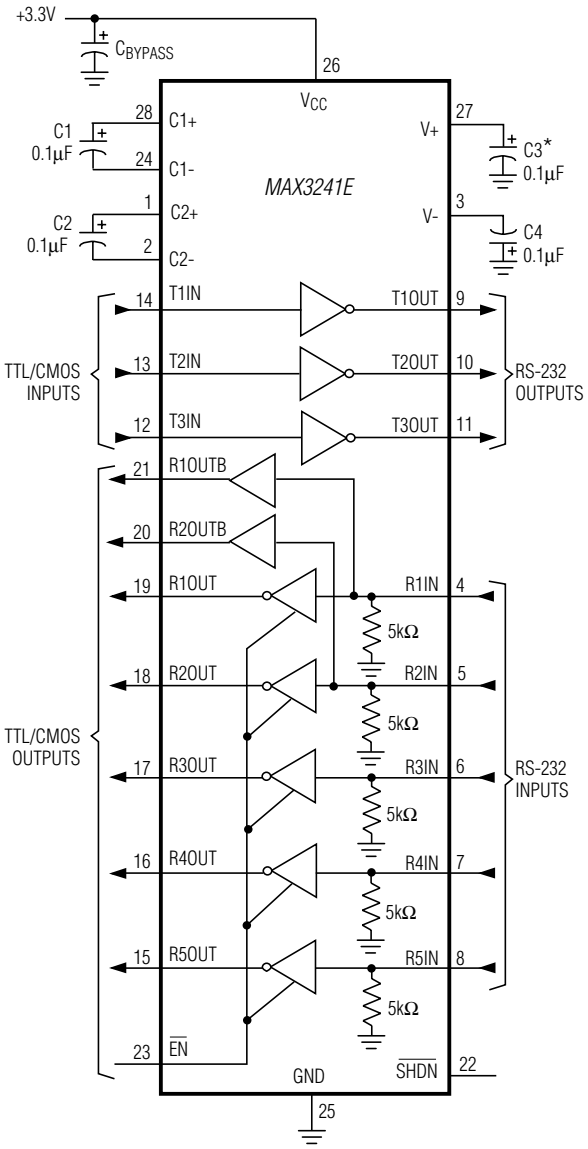

*C3 CAN BE RETURNED TO EITHER V_{CC} OR GROUND.

Typical Operating Circuits (continued)

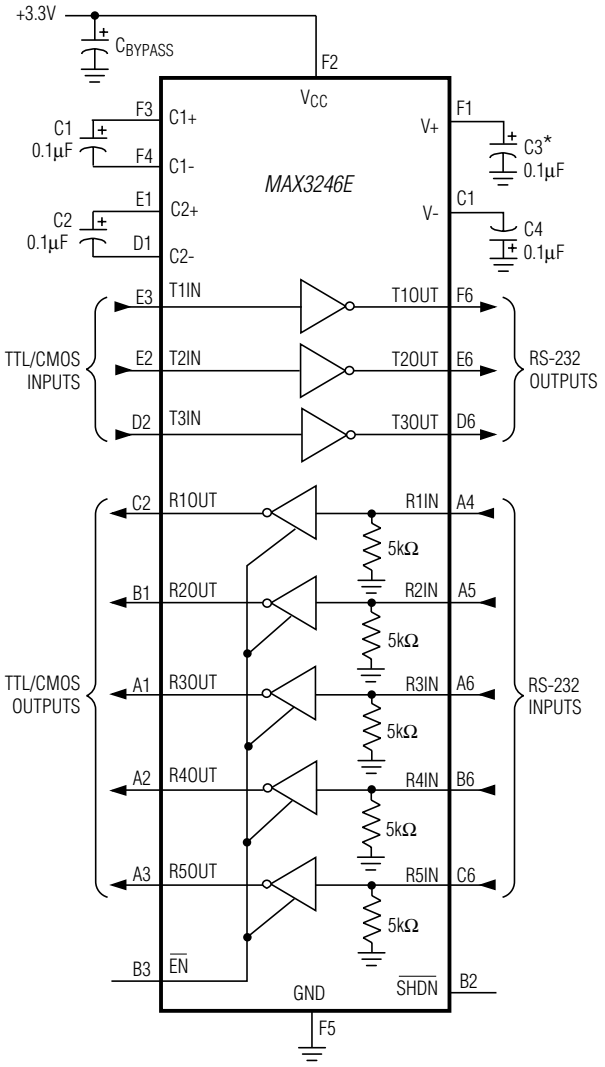

*C3 CAN BE RETURNED TO EITHER V_{CC} OR GROUND.

Ordering Information (continued)

PART	TEMP RANGE	PIN-PACKAGE
MAX3232ECTE+	0°C to +70°C	16 TQFN-EP** (5mm x 5mm)
MAX3232ECUE+	0°C to +70°C	16 TSSOP
MAX3232ECUP+	0°C to +70°C	20 TSSOP
MAX3232EEAE+	-40°C to +85°C	16 SSOP
MAX3232EEWE+	-40°C to +85°C	16 Wide SO
MAX3232EEPE+	-40°C to +85°C	16 Plastic DIP
MAX3232EETE+	-40°C to +85°C	16 TQFN-EP** (5mm x 5mm)
MAX3232EEUE+	-40°C to +85°C	16 TSSOP
MAX3232EEUP+	-40°C to +85°C	20 TSSOP
MAX3237ECAI+	0°C to +70°C	28 SSOP
MAX3237EEAI+	-40°C to +85°C	28 SSOP
MAX3241ECAI+	0°C to +70°C	28 SSOP
MAX3241ECWI+	0°C to +70°C	28 Wide SO
MAX3241ECUI+	0°C to +70°C	28 TSSOP
MAX3241ECTJ+	0°C to +70°C	32 TQFN-EP** (7mm x 7mm)
MAX3241EEAI+	-40°C to +85°C	28 SSOP
MAX3241EEWI+	-40°C to +85°C	28 Wide SO
MAX3241EEUI+	-40°C to +85°C	28 TSSOP
MAX3246ECBX-T+	0°C to +70°C	6 x 6 UCSP†
MAX3246EEBX-T+	-40°C to +85°C	6 x 6 UCSP†

+Denotes a lead(Pb)-free/RoHS-compliant package.
†Requires solder temperature profile described in the Absolute Maximum Ratings section. UCSP Reliability is integrally linked to the user's assembly methods, circuit board material, and environment. Refer to the UCSP Reliability Notice in the UCSP Reliability section of this datasheet for more information.

***EP = Exposed pad.*

Chip Information

PROCESS: BICMOS

Selector Guide

PART	NO. OF DRIVERS/ RECEIVERS	LOW-POWER SHUTDOWN	GUARANTEED DATA RATE (bps)
MAX3222E	2/2	✔	250k
MAX3232E	2/2	—	250k
MAX3237E (Normal)	5/3	✔	250k
MAX3237E (MegaBaud)	5/3	✔	1M
MAX3241E	3/5	✔	250k
MAX3246E	3/5	✔	250k

Package Information

For the latest package outline information and land patterns, go to **www.maxim-ic.com/packages**. Note that a "+", "#", or "-" in the package code indicates RoHS status only. Package drawings may show a different suffix character, but the drawing pertains to the package regardless of RoHS status.

PACKAGE TYPE	PACKAGE CODE	OUTLINE NO.	LAND PATTERN NO.
20 TQFN	T2055+5	20-0140	90-0010
20 TSSOP	H20+2	21-0066	90-0116
20 SSOP	A20+1	21-0056	90-0094
18 Wide SO	W18+1	21-0042	90-0181
18 PDIP	P18+5	21-0043	—
16 SSOP	A16+2	21-0056	90-0106
16 Wide SO	W16+3	21-0042	90-0107
16 PDIP	P16+1	21-0043	—
16 TQFN	T1655+2	21-0140	90-0072
16 TSSOP	U16+1	21-0066	90-0117
28 SSOP	A28+1	21-0056	90-0095
28 Wide SO	W28+6	21-0042	90-0109
28 TSSOP	U28+2	21-0066	90-0171
32 TQFN	T3277+2	21-0144	90-0125
6x6 HCSP	B36+3	21-0082	Refer to Application Note 1891

Revision History

REVISION NUMBER	REVISION DATE	DESCRIPTION	PAGES CHANGED
11	10/07	Corrected Package Information	22–28
12	12/10	Changed all parts to lead free in the *Ordering Information*, added automotive qualified part to *Ordering Information*, corrected capacitor in *Typical Operating Circuits*	1, 19

Maxim cannot assume responsibility for use of any circuitry other than circuitry entirely embodied in a Maxim product. No circuit patent licenses are implied. Maxim reserves the right to change the circuitry and specifications without notice at any time. The parametric values (min and max limits) shown in the Electrical Characteristics table are guaranteed. Other parametric values quoted in this data sheet are provided for guidance.

© 2010 Maxim Integrated The Maxim logo and Maxim Integrated are trademarks of Maxim Integrated Products, Inc.

Общество с ограниченной ответственностью «МосЧип» ИНН 7719860671 / КПП 771901001
Адрес: 105318, г.Москва, ул.Щербаковская д.3, офис 1107

Данный компонент на территории Российской Федерации

Вы можете приобрести в компании MosChip.

Для оперативного оформления запроса Вам необходимо перейти по данной ссылке:

http://moschip.ru/get-element

Вы можете разместить у нас заказ для любого Вашего проекта, будь то серийное производство или разработка единичного прибора.

В нашем ассортименте представлены ведущие мировые производители активных и пассивных электронных компонентов.

Нашей специализацией является поставка электронной компонентной базы двойного назначения, продукции таких производителей как XILINX, Intel (ex.ALTERA), Vicor, Microchip, Texas Instruments, Analog Devices, Mini-Circuits, Amphenol, Glenair.

Сотрудничество с глобальными дистрибьюторами электронных компонентов, предоставляет возможность заказывать и получать с международных складов практически любой перечень компонентов в оптимальные для Вас сроки.

На всех этапах разработки и производства наши партнеры могут получить квалифицированную поддержку опытных инженеров.

Система менеджмента качества компании отвечает требованиям в соответствии с ГОСТ Р ИСО 9001, ГОСТ РВ 0015-002 и ЭС РД 009

Офис по работе с юридическими лицами:

105318, г.Москва, ул.Щербаковская д.3, офис 1107, 1118, ДЦ «Щербаковский»

Телефон: +7 495 668-12-70 (многоканальный)

Факс: +7 495 668-12-70 (доб.304)

E-mail: info@moschip.ru

Skype отдела продаж:
moschip.ru
moschip.ru_4
moschip.ru_6
moschip.ru_9