WIRE SIZE AWG	WIRE SIZE METRIC	INSULATION DIAMETER REF.	MVL UNSEALED PART NO.	MVL MATL TYPE PLATE OPT.	DELPHI UNSEALED PLATED PART NO.	DELPHI PART REV.	DELPHI NMCI REV.	DELPHI UNPLATED PART NO.*	DELPHI PART REV.	DELPHI NMCI REV.	MVL SEALED PART NO.	MVL MATL TYPE PLATE OPT.	DELPHI SEALED PLATED PART NO.	DELPHI PART REV.	DELPHI NMCI REV.	DELPHI UNPLATED PART NO.*	DELPHI PART REV. UNPLATED	GAGE STAMP	A	B	Ø (C1)	C2	Ø (D1)	D2	K	L	(V)	(W)	TYPE OF GRIP
10/12	4.0/6.0	4.3/3.0									---	2,7	33400513	01	AA			10AG	5.6	7.6	2.30	3.4	5.00	6.0	0.30	1.10	31.2	8.0	SEALED
											54001027	1,5	15516298	01	AA			10											
			---	2,7	33400512	01	AA											10AG		6.8			3.20	4.5		0.60	30.7	7.5	UNSEALED
			54001020	2,3	15512730	01	AA	15519823	01	AA								10AUS											
			54001001	1,5	10762774	03	AF											10											
2.5	2.5/3.0	3.4/3.0									F235410	2,7						12AG	5.6	7.6	2.30	3.2	4.60	5.7	0.30	1.00	31.2	8.0	SEALED
											F535410	3,6						12TS											
											F808800	1,5	15509074	01	AA			12											
																		12AG		---			---	---		---	---	---	UNSEALED NOT AVAILABLE
																		12TS											
																		12											
14/16	1.0/1.5	2.8/2.1									F035410	2,7						14AG	4.3	6.4	1.45	2.6	4.20	5.6	---	1.40	31.2	8.0	SEALED
											F335410	3,6						14TS											
											54001447	1,5						14											
			---	2,7	33400514	01	AA											14AG		5.1			2.25	3.5		0.60	30.7	7.5	UNSEALED
			---	2,4	33400515	01	AA											14AUA											
			54001441	2,3	13681974	01	AA	15519825	01	AA								14AU											
			54001401	1,5	10757692	03	AF											14											
2(18/20)	2(1.0/0.5)	2(2.2/1.4)	54001301	1,5	10757693	03	AA											13	4.4	6.3	1.00	3.1	1.75	4.3	---	0.60	30.7	7.5	UNSEALED
18/20	1.0/0.5	2.2/1.4									F135410	2,7						18AG	3.4	5.5	1.00	2.3	3.60	4.5	---	1.10	31.2	8.0	SEALED
											F435410	3,6						18TS											
											54001877	1,5						18											
			---	2,7	33400516	01	AA											18AG		4.2			1.75	3.0		0.60	30.7	7.5	UNSEALED
			F875200	2,4	15509076	01	AA	15520221	01	AA								18AUA											
			54001819	2,2	15425613	02	AA	15519829	01	AA								18AUD											
			54001818	2,3	15435215	01	AA	15519827	01	AA								18AUS											
			54001804	2,1	13805590	01	AA	15519824	01	AA								18AU											
			54001801	1,5	10762775	03	AF											18											
22	0.35	1.8/1.2	F975200	2,4	15520916	01	AA	15520917	01	AA								22AUA	3.1	3.6	1.00	2.2	1.40	2.7	---	0.60	30.7	7.5	UNSEALED
			54002230	2,3	33501642	01	AA											22AUS											
			54002229	2,2	15520890	01	AA	15520918	01	AA								22AUD											
			54002228	2,1														22AU											
			54002201	1,5	10762776	03	AF											22											

CABLE * SEAL (CS) UNSEALED (US)	WIRE SIZE AWG	WIRE SPEC. AWG	WIRE SIZE METRIC	WIRE SPEC METRIC	CONDUCTOR CRIMP HEIGHT AWG (SECT C-C) (+/-0.05)	CONDUCTOR CRIMP HEIGHT METRIC (SECT C-C) (+/-0.05)	CONDUCTOR CRIMP WIDTH (SECT C-C) (+/-0.10)	INSULATION CRIMP HEIGHT AWG (SECT D-D) (+/-0.05)	INSULATION CRIMP HEIGHT METRIC (SECT D-D) (+/-0.05)	INSULATION CRIMP WIDTH (SECT D-D) (+/-0.10)	INSULATION CRIMP PUNCH OPTION	INSL. GRIP FORM TYPE SECD-D
US	22	ESB-MIL123-A MS-8288	0.35	FLRY A-B ISO-6722	1.40	1.30	2.05	1.95	1.95	2.60	OPTION 2	2
CS	18		0.75/1.00		1.50	1.30/1.50	2.45	4.20*	4.15/4.20*	4.10*		2
	20		0.50		1.30	1.25		4.05*	4.05			2
US	18		0.75/1.00		1.50	1.30/1.50		2.35	2.35/2.45	2.80		2
	20		0.50		1.30	1.25		2.20	2.20			2
CS	14		2.00/2.50		1.95	1.75/1.80	3.05	5.00*	4.80/5.00*	5.20*		2
	16		1.50		1.80	1.70		4.50/3.5*	4.50*			2
US	14		2.00/2.50		1.95	1.75/1.80		3.20	3.10*/3.25	3.60		2
	16		1.50		1.80	1.70		2.90	3.00			2
US	2(18/20)		2(1.0-0.5)		1.90-1.60*	1.90-1.60*	3.25	3.7-2.3*	3.7-2.3*	4.30*	OPTION 1	1
CS	N/A		2.5		N/A	1.80	3.45	N/A	5.00	5.20	OPTION 2	2
US	N/A		2.5					N/A	N/A	N/A		2
CS	10		5.00/6.00		2.45	2.40*/2.50*	3.85	5.70*	5.7/5.9*	5.80*		2
	12		4.00		2.20	2.05		5.30*	5.50*			2
US	10		5.00/6.00		2.45	2.40*/2.50*		3.70	4.30	4.35	OPTION 1	1
	12		4.00		2.20	2.30		USE 12 GA TERMINAL	4.20			1

* NOT VERIFIED TO USCAR-21

CRIMP WIDTH	CORE/ INSULATION	INSULATION CRIMP OPTION	E ±0.03	F ±0.03	G ±0.03	J ±0.03	K ±0.03	L ±0.03 OFFSET BETWEEN ANVILS	M ±0.03	N ±0.03	P ±0.03	R ±0.03	S ±0.03	T ±0.03	U ±0.03
2.05	CONDUCTOR	---	0.92	0.53	0.12	2.56	1.99	---	1.97	---	---	---	---	---	---
2.45	CONDUCTOR	---	1.09	0.63	0.16	3.06	2.38	---	2.36	---	---	---	---	---	---
2.60	INSULATION	2	---	---	---	---	---	0.60	---	0.16	3.25	2.53	2.50	N/A	N/A
2.80	INSULATION	2	---	---	---	---	---	0.60	---	0.18	3.50	2.72	2.69	N/A	N/A
3.05	CONDUCTOR	---	1.36	0.79	0.22	3.81	2.96	---	---	---	---	---	---	---	---
3.25	CONDUCTOR	---	1..45	0.84	0.22	4.06	3.12	---	---	---	---	---	---	---	---
3.45	CONDUCTOR	---	1.54	0.89	0.24	4.31	3.35	---	3.32	---	---	---	---	---	---
3.60	INSULATION	2	---	---	---	---	---	0.60	---	0.25	4.50	3.50	3.46	N/A	N/A
3.85	CONDUCTOR	---	1.72	0.99	0.28	4.81	3.70	---	---	---	---	---	---	---	---
4.10	INSULATION	2	---	---	---	---	---	0.60	---	0.30	5.12	3.98	3.94	N/A	N/A
4.30	INSULATION	1	---	---	---	---	---	0.60	---	0.32	5.38	4.17	4.13	1.92	1.11
4.35	INSULATION	1	---	---	---	---	---	1.10	---	0.38	5.10	4.70	4.64	---	---
5.20	INSULATION	2	---	---	---	---	---	1.00	---	0.40	5.50	5.00	4.94	---	---
5.80	INSULATION	2	---	---	---	---	---	1.00	---	0.47	6.10	5.60	5.52	---	---

CRIMP TOOL INFORMATION (REF. ONLY)

STANDARD "B" FORM TOOLING DESIGN CONDUCTOR CRIMP

STANDARD "B" FORM TOOLING DESIGN INSULATION CRIMP OPTION 1

STANDARD "D" FORM TOOLING DESIGN INSULATION CRIMP OPTION 2

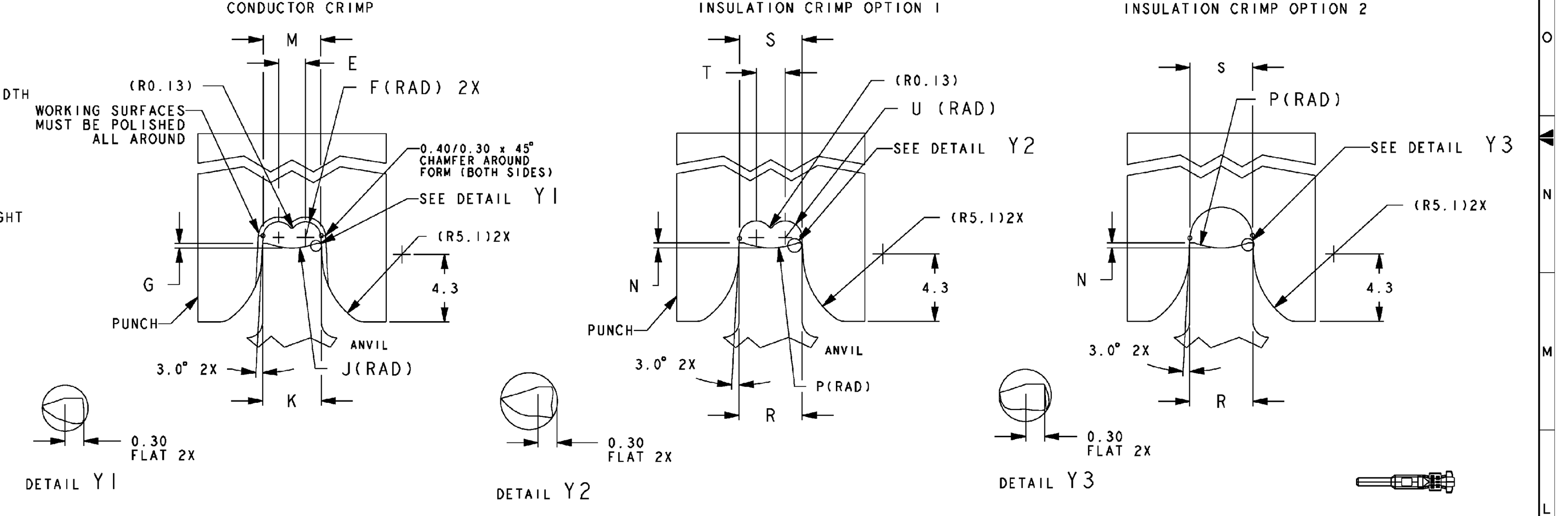

MATERIAL TYPE: PLATING OPT.	TYPE 2 OPTION # 1	TYPE 2 OPTION # 2	TYPE 2 OPTION # 3	TYPE 2 OPTION # 4	TYPE 1 OPTION # 5	TYPE 3 OPTION # 6	TYPE 2 OPTION # 7
PLATING	POST GOLD FLASH PALLADIUM (SHORTING BAR)	POST GOLD (SHORTING BAR)	POST HEAVY PALLADIUM-GOLD FLASH (IN LINE)	POST PALLADIUM- GOLD (IN LINE)	PRE-HOT DIP TIN (IN LINE)	PRE TIN/SILVER (INLINE)	POST SILVER (IN LINE)
ZONE "A"	SULFIMATE DUCTILE NICKEL	SULFIMATE DUCTILE NICKEL	SULFIMATE DUCTILE NICKEL	SULFIMATE DUCTILE NICKEL	HOT DIP TIN PLATE	TIN SILVER PLATE	ELECTRO DEPOSITED PURE SILVER, NICKLE UNDERPLATE NOT REQ.
ZONE "B"	ELECTRO MATT TIN PLATE	ELECTRO MATT TIN PLATE	ELECTRO MATT TIN PLATE	ELECTRO MATT TIN PLATE	HOT DIP TIN PLATE	TIN SILVER PLATE	ELECTRO MATT TIN PLATE
ZONE "C"	C-1, C-3: PLATE WITH HARD GOLD CAP OVER PURE PALLADIUM.	C-1, C-3: PLATE WITH HARD GOLD CAP	C2 ONLY: PLATE WITH HARD GOLD CAP OVER PURE PALLADIUM	C2 ONLY: PLATE WITH HARD GOLD CAP OVER PURE PALLADIUM	----	----	----
ZONE "D"	ELECTRO MATT TIN PLATE	ELECTRO MATT TIN PLATE	ELECTRO MATT TIN PLATE	ELECTRO MATT TIN PLATE	HOT DIP TIN PLATE	TIN SILVER PLATE	ELECTRO MATT TIN PLATE

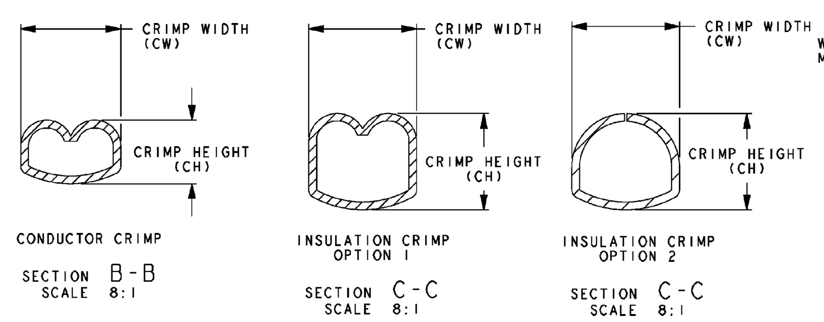

CONDUCTOR CRIMP — SECTION B-B SCALE 8:1

INSULATION CRIMP OPTION 1 — SECTION C-C SCALE 8:1

INSULATION CRIMP OPTION 2 — SECTION C-C SCALE 8:1

MVL REWOUND PART NO.	DELPHI REWOUND PART NO.	DELPHI REV.	DELPHI NMCI REV.	MVL PART NO. (MADE FROM)	DELPHI PART NO. (MADE FROM)
54001001RWC	15512726	01	AA	54001001	10762774
F808800RWA	15512734	01	AA	F808800	15509074
54001441RWC	15522351	01	AA	54001441	13681974
54001401RWA	15524503	01	AA	54001401	10757692
54001401RWC	13969990	01	AA		
54001301RWA	15524504	01	AA	54001301	10757693
54001819RWA	15512733	01	AA	54001819	15425613
54001819RWC	15513652	01	AA		
54001818RWA	15516296	01	AA	54001818	15435215
54001818RWC	13971791	01	AA		
54001804RWA	15512732	01	AA	54001804	13805590
54001804RWC	15516297	01	AA		
54001801RWA	15516294	01	AA	54001801	10762775
54001801RWC	13751022	01	AA		
54002230RWA	15512731	01	AA	54002230	33501642
54002201RWA	15512725	01	AA	54002201	10762776
54002201RWC	13969981	01	AA		

Available Types RWA or RWC

SEE REELING OPTIONS VIEW BELOW.

GAGE REQUIREMENTS

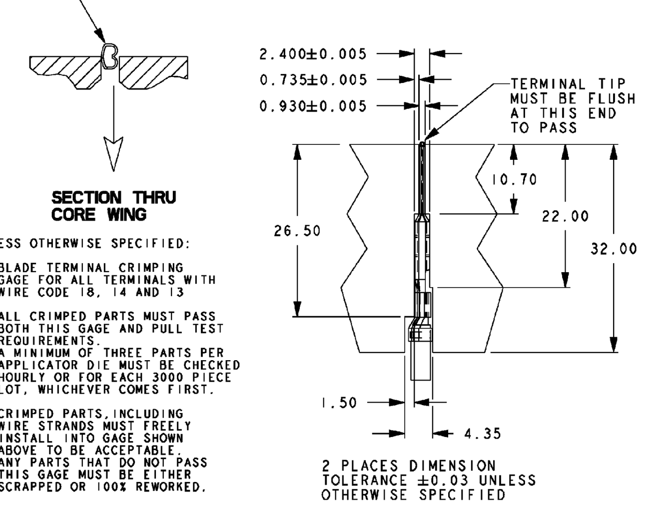

SECTION THRU CORE WING

UNLESS OTHERWISE SPECIFIED:

1. BLADE TERMINAL CRIMPING GAGE FOR ALL TERMINALS WITH WIRE CODE 18, 14 AND 13
2. ALL CRIMPED PARTS MUST PASS BOTH THIS GAGE AND PULL TEST REQUIREMENTS. A MINIMUM OF THREE PARTS PER APPLICATOR DIE MUST BE CHECKED HOURLY OR FOR EACH 3000 PIECE LOT, WHICHEVER COMES FIRST.
3. CRIMPED PARTS, INCLUDING WIRE STRANDS MUST FREELY INSTALL INTO GAGE SHOWN ABOVE TO BE ACCEPTABLE. ANY PARTS THAT DO NOT PASS THIS GAGE MUST BE EITHER SCRAPPED OR 100% REWORKED.

2 PLACES DIMENSION TOLERANCE ±0.03 UNLESS OTHERWISE SPECIFIED

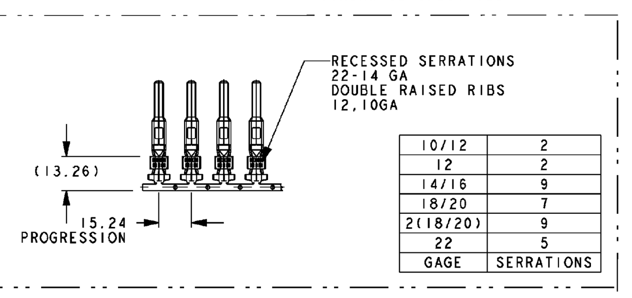

GAGE	SERRATIONS
10/12	2
12	2
14/16	9
18/20	7
2(18/20)	9
22	5

REELING OPTIONS

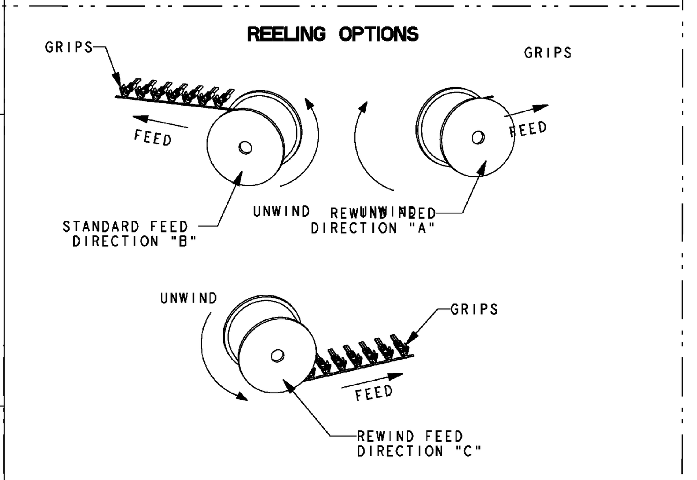

VIEW NOT TO SCALE

TERMINALS TO FEED AS SHOWN AFTER BEING REELED OFF PRODUCTION TOOL.
PACKAGING: PANCAKE REELS WITH PAPER INTERLEAF

NOTE:
1) DO NOT USE MVL PART NUMBERS FOR NEW ORDERS, MVL PART NUMBERS FOR REFERENCE ONLY
2) WHEN USING DELPHI PART NUMBERS, ORDER "DELPHI REWOUND PART NUMBER" (EX: 15512726)
3) IF DELPHI PART NUMBER IS NOT AVAILABLE REQUEST DELPHI PLATED PART NUMBER THEN "REWIND DIRECTION (AorC) (EX: 15520890 REWIND A)

VIEW OF PRECIOUS PLATING NOT TO SCALE

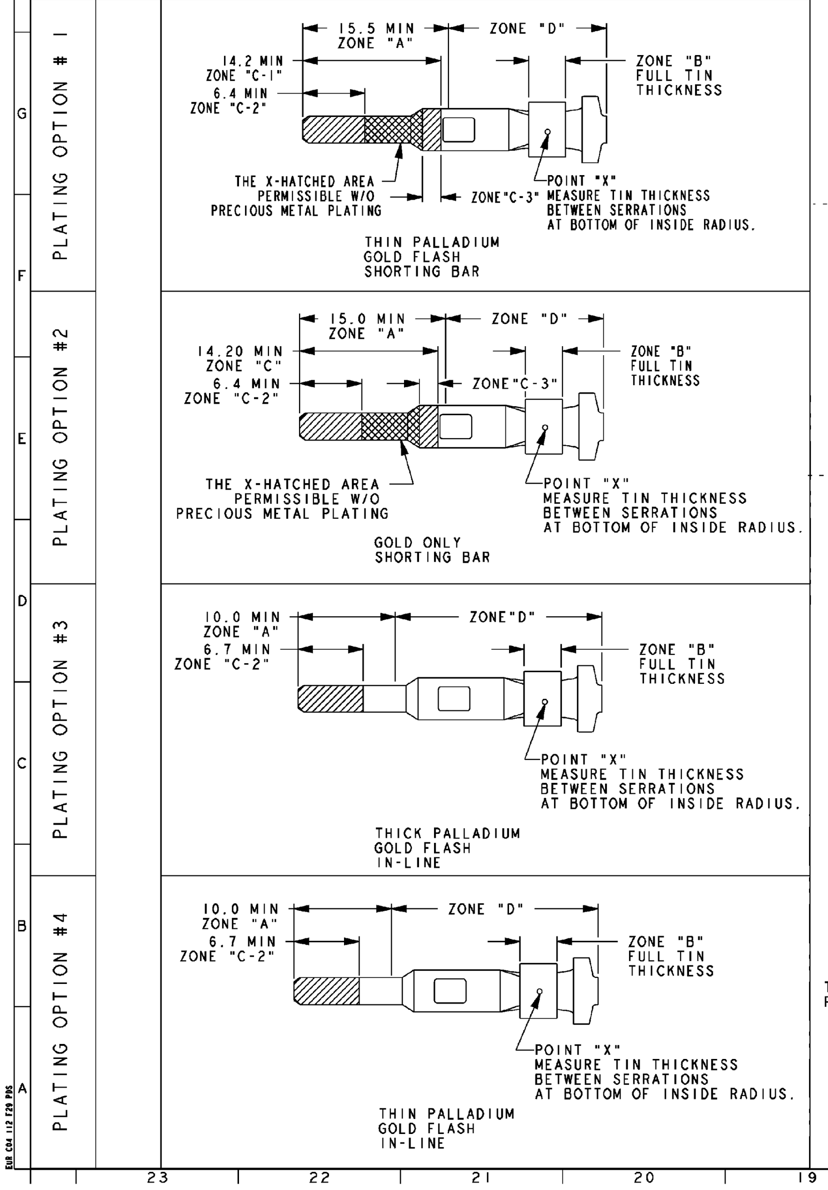

PLATING OPTION #1 / PLATING OPTION #2 / PLATING OPTION #3 / PLATING OPTION #4

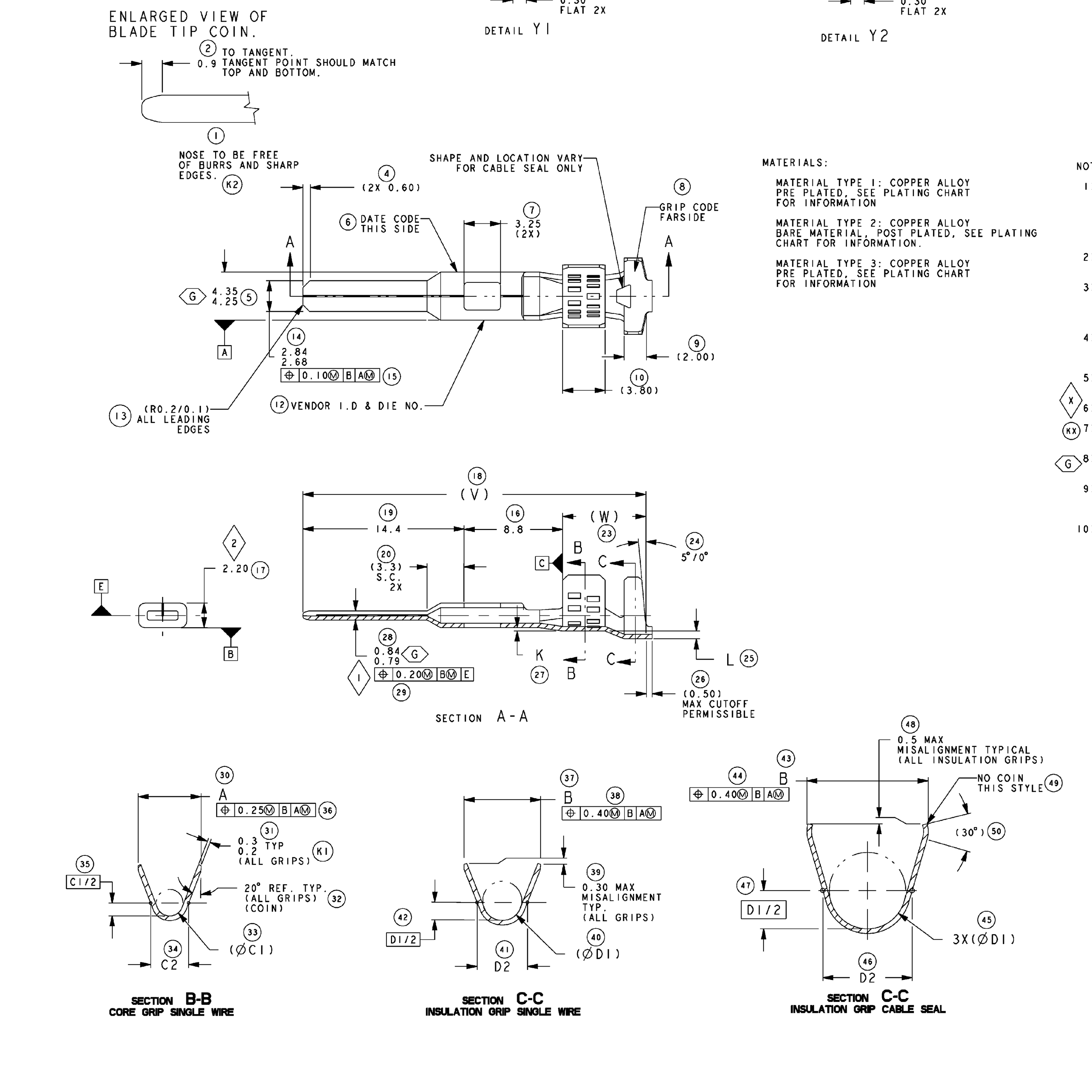

ENLARGED VIEW OF BLADE TIP COIN.

SECTION A-A

SECTION B-B CORE GRIP SINGLE WIRE

SECTION C-C INSULATION GRIP SINGLE WIRE

SECTION C-C INSULATION GRIP CABLE SEAL

MATERIALS:

MATERIAL TYPE 1: COPPER ALLOY PRE PLATED, SEE PLATING CHART FOR INFORMATION

MATERIAL TYPE 2: COPPER ALLOY BARE MATERIAL, POST PLATED, SEE PLATING CHART FOR INFORMATION.

MATERIAL TYPE 3: COPPER ALLOY PRE PLATED, SEE PLATING CHART FOR INFORMATION

NOTES:

1) CONFORMS TO ALL APPLICABLE SECTIONS OF SAE/USCAR-2 REV.3 EXCEPT TERMINAL BEND RESISTANCE SECTION 5.2.2
SAE/USCAR-12 REV 2
SAE/USCAR-21
FORD SDS VER 11
2) TERMINAL SYMMETRICAL ABOUT CENTERLINE EXCEPT AS SHOWN.
3) DIMENSIONAL TOLERANCE:
1 PLACE ±0.25
2 PLACE ±0.10
ANGULAR ±3°
4) FOR CAVITY SPECIFICATION INFORMATION REFERENCE F.C.I. DRAWING 15007 FOR UNSEALED CAVITY AND F.C.I. DRAWING C15006 FOR SEALED CAVITY
5) SEE USCAR DRAWING EWCAP-001 FOR DIRECT CONNECT MATING BLADE INFORMATION
6) (X) QUALITY ASSURANCE REQUIREMENTS PER USCAR REQUIREMENTS.(2)
7) (KX) INDICATES IN-PROCESS INSPECTION FOR MANUFACTURING DIMENSIONS OR SPECIFICATIONS. (2)
8) (G) INDICATES IN-PROCESS GAGE INSPECTION FOR MANUFACTURING DIMENSIONS. (2)
9) ONLY BALLOON DIMENSIONS AND NOTES ARE REQUIRED TO BE MEASURED AT PPAP. ALL OTHER DIMENSIONS AND NOTES WITHOUT BALLOONS SHOULD BE TREATED AS INFORMATIONAL.
10) LAST BALLOON NUMBER: 50, OMIT 3,11,21,22

CRIMP NOTES:

1. THE CRIMP AND CRIMP TOOLING DIMENSIONS HAVE BEEN ESTABLISHED AND VALIDATED TO USCAR-21 USING FCI TOOLS, MACHINES, AND PROCESSES. THE DIMENSIONS SHOWN ARE FOR REFERENCE.

2. WIRING SUPPLIERES ARE TO DEVELOP AND VALID THIER CRIMPING SPECIFICATIONS AND PROCESSES ACCORDING TO ALL ASPECTS OF USCAR-21 REV.2. NOTE THAT AS STATED IN USCAR-21, WIRING SUPPLIER DEFINED CRIMPING SPECIFICATIONS AND CRIMPING PROCESSES MAY IMPACT CONNECTOR FUNCTIONS. (SEE USCAR-21 REV.2 4.2.5.1); CONTACT DELPHI ENGINEERING FOR ANY NEEDED ASSISTANCE IN THIS REGARD.

3. DESIGN REFERENCE INFORMATION: IT IS RECOMMENDED THAT THE NOTED NOMINAL OFFSET BETWEEN THE CONDUCTOR GRIP AND INSULATION GRIP NOT BE CHANGED BY THE CRIMPING PROCESS. RESIZING THIS FEATURE DURING CIMPING CAN NEGATIVELY IMPACT CONNECTOR SYSTEM FUNCTION. ACCEPTBILITY OF THE ACTUAL NOTED CRMPED OFFSET, CRIMPING SPECIFICATION, AND CRIMPING PROCESS USED IS TO BE DETERMINED AS DIFINED IN CRIMP NOTE 2.

4. DESIGN FEFERENCE INFORMATION: CRIMPED TERMINALS ARE USED ON VARIOUS CONNECTOR APPLICATIONS. NORMALLY, FOR DESIGN PURPOSES, A CONDUTOR AND INSULATION CRIMP ANGLE TOLERANCE OF +/-3 DEGREES RELATIVE TO TERMINAL DATUM "B" CAN BE ASSUMED. ACTUAL CRIMP TOLERANCES DEFINED WITHIN A HARNESS MAKER'S CRIMPING PROCESS FOR A SPECIFIC CONNECTOR APPLICATION MUST BE VARIFIED AS SUITABLE BY FULL VALIDATION TO ALL ASPECTS OF USCAR-21 INCLUDING SECTION 4.2.5.

ECN-NO.	ZONE	CHANGE DESCRIPTION
13-00091	-	ECO421399 ADDED NMCI REV. COLUMNS, 0.20, BLADE THICK, TRUE POS. WAS 0.10 DIM
13-00091	-	ECO421054 - TABLE UPDATED WITH NEW DELPHI PART NUMBERS. DELPHI PART NUMBERS MOVED FROM MVL TO DELPH COLUMN IN TABLE.
13-00039	-	ECO421054 - DELPHI PART NUMBERS ADDED
-	-	REVISED AND REDRAWN IN PDS.

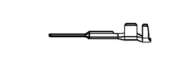

ACTUAL SIZE

NOTES

1. UNLESS OTHERWISE SPECIFIED AND/OR INDICATED:

DIMENSIONS ARE TO FACE OF VIEW SHOWN AND AUTOMATICALLY ROUNDED BY COMPUTER FOR INSPECTION (SEE MATH MODEL FOR PRECISE DIMENSIONS). FOR ALL OTHER DIMENSIONS NOT SHOWN BUT REQUIRED FOR TOOL BUILD, SEE MATH MODEL FOR PRECISE TOOL PATH DATA.

MVL PART NUMBER	MVL REV	SEALED	PLATED PART NUMBER	PLATED REV	PLATED N/P	PLATED MAT'L SPEC	PLATING PROCESS OPTION	UNPLATED PART NUMBER	UNPLATED REV	UNPLATED N/P	UNPLATED MAT'L SPEC
54001001	T	N	10762774	03	AG	M6565J00	5	-	-	-	-
54001001RWC	T	N	15512726	01	AA	10762774	-	-	-	-	
54001020	T	N	15512730	01	AB	15519823	3	15519823	01	AB	M6564J00
-	-	N	33400512	01	AB	33511843	7	33511843	01	-	M6564J00
54001027	T	Y	15516298	01	AA	M6565J00	5	-	-	-	-
-	-	Y	33400513	01	AA	33511844	7	33511844	01	-	M6564J00
F808800	T	Y	15509074	01	AA	M6565J00	5	-	-	-	-
F808800RWA	T	Y	15512734	01	AA	15509074	-	-	-	-	-
-	-	N	33400514	01	AA	33511841	7	33511841	01	-	M6564J00
-	-	N	33400515	01	AA	33511842	4	33511842	01	-	M6564J00
54001441	T	N	13681974	01	AA	15519825	3	15519825	01	AA	M6564J00
54001441RWC	T	N	15522351	01	AA	13681974	-	-	-	-	-
54001401	T	N	10757692	03	AF	M6565J00	5	-	-	-	-
54001401RWA	T	N	15524503	01	AA	10757692	-	-	-	-	-
54001401RWC	T	N	13969990	01	AA	10757692	-	-	-	-	-
54001301	T	N	10757693	03	AA	M6565J00	5	-	-	-	-
54001301RWA	T	N	15524504	01	AA	10757693	-	-	-	-	-
-	-	N	33400516	01	AA	33511840	7	33511840	01	-	M6564J00
F875200	T	N	15509076	01	AA	15520221	4	15520221	01	AA	M6564J00
54001819	T	N	15425613	02	AA	15519829	2	15519829	01	AA	M6564J00
54001819RWA	T	N	15512733	01	AA	15425613	-	-	-	-	-
54001819RWC	T	N	15513652	01	AA	15425613	-	-	-	-	-
54001818	T	N	15435215	01	AA	15519827	3	15519827	01	AA	M6564J00
54001818RWA	T	N	15516296	01	AA	15435215	-	-	-	-	-
54001818RWC	T	N	13971791	01	AA	15435215	-	-	-	-	-
54001804	T	N	13805590	01	AA	15519824	1	15519824	01	AA	M6564J00
54001804RWA	T	N	15512732	01	AA	13805590	-	-	-	-	-
54001804RWC	T	N	15516297	01	AA	13805590	-	-	-	-	-
54001801	T	N	10762775	03	AF	M6565J00	5	-	-	-	-
54001801RWA	T	N	15516294	01	AA	10762775	-	-	-	-	-
54001801RWC	T	N	13751022	01	AA	10762775	-	-	-	-	-
F975200	T	N	15520916	01	AA	15520917	4	15520917	01	AA	M6564J00
54002230	T	N	33501642	01	AA	33511839	3	33511839	01	-	M6564J00
54002230RWA	T	N	15512731	01	AA	33501642	-	-	-	-	-
54002229	T	N	15520890	01	AA	15520918	2	15520918	01	AA	M6564J00
54002201	T	N	10762776	03	AF	M6565J00	5	-	-	-	-
54002201RWA	T	N	15512725	01	AA	10762776	-	-	-	-	-
54002201RWC	T	N	13969981	01	AA	10762776	-	-	-	-	-

MVL — DELPHI

DWG STATUS DATE	STG	REV	N/P	CHG	ZONE	REVISION HISTORY	AUTH	DR	APVD 1	APVD 2
05FE13	R	01	-			ALL PARTS - REVISED AND REDRAWN IN PDS SYSTEM, ADDED DELPHI PART NUMBERS AND UPDATED MVL CHART	421054	JEG	JAA	DAB
15FE13	R	02				ALL PARTS - ADDED NMCI COLUMN ON MVL CHART AND BLADE THICK TRUE POSITION WAS 0.10	421399	JEG	JAA	DAB
14MR13	R	03	-	-		33400512,15512730,10762774 & 15519823 - DIM "L" WAS 1.00; ALL PARTS - UPDATED MVL PASTE UP DWG TO REV LEVEL "T" DUE TO ORIGINAL PPAP AND ADDED DELPHI FORMAT & CHART; 33511839-44 - RELEASED	421737	JEG	JAA	DAB

TOLERANCE UNLESS OTHERWISE SPECIFIED:
DECIMAL: ANGULAR ±2°
TWO PLACE : SEE DRAWING
THREE PLACE : SEE DRAWING

A LINE DRAWN THROUGH A PART NUMBER INDICATES THAT PHYSICAL PARTS ARE NOT AVAILABLE FOR ORDERING.

PART NUMBERS THAT DO NOT HAVE A LINE PRESENT INDICATE THAT PHYSICAL PARTS ARE AVAILABLE FOR ORDERING.

CONTACT DELPHI SALES TO ASSURE AVAILABILITY OF PARTS.

DWG TYPE: PART DRAWING

STYLE

VOLUME (CM³)

DISTR CODE: D

UNLESS OTHERWISE SPECIFIED

THIS DOCUMENT IS IN ACCORDANCE WITH ASME Y14.5M-1994 AS AMENDED BY THE GM GLOBAL DIMENSIONING AND TOLERANCING ADDENDUM-2001. SEPARATE PATTERNS OF FEATURES MAY BE GAGED SEPARATELY REGARDLESS OF DATUM REFERENCES.

ALL DIMENSIONS ARE IN MILLIMETERS

REFERENCE

THIRD ANGLE PROJECTION — DO NOT SCALE — USE MATH DATA — CAD NX

DELPHI

DELPHI PACKARD ELECTRICAL/ELECTRONIC ARCHITECTURE

WARREN, OH

COPYRIGHT 2013 DELPHI CORPORATION AND/OR ITS AFFILIATES. ALL RIGHTS RESERVED.
REVISED 2013
THIS DRAWING IS THE PROPERTY OF DELPHI CORPORATION AND CONTAINS DELPHI CONFIDENTIAL INFORMATION. THE REPRODUCTION, DISTRIBUTION AND UTILIZATION OF THIS DOCUMENT OR ITS RELATED CAD MATH DATA, AS WELL AS COMMUNICATION OF ANY CONTENT TO OTHERS, WITHOUT EXPRESS AUTHORIZATION, IS PROHIBITED.

		DATE
DR		
APVD1	JAVIER ESQUIVEL	14MR13
APVD2	J.S. ALVARADO	14MR13
APVD3	GERARDO GOMEZ I.	14MR13
APVD4		
APVD5		

SUBSTANCES OF CONCERN AND RECYCLED CONTENT PER DELPHI 10949001

MATERIAL: SEE CHART

DRAWING NAME: TAXI TERM M APEX 2.8

DRAWING NUMBER: 10819199

SIZE	SCALE	FRAME NO	SHEET NO	STG	REV	N/P
A1x3	NONE	1 OF 2	1 OF 1	R	03	-

DRAWING NUMBER 10819199
SIZE A1x3 SCALE NONE FRAME NO 2 OF 2 SHEET NO 1 OF 1 REV R 03

10819199

Общество с ограниченной ответственностью «МосЧип» ИНН 7719860671 / КПП 771901001
Адрес: 105318, г.Москва, ул.Щербаковская д.3, офис 1107

Данный компонент на территории Российской Федерации

Вы можете приобрести в компании MosChip.

Для оперативного оформления запроса Вам необходимо перейти по данной ссылке:

http://moschip.ru/get-element

Вы можете разместить у нас заказ для любого Вашего проекта, будь то серийное производство или разработка единичного прибора.

В нашем ассортименте представлены ведущие мировые производители активных и пассивных электронных компонентов.

Нашей специализацией является поставка электронной компонентной базы двойного назначения, продукции таких производителей как XILINX, Intel (ex.ALTERA), Vicor, Microchip, Texas Instruments, Analog Devices, Mini-Circuits, Amphenol, Glenair.

Сотрудничество с глобальными дистрибьюторами электронных компонентов, предоставляет возможность заказывать и получать с международных складов практически любой перечень компонентов в оптимальные для Вас сроки.

На всех этапах разработки и производства наши партнеры могут получить квалифицированную поддержку опытных инженеров.

Система менеджмента качества компании отвечает требованиям в соответствии с ГОСТ Р ИСО 9001, ГОСТ РВ 0015-002 и ЭС РД 009

Офис по работе с юридическими лицами:

105318, г.Москва, ул.Щербаковская д.3, офис 1107, 1118, ДЦ «Щербаковский»

Телефон: +7 495 668-12-70 (многоканальный)

Факс: +7 495 668-12-70 (доб.304)

E-mail: info@moschip.ru

Skype отдела продаж:
moschip.ru
moschip.ru_4
moschip.ru_6
moschip.ru_9