125 W STEREO DIGITAL AMPLIFIER POWER STAGE

FEATURES

- **Total Power Output (Bridge Tied Load)**
  - **2 × 125 W at 10% THD+N Into 4 Ω**
  - **2 × 100 W at 10% THD+N Into 6 Ω**
- **Total Power Output (Single Ended)**
  - **4 × 45 W at 10% THD+N Into 3 Ω**
  - **4 × 35 W at 10% THD+N Into 4 Ω**
- **Total Power Output (Parallel Mode)**
  - **1 × 250 W at 10% THD+N Into 2 Ω**
  - **1 × 195 W at 10% THD+N Into 3 Ω**
- **>110 dB SNR (A-Weighted With TAS5518 Modulator)**
- **<0.1% THD+N (1 W, 1 kHz)**
- **Supports PWM Frame Rates of 192 kHz to 432 kHz**
- **Resistor-Programmable Current Limit**
- **Integrated Self-Protection Circuitry, Including:**
  - **Under Voltage Protection**
  - **Overtemperature Warning and Error**
  - **Overload Protection**
  - **Short-Circuit Protection**
  - **PWM Activity Detector**
- **Standalone Protection Recovery**
- **Power-On Reset (POR) to Eliminate System Power-Supply Sequencing**
- **High-Efficiency Power Stage (>90%) With 80-mΩ Output MOSFETs**
- **Thermally Enhanced 44-Pin HTSSOP Package (DDV)**
- **Error Reporting, 3.3-V and 5.0-V Compliant**
- **EMI Compliant When Used With Recommended System Design**

APPLICATIONS

- **Mini/Micro Audio System**
- **DVD Receiver**
- **Home Theater**

DESCRIPTION

The TAS5352 is a high-performance, integrated stereo digital amplifier power stage designed to drive a 4-Ω bridge-tied load (BTL) at up to 125 W per channel with low harmonic distortion, low integrated noise, and low idle current.

The TAS5352 has a complete protection system integrated on-chip, safeguarding the device against a wide range of fault conditions that could damage the system. These protection features are short-circuit protection, over-current protection, under voltage protection, over temperature protection, and a loss of PWM signal (PWM activity detector).

A power-on-reset (POR) circuit is used to eliminate power-supply sequencing that is required for most power-stage designs.

BTL OUTPUT POWER vs SUPPLY VOLTAGE

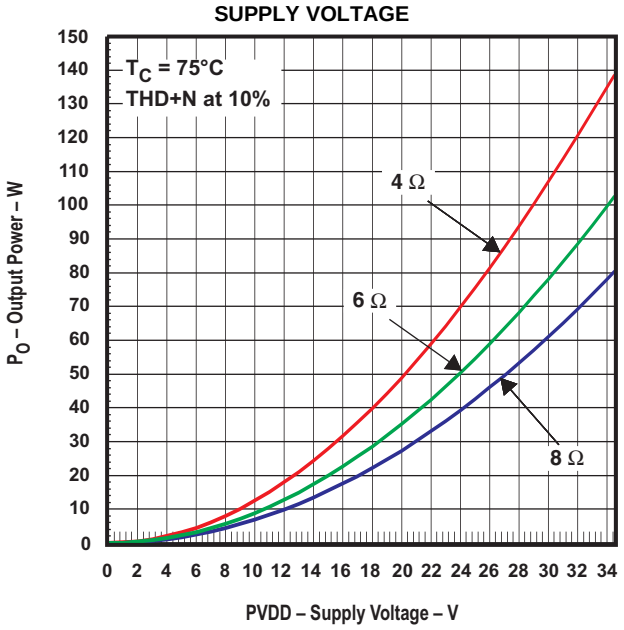

Please be aware that an important notice concerning availability, standard warranty, and use in critical applications of Texas Instruments semiconductor products and disclaimers thereto appears at the end of this data sheet.

PurePath Digital, PowerPad are trademarks of Texas Instruments.
All other trademarks are the property of their respective owners.

PRODUCTION DATA information is current as of publication date. Products conform to specifications per the terms of the Texas Instruments standard warranty. Production processing does not necessarily include testing of all parameters.

Copyright © 2007, Texas Instruments Incorporated

These devices have limited built-in ESD protection. The leads should be shorted together or the device placed in conductive foam during storage or handling to prevent electrostatic damage to the MOS gates.

GENERAL INFORMATION

Terminal Assignment

The TAS5352 is available in a thermally enhanced 44-pin HTSSOP PowerPad™ package (DDV)

This package contains a thermal pad that is located on the top side of the device for convenient thermal coupling to the heatsink.

DDV PACKAGE
(TOP VIEW)

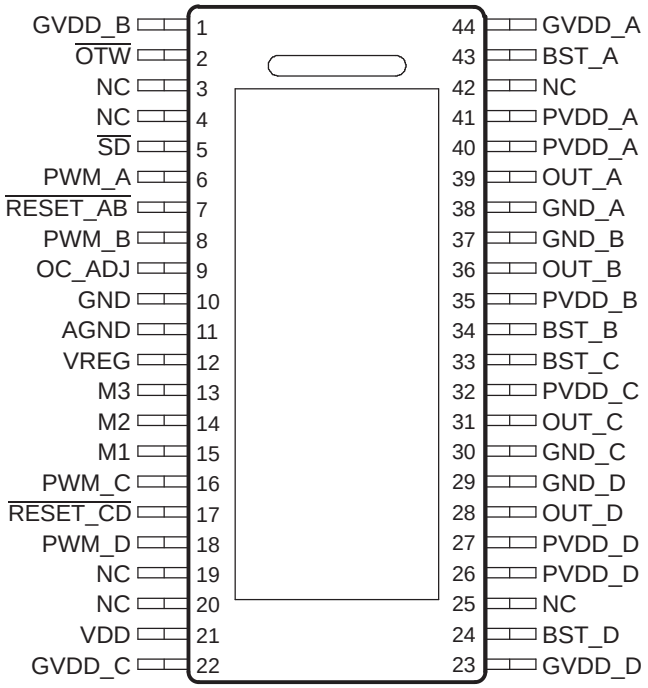

Copyright © 2007, Texas Instruments Incorporated

Protection MODE Selection Pins

Protection modes are selected by shorting M1, M2, and M3 to VREG or GND.

MODE PINS			Mode Name	PWM Input[1]	Description
M3	M2	M1			
0	0	0	BTL mode 1	2N	All protection systems enabled
0	0	1	BTL mode 2	2N	Latching shudown on, PWM activity detector and OLP disabled
0	1	0	BTL mode 3	1N	All protection systems enabled
0	1	1	PBTL mode	1N / 2N [2]	All protection systems enabled
1	0	0	SE mode 1	1N	All protection systems enabled[3]
1	0	1	SE mode 2	1N	Latching shudown on, PWM activity detector and OLP disabled[3]
1	1	0	Reserved		
	1	1			1

(1) The 1N and 2N naming convention is used to indicate the number of PWM lines to the power stage per channel in a specific mode.
(2) PWM_D is used to select between the 1N and 2N interface in PBTL mode (Low = 1N; High = 2N). PWM_D is internally pulled low in PBTL mode. PWM_A is used as the PWM input in 1N mode and PWM_A and PWM_B are used as inputs for the 2N mode.
(3) PPSC detection system disabled.

Package Heat Dissipation Ratings[1]

PARAMETER	TAS5352DDV
$R_{\theta JC}$ (°C/W)—2 BTL or 4 SE channels	1.3
$R_{\theta JC}$ (°C/W)—1 BTL or 2 SE channel(s)	2.6
$R_{\theta JC}$ (°C/W)—1 SE channel	5.0
Power Pad area[2]	36 mm^2

(1) JC is junction-to-case, CH is case-to-heatsink.
(2) $R_{\theta CH}$ is an important consideration. Assume a 2-mil thickness of high performance grease with a thermal conductivity at 2.5W/m-K between the pad area and the heat sink. The $R_{\theta CH}$ with this condition is 0.6°C/W for the DDV package.

Copyright © 2007, Texas Instruments Incorporated

ABSOLUTE MAXIMUM RATINGS

over operating free-air temperature range unless otherwise noted (1)

TAS5352	
VDD to AGND	–0.3 V to 13.2 V
GVDD_X to AGND	–0.3 V to 13.2 V
PVDD_X to GND_X (2)	–0.3 V to 53 V
OUT_X to GND_X (2)	–0.3 V to 53 V
BST_X to GND_X (2)	–0.3 V to 66.2 V
BST_X to GVDD_X (2)	–0.3 V to 53 V
VREG to AGND	–0.3 V to 4.2 V
GND_X to GND	–0.3 V to 0.3 V
GND_X to AGND	–0.3 V to 0.3 V
GND to AGND	–0.3 V to 0.3 V
PWM_X, OC_ADJ, M1, M2, M3 to AGND	–0.3 V to 4.2 V
$\overline{\text{RESET_X}}$, $\overline{\text{SD}}$, $\overline{\text{OTW}}$ to AGND	–0.3 V to 7 V
Maximum continuous sink current ($\overline{\text{SD}}$, $\overline{\text{OTW}}$)	9 mA
Maximum operating junction temperature range, T_J	0°C to 125°C
Storage temperature	–40°C to 125°C
Lead temperature, 1,6 mm (1/16 inch) from case for 10 seconds	260°C
Minimum pulse duration, low	30 ns

(1) Stresses beyond those listed under "absolute maximum ratings" may cause permanent damage to the device. These are stress ratings only, and functional operation of the device at these or any other conditions beyond those indicated under "recommended operating conditions" is not implied. Exposure to absolute-maximum-rated conditions for extended periods may affect device reliability.
(2) These voltages represent the dc voltage + peak ac waveform measured at the terminal of the device in all conditions.

ORDERING INFORMATION(1)

T_A	PACKAGE	DESCRIPTION
0°C to 70°C	TAS5352DDV	44-pin HTSSOP

(1) For the most current package and ordering information, see the Package Option Addendum at the end of this document, or see the TI website at www.ti.com.

Copyright © 2007, Texas Instruments Incorporated

Terminal Functions

TERMINAL		FUNCTION (1)	DESCRIPTION
NAME	DDV NO.		
AGND	11	P	Analog ground
BST_A	43	P	Bootstrap pin, A-Side
BST_B	34	P	Bootstrap pin, B-Side
BST_C	33	P	Bootstrap pin, C-Side
BST_D	24	P	Bootstrap pin, D-Side
GND	10	P	Ground
GND_A	38	P	Power ground for half-bridge A
GND_B	37	P	Power ground for half-bridge B
GND_C	30	P	Power ground for half-bridge C
GND_D	29	P	Power ground for half-bridge D
GVDD_A	44	P	Gate-drive voltage supply; A-Side
GVDD_B	1	P	Gate-drive voltage supply; B-Side
GVDD_C	22	P	Gate-drive voltage supply; C-Side
GVDD_D	23	P	Gate-drive voltage supply; D-Side
M1	15	I	Mode selection pin (LSB)
M2	14	I	Mode selection pin
M3	13	I	Mode selection pin (MSB)
NC	3, 4, 19, 20, 25, 42	–	No connect. Pins may be grounded.
OC_ADJ	9	O	Analog overcurrent programming pin
$\overline{\text{OTW}}$	2	O	Overtemperature warning signal, open-drain, active-low
OUT_A	39	O	Output, half-bridge A
OUT_B	36	O	Output, half-bridge B
OUT_C	31	O	Output, half-bridge C
OUT_D	28	O	Output, half-bridge D
PVDD_A	40, 41	P	Power supply input for half-bridge A
PVDD_B	35	P	Power supply input for half-bridge B
PVDD_C	32	P	Power supply input for half-bridge C
PVDD_D	26, 27	P	Power supply input for half-bridge D
PWM_A	6	I	PWM Input signal for half-bridge A
PWM_B	8	I	PWM Input signal for half-bridge B
PWM_C	16	I	PWM Input signal for half-bridge C
PWM_D	18	I	PWM Input signal for half-bridge D
$\overline{\text{RESET_AB}}$	7	I	Reset signal for half-bridge A and half-bridge B, active-low
$\overline{\text{RESET_CD}}$	17	I	Reset signal for half-bridge C and half-bridge D, active-low
$\overline{\text{SD}}$	5	O	Shutdown signal, open-drain, active-low
VDD	21	P	Input power supply
VREG	12	P	Internal voltage regulator

(1) I = input, O = output, P = power

Copyright © 2007, Texas Instruments Incorporated

TYPICAL SYSTEM BLOCK DIAGRAM

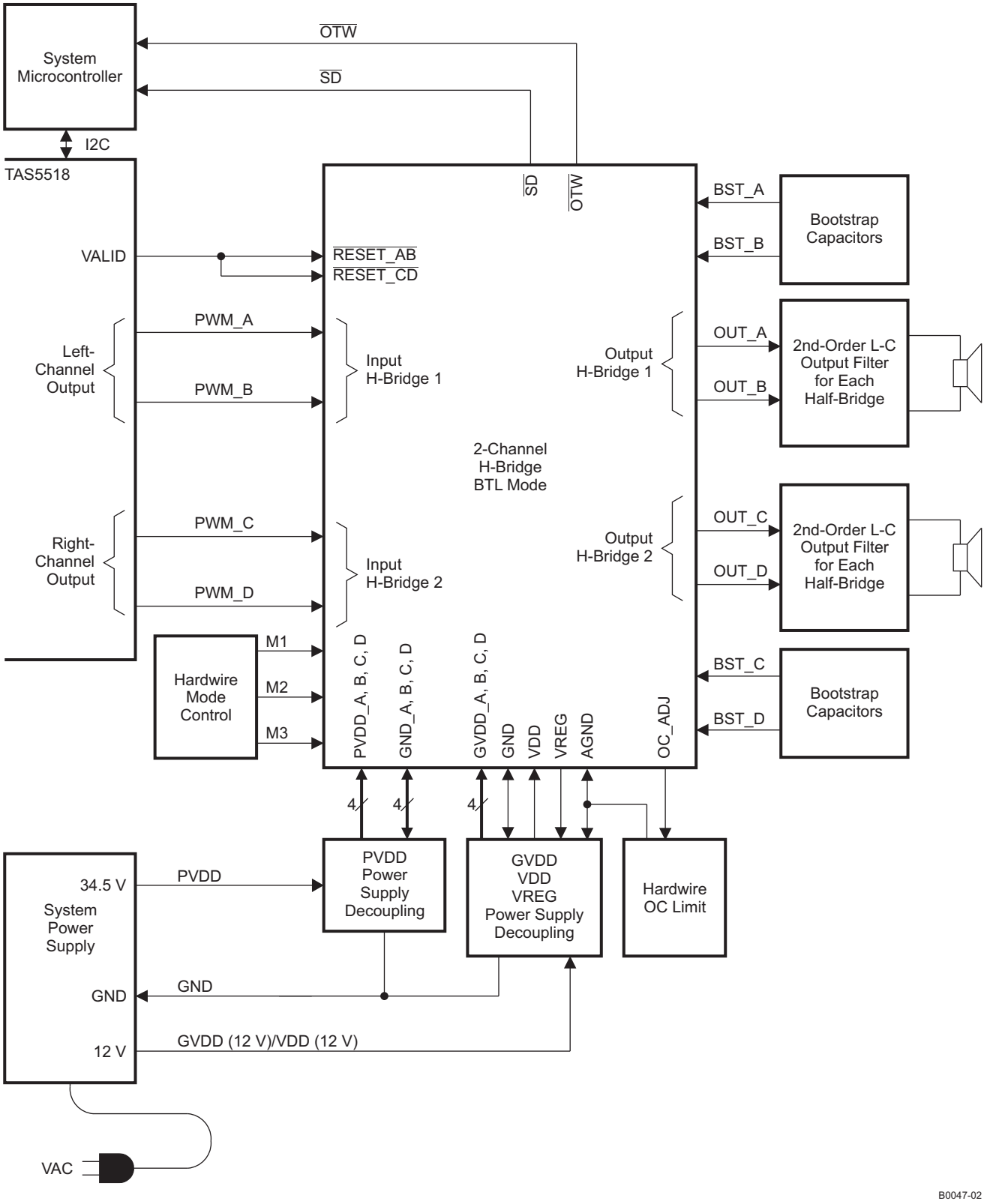

Copyright © 2007, Texas Instruments Incorporated

FUNCTIONAL BLOCK DIAGRAM

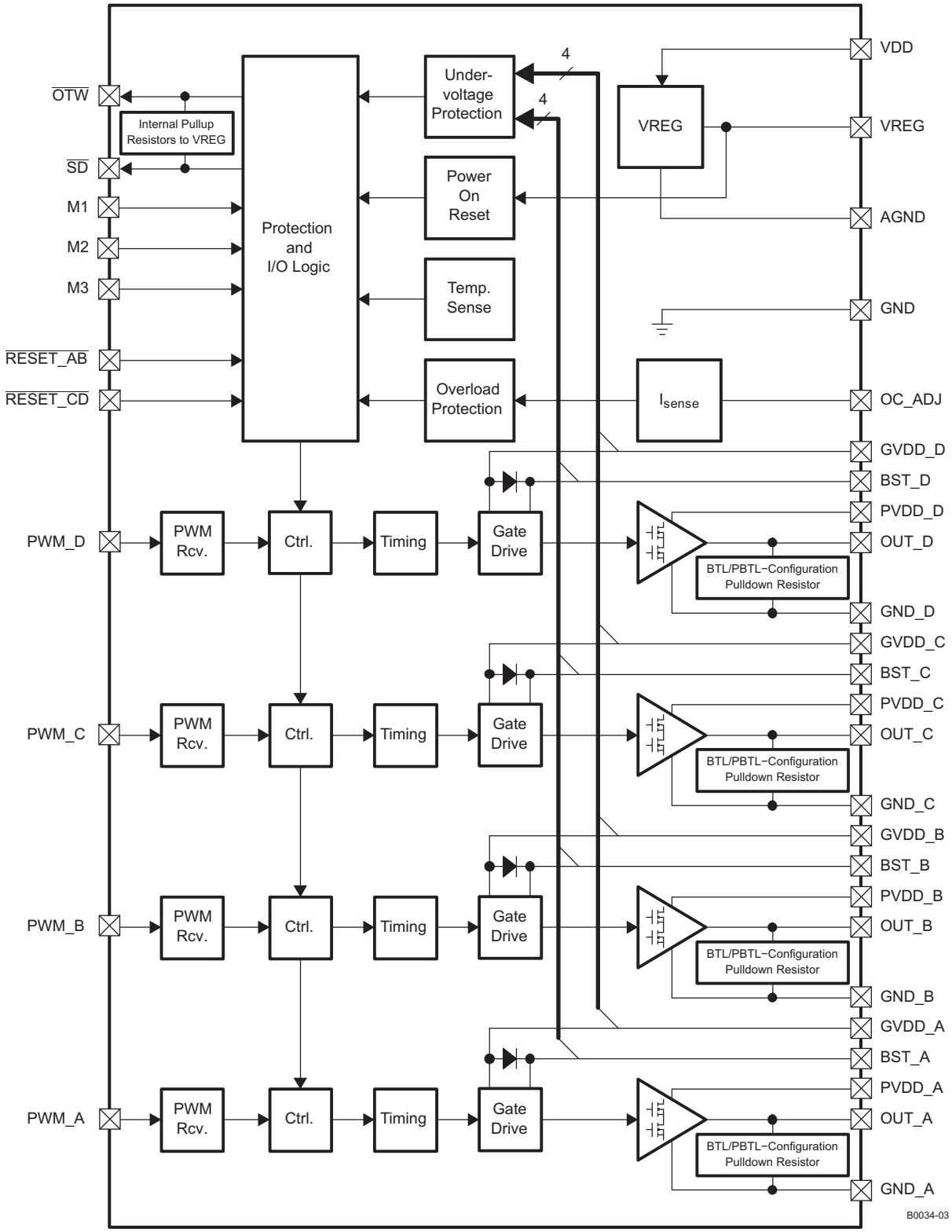

RECOMMENDED OPERATING CONDITIONS

			MIN	TYP	MAX	UNIT
PVDD_X	Half-bridge supply voltage		0	34.5	37	V
GVDD_X	Supply voltage for logic regulators and gate-drive circuitry		10.8	12	13.2	V
VDD	Digital regulator supply voltage		10.8	12	13.2	V
R_L (BTL)	Resistive load impedance (no Cycle-by_Cycle current control), recommended demodulation filter		3	4		Ω
R_L (SE)			2.25	3		
R_L (PBTL)			1.5	2		
L_{Output} (BTL)	Output-filter inductance	Minimum output inductance under short-circuit condition	5	10		µH
L_{Output} (SE)			5	10		
L_{Output} (PBTL)			5	10		
f_S	PWM frame rate		192	384	432	kHz
t_{LOW}	Minimum low-state pulse duration per PWM Frame, noise shaper enabled		30			nS
C_{PVDD}	PVDD close decoupling capacitors			0.1		µF
C_{BST}	Bootstrap capacitor, selected value supports PWM frame rates from 192 kHz to 432 kHz			33		nF
R_{OC}	Over-current programming resistor	Resistor tolerance = 5%	22	22	47	kΩ
$R_{EXT-PULLUP}$	External pull-up resistor to +3.3V to +5.0V for $\overline{SD}$ or $\overline{OTW}$		3.3	4.7		kΩ
T_J	Junction temperature		0		125	°C

AUDIO SPECIFICATIONS (BTL)

Audio performance is recorded as a chipset consisting of a TAS5518 pwm processor (modulation index limited to 97.7%) and a TAS5352 power stage. PCB and system configuraton are in accordance with recommended guidelines. Audio frequency = 1kHz, PVDD_x = 34.5 V, GVDD_x = 12 V, R_L = 4Ω, f_S = 384 kHz, R_{OC} = 22 kΩ, T_C = 75°C, Output Filter: L_{DEM} = 10 µH, C_{DEM} = 470 nF, unless otherwise noted.

PARAMETER		TEST CONDITIONS	TAS5352			UNIT
			MIN	TYP	MAX	
P_{OMAX}	Maximum Power Output	R_L = 4 Ω, 10% THD+N, clipped input signal		125		W
		R_L = 6 Ω, 10% THD+N, clipped input signal		100		
		R_L = 8 Ω, 10% THD+N, clipped input signal		76		
P_O	Unclipped Power Output	R_L = 4 Ω, 0 dBFS, unclipped input signal		96		
		R_L = 6 Ω, 0 dBFS, unclipped input signal		72		
		R_L = 8 Ω, 0 dBFS, unclipped input signal		57		
THD+N	Total harmonic distortion + noise	0 dBFS; AES17 filter		0.2%		
		1 W; AES17 filter		0.09%		
V_n	Output integrated noise	A-weighted, AES17 filter, Auto mute disabled		50		µV
SNR	Signal-to-noise ratio (1)	A-weighted, AES17 filter, Auto mute disabled		110		dB
DNR	Dynamic range	A-weighted, input level = –60 dBFS, AES17 filter		110		dB
DC Offset	Output offset voltage			+/- 15		mV
P_{idle}	Power dissipation due to idle losses (IPVDD_X)	P_O = 0 W, all halfbridges switching (2)		2		W

(1) SNR is calculated relative to 0-dBFS input level.
(2) Actual system idle losses are affected by core losses of output inductors.

Copyright © 2007, Texas Instruments Incorporated

AUDIO SPECIFICATIONS (Single-Ended Output)

Audio performance is recorded as a chipset consisting of a TAS5086 pwm processor (modulation index limited to 97.7%) and a TAS5352 power stage. PCB and system configuraton are in accordance with recommended guidelines. Audio frequency = 1kHz, PVDD_x = 34.5 V, GVDD_x = 12 V, R_L = 4Ω, f_S = 384 kHz, R_{OC} = 22 kΩ, T_C = 75°C, Output Filter: L_{DEM} = 20 µH, C_{DEM} = 1.0 µF, unless otherwise noted.

PARAMETER		TEST CONDITIONS	TAS5352			UNIT
			MIN	TYP	MAX	
P_{OMAX}	Maximum Power Output	R_L = 3 Ω, 10% THD+N, clipped input signal		45		W
		R_L = 4 Ω, 10% THD+N, clipped input signal		35		
P_O	Unclipped Power Output	R_L = 3 Ω, 0 dBFS, unclipped input signal		35		
		R_L = 4 Ω, 0 dBFS, unclipped input signal		25		
THD+N	Total harmonic distortion + noise	0 dBFS; AES17 filter		0.2%		
		1 W; AES17 filter		0.09%		
V_n	Output integrated noise	A-weighted, AES17 filter, Auto mute disabled		40		µV
SNR	Signal-to-noise ratio (1)	A-weighted, AES17 filter, Auto mute disabled		109		dB
DNR	Dynamic range	A-weighted, input level = –60 dBFS AES17 filter		109		dB
P_{idle}	Power dissipation due to idle losses (IPVDD_X)	P_O = 0 W, all halfbridges switching (2)		2		W

(1) SNR is calculated relative to 0-dBFS input level.
(2) Actual system idle losses are affected by core losses of output inductors.

AUDIO SPECIFICATIONS (PBTL)

Audio performance is recorded as a chipset consisting of a TAS5518 pwm processor (modulation index limited to 97.7%) and a TAS5352 power stage. PCB and system configuraton are in accordance with recommended guidelines. Audio frequency = 1kHz, PVDD_x = 34.5 V, GVDD_x = 12 V, R_L = 3Ω, f_S = 384 kHz, R_{OC} = 22 kΩ, T_C = 75°C, Output Filter: L_{DEM} = 10 µH, C_{DEM} = 1 uF, unless otherwise noted.

PARAMETER		TEST CONDITIONS	TAS5352			UNIT
			MIN	TYP	MAX	
P_{OMAX}	Maximum Power Output	R_L = 3 Ω, 10% THD+N, clipped input signal		195		W
		R_L = 2 Ω, 10% THD+N, clipped input signal		250		
P_O	Unclipped Power Output	R_L = 3 Ω, 0 dBFS, unclipped input signal		145		
		R_L = 2 Ω, 0 dBFS, unclipped input signal		190		
THD+N	Total harmonic distortion + noise	0 dBFS; AES17 filter		0.2%		
		1 W; AES17 filter		0.09%		
V_n	Output integrated noise	A-weighted, AES17 filter, Auto mute disabled		50		µV
SNR	Signal-to-noise ratio (1)	A-weighted, AES17 filter, Auto mute disabled		110		dB
DNR	Dynamic range	A-weighted, input level = –60 dBFS AES17 filter		110		dB
DC Offset	Output offset voltage			+/- 15		mV
P_{idle}	Power dissipation due to idle losses (IPVDD_X)	P_O = 0 W, all halfbridges switching (2)		2		W

(1) SNR is calculated relative to 0-dBFS input level.
(2) Actual system idle losses are affected by core losses of output inductors.

Copyright © 2007, Texas Instruments Incorporated

ELECTRICAL CHARACTERISTICS

PVDD_x = 34.5 V, GVDD_X = 12 V, VDD = 12 V, T_C (Case temperature) = 75°C, f_S = 384 kHz, unless otherwise specified.

PARAMETER		TEST CONDITIONS	TAS5352			UNIT
			MIN	TYP	MAX	
Internal Voltage Regulator and Current Consumption						
VREG	Voltage regulator, only used as a reference node	VDD = 12 V	3	3.3	3.6	V
IVDD	VDD supply current	Operating, 50% duty cycle		7.2	17	mA
		Idle, reset mode		5.5	11	
IGVDD_X	Gate supply current per half-bridge	50% duty cycle		8	16	mA
		Reset mode		1	1.8	
IPVDD_X	Half-bridge idle current	50% duty cycle, without output filter or load		13.6	25	mA
		Reset mode, no switching		525	630	µA
Output Stage MOSFETs						
$R_{DSon,LS}$	Drain-to-source resistance, Low Side	T_J = 25°C, excludes metallization resistance,		80	89	mΩ
$R_{DSon,HS}$	Drain-to-source resistance, High Side	T_J = 25°C, excludes metallization resistance,		80	89	mΩ
I/O Protection						
$V_{uvp,G}$	Undervoltage protection limit, GVDD_X			9.5		V
$V_{uvp,hyst}$ (1)	Undervoltage protection limit, GVDD_X			250		mV
BST_{uvpF}	Puts device into RESET when BST voltage falls below limit			5.9		V
BST_{uvpR}	Brings device out of RESET when BST voltage rises above limit			7		V
OTW (1)	Overtemperature warning		115	125	135	°C
OTW_{HYST} (1)	Temperature drop needed below OTW temp. for $\overline{OTW}$ to be inactive after the $\overline{OTW}$ event			25		°C
OTE (1)	Overtemperature error threshold		145	155	165	°C
OTE-$OTW_{differential}$ (1)	$\overline{OTE}$ - $\overline{OTW}$ differential, temperature delta between $\overline{OTW}$ and $\overline{OTE}$			30		°C
OLPC	Overload protection counter	f_S = 384 kHz		1.25		ms
I_{OC}	Overcurrent limit protection	Resistor—programmable, high-end, R_{OC} = 22 kΩ with 1 mS pulse		10.9		A
I_{OCT}	Overcurrent response time			150		ns
$t_{ACTIVITY\ DETECTOR}$	Time for PWM activity detector to activite when no PWM is present	Lack of transistion of any PWM input		13.2		µS
I_{PD}	Output pulldown current of each half-bridge	Connected when $\overline{RESET}$ is active to provide bootstrap capacitor charge. Not used in SE mode.		3		mA
Static Digital Specifications						
V_{IH}	High-level input voltage	PWM_A, PWM_B, PWM_C, PWM_D, M1, M2, M3, RESET_AB, RESET_CD	2			V
V_{IL}	Low-level input voltage				0.8	V
$I_{Leakage}$	Input leakage current				100	µA
OTW/SHUTDOWN (SD)						
R_{INT_PU}	Internal pullup resistance, $\overline{OTW}$ to VREG, $\overline{SD}$ to VREG		20	26	32	kΩ
V_{OH}	High-level output voltage	Internal pullup resistor	3	3.3	3.6	V
		External pullup of 4.7 kΩ to 5 V	4.5		5	
V_{OL}	Low-level output voltage	I_O = 4 mA		0.2	0.4	V

(1) Specified by design

Copyright © 2007, Texas Instruments Incorporated

ELECTRICAL CHARACTERISTICS (continued)

PVDD_x = 34.5 V, GVDD_X = 12 V, VDD = 12 V, T_C (Case temperature) = 75°C, f_S = 384 kHz, unless otherwise specified.

PARAMETER		TEST CONDITIONS	TAS5352			UNIT
			MIN	TYP	MAX	
FANOUT	Device fanout $\overline{OTW}$, $\overline{SD}$	No external pullup		30		Devices

TYPICAL CHARACTERISTICS, BTL CONFIGURATION

TOTAL HARMONIC DISTORTION + NOISE vs OUTPUT POWER

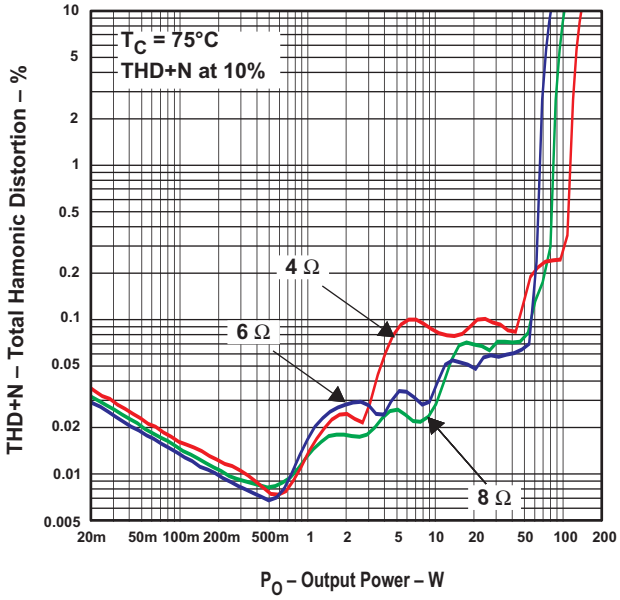

Figure 1.

OUTPUT POWER vs SUPPLY VOLTAGE

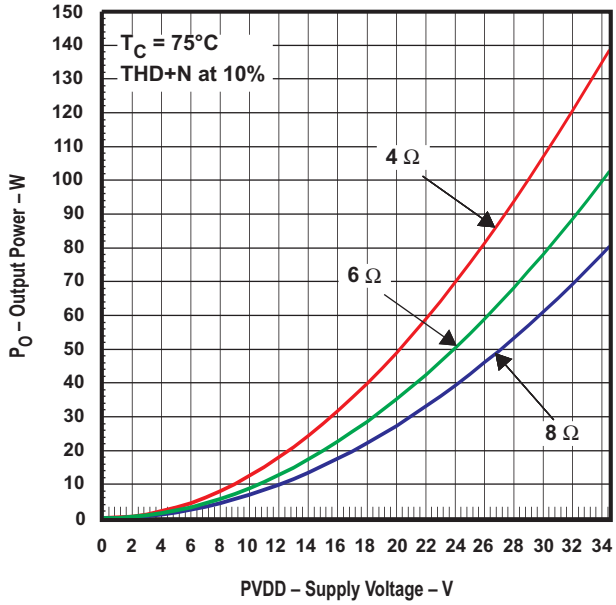

Figure 2.

UNCLIPPED OUTPUT POWER vs SUPPLY VOLTAGE

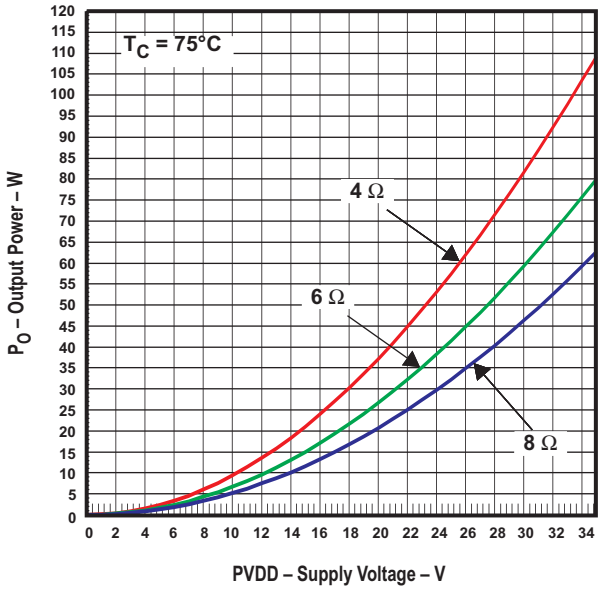

Figure 3.

SYSTEM EFFICIENCY vs OUTPUT POWER

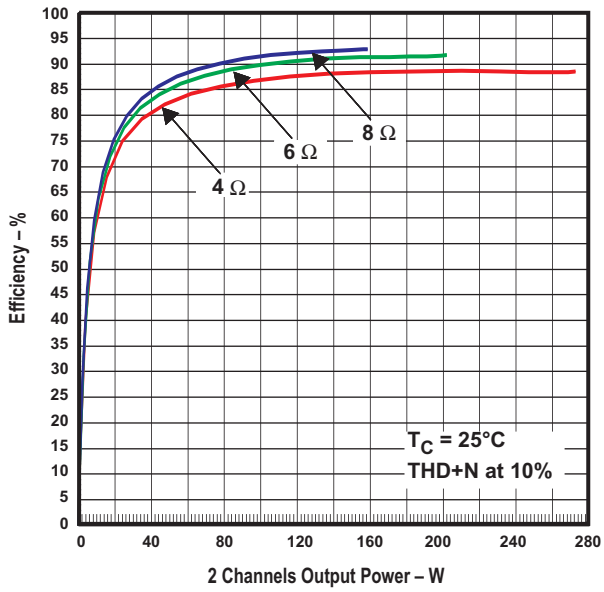

Figure 4.

TYPICAL CHARACTERISTICS, BTL CONFIGURATION (continued)

SYSTEM POWER LOSS vs OUTPUT POWER

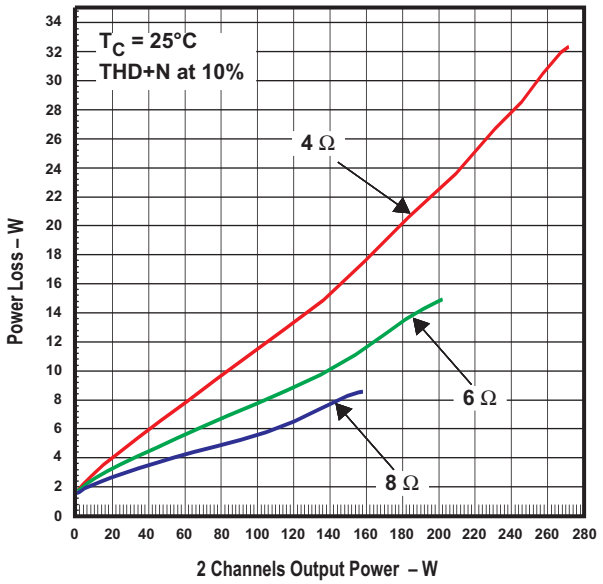

Figure 5.

SYSTEM OUTPUT POWER vs CASE TEMPERATURE

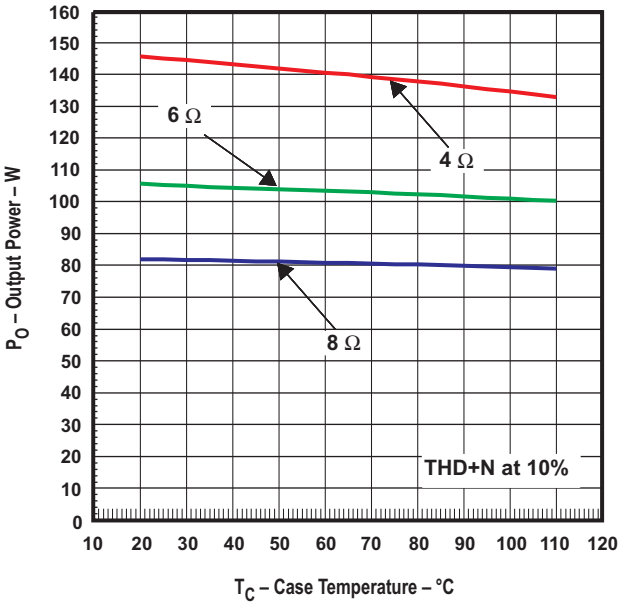

Figure 6.

NOISE AMPLITUDE vs FREQUENCY

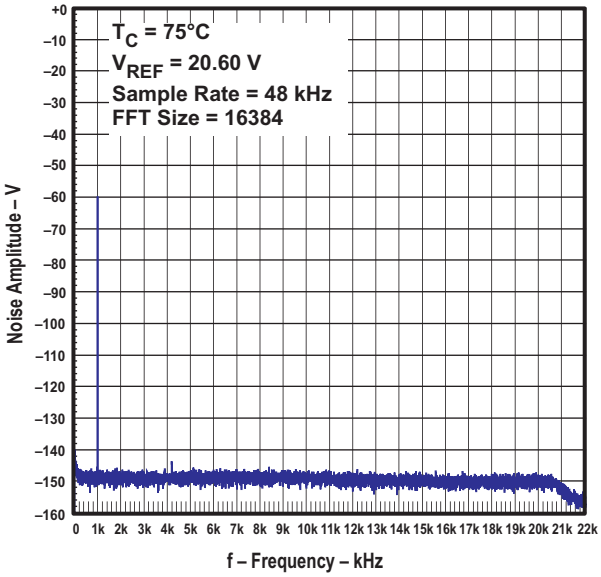

Figure 7.

Copyright © 2007, Texas Instruments Incorporated

TYPICAL CHARACTERISTICS, SE CONFIGURATION

TOTAL HARMONIC DISTORTION + NOISE vs OUTPUT POWER

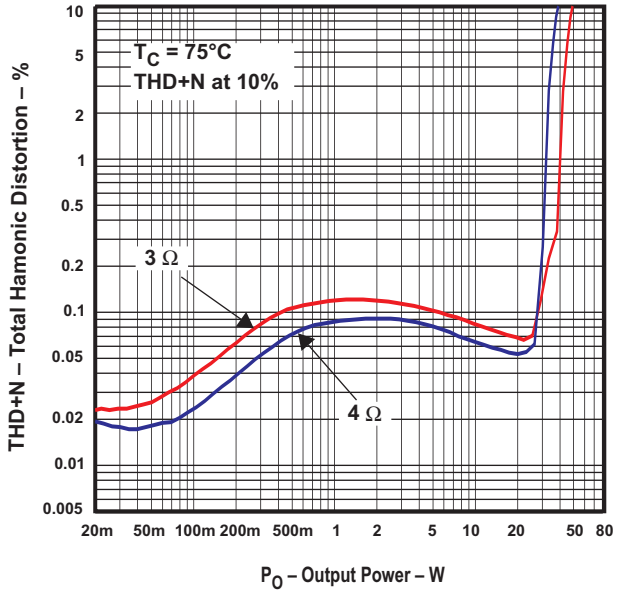

Figure 8.

OUTPUT POWER vs SUPPLY VOLTAGE

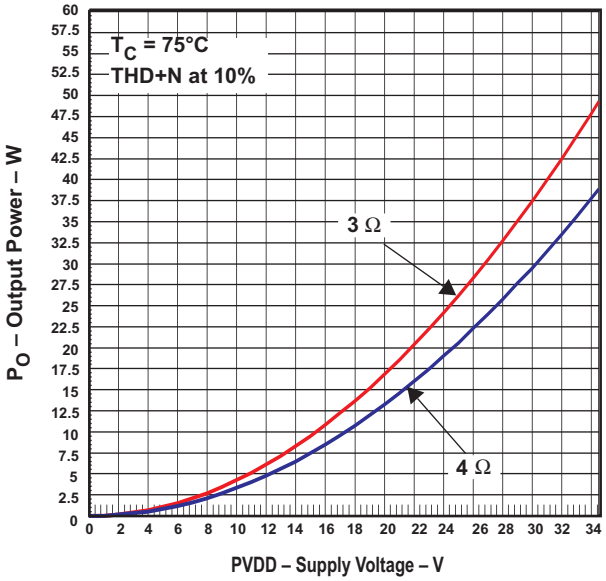

Figure 9.

OUTPUT POWER vs CASE TEMPERATURE

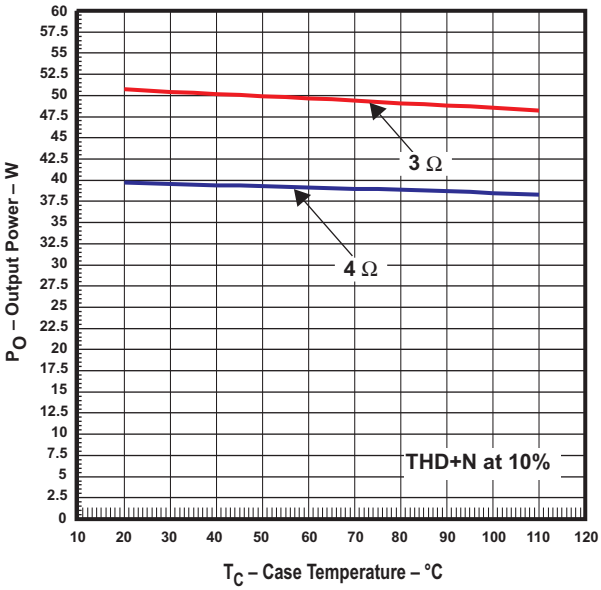

Figure 10.

TYPICAL CHARACTERISTICS, PBTL CONFIGURATION

TOTAL HARMONIC DISTORTION + NOISE vs OUTPUT POWER

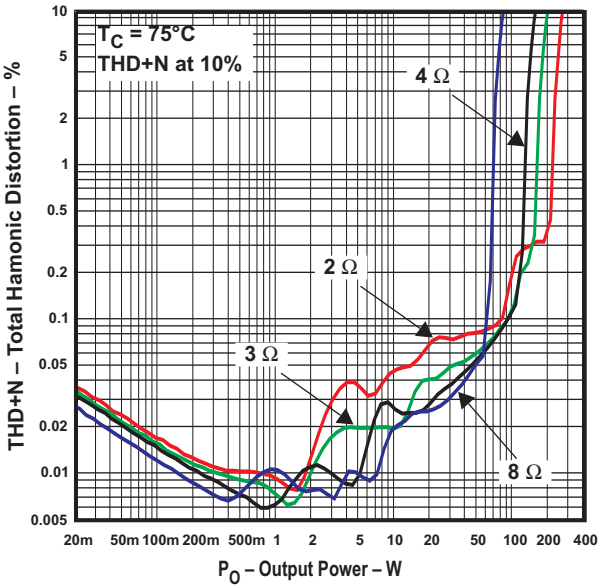

Figure 11.

OUTPUT POWER vs SUPPLY VOLTAGE

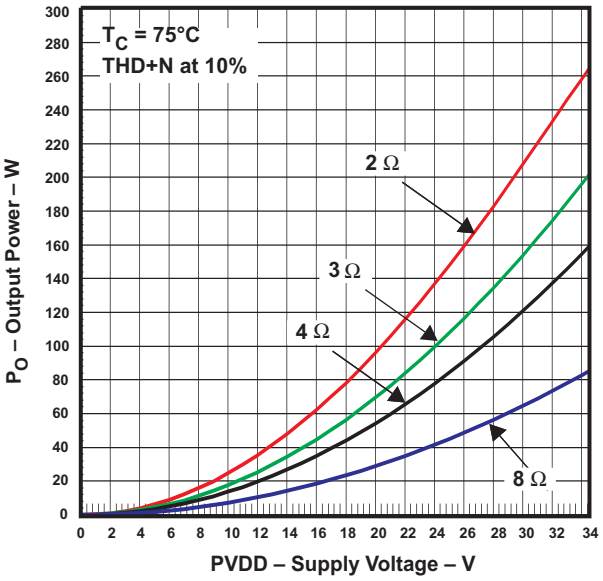

Figure 12.

SYSTEM OUTPUT POWER vs CASE TEMPERATURE

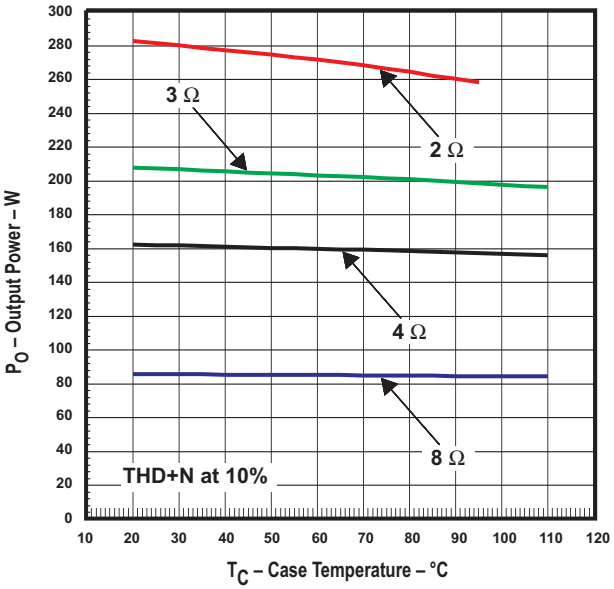

Figure 13.

Copyright © 2007, Texas Instruments Incorporated

APPLICATION INFORMATION

PCB Material Recommendation

FR-4 Glass Epoxy material with 2 oz. (70 µm) is recommended for use with the TAS5352. The use of this material can provide for higher power output, improved thermal performance, and better EMI margin (due to lower PCB trace inductance.

PVDD Capacitor Recommendation

The large capacitors used in conjunction with each full-birdge, are referred to as the PVDD Capacitors. These capacitors should be selected for proper voltage margin and adequate capacitance to support the power requirements. In practice, with a well designed system power supply, 1000 µF, 50-V will support more applications. The PVDD capacitors should be low ESR type because they are used in a circuit associtated with high-speed switching.

Decoupling Capacitor Recommendations

In order to design an amplifier that has robust performance, passes regulatory requirements, and exhibits good audio performance, good quality decoupling capacitors should be used. In practice, X7R should be used in this application.

The voltage of the decoupling capactors should be selected in accordance with good design practices. Temperature, ripple current, and voltage overshoot must be considered. This fact is particularly true in the selection of the 0.1µF that is placed on the power supply to each half-bridge. It must withstand the voltage overshoot of the PWM switching, the heat generated by the amplifier during high power output, and the ripple current created by high power power output. A minimum voltage rating of 50-V is required for use with a 34.5 V power supply.

System Design Recommendations

The following schematics and PCB layouts illustrate "best practices" in the use of the TAS5352.

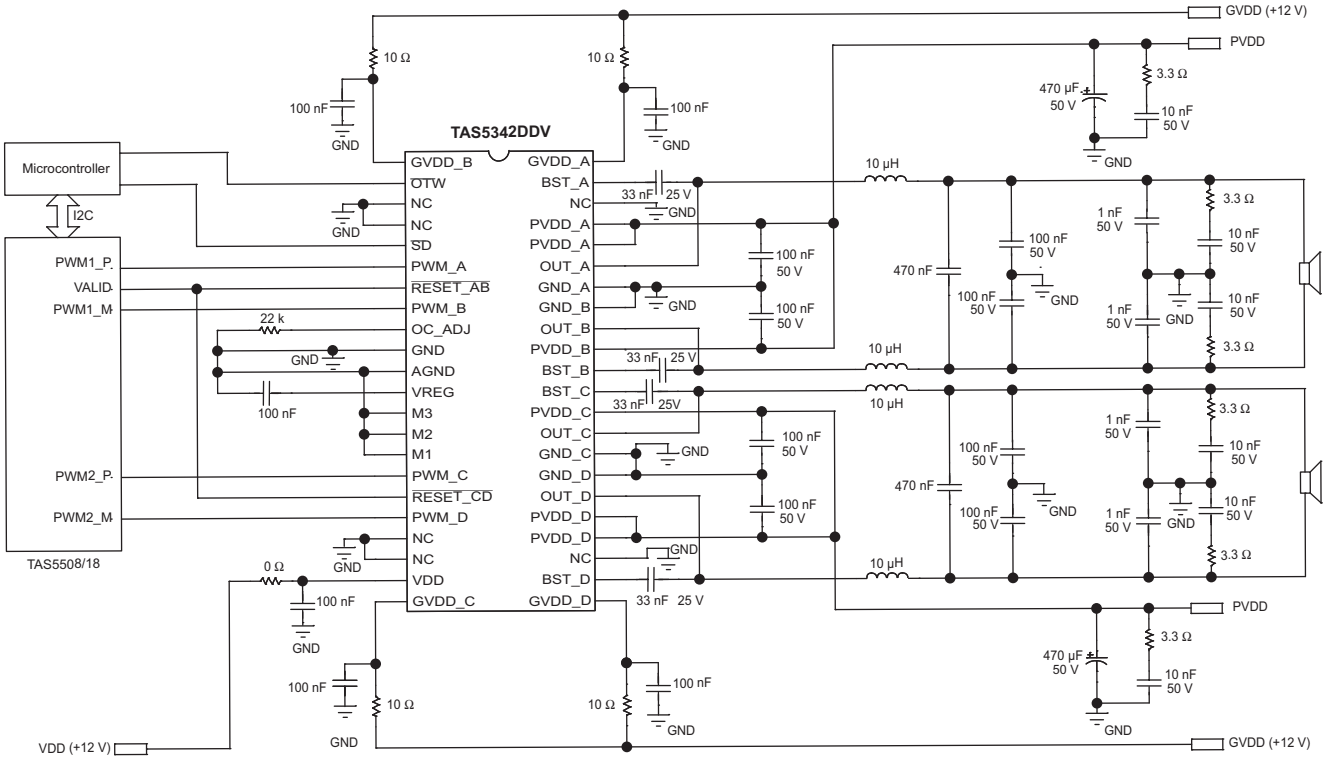

Figure 14. Typical Differential (2N) BTL Application With AD Modulation Filters

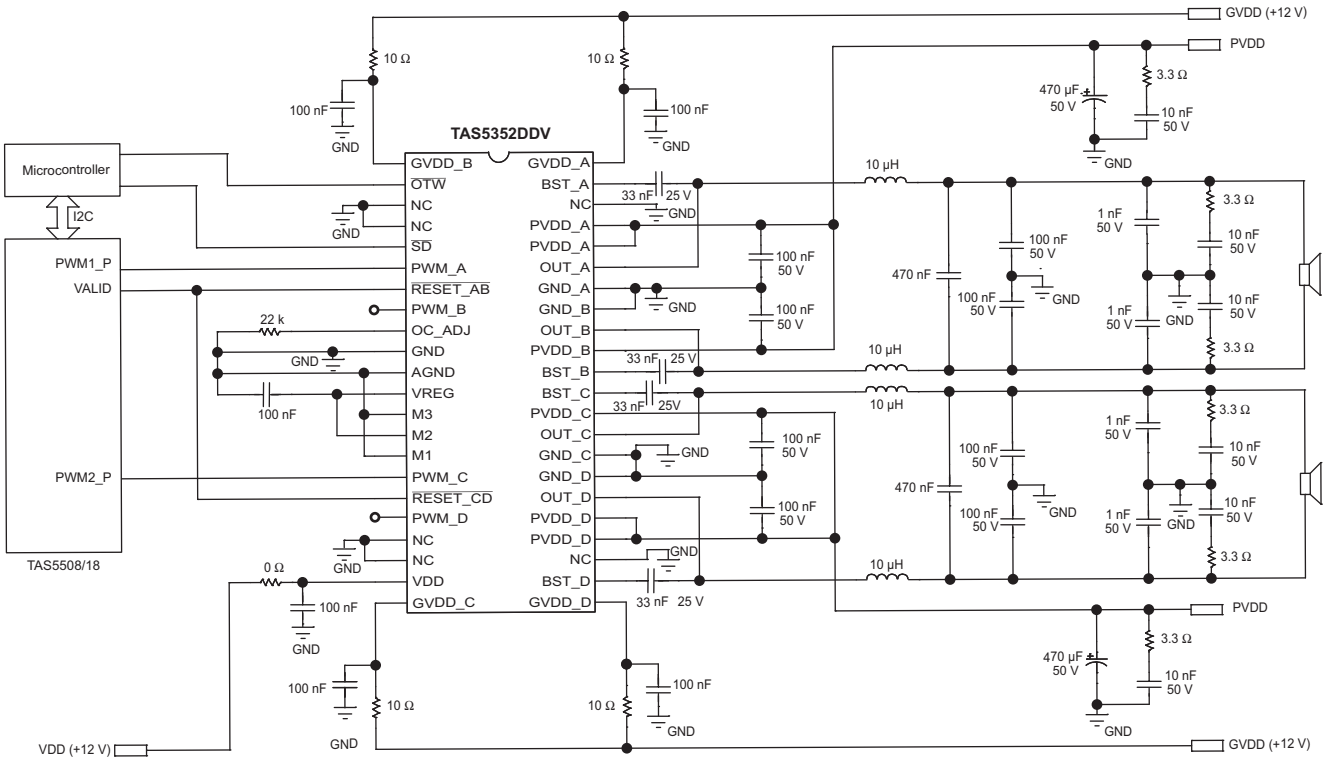

Figure 15. Typical Non-Differential (1N) BTL Application With AD Modulation Filters

Copyright © 2007, Texas Instruments Incorporated

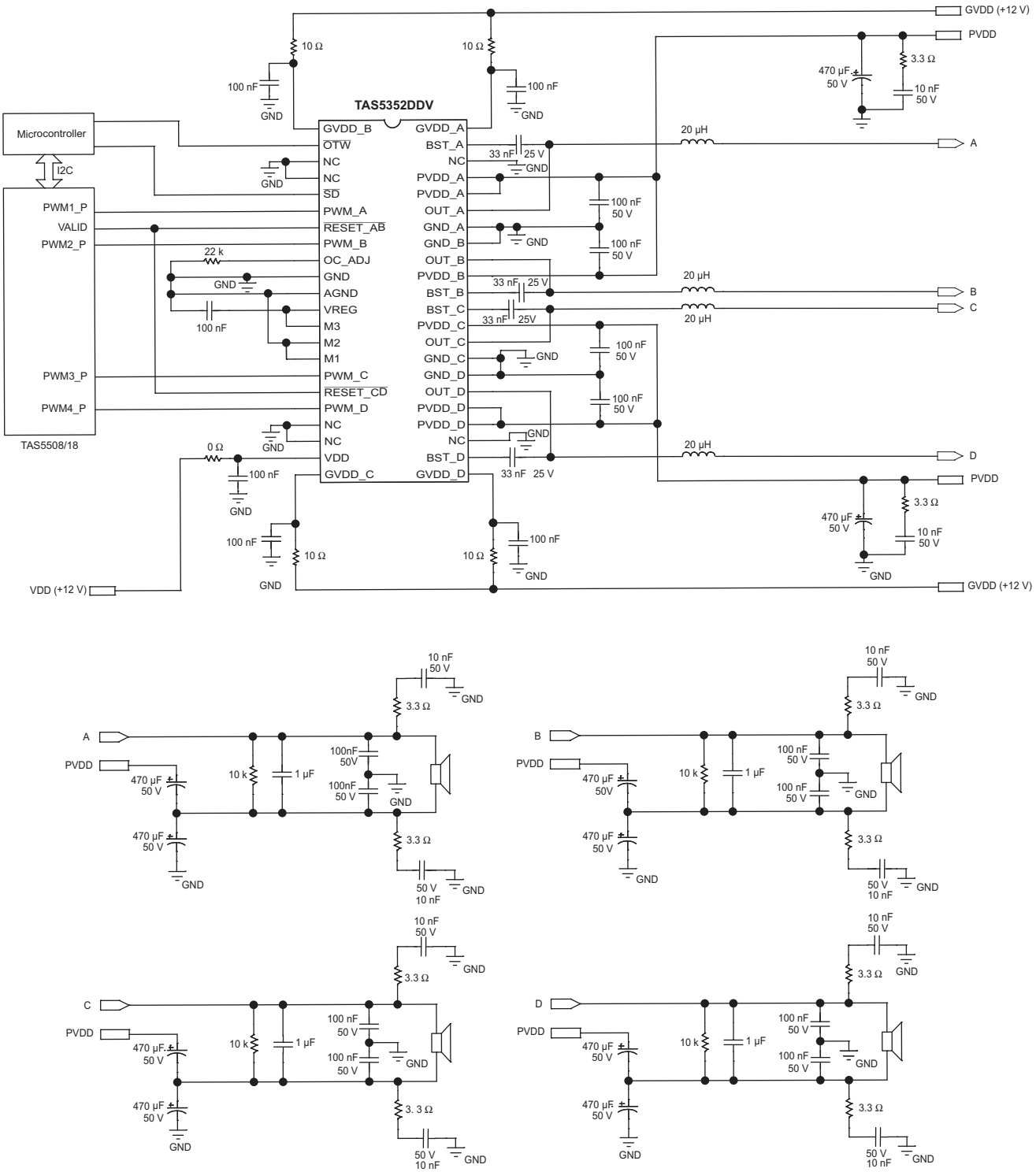

Figure 16. Typical SE Application

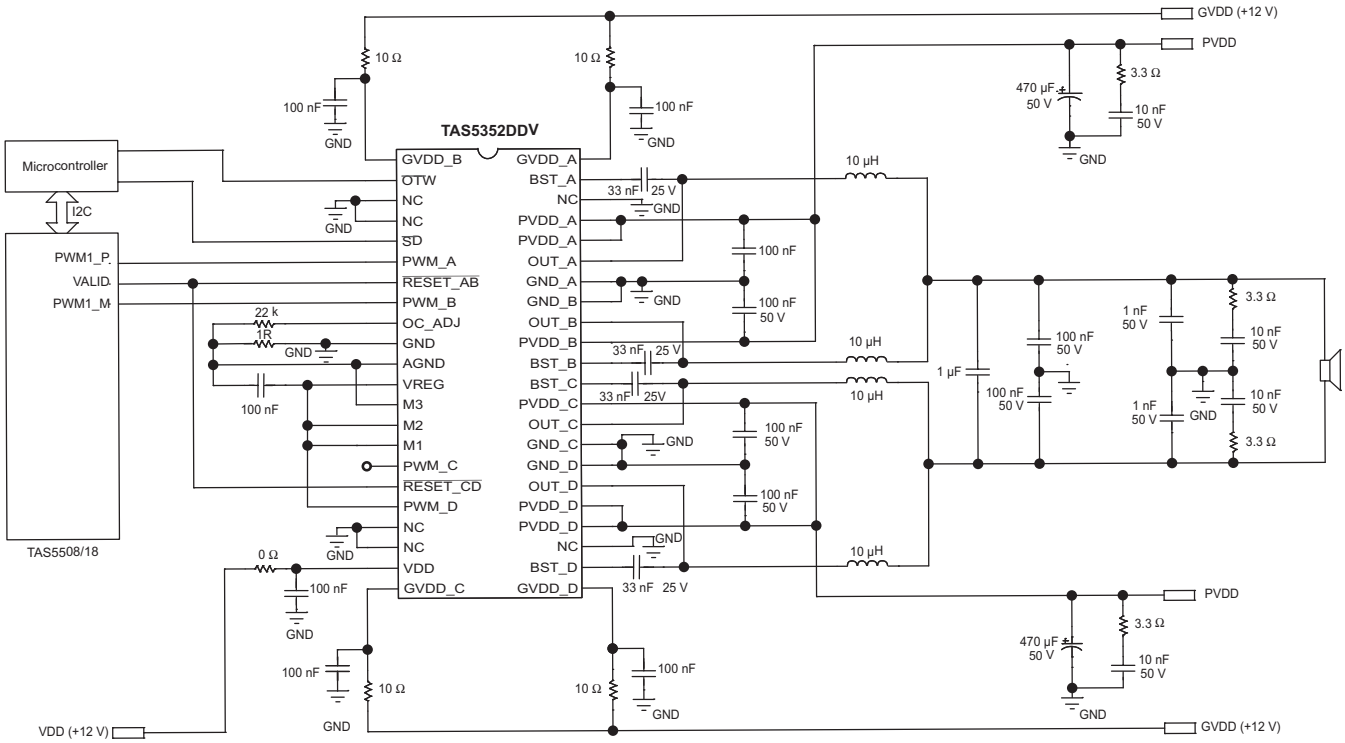

Figure 17. Typical Differential (2N) PBTL Application With AD Modulation Filters

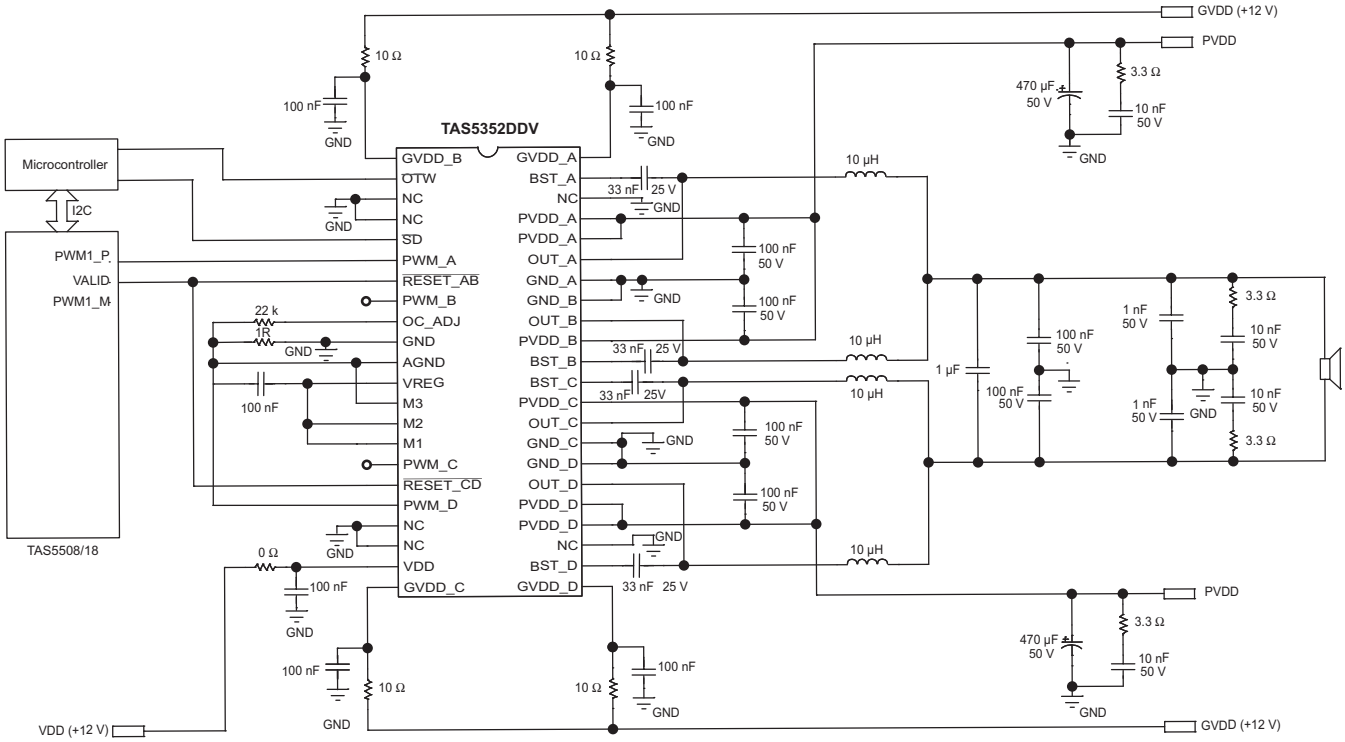

Figure 18. Typical Non-Differential (1N) PBTL Application

Copyright © 2007, Texas Instruments Incorporated

THEORY OF OPERATION

POWER SUPPLIES

To facilitate system design, the TAS5352 needs only a 12 V supply in addition to the (typical) 34.5 V power-stage supply. An internal voltage regulator provides suitable voltage levels for the digital and low-voltage analog circuitry. Additionally, all circuitry requiring a floating voltage supply, e.g., the high-side gate drive, is accommodated by built-in bootstrap circuitry requiring only an external capacitor for each half-bridge.

In order to provide outstanding electrical and acoustical characteristics, the PWM signal path including gate drive and output stage is designed as identical, independent half-bridges. For this reason, each half-bridge has separate gate drive supply (GVDD_X), bootstrap pins (BST_X), and power-stage supply pins (PVDD_X). Furthermore, an additional pin (VDD) is provided as supply for all common circuits. Although supplied from the same 12-V source, it is highly recommended to separate GVDD_A, GVDD_B, GVDD_C, GVDD_D, and VDD on the printed-circuit board (PCB) by RC filters (see application diagram for details). These RC filters provide the recommended high-frequency isolation. Special attention should be paid to placing all decoupling capacitors as close to their associated pins as possible. In general, inductance between the power supply pins and decoupling capacitors must be avoided. (See reference board documentation for additional information.)

For a properly functioning bootstrap circuit, a small ceramic capacitor must be connected from each bootstrap pin (BST_X) to the power-stage output pin (OUT_X). When the power-stage output is low, the bootstrap capacitor is charged through an internal diode connected between the gate-drive power-supply pin (GVDD_X) and the bootstrap pin. When the power-stage output is high, the bootstrap capacitor potential is shifted above the output potential and thus provides a suitable voltage supply for the high-side gate driver. In an application with PWM switching frequencies in the range from 352 kHz to 384 kHz, it is recommended to use 33-nF ceramic capacitors, size 0603 or 0805, for the bootstrap supply. These 33-nF capacitors ensure sufficient energy storage, even during minimal PWM duty cycles, to keep the high-side power stage FET (LDMOS) fully turned on during the remaining part of the PWM cycle. In an application running at a reduced switching frequency, generally 192 kHz, the bootstrap capacitor might need to be increased in value.

Special attention should be paid to the power-stage power supply; this includes component selection, PCB placement, and routing. As indicated, each half-bridge has independent power-stage supply pins (PVDD_X). For optimal electrical performance, EMI compliance, and system reliability, it is important that each PVDD_X pin is decoupled with a 100-nF ceramic capacitor placed as close as possible to each supply pin. It is recommended to follow the PCB layout of the TAS5352 reference design. For additional information on recommended power supply and required components, see the application diagrams given previously in this data sheet.

The 12 V supply should be from a low-noise, low-output-impedance voltage regulator. Likewise, the 34.5 V power-stage supply is assumed to have low output impedance and low noise. The power-supply sequence is not critical as facilitated by the internal power-on-reset circuit. Moreover, the TAS5352 is fully protected against erroneous power-stage turnon due to parasitic gate charging. Thus, voltage-supply ramp rates (dV/dt) are non-critical within the specified range (see the *Recommended Operating Conditions* section of this data sheet).

SYSTEM POWER-UP/POWER-DOWN SEQUENCE

Powering Up

The TAS5352 does not require a power-up sequence. The outputs of the H-bridges remain in a high-impedance state until the gate-drive supply voltage (GVDD_X) and VDD voltage are above the undervoltage protection (UVP) voltage threshold (see the *Electrical Characteristics* section of this data sheet). Although not specifically required, it is recommended to hold $\overline{\text{RESET_AB}}$ and $\overline{\text{RESET_CD}}$ in a low state while powering up the device. This allows an internal circuit to charge the external bootstrap capacitors by enabling a weak pulldown of the half-bridge output.

When the TAS5352 is being used with TI PWM modulators such as the TAS5518, no special attention to the state of $\overline{\text{RESET_AB}}$ and $\overline{\text{RESET_CD}}$ is required, provided that the chipset is configured as recommended.

Powering Down

The TAS5352 does not require a power-down sequence. The device remains fully operational as long as the gate-drive supply (GVDD_X) voltage and VDD voltage are above the undervoltage protection (UVP) voltage threshold (see the *Electrical*

Characteristics section of this data sheet). Although not specifically required, it is a good practice to hold $\overline{\text{RESET_AB}}$ and $\overline{\text{RESET_CD}}$ low during power down, thus preventing audible artifacts including pops or clicks.

When the TAS5352 is being used with TI PWM modulators such as the TAS5518, no special attention to the state of $\overline{\text{RESET_AB}}$ and $\overline{\text{RESET_CD}}$ is required, provided that the chipset is configured as recommended.

Mid Z Sequence Compatability

The TAS5352 is compatable with the Mid Z sequence of the TAS5086 Modulator. The Mid Z Sequence is a series of pulses that is generated by the modulator. This sequence causes the power stage to slowly enable its outputs as it begins to switch.

By slowly starting the PWM switching, the impulse response created by the onset of switching is reduced. This impulse response is the acoustic artifact that is heard in the output transducers (loudspeakers) and is commonly termed "click" or "pop".

The low acoustic artifact noise of the TAS5352 will be further decreased when used in conjunction with the TAS5086 modulator with the Mid Z Sequence enabled.

The Mid Z sequence is primarily used for the single-ended output configuration. It facilitates a "softer" PWM output start after the split cap output configuration is charged.

ERROR REPORTING

The $\overline{\text{SD}}$ and $\overline{\text{OTW}}$ pins are both active-low, open-drain outputs. Their function is for protection-mode signaling to a PWM controller or other system-control device.

Any fault resulting in device shutdown is signaled by the $\overline{\text{SD}}$ pin going low. Likewise, $\overline{\text{OTW}}$ goes low when the device junction temperature exceeds 125°C (see the following table).

$\overline{\text{SD}}$	$\overline{\text{OTW}}$	DESCRIPTION
0	0	Overtemperature (OTE) or overload (OLP) or undervoltage (UVP)
0	1	Overload (OLP) or undervoltage (UVP)
1	0	Junction temperature higher than 125°C (overtemperature warning)
1	1	Junction temperature lower than 125°C and no OLP or UVP faults (normal operation)

Note that asserting either $\overline{\text{RESET_AB}}$ or $\overline{\text{RESET_CD}}$ low forces the $\overline{\text{SD}}$ signal high, independent of faults being present. TI recommends monitoring the $\overline{\text{OTW}}$ signal using the system microcontroller and responding to an overtemperature warning signal by, e.g., turning down the volume to prevent further heating of the device resulting in device shutdown (OTE).

To reduce external component count, an internal pullup resistor to 3.3 V is provided on both $\overline{\text{SD}}$ and $\overline{\text{OTW}}$ outputs. Level compliance for 5-V logic can be obtained by adding external pullup resistors to 5 V (see the *Electrical Characteristics* section of this data sheet for further specifications).

DEVICE PROTECTION SYSTEM

The TAS5352 contains advanced protection circuitry carefully designed to facilitate system integration and ease of use, as well as to safeguard the device from permanent failure due to a wide range of fault conditions such as short circuits, overload, overtemperature, and undervoltage. The TAS5352 responds to a fault by immediately setting the power stage in a high-impedance (Hi-Z) state and asserting the $\overline{\text{SD}}$ pin low. In situations other than overload and over-temperature error ($\overline{\text{OTE}}$), the device automatically recovers when the fault condition has been removed, i.e., the supply voltage has increased.

The device will function on errors, as shown in the following table

BTL MODE		PBTL MODE		SE MODE	
Local Error In	Turns Off	Local Error In	Turns Off	Local Error In	Turns Off
A	A + B	A	A + B + C + D	A	A + B
B		B		B	
C	C + D	C		C	C + D
D		D		D	

Bootstrap UVP does not shutdown according to the table, it shutsdown the respective halfbridge.

Use of TAS5352 in High-Modulation-Index Capable Systems

This device requires at least 30 ns of low time on the output per 384-kHz PWM frame rate in order to keep the bootstrap capacitors charged. As an example, if the modulation index is set to 99.2% in the TAS5508, this setting allows PWM pulse durations down to 10 ns. This signal, which does not meet the 30-ns requirement, is sent to the PWM_X pin and this low-state pulse time does not allow the bootstrap capacitor to stay charged. The TAS5352 device requires limiting the TAS5508 modulation index to 97.7% to keep the bootstrap capacitor charged under all signals and loads.

The TAS5352 contains a bootstrap capacitor under voltage protection circuit (BST_UVP) that monitors the voltage on the bootstrap capacitors. When the

Copyright © 2007, Texas Instruments Incorporated

voltage on the bootstrap capacitors is less than required for proper control of the High-Side MOSFETs, the device will initiate bootstrap capacitor recharge sequences until the bootstrap capacitors are properly charged for robust operation. This function may be activated with PWM pulses less than 30 nS.

Therefore, TI strongly recommends using a TI PWM processor, such as TAS5518, TAS5086 or TAS5508, with the modulation index set at 97.7% to interface with TAS5352.

Overcurrent (OC) Protection With Current Limiting and Overload Detection

The device has independent, fast-reacting current detectors with programmable trip threshold (OC threshold) on all high-side and low-side power-stage FETs. See the following table for OC-adjust resistor values. The detector outputs are closely monitored by two protection systems. The first protection system controls the power stage in order to prevent the output current from further increasing, i.e., it performs a current-limiting function rather than prematurely shutting down during combinations of high-level music transients and extreme speaker load impedance drops. If the high-current situation persists, i.e., the power stage is being overloaded, a second protection system triggers a latching shutdown, resulting in the power stage being set in the high-impedance (Hi-Z) state. Current limiting and overload protection are independent for half-bridges A and B and, respectively, C and D. That is, if the bridge-tied load between half-bridges A and B causes an overload fault, only half-bridges A and B are shut down.

- For the lowest-cost bill of materials in terms of component selection, the OC threshold measure should be limited, considering the power output requirement and minimum load impedance. Higher-impedance loads require a lower OC threshold.
- The demodulation-filter inductor must retain at least 5 µH of inductance at twice the OC threshold setting.

Unfortunately, most inductors have decreasing inductance with increasing temperature and increasing current (saturation). To some degree, an increase in temperature naturally occurs when operating at high output currents, due to core losses and the dc resistance of the inductor's copper winding. A thorough analysis of inductor saturation and thermal properties is strongly recommended.

Setting the OC threshold too low might cause issues such as lack of enough output power and/or unexpected shutdowns due to too-sensitive overload detection.

In general, it is recommended to follow closely the external component selection and PCB layout as given in the *Application* section.

For added flexibility, the OC threshold is programmable within a limited range using a single external resistor connected between the OC_ADJ pin and AGND. (See the *Electrical Characteristics* section of this data sheet for information on the correlation between programming-resistor value and the OC threshold.) It should be noted that a properly functioning overcurrent detector assumes the presence of a properly designed demodulation filter at the power-stage output. It is required to follow certain guidelines when selecting the OC threshold and an appropriate demodulation inductor:

OC-Adjust Resistor Values (kΩ)	Max. Current Before OC Occurs (A), T_C = 75°C
22	10.9
33	9.1
47	7.1

The reported max peak current in the table above is measured with continuous current in 1 Ω, one channel active and the other one muted.

Pin-To-Pin Short Circuit Protection (PPSC)

The PPSC detection system protects the device from permanent damage in the case that a power output pin (OUT_X) is shorted to GND_X or PVDD_X. For comparison the OC protection system detects an over current after the demodulation filter where PPSC detects shorts directly at the pin before the filter. PPSC detection is performed at startup i.e. when VDD is supplied, consequently a short to either GND_X or PVDD_X after system startup will not activate the PPSC detection system. When PPSC detection is activated by a short on the output, all half bridges are kept in a Hi-Z state until the short is removed, the device then continues the startup sequence and starts switching. The detection is controlled globally by a two step sequence. The first step ensures that there are no shorts from OUT_X to GND_X, the second step tests that there are no shorts from OUT_X to PVDD_X. The total duration of this process is roughly proportional to the capacitance of the output LC filter. The typical duration is < 15 ms/µF. While the PPSC detection is in progress, $\overline{SD}$ is kept low, and the device will not react to changes applied to the $\overline{RESET}$ pins. If no shorts are present the PPSC detection passes, and $\overline{SD}$ is released. A device reset will not start a new PPSC detection. PPSC detection is enabled in BTL and PBTL output configurations, the detection is not performed in SE mode. To make sure not to trip the PPSC detection system it is recommended not to insert resistive load to GND_X or PVDD_X.

Copyright © 2007, Texas Instruments Incorporated

Overtemperature Protection

The TAS5352 has a two-level temperature-protection system that asserts an active-low warning signal ($\overline{OTW}$) when the device junction temperature exceeds 125°C (typical) and, if the device junction temperature exceeds 155°C (typical), the device is put into thermal shutdown, resulting in all half-bridge outputs being set in the high-impedance (Hi-Z) state and $\overline{SD}$ being asserted low. OTE is latched in this case. To clear the OTE latch, either $\overline{RESET_AB}$ or $\overline{RESET_CD}$ must be asserted. Thereafter, the device resumes normal operation.

Undervoltage Protection (UVP) and Power-On Reset (POR)

The UVP and POR circuits of the TAS5352 fully protect the device in any power-up/down and brownout situation. While powering up, the POR circuit resets the overload circuit (OLP) and ensures that all circuits are fully operational when the GVDD_X and VDD supply voltages reach stated in the Electrical Characteristics Table. Although GVDD_X and VDD are independently monitored, a supply voltage drop below the UVP threshold on any VDD or GVDD_X pin results in all half-bridge outputs immediately being set in the high-impedance (Hi-Z) state and $\overline{SD}$ being asserted low. The device automatically resumes operation when all supply voltages have increased above the UVP threshold.

DEVICE RESET

Two reset pins are provided for independent control of half-bridges A/B and C/D. When $\overline{RESET_AB}$ is asserted low, all four power-stage FETs in half-bridges A and B are forced into a high-impedance (Hi-Z) state. Likewise, asserting $\overline{RESET_CD}$ low forces all four power-stage FETs in half-bridges C and D into a high-impedance state. Thus, both reset pins are well suited for hard-muting the power stage if needed.

In BTL modes, to accommodate bootstrap charging prior to switching start, asserting the reset inputs low enables weak pulldown of the half-bridge outputs. In the SE mode, the weak pulldowns are not enabled, and it is therefore recommended to ensure bootstrap capacitor charging by providing a low pulse on the PWM inputs when reset is asserted high.

Asserting either reset input low removes any fault information to be signalled on the $\overline{SD}$ output, i.e., $\overline{SD}$ is forced high.

A rising-edge transition on either reset input allows the device to resume operation after an overload fault. To ensure thermal reliability, the rising edge of reset must occur no sooner than 4 ms after the falling edge of $\overline{SD}$.

Copyright © 2007, Texas Instruments Incorporated

PACKAGING INFORMATION

Orderable Device	Status (1)	Package Type	Package Drawing	Pins	Package Qty	Eco Plan (2)	Lead/ Ball Finish	MSL Peak Temp (3)	Samples (Requires Login)
TAS5352DDV	NRND	HTSSOP	DDV	44	35	Green (RoHS & no Sb/Br)	CU NIPDAU	Level-3-260C-168 HR	
TAS5352DDVG4	NRND	HTSSOP	DDV	44	35	Green (RoHS & no Sb/Br)	CU NIPDAU	Level-3-260C-168 HR	
TAS5352DDVR	NRND	HTSSOP	DDV	44	2000	Green (RoHS & no Sb/Br)	CU NIPDAU	Level-3-260C-168 HR	
TAS5352DDVRG4	NRND	HTSSOP	DDV	44	2000	Green (RoHS & no Sb/Br)	CU NIPDAU	Level-3-260C-168 HR	

(1) The marketing status values are defined as follows:
ACTIVE: Product device recommended for new designs.
LIFEBUY: TI has announced that the device will be discontinued, and a lifetime-buy period is in effect.
NRND: Not recommended for new designs. Device is in production to support existing customers, but TI does not recommend using this part in a new design.
PREVIEW: Device has been announced but is not in production. Samples may or may not be available.
OBSOLETE: TI has discontinued the production of the device.

(2) Eco Plan - The planned eco-friendly classification: Pb-Free (RoHS), Pb-Free (RoHS Exempt), or Green (RoHS & no Sb/Br) - please check http://www.ti.com/productcontent for the latest availability information and additional product content details.
TBD: The Pb-Free/Green conversion plan has not been defined.
Pb-Free (RoHS): TI's terms "Lead-Free" or "Pb-Free" mean semiconductor products that are compatible with the current RoHS requirements for all 6 substances, including the requirement that lead not exceed 0.1% by weight in homogeneous materials. Where designed to be soldered at high temperatures, TI Pb-Free products are suitable for use in specified lead-free processes.
Pb-Free (RoHS Exempt): This component has a RoHS exemption for either 1) lead-based flip-chip solder bumps used between the die and package, or 2) lead-based die adhesive used between the die and leadframe. The component is otherwise considered Pb-Free (RoHS compatible) as defined above.
Green (RoHS & no Sb/Br): TI defines "Green" to mean Pb-Free (RoHS compatible), and free of Bromine (Br) and Antimony (Sb) based flame retardants (Br or Sb do not exceed 0.1% by weight in homogeneous material)

(3) MSL, Peak Temp. -- The Moisture Sensitivity Level rating according to the JEDEC industry standard classifications, and peak solder temperature.

Important Information and Disclaimer: The information provided on this page represents TI's knowledge and belief as of the date that it is provided. TI bases its knowledge and belief on information provided by third parties, and makes no representation or warranty as to the accuracy of such information. Efforts are underway to better integrate information from third parties. TI has taken and continues to take reasonable steps to provide representative and accurate information but may not have conducted destructive testing or chemical analysis on incoming materials and chemicals. TI and TI suppliers consider certain information to be proprietary, and thus CAS numbers and other limited information may not be available for release.

In no event shall TI's liability arising out of such information exceed the total purchase price of the TI part(s) at issue in this document sold by TI to Customer on an annual basis.

TAPE AND REEL INFORMATION

REEL DIMENSIONS

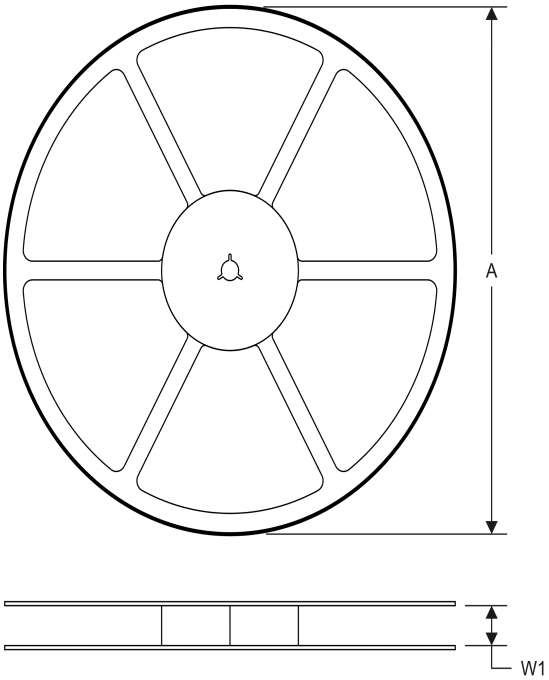

TAPE DIMENSIONS

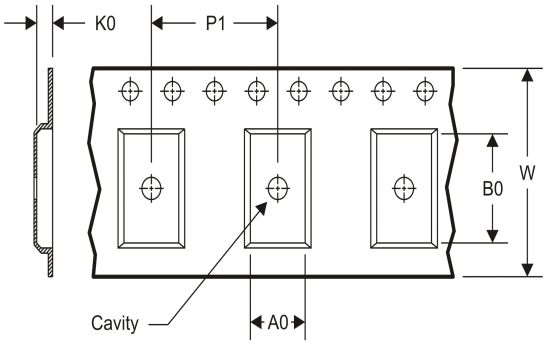

A0	Dimension designed to accommodate the component width
B0	Dimension designed to accommodate the component length
K0	Dimension designed to accommodate the component thickness
W	Overall width of the carrier tape
P1	Pitch between successive cavity centers

TAPE AND REEL INFORMATION

*All dimensions are nominal

Device	Package Type	Package Drawing	Pins	SPQ	Reel Diameter (mm)	Reel Width W1 (mm)	A0 (mm)	B0 (mm)	K0 (mm)	P1 (mm)	W (mm)	Pin1 Quadrant
TAS5352DDVR	HTSSOP	DDV	44	2000	330.0	24.4	8.6	15.6	1.8	12.0	24.0	Q1

TAPE AND REEL BOX DIMENSIONS

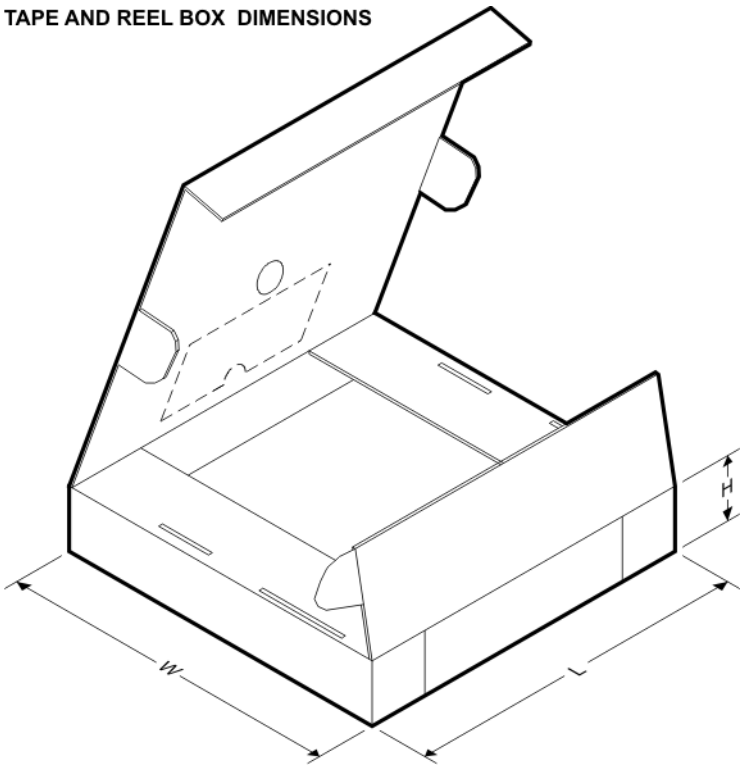

*All dimensions are nominal

Device	Package Type	Package Drawing	Pins	SPQ	Length (mm)	Width (mm)	Height (mm)
TAS5352DDVR	HTSSOP	DDV	44	2000	367.0	367.0	45.0

DDV (R–PDSO–G44) PowerPAD ™ PLASTIC SMALL OUTLINE PACKAGE (DIE DOWN)

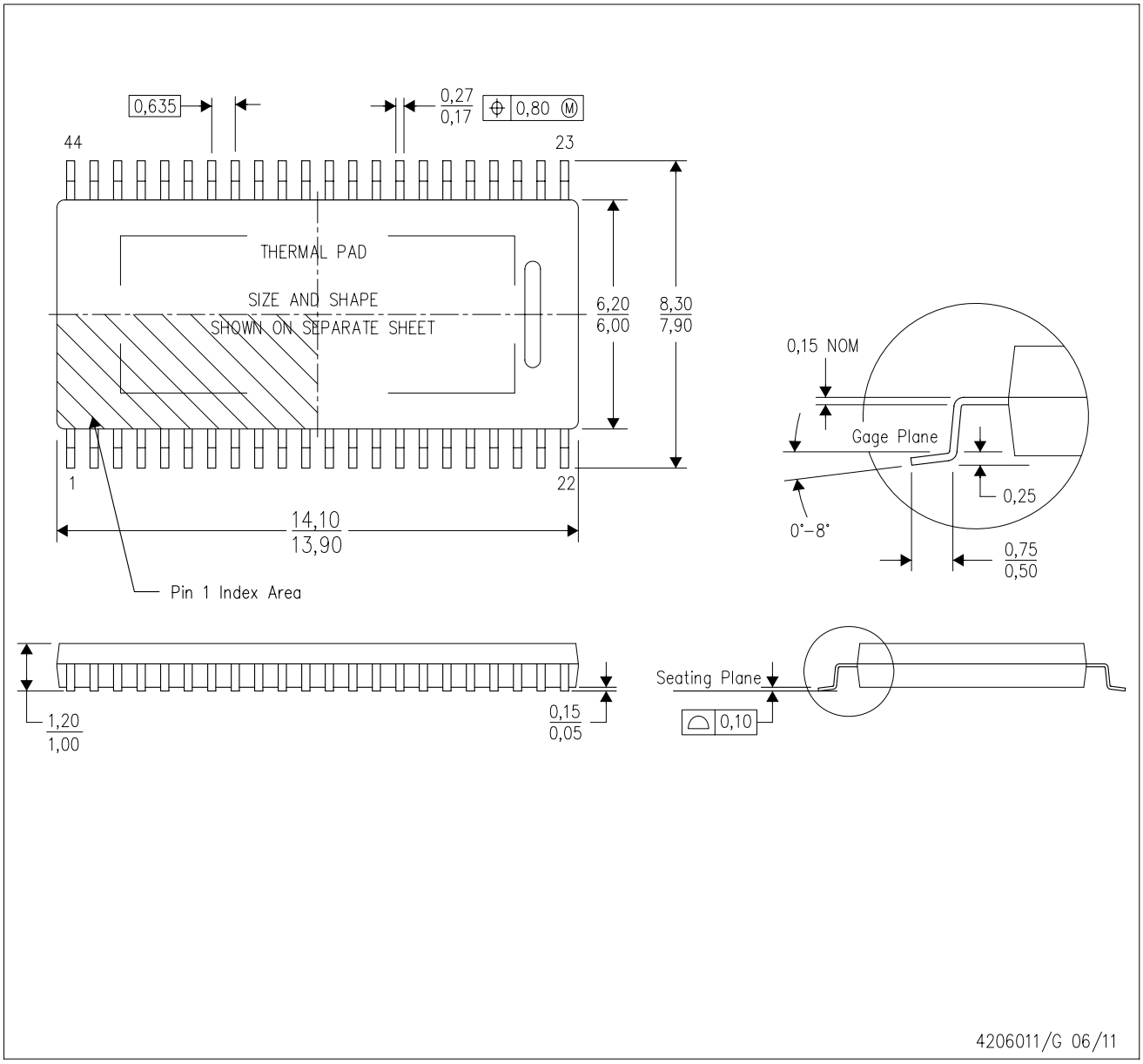

NOTES:
A. All linear dimensions are in millimeters. Dimensioning and tolerancing per ASME Y14.5M–1994.
B. This drawing is subject to change without notice.
C. Body dimensions do not include mold flash or protrusion not to exceed 0,15.
D. This package is designed to be attached directly to an external heatsink. Refer to Technical Brief, PowerPad Thermally Enhanced Package, Texas Instruments Literature No. SLMA002 for information regarding recommended board layout. This document is available at www.ti.com <http://www.ti.com>. See the product data sheet for details regarding the exposed thermal pad dimensions.

PowerPAD is a trademark of Texas Instruments.

DDV (R-PDSO-G44) PowerPAD ™SMALL OUTLINE PACKAGE

THERMAL INFORMATION

This PowerPAD™ package incorporates an exposed thermal pad that is designed to be attached directly to an external heatsink. This design optimizes the heat transfer from the integrated circuit (IC).

For additional information on the PowerPAD package and how to take advantage of its heat dissipating abilities, refer to Technical Brief, PowerPAD Thermally Enhanced Package, Texas Instruments Literature No. SLMA002 and Application Brief, PowerPAD Made Easy, Texas Instruments Literature No. SLMA004. Both documents are available at www.ti.com.

The exposed thermal pad dimensions for this package are shown in the following illustration.

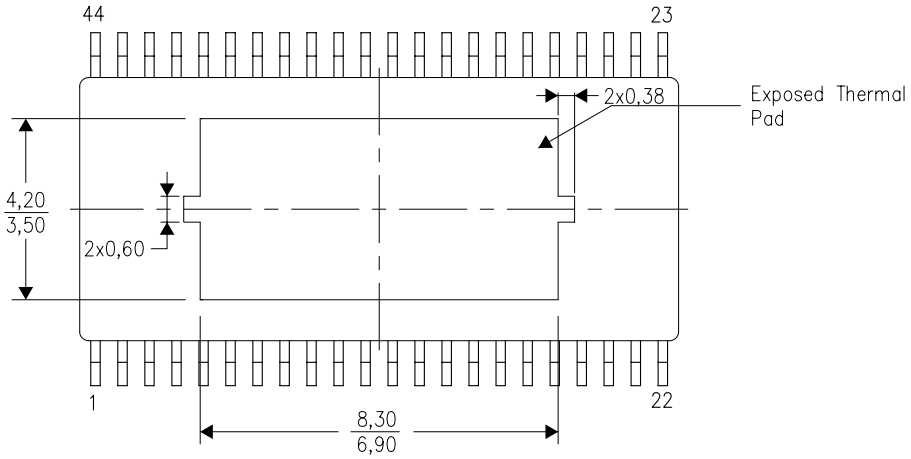

Top View

Exposed Thermal Pad Dimensions

4206975-2/D 07/11

NOTE: All linear dimensions are in millimeters

PowerPAD is a trademark of Texas Instruments

IMPORTANT NOTICE

Texas Instruments Incorporated and its subsidiaries (TI) reserve the right to make corrections, enhancements, improvements and other changes to its semiconductor products and services per JESD46C and to discontinue any product or service per JESD48B. Buyers should obtain the latest relevant information before placing orders and should verify that such information is current and complete. All semiconductor products (also referred to herein as “components”) are sold subject to TI’s terms and conditions of sale supplied at the time of order acknowledgment.

TI warrants performance of its components to the specifications applicable at the time of sale, in accordance with the warranty in TI’s terms and conditions of sale of semiconductor products. Testing and other quality control techniques are used to the extent TI deems necessary to support this warranty. Except where mandated by applicable law, testing of all parameters of each component is not necessarily performed.

TI assumes no liability for applications assistance or the design of Buyers’ products. Buyers are responsible for their products and applications using TI components. To minimize the risks associated with Buyers’ products and applications, Buyers should provide adequate design and operating safeguards.

TI does not warrant or represent that any license, either express or implied, is granted under any patent right, copyright, mask work right, or other intellectual property right relating to any combination, machine, or process in which TI components or services are used. Information published by TI regarding third-party products or services does not constitute a license to use such products or services or a warranty or endorsement thereof. Use of such information may require a license from a third party under the patents or other intellectual property of the third party, or a license from TI under the patents or other intellectual property of TI.

Reproduction of significant portions of TI information in TI data books or data sheets is permissible only if reproduction is without alteration and is accompanied by all associated warranties, conditions, limitations, and notices. TI is not responsible or liable for such altered documentation. Information of third parties may be subject to additional restrictions.

Resale of TI components or services with statements different from or beyond the parameters stated by TI for that component or service voids all express and any implied warranties for the associated TI component or service and is an unfair and deceptive business practice. TI is not responsible or liable for any such statements.

Buyer acknowledges and agrees that it is solely responsible for compliance with all legal, regulatory and safety-related requirements concerning its products, and any use of TI components in its applications, notwithstanding any applications-related information or support that may be provided by TI. Buyer represents and agrees that it has all the necessary expertise to create and implement safeguards which anticipate dangerous consequences of failures, monitor failures and their consequences, lessen the likelihood of failures that might cause harm and take appropriate remedial actions. Buyer will fully indemnify TI and its representatives against any damages arising out of the use of any TI components in safety-critical applications.

In some cases, TI components may be promoted specifically to facilitate safety-related applications. With such components, TI’s goal is to help enable customers to design and create their own end-product solutions that meet applicable functional safety standards and requirements. Nonetheless, such components are subject to these terms.

No TI components are authorized for use in FDA Class III (or similar life-critical medical equipment) unless authorized officers of the parties have executed a special agreement specifically governing such use.

Only those TI components which TI has specifically designated as military grade or “enhanced plastic” are designed and intended for use in military/aerospace applications or environments. Buyer acknowledges and agrees that any military or aerospace use of TI components which have ***not*** been so designated is solely at the Buyer's risk, and that Buyer is solely responsible for compliance with all legal and regulatory requirements in connection with such use.

TI has specifically designated certain components which meet ISO/TS16949 requirements, mainly for automotive use. Components which have not been so designated are neither designed nor intended for automotive use; and TI will not be responsible for any failure of such components to meet such requirements.

Products		**Applications**	
Audio	www.ti.com/audio	Automotive and Transportation	www.ti.com/automotive
Amplifiers	amplifier.ti.com	Communications and Telecom	www.ti.com/communications
Data Converters	dataconverter.ti.com	Computers and Peripherals	www.ti.com/computers
DLP® Products	www.dlp.com	Consumer Electronics	www.ti.com/consumer-apps
DSP	dsp.ti.com	Energy and Lighting	www.ti.com/energy
Clocks and Timers	www.ti.com/clocks	Industrial	www.ti.com/industrial
Interface	interface.ti.com	Medical	www.ti.com/medical
Logic	logic.ti.com	Security	www.ti.com/security
Power Mgmt	power.ti.com	Space, Avionics and Defense	www.ti.com/space-avionics-defense
Microcontrollers	microcontroller.ti.com	Video and Imaging	www.ti.com/video
RFID	www.ti-rfid.com		
OMAP Mobile Processors	www.ti.com/omap	**TI E2E Community**	e2e.ti.com
Wireless Connectivity	www.ti.com/wirelessconnectivity		

Mailing Address: Texas Instruments, Post Office Box 655303, Dallas, Texas 75265
Copyright © 2012, Texas Instruments Incorporated

Общество с ограниченной ответственностью «МосЧип» ИНН 7719860671 / КПП 771901001
Адрес: 105318, г.Москва, ул.Щербаковская д.3, офис 1107

Данный компонент на территории Российской Федерации

Вы можете приобрести в компании MosChip.

Для оперативного оформления запроса Вам необходимо перейти по данной ссылке:

http://moschip.ru/get-element

Вы можете разместить у нас заказ для любого Вашего проекта, будь то серийное производство или разработка единичного прибора.

В нашем ассортименте представлены ведущие мировые производители активных и пассивных электронных компонентов.

Нашей специализацией является поставка электронной компонентной базы двойного назначения, продукции таких производителей как XILINX, Intel (ex.ALTERA), Vicor, Microchip, Texas Instruments, Analog Devices, Mini-Circuits, Amphenol, Glenair.

Сотрудничество с глобальными дистрибьюторами электронных компонентов, предоставляет возможность заказывать и получать с международных складов практически любой перечень компонентов в оптимальные для Вас сроки.

На всех этапах разработки и производства наши партнеры могут получить квалифицированную поддержку опытных инженеров.

Система менеджмента качества компании отвечает требованиям в соответствии с ГОСТ Р ИСО 9001, ГОСТ РВ 0015-002 и ЭС РД 009

Офис по работе с юридическими лицами:

105318, г.Москва, ул.Щербаковская д.3, офис 1107, 1118, ДЦ «Щербаковский»

Телефон: +7 495 668-12-70 (многоканальный)

Факс: +7 495 668-12-70 (доб.304)

E-mail: info@moschip.ru

Skype отдела продаж:
moschip.ru
moschip.ru_4
moschip.ru_6
moschip.ru_9