OMRON®

Digital Counter

H7CR

Compact 1/16 DIN Counters with Easy-to-Use Functions, Four- or Six-Digit LCD Displays

- Designed for easy operation
- High-speed response — 5 K counts per second
- Prescale function displays in units of actual physical parameters — length, volume, etc. (except A/SA types)
- H7CR-C and -SC provide large/small discrimination mode ideal for positioning and production control
- Easy-to-read backlit LCD display
- On-line change of set value
- 4-level key protect
- H7CR-S short 64 mm (2.52 in) body

Ordering Information

When placing your order, specify the supply voltage after the part number. For example, **H7CR-B 100 to 240 VAC**.

■ ECONOMY COUNTERS

Number of presets	One	
Display type	6 digit LCD, not backlit	
Input type	No-voltage	Voltage
Contact output	**H7CR-A**	**H7CR-AV**
Transistor output	**H7CR-AS**	**H7CR-AVS**
Sensor power supply	Not available	Not available
Counter supply voltages	100 to 240 VAC, 50/60 Hz or 24 VAC	

■ STANDARD COUNTERS

Number of presets		One		Two (Non-independent)	
Display type		6 digit LCD, backlit		6 digit LCD, backlit	
Input type		No-voltage	Voltage	No-voltage	Voltage
12 VDC sensor supply voltage	Contact output	**H7CR-B**	**H7CR-BV**	**H7CR-BW**	**H7CR-BWV**
	Transistor output	**H7CR-BS**	**H7CR-BVS**	**H7CR-BWS**	**H7CR-BWVS**
24 VDC sensor supply voltage	Contact output	**H7CR-BG**	**H7CR-BVG**	**H7CR-BWG**	**H7CR-BWVG**
	Transistor output	**H7CR-BSG**	**H7CR-BVSG**	**H7CR-BWSG**	**H7CR-BWVSG**
Counter supply voltages		100 to 240 VAC, 50/60 Hz or 24 VAC/12 to 24 VDC			

Number of presets		One		Two (Non-independent)	
Display type		4-digit LCD, backlit		4-digit LCD backlit	
Input type		No-voltage		No-voltage	
Sensor supply voltage		12 VDC	24 VDC	12 VDC	24 VDC
Output type	Contact output	**H7CR-B4**	**H7CR-B4G**	**H7CR-B4W**	**H7CR-B4WG**
Counter supply voltage		100 to 240 VAC, 50/60 Hz			

■ REVERSIBLE +/– RANGE COUNTERS

Number of presets		One		Two (Non-independent)	
Display type		6-digit LCD, backlit		6-digit LCD, backlit	
Input type		No-voltage	Voltage	No-voltage	Voltage
12 VDC sensor supply voltage	Contact output	**H7CR-C**	**H7CR-CV**	**H7CR-CW**	**H7CR-CWV**
	Transistor output	**H7CR-CS**	**H7CR-CVS**	**H7CR-CWS**	**H7CR-CWVS**
24 VDC sensor supply voltage	Contact output	**H7CR-CG**	**H7CR-CVG**	**H7CR-CWG**	**H7CR-CWVG**
	Transistor output	**H7CR-CSG**	**H7CR-CVSG**	**H7CR-CWSG**	**H7CR-CWVSG**
Counter supply voltages		100 to 240 VAC, 50/60 Hz or 24 VAC/12 to 24 VDC			

■ SHORT BODY COUNTERS

Model	Economy	Standard			Reversible +/– Range	
Number of presets	One	One		Two	One	Two
Display type	6-digit, not backlit	6-digit, backlit	4-digit, backlit	6-digit, backlit	6-digit backlit	
Input type	No-voltage					
Contact output	**H7CR-SAL**	**H7CR-SBL**	**H7CR-SB4L**	**—**	**H7CR-SCL**	**—**
Transistor	**H7CR-SASL**	**H7CR-SBSL**	**—**	**H7CR-SBWSL**	**H7CR-SCSL**	**H7CR-SCWSL**
Counter supply voltage	12 to 24 VDC					

■ SOCKET-MOUNT COUNTERS

Number of presets	One		
Display type	6-digit LCD, backlit	4-digit LCD, backlit	6-digit LCD, backlit
Input type	Power supply reset type		Memory backup type
Contact output	**H7CR-8**	**H7CR-84***	**H7CR-11**
Transistor	**H7CR-8S**	**—**	**H7CR-11S**
Counter supply voltage	100 to 240 VAC, 50/60 Hz or 24 VAC/12 to 24 VDC		

* Available with 100 to 240 VAC supply voltage only.

■ ACCESSORIES

Description			**Part number**
Sockets	For H7CR-8 and H7CR-8S	Bottom surface or track mounting, top screws	**P2CF-08**
		Back mounting, for use with Y92F-30 mounting adapter, bottom screw terminals	**P3G-08**
	For H7CR-11 and H7CR-11S	Bottom surface or track mounting, top screws	**P2CF-11**
		Back mounting, for use with Y92F-30 mounting adapter, bottom screw terminals	**P3GA-11**
Soft cover with two mounting clips for front panel protection			**Y92A-48F1**
Shock prevention terminal cover protects wiring connections			**Y92A-48T**
Mounting track for P2CF sockets		DIN rail, 50 cm (1.64 ft) length	**PFP-50N**
		DIN rail, 1 m (3.28 ft) length	**PFP-100N**
		End plate	**PFP-M**
Panel mounting adapter*		For use with H7CR-8/-11 digital counters	**Y92F-30**

* Panel mounting adapter is included with H7CR-A/-B/-C digital counters.
Order separately for use with H7CR-8/-11 counters.

■ REPLACEMENT PARTS

Description	**Part number**
Panel mounting adapter*	**Y92F-30**

* Panel mounting adapter is included with H7CR-A/-B/-C digital counters.

Specifications

■ GENERAL CAPABILITIES

Model	H7CR-A Series	H7CR-B Series	H7CR-C Series
Classification	Preset counter (economy)	Preset counter (standard)	Preset counter (+/– range)
Mounting	Flush mounting		
External connections	Screw terminals		
Degree of protection	IEC: IP54 (panel surface)		
Output modes	N, F	N, F, C, R, K, P, Q, A	K, D, L, H
Input modes	Up, down, reversible A (command inputs), reversible B (individual inputs), reversible C (phase difference inputs)		Reversible A (command inputs), reversible B (individual inputs), reversible C (phase difference inputs)
Reset system	External and manual resets	External, manual, and automatic (internal according to C, R, P, and Q mode operation) resets External: closing contacts 6 & 7 Manual: pressing reset button (*certain models only*) Automatic: available only in modes C, R, P, and Q	External and manual resets External: closing contacts 6 & 7 Manual: pressing reset button (*certain models only*)
Scaling function	None	0.001 to 99.999 or 9.999	0.001 to 99.999
Decimal point adjustments	None	Rightmost 3 digits	
Sensor power supply	None	12 or 24 VDC	
Input signals	Count, reset	Count, reset, key protect	
Input method	No-voltage input: Via opening and closing of contact Voltage input: Via high and low signal voltage Key protect (standard and +/–range counters): No-voltage inputs only		
Control output	SPST-NO contact or transistor (NPN open collector) output	Single preset types: One SPST-NO contact or transistor (NPN open collector) output Double preset types: Two SPST-NO contacts or transistor (NPN open collector) output	
Displays	7-segment LCD present value and preset displays; LCD character indicators for outputs, power, and modes		
Display type	LCD; 8mm (0.32 in.) H Present Value, 4 mm (0.16 in.) H Set Value	Backlit LCD; 8 mm (0.24 in.) H Present Value, 4 mm (0.16 in.) H Set Value	
Digits	6 digits, 0 to 999,999	6 or 4 digits; 0 to 999,999 or 0 to 9,999	6 digits positive/5 digits negative, -99,999 to 999,999
Memory backup	Backup time for power interruption: Approx. 10 years at 20°C (68°F); non-replaceable lithium battery		

■ H7CR-S, -8, -11

Model	H7CR-SA	H7CR-SB□□	H7CR-SC	H7CR-8□	H7CR-11
Classification	Preset counter (economy)	Preset counter (standard)	Preset counter (+/– range)	Preset counter (standard)	Preset counter (standard)
Mounting	Flush mounting			Flush or surface mounting	
External connections	Screw terminals			Socket	
Degree of protection	IEC: IP54 (panel surface)				
Output modes	N, F	N, F, C, R, K, P, Q, A	K, D, L, H	N, F, C, R, K, P, Q, A	
Input modes	Up, Down & Reversible A (command inputs), Reversible B (individual inputs), Reversible C (Phase difference inputs)		Reversible A (command inputs), Reversible B (individual inputs), Reversible C (phase difference inputs)	Up, Down & Reversible A (command inputs), Reversible B (individual inputs), Reversible C (phase difference inputs)	
Reset system	External and manual resets	External, manual, automatic (internal according to C, R, P, and Q operation) resets	External and manual resets	External, manual, power supply, and automatic (internal according to C, R, P, and Q operation) resets	External, manual, automatic (internal according to C, R, P, and Q operation) resets
Scaling function	None	0.001 to 99.999 for 6-digit, 0.001 to 9.999 for 4-digit			
Decimal point adjustments	None	Rightmost 3 digits			
Input signals	Count, reset	Count, reset, key protect		Count, reset	Count, reset, and key protect
Input method	No-voltage input: Via opening and closing of contact				
Control output	SPST-NO contact or transistor (NPN open collector) output	Single preset types: SPST-NO contact or transistor (NPN open collector) output Double preset types: DPST-NO contact or transistor (NPN open collector) output		SPST-NO contact or transistor (NPN open collector) output	SPDT-NO contact or transistor (NPN open collector) output
Displays	7-segment LCD present value and preset displays; LCD character indicators for outputs, power, and modes				
Display type	Backlit LCD				
Digits	6 digits (0 to 999,999)	6 or 4 digits; 0 to 999,999 or 0 to 9,999	6 digits positive and 5 digits negative (-99,999 to 999,999)	6 or 4 digits; 0 to 999,999 or 0 to 9,999	6 digits (0 to 999,999)
Memory backup	Backup time for power interruption: Approx. 10 years at 20°C (68°F); non-replaceable lithium battery				

■ OUTPUT MODES SUMMARY

Output mode	Description		Applicable counter series
	Single preset counter	Double preset counter	
N	Sustained output	Sustained output 2, selectable sustained or one-shot output 1	H7CR-A, -B, -SA, -SB□, -8□, -11
F	Sustained output, overrun display	Sustained output 2, selectable sustained or one-shot output 1	
C	One-shot output	One-shot output 2, selectable one-shot or sustained output 1	
R	One-shot output	One-shot output 2, selectable one-shot or sustained output 1	
K	One-shot output, overrun display	One-shot output 2, selectable one-shot or sustained output 1	
P	One-shot output	One-shot output 2, selectable one-shot or sustained output 1	
Q	One-shot output, overrun display	One-shot output 2, selectable one-shot or sustained output 1	
A	One-shot output	One-shot output 2, selectable one-shot or sustained output 1	
D	Instantaneous output, count value = preset	Instantaneous outputs when count value = preset	H7CR-C, -SC
L	Sustained output, count value ≥ preset	Sustained output 2, count value ≥ preset, sustained output 1, count value ≤ preset	
H	Sustained output, count value ≥ preset	Sustained outputs when count values ≥ preset	
K	One-shot output, count value = preset	One-shot outputs, count value = preset	

■ RATINGS

Model	H7CR-A Series	H7CR-B Series	H7CR-C Series
Supply voltage	100 to 240 VAC, 50/60 Hz or 24 VAC, 50/60 Hz (permissible ripple: 20% max.)	100 to 240 VAC, 50/60 Hz or 24 VAC/12 to 24 VDC (permissible ripple: 20% max.)	
Operating voltage range	85% to 110% of rated voltage		
Power consumption	Approx. 1.7 VA at 50 Hz, 240 VAC; 0.6 W at 24 VDC	Approx. 6.6 VA at 50 Hz, 240 VAC; 3.2 W at 24 VDC*	
Max. counting speed	30 cps, or 1 or 5 kcps (same setting CP1 and CP2)		
Reset	Min. pulse width for external reset: 20 ms, manual reset	Min. pulse width for external reset: 1 or 20 ms, manual reset	
Key protect	Not applicable	Response time: 1 second	
One-shot durations	10, 50, 100, 200, or 500 ms	10, 50, 100, 200, or 500 ms (separate settings for presets 1 and 2)	
Inputs (count, reset)	No-voltage inputs ON impedance: 1kΩ max. (approx. 2 mA when 0 kΩ) ON residual voltage 2 V max.; 1 V max. for H7CR-□4 OFF impedance 100 kΩ min. Voltage inputs High level: 4.5 to 30 VDC Low level: 0 to 2 VDC Input resistance: Approx. 4.7 kΩ		
Key protect input	Not applicable	No-voltage input	ON impedance: 1 kΩ max. ON residual voltage: 1 V max. OFF impedance: 100 kΩ min.
Control output	Contacts: 3 A, 250 VAC; general use (p.f. = 1) Transistor: Open collector; 100 mA at 30 VDC max. residual voltage 2 V max. (approx. 1 V)		
Sensor power supply	Not applicable	100 mA, 12 VDC±10 (5% ripple max.) 50 mA, 24 VDC±10 (5% ripple max.)	
Ambient operating temperature	-10° to 55°C with no icing (14° to 131°F)		
Storage temperature	-25° to 65°C (-13° to 149°F) with no icing		
Ambient operating humidity	35% to 85% RH		

*Upon power application, a surge current of approx. 5 A at 240 VAC and 8 A at 24 VAC or 24 VDC flows for 2 ms.

H7CR-S, -8, -11

Model	H7CR-SA	H7CR-SB□	H7CR-SC	H7CR-8□	H7CR-11
Type	Economy	Standard	+/– range	Socket mount	Socket mount
Supply voltage	12 to 24 VDC (20% max. permissible ripple)			100 to 240 VAC, 50/60 Hz or 24 VAC/12 to 24 VDC (20% max. permissible ripple)	
Operating voltage range	85% to 110% of rated voltage				
Power consumption	Approx. 1.3 W at 24 VDC			Approx. 2.8 VA at 50 Hz, 240 VAC (approx. 5 A (24 VDC/240 VAC) surge current for 2 ms upon power application) Approx. 1.3 W at 24 VDC (approx. 8 A (24 VDC/24 VAC) surge current for 2 ms upon power application)	
Max. counting speed	30 cps, or 1 or 5 kcps (same setting CP1 and CP2)				
Reset	Min. pulse width for external reset: 20 ms	Min. pulse width for external reset: 1 or 20 ms		Min. pulse width for external reset: 1 or 20 ms, power reset: 0.5 s	Min. pulse width for external reset: 1 or 20 ms
Key protect	Not applicable	Response time: 1 second			
One-shot durations	10, 50, 100, 200, and 500 ms	10, 50, 100, 200, and 500 ms (separate settings for presets 1 and 2)		10, 50, 100, 200, and 500 ms	
Inputs (count, reset)	No-voltage inputs	ON impedance: 1kΩ max. (approx. 2 mA when 0 kΩ) ON residual voltage: 2 V max. OFF impedance 100 kΩ min.			
Key protect input	Not applicable	No-voltage input ON impedance: 1 kΩ max. (approx. 2 mA when 0 kΩ) ON residual voltage: 1 V max. OFF impedance: 100 kΩ min.		Not applicable	No voltage input ON impedance: 1 kΩ max. (approx. 2 mA when 0 kΩ) ON residual voltage: 1 V max. OFF impedance: 100 kΩ min.
Control output	Contacts: 3 A, 250 VAC; general use (p.f. = 1) Transistor: Open collector; 100 mA at 30 VDC max. residual voltage 2 V max. (approx. 1 V)				
Ambient operating temperature	-10° to 55°C (14° to 131°F) with no icing				
Storage temperature	-25° to 65°C (-13° to 149°F) with no icing				
Ambient operating humidity	35% to 85% RH				

Approved by the following standards:

UL

CSA

SEV

CE (EMC)

■ CHARACTERISTICS

Insulation resistance	100 MΩ min. (at 500 VDC) (between current-carrying terminal and exposed non-current-carrying metal parts, and between non-continuous contacts)
Dielectric strength	2,000 VAC, 50/60 Hz for 1 min (between current-carrying terminal and exposed non-current-carrying metal parts)
Impulse voltage	Between power terminals: 1 kV for 24 or 12-24 VDC power supply, 3 kV for others Between current-carrying terminal and exposed non-current-carrying metal parts: 1.5kV for 24 or 12-24 VDC power supply, 4.5 kV for others
Noise immunity	±2 kV between power terminals, ±600 V between input terminals (square-wave noise via noise simulator; pulse width: 1μs; 1-ns rise)
Static immunity	Malfunction: 8 kV; destruction: 15 kV
Vibration	Mechanical durability: 10 to 55 Hz with 0.75-mm (0.03 in) single amplitude/55 to 150 Hz with 10 G 32 min each in three directions Malfunction durability: 10 to 55 Hz with 0.5-mm (0.02 in) single amplitude/55 to 150 Hz with 10 G 32 min each in three directions
Shock	Mechanical durability: 30 G Malfunction durability: 10 G
Life	Mechanical: 10 million operations min. Electrical: 100,000 operations min. (at 3 A, 250 VAC general in use (p.f. = 0.7 to 0.8)
Weight	Economical counters: AC types, approx. 230 g (8.1 oz.); DC types, approx. 150 g (5.3 oz.) Standard and +/– range counters: Approx. 170 g (6 oz.)

Input/Output Functions

■ INPUTS

CP1/CP2 (count inputs)	• Count signal inputs. • Up, Down, and Reversible (command, individual, or phase difference) inputs accepted. • Maximum counting speed: 5 kcps.
Reset	• Present value reset (to zero in Up or Up/Down modes, to preset with 1-stage models in Down mode and to preset 2 for 2-stage models in Down mode). • Count inputs are not acknowledged while reset input is ON. • Reset indicator lit while reset input is ON.
Key protect	• Reset, Right Shift and Up keys are inoperative while key protect input is ON. • Although Display key remains effective, only monitoring of settings is possible. • Keys protected indicator lit while key protect input is ON. • Effective when power supply is turned off.

Count Input vs. Reset Input

When the RESET input is ON or the RESET key input is ON, the count input is prohibited and the present value is reset. However, when the key protect input is ON and the key protect level is KP-2 or KP-4, no RESET key input is accepted.

Reset Time

Set to 1 ms if high-speed resetting is necessary. Set the reset time to 20 ms if you need to prevent false signals caused by electrical noise from affecting the counter.

■ OUTPUTS

Outputs 1 and 2	Outputs made according to designated output mode when corresponding preset is reached.

Using Prescale Function

The prescale function converts the number of input counts into a user-selectable value. The example below shows a system that uses 250 encoder pulses to determine when an object has advanced 0.5 meters. Here is how to convert pulses into a unit of measure appropriate for your application:

1. Set the decimal point between the third and fourth digits.

2. Set a prescale value of 0.002. This is calculated by dividing the unit of measure (0.5) by the number of pulse counts (250).

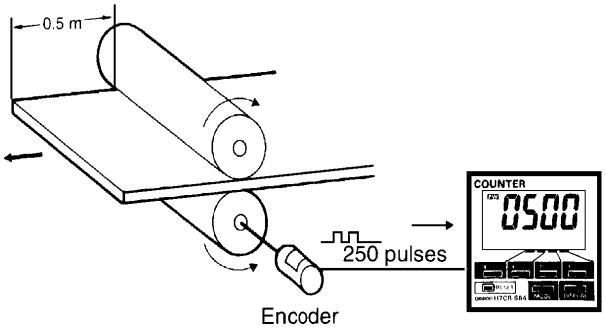

Timing Charts

■ INPUT MODES

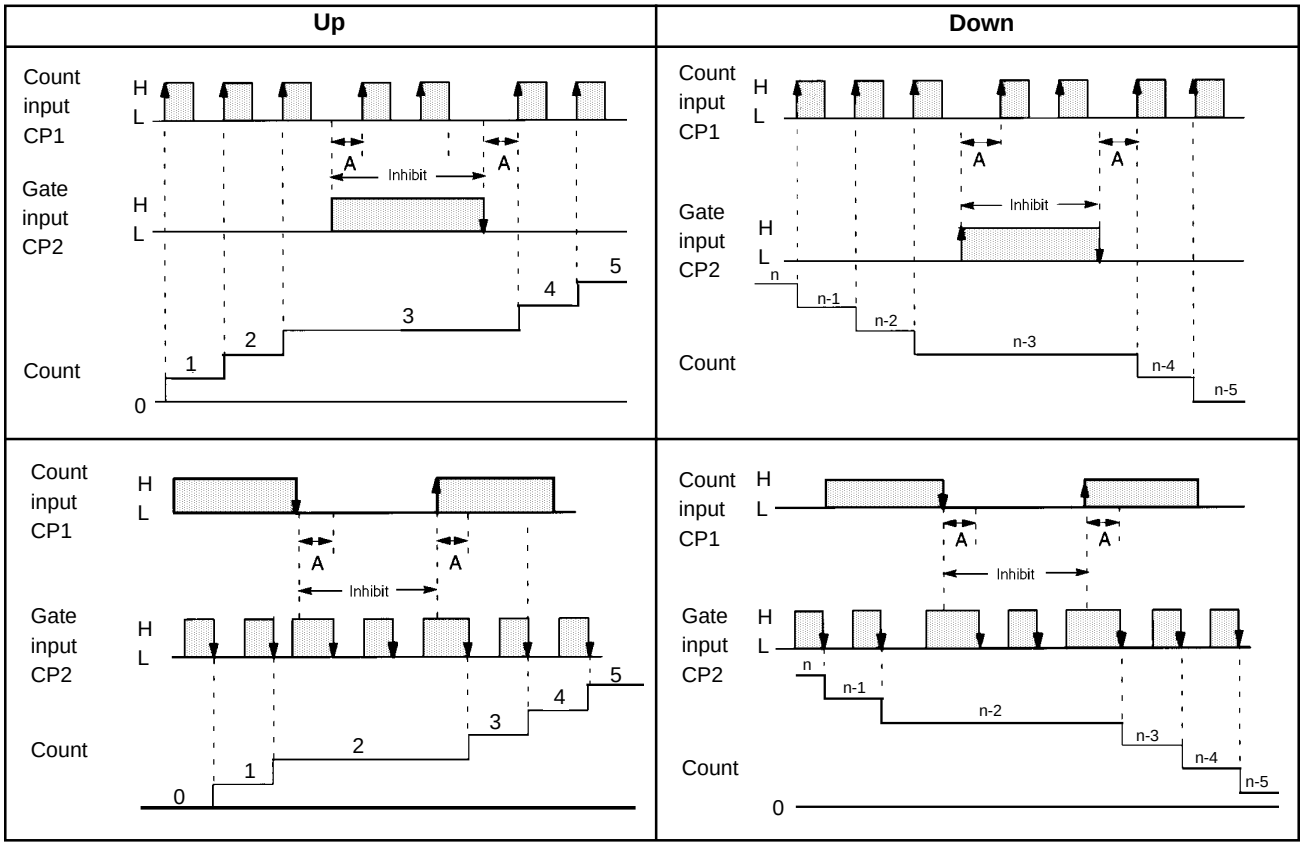

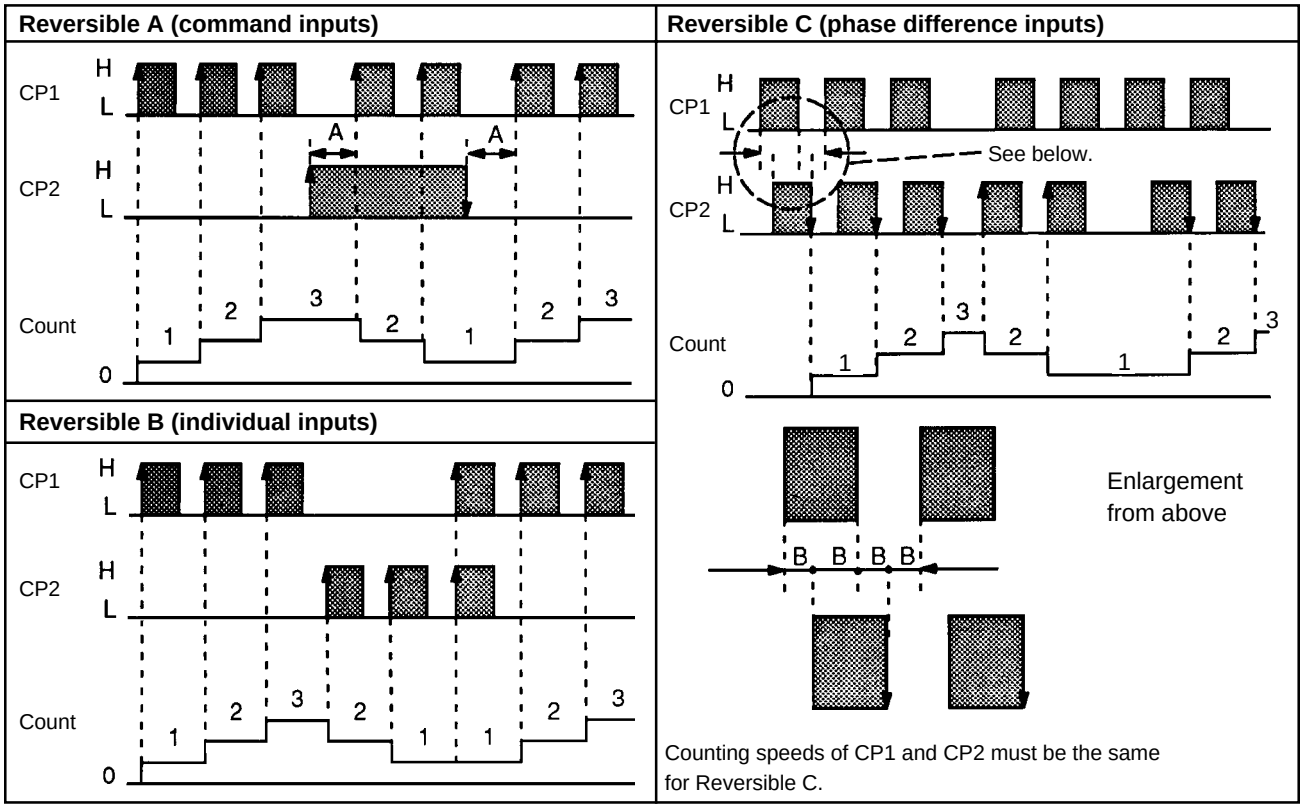

A: Minimum signal width

B: Must be at least 1/2 of minimum signal width. Signals may not be counted if the minimums for A and B are not met.

■ H7CR-A AND H7CR-B COUNTER OUTPUT OPERATIONS

Bold line represents present value; Output 2 operation applies for single-preset models. H7CR-A models have only Mode N and F.

Output Mode N Present value display and outputs are maintained until reset.

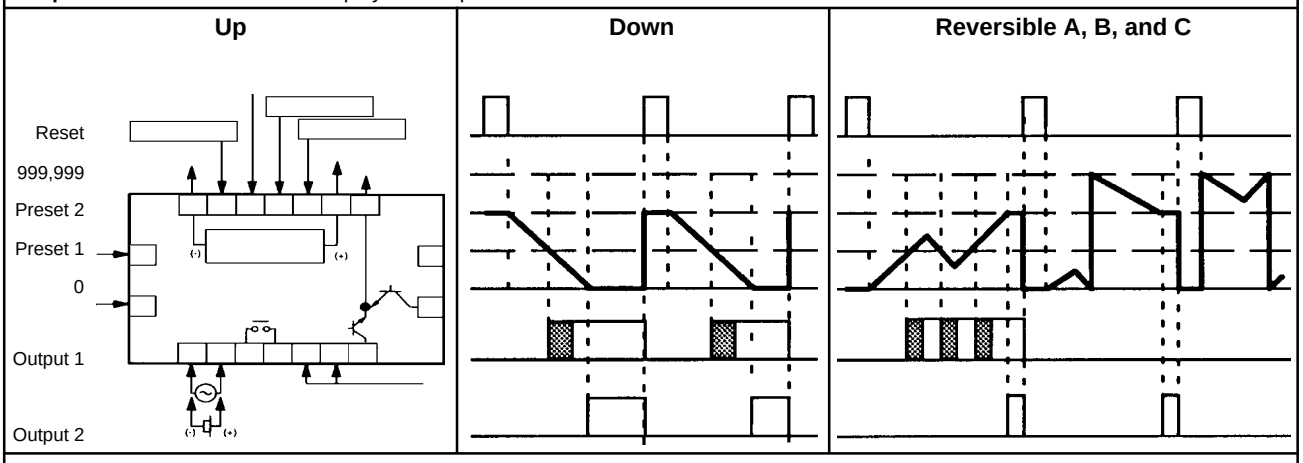

Output Mode F Present value runs continuously. Outputs are maintained until reset.

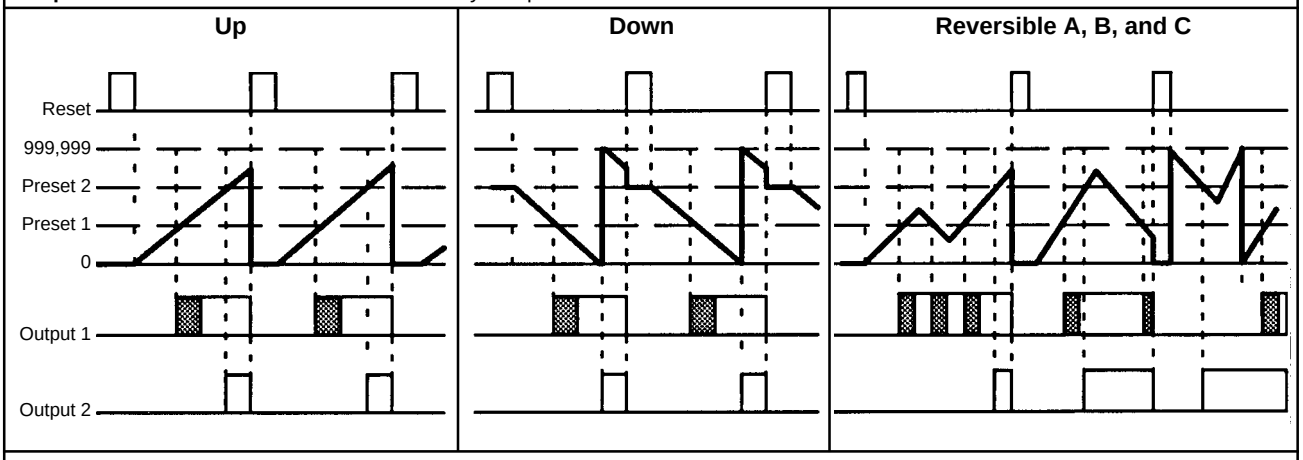

Output Mode C Present value is placed in reset start status as soon as preset count is reached; the preset is not actually displayed. Outputs are one-shot and operate repeatedly. Output 1 is latches ON, and goes OFF after expiration of the one-shot period for Output 2. One-shot time periods for Output 1 and 2 are independent.

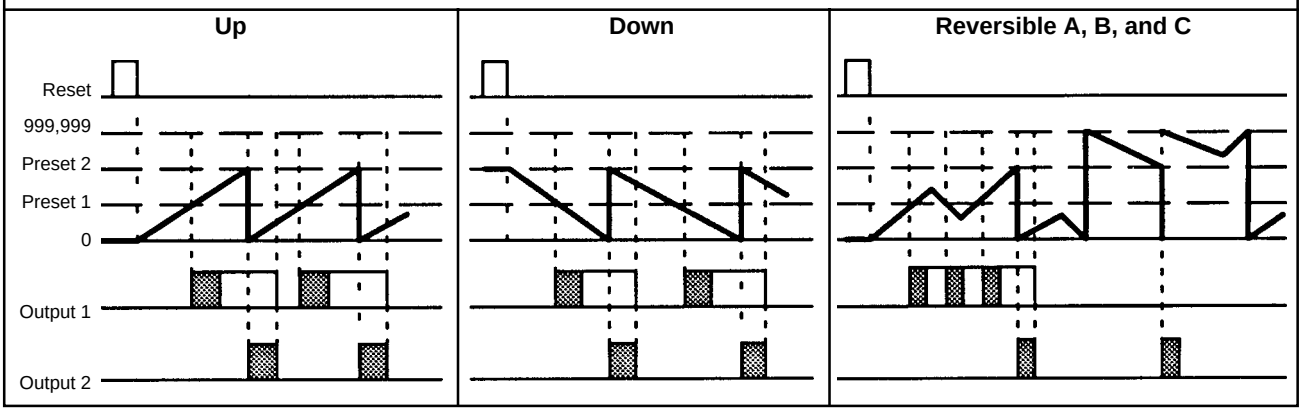

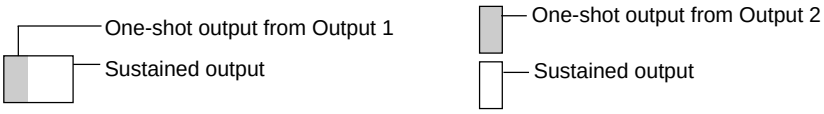

One-shot outputs can be set to 10, 50, 100, 200 or 500 ms.

Standard Counter Output Operation (Continued)

(Bold line represents present value; Output 2 operation applies for single-preset models.)

Output Mode R Present value display returns to reset start status after expiration of one-shot time period. Outputs are one-shot and operate repeatedly. Output 1 latches ON at preset 1, and goes OFF after expiration of the one-shot period for Output 2. One-shot time periods for Output 1 and 2 are independent.

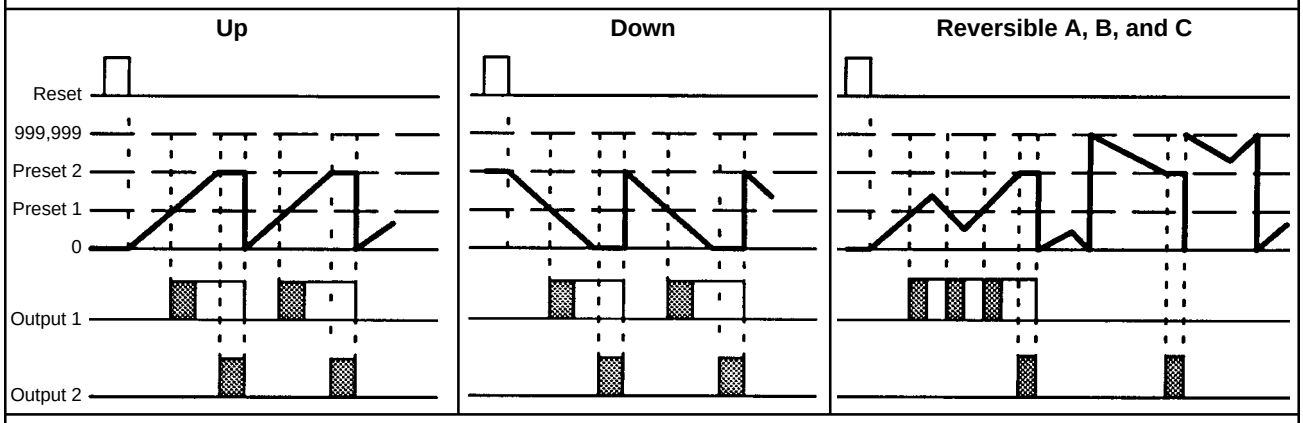

Output Mode K Present value runs continuously. Output 1 latches ON at preset 1, and goes OFF after expiration of the one-shot period for Output 2. One-shot time periods for Output 1 and 2 are independent.

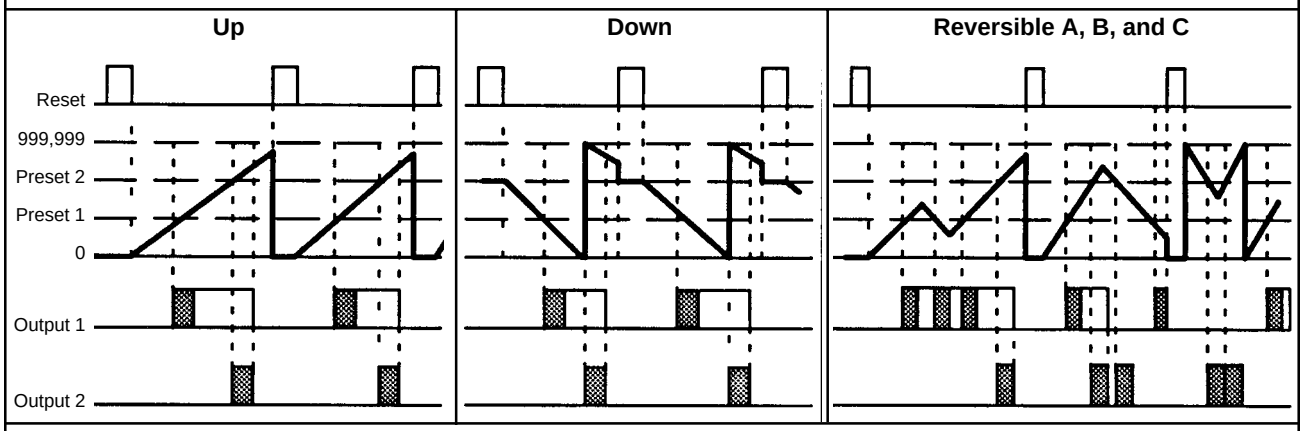

Output Mode P Present value display does not change during one-shot time period, but reset start status returns as soon as preset count is reached. Outputs are one-shot and operate repeatedly. Output 1 latches ON at preset 1, and goes OFF after expiration of the one-shot period for Output 2. One-shot time periods for Output 1 and 2 are independent.

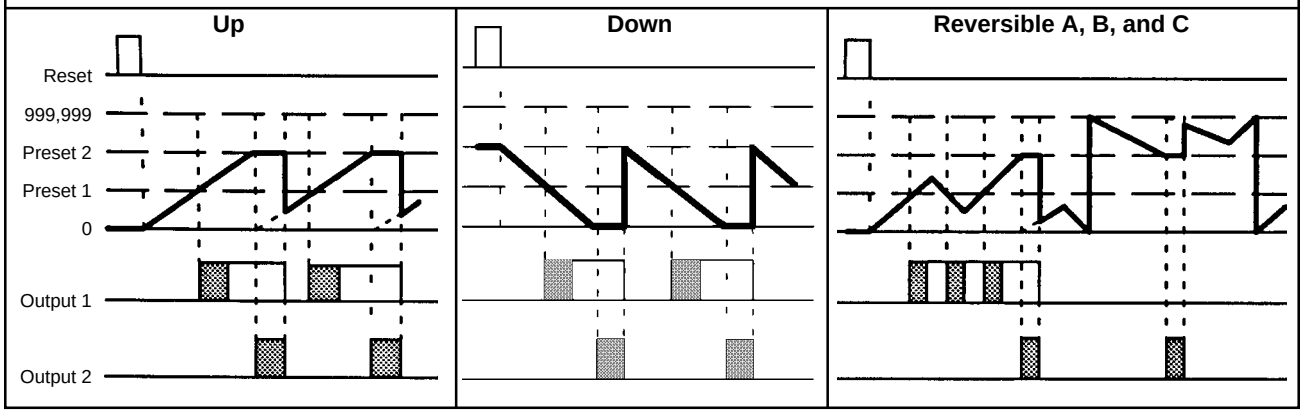

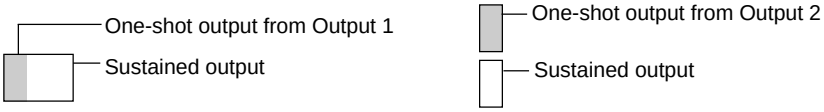

One-shot outputs can be set to 10, 50, 100, 200 or 500 ms.

Standard Counter Output Operation (Continued)

(Bold line represents present value; Output 2 operation applies for single-preset models.)

Output Mode Q Present value runs continuously through one-shot time period and returns to reset start status immediately afterward. Outputs are one-shot and operate repeatedly. Output 1 latches ON at preset 2, and goes OFF after expiration of the one-shot period for Output 2. One-shot time periods for Output 1 and 2 are independent.

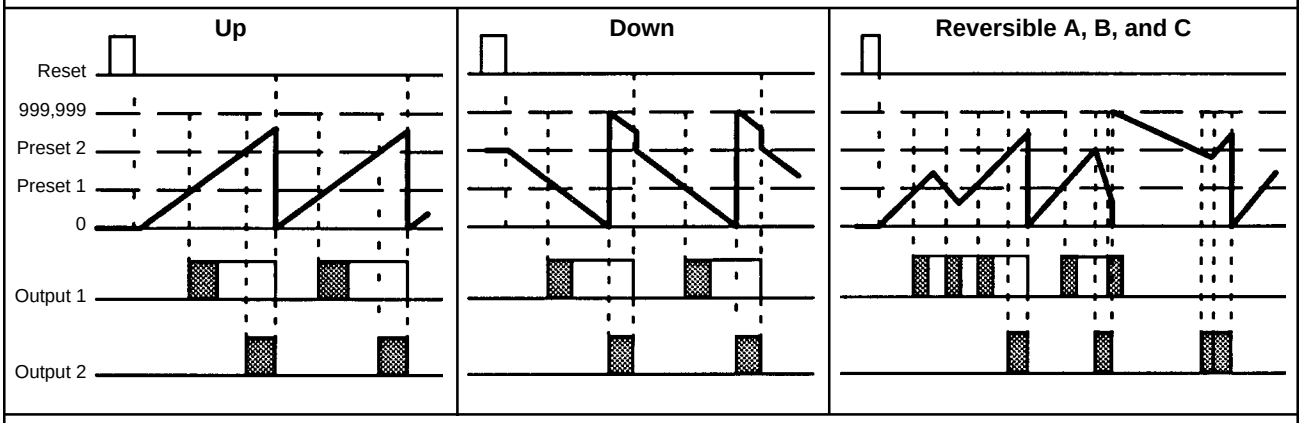

Output Mode A Present value and Output 1 maintain status until reset. Output 1 and 2 operate independently.

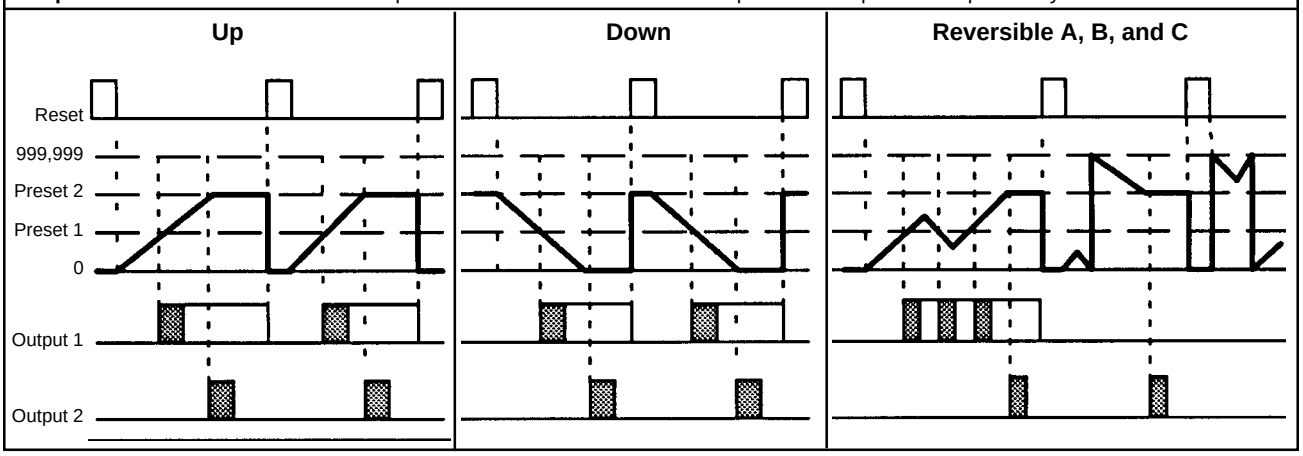

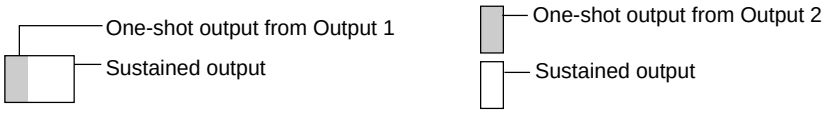

One-shot outputs can be set to 10, 50, 100, 200 or 500 ms.

■ H7CR-C REVERSIBLE +/– RANGE COUNTER OUTPUT OPERATION

(Bold line represents present value; Output 2 operation applies for single preset models.)

Output Mode K Present value increments and decrements within displayable range. Output 1 goes ON for one-shot whenever present value is equal to preset 1; Output 2 goes ON for one-shot whenever present value is equal to preset 2.

Reversible A, B, and C

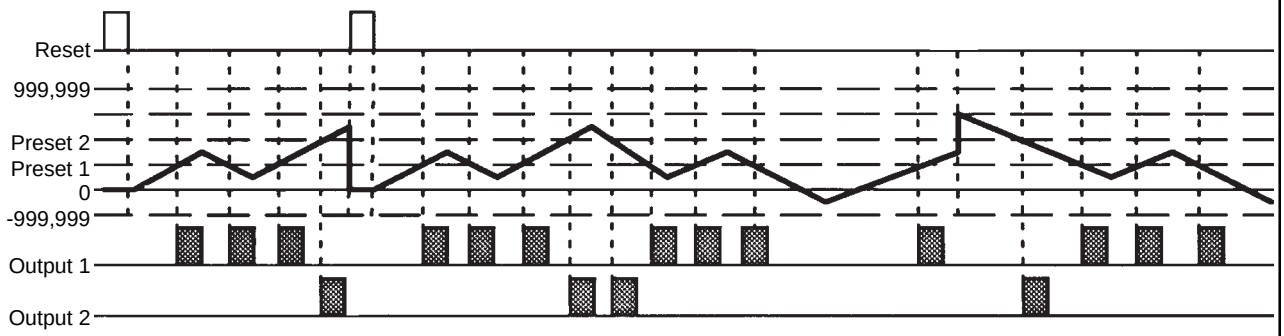

Output Mode D Present value increments and decrements within displayable range. Output 1 is ON whenever present value is equal to preset 1; Output 2 is ON whenever present value is equal to preset 2.

Reversible A, B, and C

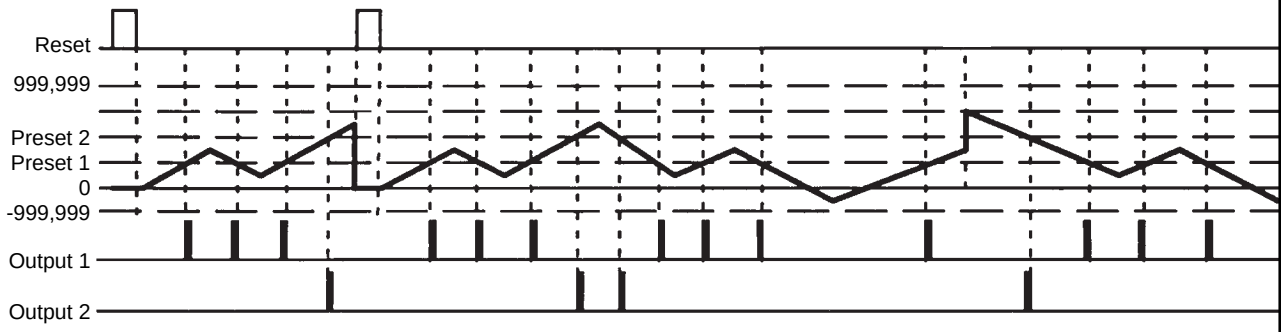

Output Mode L Present value increments and decrements within displayable range. Output 1 is ON whenever present value is less than or equal to preset 1; Output 2 is ON whenever present value is greater than or equal to preset 2.

Reversible A, B, and C

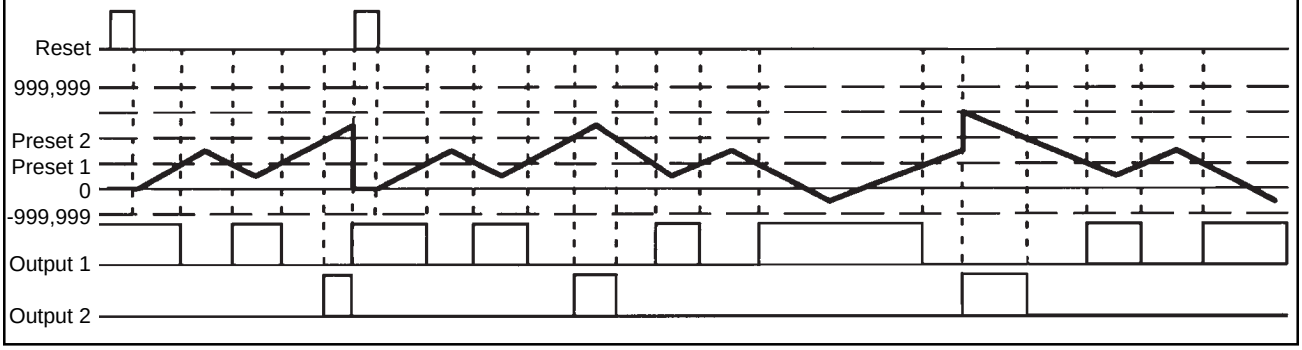

One-shot output

Instantaneous (equals) output

Sustained output/level input

One-shot outputs can be set to 10, 50, 100, 200 or 500 ms.

+/– Range Counter Output Operation (Continued)

(Bold line represents present value; Output 2 operation applies for single preset models.)

Output Mode H Present value increments and decrements within displayable range. Output 1 is ON whenever present value is greater than or equal to preset 1; Output 2 is ON whenever present value is greater than or equal to preset 2.

Reversible A, B, and C

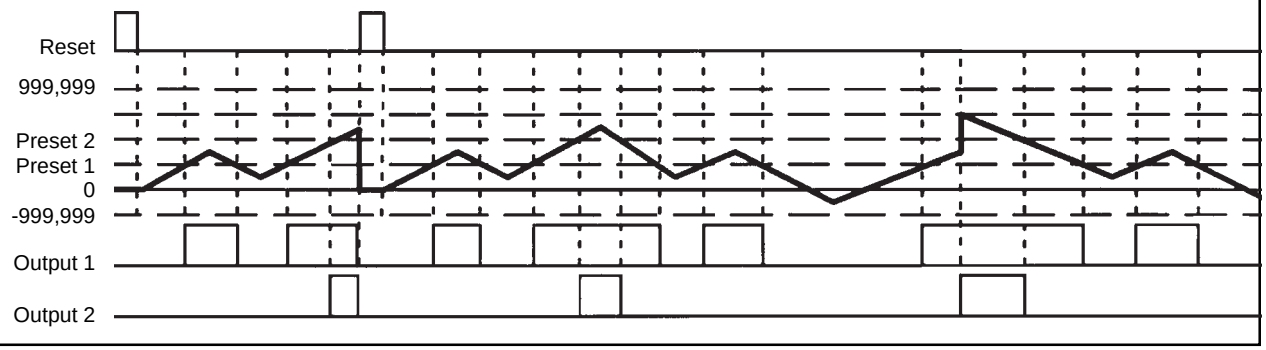

One-shot output

Instantaneous (equals) output

Sustained output/level input

One-shot outputs can be set to 10, 50, 100, 200 or 500 ms.

Notes

Counting inputs are not acknowledged while the reset input is ON.

The compensation input is valid only when the present value is being incremented.

One-shot outputs, when ON, are turned OFF when the reset input goes ON, but are left ON for the one-shot time period when the compensation inputs goes ON. One-shot outputs, when ON, are reset and the one-shot output is restarted if a preset designating the output is reached.

Dimensions

Unit: mm (inch)

■ COUNTERS

H7CR-A, H7CR-B and H7CR-C

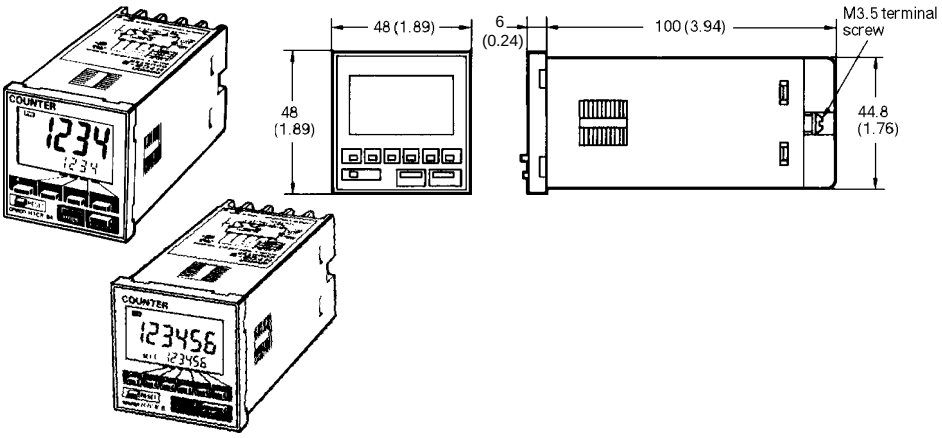

Panel cutout

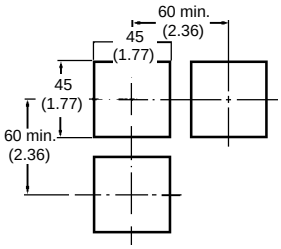

H7CR-S□ Short Body

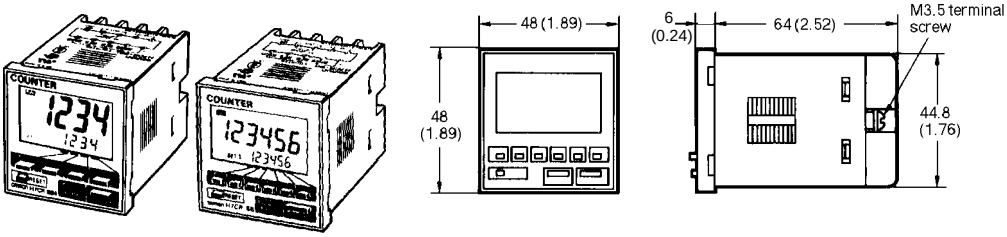

H7CR-8□, H7CR-11 Socket-Mount Types

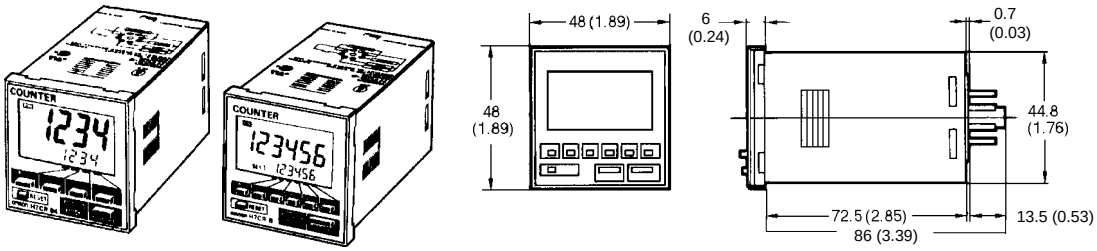

Track and surface mounting height

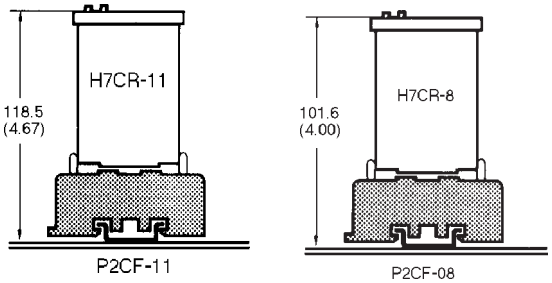

Panel mounting depth

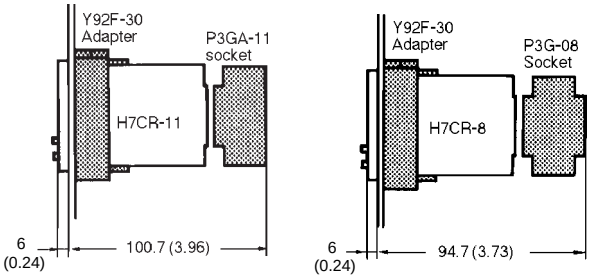

■ SOCKETS

11-Pin Sockets for H7CR-11□

P2CF-11 Bottom surface or track mounting socket

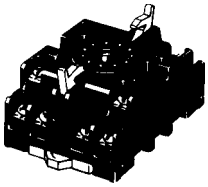

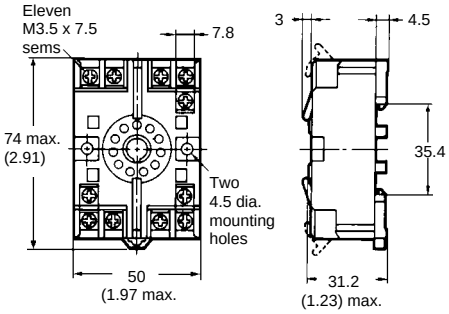

Terminal arrangement

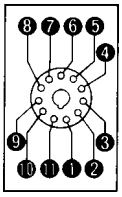

Mounting holes

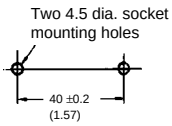

P3GA-11 Back mounting socket

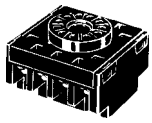

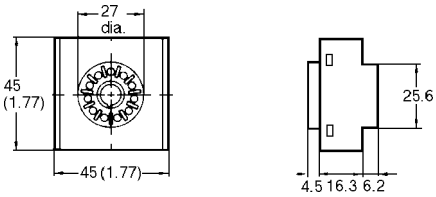

Terminal arrangement

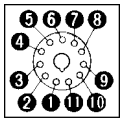

8-Pin Sockets for H7CR-8□

P2CF-08 Bottom surface or track mounting socket

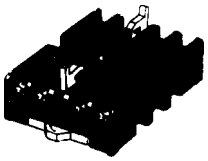

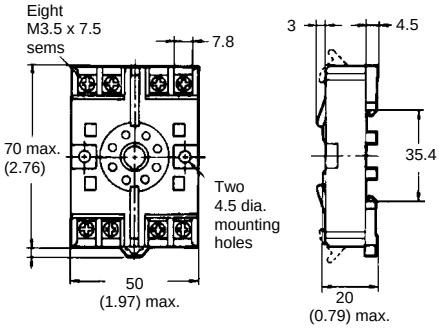

Terminal arrangement

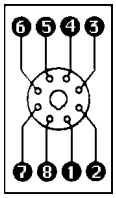

Mounting holes

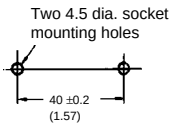

SOCKETS (Continued)

P3G-08 Back mounting socket

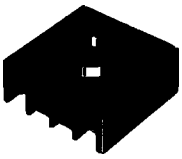

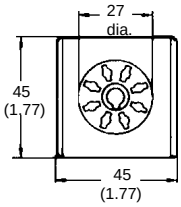

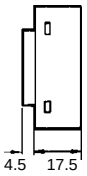

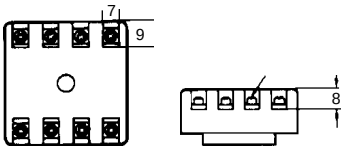

Terminal arrangement

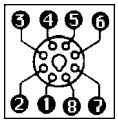

(Bottom view)

■ MOUNTING TRACK AND ACCESSORIES

PFP-50N, PFP-100N DIN Rail Track

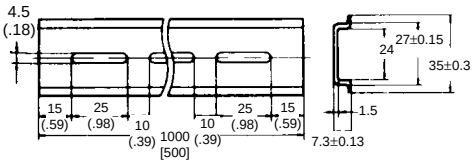

PFP-M End Plate

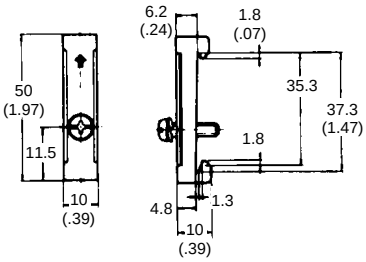

Y92A-48F1 Soft Plastic Cover

Two mounting clips help the soft plastic cover Y92A-48F1 fit snugly over the front of the timer to protect against dirt and water. Timer settings can be changed when the cover is on. The cover is intended for use in areas where unusual service conditions do not exist.

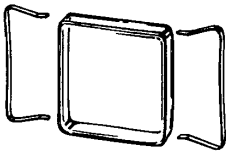

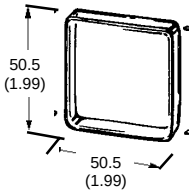

Y92A-48T Terminal Cover

The terminal cover protects wiring connections on the Standard and Short Body models.

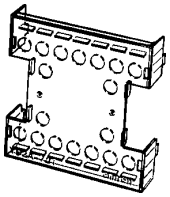

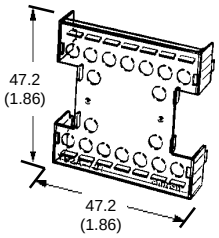

■ PANEL MOUNTING ADAPTER Y92F-30

Panel mounting adapter Y92F-30 is supplied with each counter. Installation instructions are on the next page.

H7CR-A, H7CR-B and H7CR-C

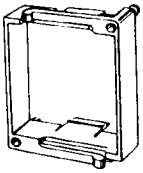

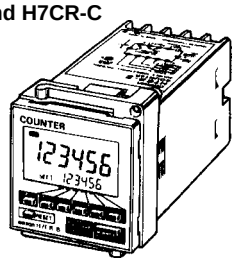

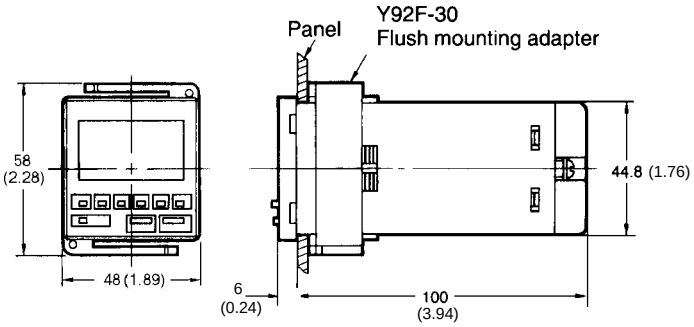

H7CR-S

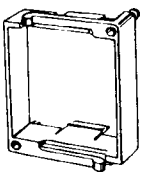

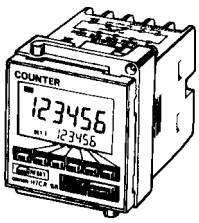

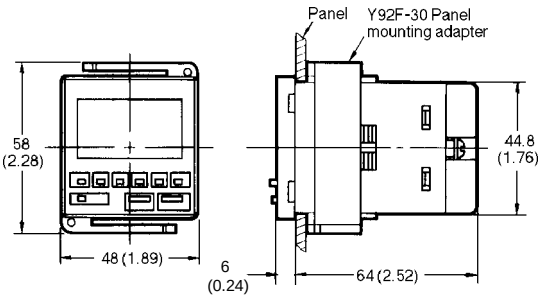

H7CR-8□, H7CR-11

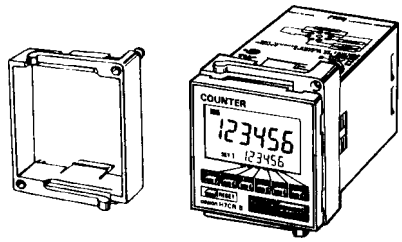

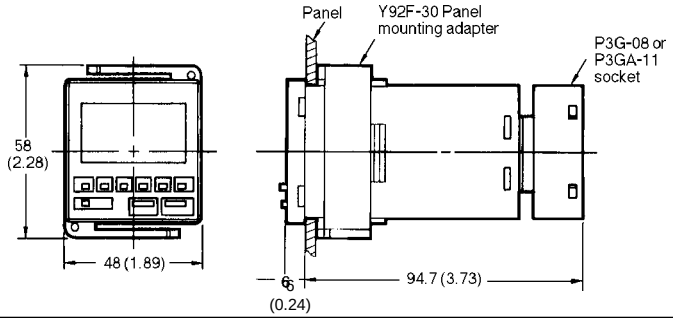

Panel Mounting H7CR Counters

Insert the counter through the panel cutout. Push the Y92F-30 adapter from the rear of the counter as far forward toward the panel as possible. Then, tighten the two retaining screws. To release the adapter, lift the tab at the rear of the adapter.

Several counters may be mounted close together using Y92F-30 adapter as shown here. When mounting two or more counters in a vertical line, arrange the adapters so that their molded tabs are positioned on the right and left sides. When mounting two or more counters in a horizontal line, arrange the adapters so that their molded tabs are positioned on the top and bottom sides.

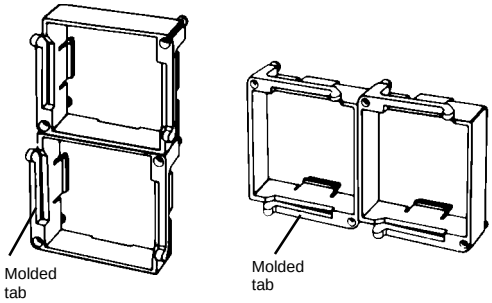

Panel cutout for side-by-side mounting of two counters

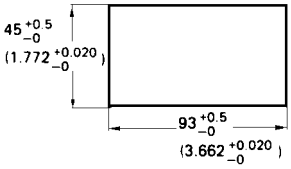

Connections

■ H7CR-□A SERIES (ECONOMY)

Single Preset Contact Output

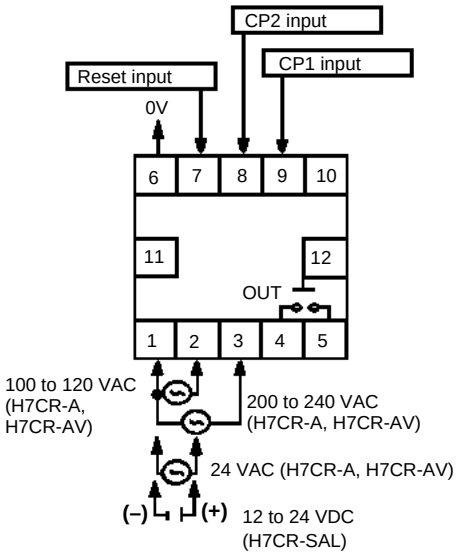

Single Preset Transistor (NPN) Output

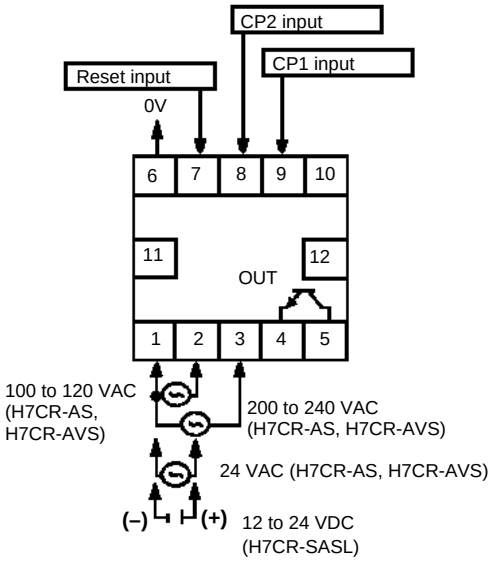

■ H7CR-□B (STANDARD) AND H7CR□-C (REVERSIBLE +/–) SERIES

Single Preset Contact Output

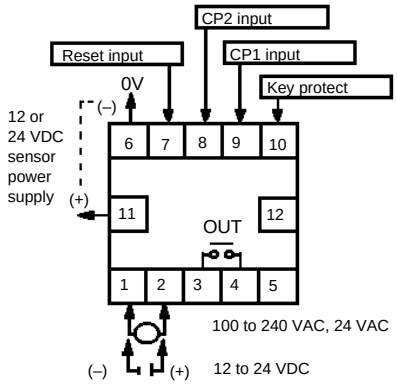

Applicable models include the following:

H7CR-B	H7CR-BG	H7CR-SBL, -SB4L
H7CR-BV	H7CR-BVG	H7CR-SCL
H7CR-C	H7CR-CG	H7CR-B4
H7CR-CV	H7CR-CVG	H7CR-B4G

Double Preset Contact Output

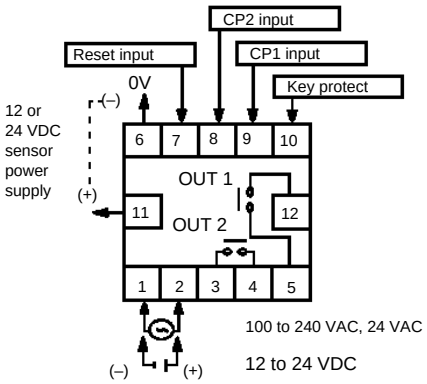

Applicable models include the following:

H7CR-BW	H7CR-BWG	H7CR-B4W
H7CR-BWV	H7CR-BWVG	H7CR-B4WG
H7CR-CW	H7CR-CWG	
H7CR-CWV	H7CR-CWVG	

Single Preset Transistor (NPN) Output

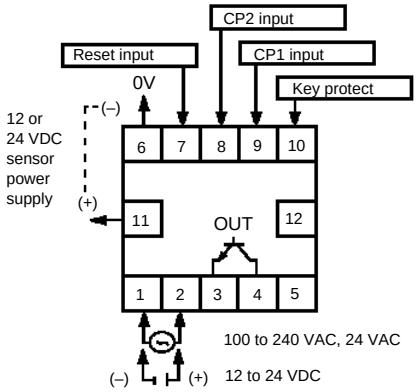

Applicable models include the following:

H7CR-BS	H7CR-BSG	H7CR-SBSL
H7CR-BVS	H7CR-BVSG	H7CR-SCSL
H7CR-CS	H7CR-CSG	
H7CR-CVS	H7CR-CVSG	

Double Preset Transistor (NPN) Output

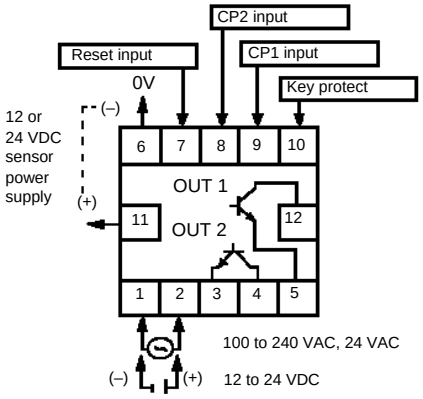

Applicable models include the following:

H7CR-BWS	H7CR-BWSG	H7CR-SBWSL
H7CR-BWVS	H7CR-BWVSG	H7CR-SCWSL
H7CR-CWS	H7CR-CWSG	
H7CR-CWVS	H7CR-CWVSG	

■ H7CR-8, H7CR-11 SOCKET-MOUNT STANDARD TYPES

Single Preset H7CR-8, H7CR-84, H7CR-8S

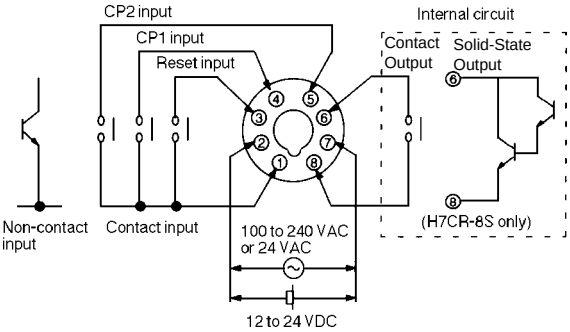

Single Preset with Memory Backup H7CR-11, H7CR-11S

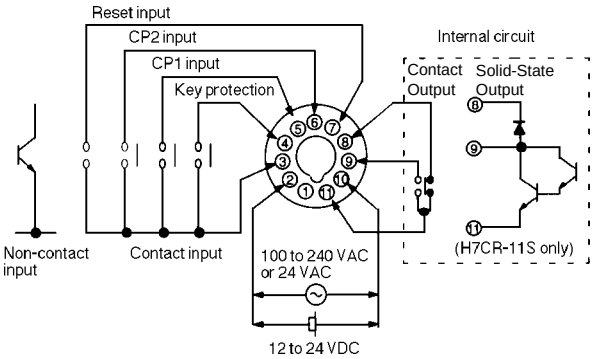

■ CONNECTIONS

The inputs of the H7CR are non-voltage (short circuit or open) inputs and voltage inputs. (Non-voltage inputs only H7CR-S, -8 and -11.)

Non-voltage inputs

Solid-State Input (NPN transistor)

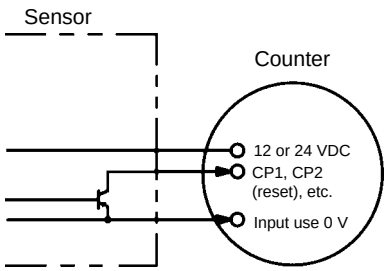

Solid-State Input (NPN output sensor powered by built-in DC power source)

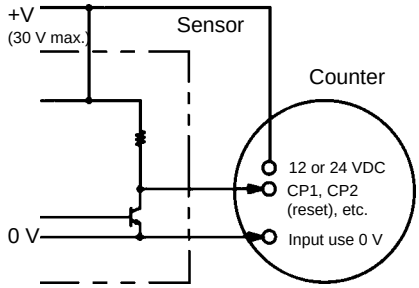

Contact Input

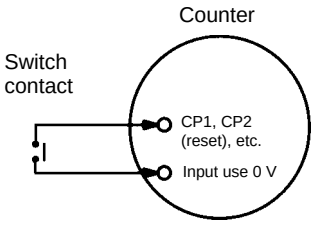

Input signal	Ratings
Non-contact input	High level when transistor is ON Residual voltage: 2 V max. Impedance when ON: 1 kΩ max.
	Low level when transistor is OFF Impedance when OFF: 100 kΩ max.
Contact input	Use contacts capable of switching 2 mA at 5 VDC

Voltage inputs

Solid-State Input (NPN transistor)

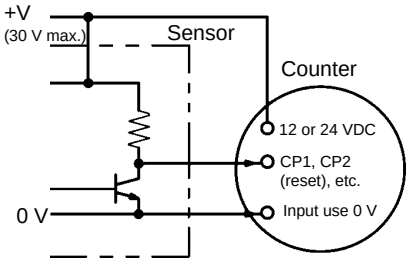

Solid-State Input (PNP transistor)

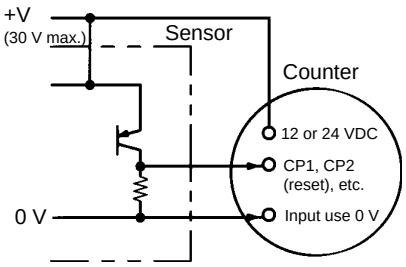

Contact Input

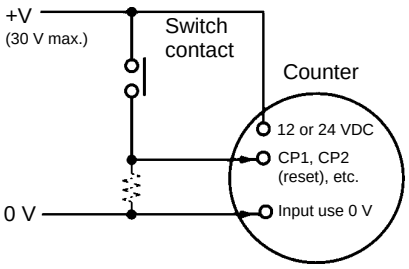

Input signal	Ratings
Voltage input	High level when transistor is ON: 4.5 to 30 VDC
	Low level when transistor is OFF: 0 to 2 VDC
Contact input	Use contacts capable of switching 2 mA at 5 VDC

Rotary encoder input

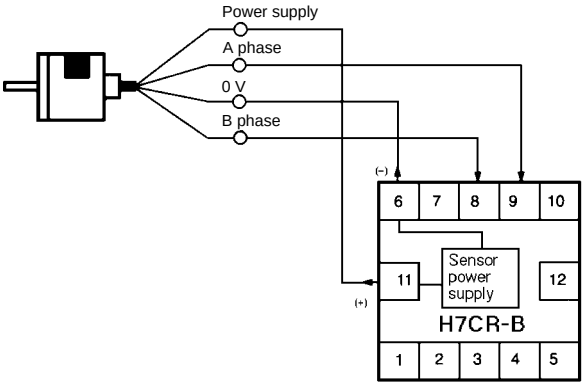

Operation

■ NOMENCLATURE

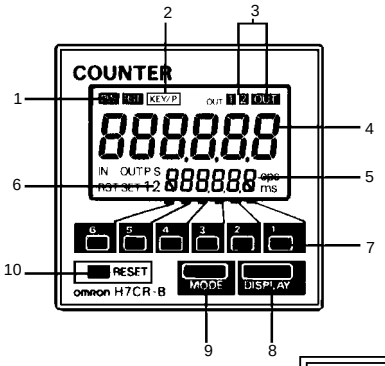

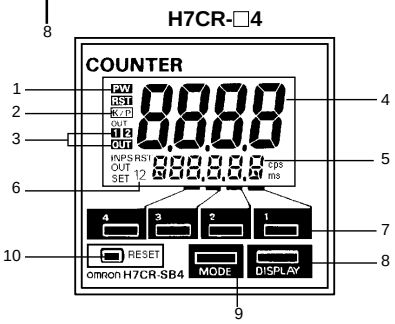

Key	Description
1	Power indicator
2	Key protection indicator
3	Control output indicator: displays "OUT" for single preset counters, displays "OUT1" or "OUT2" for double preset counters
4	Present value display, leading zeroes suppressed
5	Set value display indicates data in function setting mode
6	Set value indicator identifies preset 1 or preset 2
7	Increment keys 1 to 6 (1 to 4) change the corresponding digit of the set value when the counter is in the function setting mode. Increment key 6 on H7CR-C and H7CR-SC also can be used to designate + or – value.
8	Display key switches to the setting displays. For double preset counters, it switches between set values 1 and 2.
9	Mode key switches from run mode to function setting mode. Changes items in the function setting mode.
10	Reset key resets the present value and outputs.

■ OPERATIONAL INTERVIEW

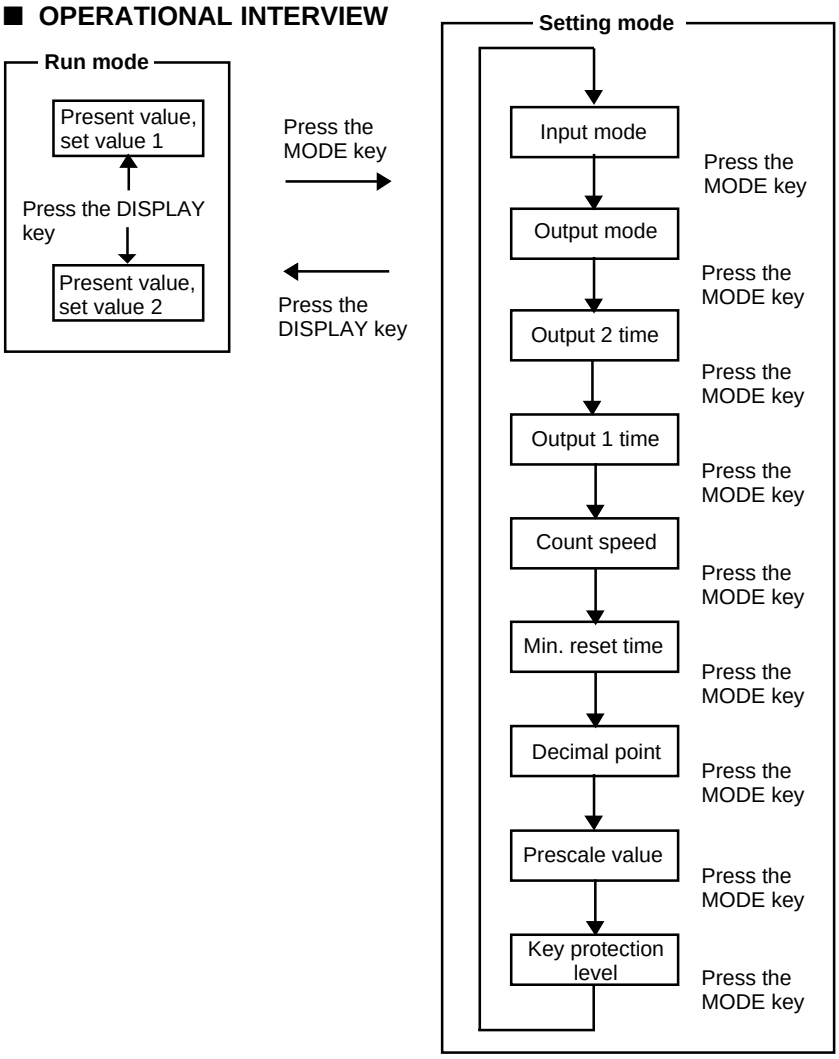

■ FACTORY SETTINGS

The following settings are made at the factory. Be sure to change any settings before operating the counter. Settings and display are possible with or without power supplied, although power supply is required for inputs and outputs to operate.

Outputs are not possible with the presets set to zero. The display and settings are powered by an internal battery so they are unaffected by external power interruptions.

H7CR-A, H7CR-B, H7CR-C

Model	H7CR-A (Economy type)	H7CR-B (Standard type)	H7CR-C (+/– Range type)
Present value	0	0	0
Presets	0	0	0
Input modes	Up	Up	Reversible C (phase difference)
Output mode	N	N (hold outputs on preset 1 for double preset)	K
Output 2 time	HOLD	HOLD	500 ms
Output 1 time	—	HOLD	500 ms
Counting speeds	30 cps	30 cps	30 cps
Min. reset time	20 ms (not adjustable)	20 ms	20 ms
Decimal point	Not applicable	Far right (no fractions)	Far right (no fractions)
Scale factor	1.000 (not adjustable)	1.000	1.000
Key protection level	—	KP-1	KP-1

H7CR-S, H7CR-8, H7CR-11

Model	H7CR-A (Economy type)	H7CR-B (Standard type)	H7CR-C (+/– Range type)	H7CR-8, -11 (Socket)
Present value	0	0	0	0
Presets	0	0	0	0
Input modes	Up	Up	Reversible C (phase difference)	Up
Output mode	N	N (hold outputs on preset 1 for double preset)	K	N
Output 2 time	HOLD	HOLD	500 ms	HOLD
Output 1 time	—	HOLD	500 ms	—
Counting speeds	30 cps	30 cps	30 cps	30 cps
Min. reset time	20 ms (not adjustable)	20 ms	20 ms	20 ms
Decimal point	Not applicable	Far right (no fractions)	Far right (no fractions)	Far right (no fractions)
Scale factor	1.000 (not adjustable)	1.000	1.000	1.000
Key protection level	—	KP-1	KP-1	KP-1 (H7CR-11 only)

■ SUMMARY OF SETTING PROCEDURES

Settings and operation are easily achieved as shown below. The settings that are possible for each model vary. After changing modes, the counter is ready to accept setting changes to default items.

Run Mode

Item	Applicable Counters	Description	Setting values
Preset 1, Preset 2 set value	H7CR-B, H7CR-SB H7CR-C, H7CR-SC	Determine the timing of the outputs in comparison to the present count value according to the output mode. The DISPLAY key switches between set value 1 and 2 in double preset models. Use the increment keys (1 to 6) to change a digit.	Sequence when changing a digit using the increment keys (1 to 6). 0 → 1 → ····· → 8 → 9 → C] Minus sign displayed for leftmost digit of H7CR-C and H7CR-SC (+/– range counters) by using increment key 6.

Setting Mode

Item	Applicable Counters	Description	Setting values
Input mode (default)	H7CR-A, H7CR-SA H7CR-B, H7CR-SB H7CR-C, H7CR-SC H7CR-8, H7CR-11	Determines the input mode: Up, Down, Reversible A, Reversible B, Reversible C Press the Up key until the desired mode is displayed.	Increment keys 1 to 6 change the display. U* → d* → Ud-A → Ud-b → Ud-C Up Down Reversible A Reversible B Reversible C *There is no Up or Down mode for H7CR-C and H7CR-SC (+/– range) counters.
Output mode and OUT 2 output time	H7CR-A, H7CR-SA H7CR-B, H7CR-SB H7CR-C, H7CR-SC H7CR-8, H7CR-11	Determines the operation of the control outputs. Refer to "Output Operations" tables for details. Also determines the output time for control output (OUT2) in single preset counters.	Increment keys 1 to 6 change output mode. H7CR-A, -SA n → F (N) (F) H7CR-B, -SB, -8, -11 n → F → C → r → k → P → Q → A (N) (F) (C) (R) (K) (P) (Q) (A) H7CR-C, -SC k → d → L → H* (K) (D) (L) (H) 2-stage model only. Press keys 1 to 6 to change the Output 2 time. (Applicable to output modes C, R, K, P, Q, and A only. 10ms → 50ms → 100ms → 200ms → 500ms
OUT 1 output time	H7CR-B, H7CR-SB H7CR-C, H7CR-SC (double preset models only)	Designates the output time for output 1 (double preset models only). Press the increment keys to set the desired time for output 1.	Increment keys 1 to 6 change output time. HoLd* → 10ms → 50ms → 100ms → 200ms → 500ms *Hold mode is available only on H7CR-BW and H7CR-SBW counters. (Applicable to output modes C, R, K, P, Q, and A only.)
Counting speed	H7CR-A, H7CR-SA H7CR-B, H7CR-SB H7CR-C, H7CR-SC H7CR-8, H7CR-11	Changes the input filter for counting inputs. Used to prevent counting errors caused by input interference. Press the increment keys to set the desired speed. A "k" on the display indicates kilocycles (1000 cycles).	Increment keys 1 to 6 change count speed. 30 → 1k → 5k (30cps) (1kcps) (5kcps)
Minimum reset times	H7CR-B, H7CR-SB H7CR-C, H7CR-SC H7CR-8, H7CR-11	Determines the minimum time required for the reset input. Press any increment key to switch between 1 and 20 ms.	Increment keys 1 to 6 change reset time. 1 ms 1 ↔ 20 20 ms

Note: Settings changed in the Setting mode are effective only after returning to the Run mode.

Setting Mode continued

Item	Applicable Counters	Description	Setting values
Decimal point	H7CR-B, H7CR-SB H7CR-C, H7CR-SC H7CR-8, H7CR-11	Determines the position of the decimal point on the display. Press the Increment keys 1 to 6 to move the decimal from left to right.	Increment keys 1 to 6 move decimal point. 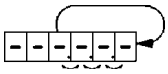
Scale factor	H7CR-B, H7CR-SB H7CR-C, H7CR-SC H7CR-8, H7CR-11	Used to convert counts to other units, (e.g., to display millimeters when each input pulse represents 0.02 mm, input a scale factor of 0.02). Values from 0.001 to 99.999 are possible. Press the Increment keys to set the desired value.	Increment keys 1 to 5 change the scaling 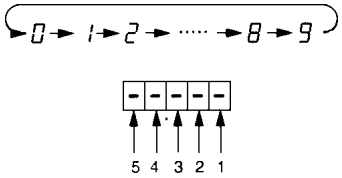
Key protection level	H7CR-B, H7CR-SB H7CR-C, H7CR-SC H7CR-11	Blocks certain keys to prevent accidental operation. The key protection level, kP-1 to kP-4, determines which keys are locked out when the key protection input is ON. The locked keys are crossed out in the diagrams at right.	Increment keys 1 to 4 change key protection level. 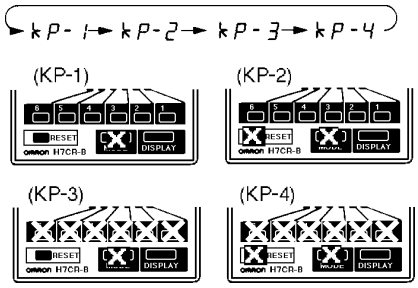

Note: Settings changed in the Setting mode are effective only after returning to the Run mode.

■ EXAMPLES

Run Mode

Changing the Set Value

When changing the set value while the counter is operating, an output will be produced if the set value ever equals the present value. To avoid triggering the output, begin by setting a higher digit to a larger number.

1. Press the DISPLAY key to change the displayed values for preset 1 and 2 during operation.

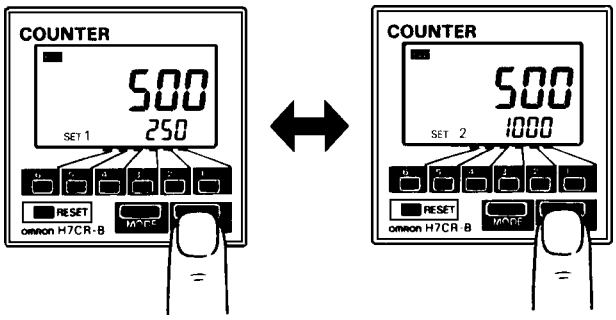

2. Change the set value from 250 to 1,250.

   Pressing increment keys 1 to 6 advances the corresponding column value by 1.

   Nonsignificant zeros are not normally shown on the set value display.

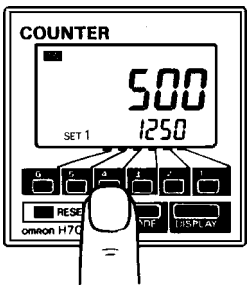

Output Delay

The following table shows the delay from when the present value passes the set value until the output is produced. The delay is the result of output control time, signal transmission time, relay switching time etc.

Actual measurements in N and K modes:

Control output	Max. counting speed	Output delay*
Contact	30 cps	18 to 24 ms
OUT1,	1 kcps	4.7 to 5.8 ms
OUT2	5 kcps	4.4 to 5.4 ms
Transistor	30 cps	13.5 to 20 ms
OUT1,	1 kcps	0.59 to 0.81 ms
OUT2	5 kcps	0.29 to 0.44 ms

* The variation in delays is due to different modes and conditions. For systems where the delay is a problem, take actual measurements under operating conditions.

Setting Mode

Changing Setting in the Function Setting Mode

1. Press the MODE key to switch from RUN mode to SETTING mode.

   The counter will continue operation if switched from RUN mode to function setting mode during operation.

   The MODE key will be locked if the key protection function is enabled.

   Settings changed in the function setting mode are not effective until RUN mode is entered. As the operating conditions will change in this case, always reset operation with the RESET key or a reset input.

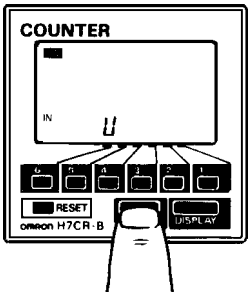

2. Press the MODE key to scroll successively through the items that can be set. Release the MODE key to select the desired item.

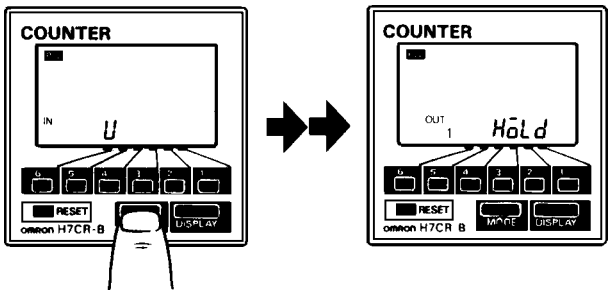

3. Changing the counting speed or another selected item:

   Press the MODE key until the desired item appears.

   Change the item setting by pressing increment keys 1 to 6.

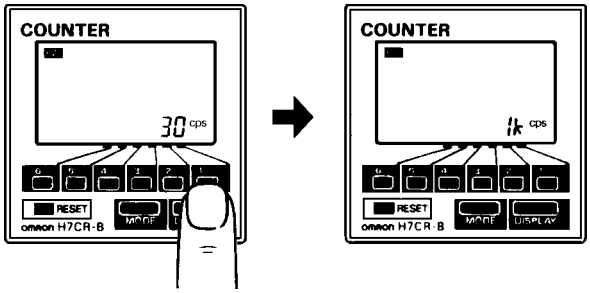

Press the DISPLAY key to return to RUN mode from SETTING mode.

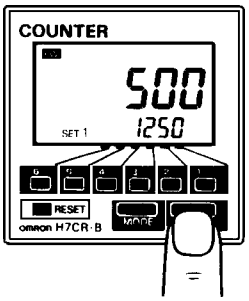

Precautions

■ EXTERNAL POWER SUPPLY

The capacity of the counter's external power supply is 50 mA at 24 VDC or 100 mA at 12 VDC. For models with 24 VAC/12 to 24 VDC specifications, loads must be established between the following limits.

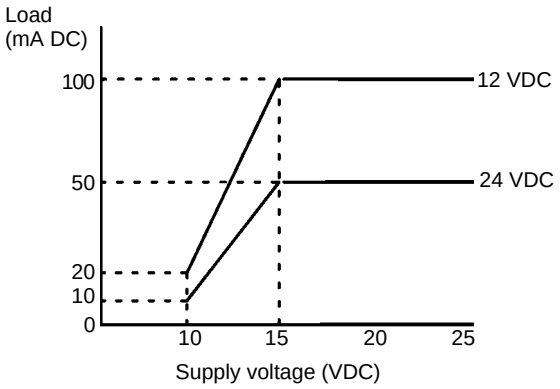

■ POWER SUPPLY

When the power turns OFF then ON, the input signal may or may not be received. The diagram below shows when the input signal will be received, will not be received or will be unstable. The unstable period will vary with power supply voltage, and the load conditions on external power supplies.

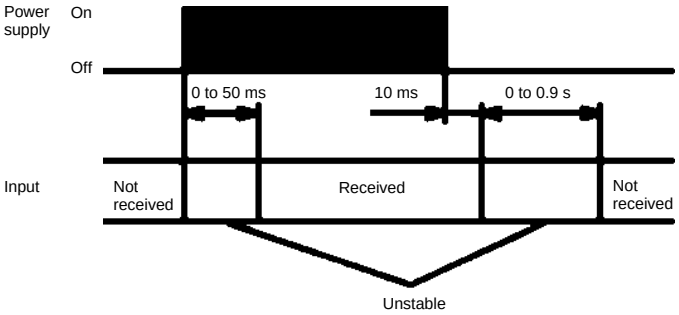

For 100 to 240 VAC and 24 VAC/12 to 24 VDC counters, be sure that the capacity of the external power supply is adequate, because the power supply may not provide a surge current sufficient to start the counter due to the switching regulator contained in the counter's internal circuitry.

Connect the power supply voltage through a relay or switch in such a way that the voltage reaches a fixed value immediately.

■ TRANSISTOR OUTPUT

The transistor output in H7CR counters is optically isolated from the internal circuitry by a photocoupler, so either NPN or PNP output is possible.

■ SELF DIAGNOSTIC FUNCTIONS

The displays at right appear when irregularities occur. When the problems causing these conditions have been cleared, the preset count value and all outputs will be reset in the same way as when the Reset key is pressed.

Display	Meaning	Outputs	Recovery
– – – –	Present value below minimum	Not changed.	Press RESET key for 1 second or reset input.
FFFFFF	Present value above maximum		
E1	CPU error	OFF	Press RESET key for 1 second.
E2	Memory error		

– – – –: Displayed for +/– range counters H7CR-C and H7CR-SC when max. negative value is exceeded.
FFFFFF: Displayed for +/– range counters H7CR-C and H7CR-SC when max. positive value is exceeded.

■ OPERATING ENVIRONMENT

Although the front of the counter resists water and oils and can be used where subject to these, extended exposure to large amounts of either can adversely affect internal components.

The counter, input signal lines, and the input device must be separated as far as possible from any sources of electrical noise, such as high-voltage power lines. Shielded input signal lines can also be effective in suppressing noise.

To prevent damage, the exterior of the counter must not be exposed to organic solvents (e.g., paint thinner or benzene), strong alkalis, or strong acids.

■ OTHER

Always isolate the counter from external circuits or short all terminals before measuring dielectric strength between electric circuits and non-charged metal parts or performing similar testing with the counter mounted in a control panel. This is to prevent internal circuit damage that might occur if the test voltage enters the counter interior due to withstand-voltage or insulation failure in control panel devices.

The counter contains a lithium battery, and must never be incinerated. Dispose of the counter as a noncombustible item.

Applications of Operating Modes

■ SINGLE OPERATING MODES

Single operating modes are basic modes, among which, Mode N is the most basic (input the RESET signal to restart).

Mode N
The displayed count-up value is on hold.

Example: Cutting Objects to Specified Size
The object is advanced for a specified distance measured by encoder pulses to determine correct length for cutting.

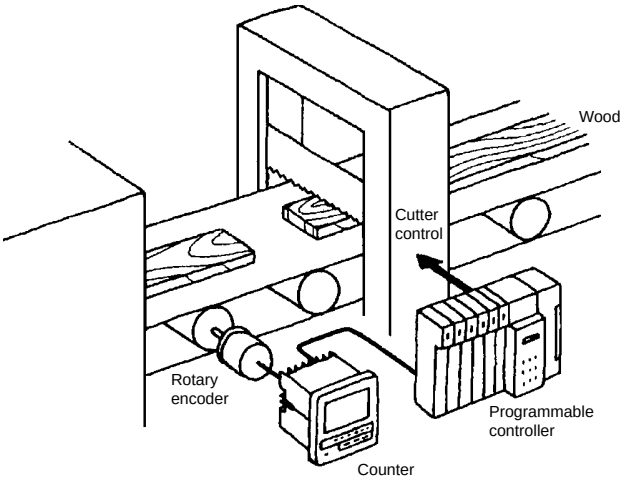

Mode A
Select Mode A for a one-shot output of the count-up signal used in Mode N. The displayed count-up value is on hold. Mode A can be used for a start signal for sequence control equipment.

Mode F
Go to Mode F to monitor the number of overrun objects. The process value is displayed normally. It is possible to monitor the number of overrun objects upon interruption of the operation after a specified number of objects are counted.

Mode K
Select Mode K for the one-shot output of the count-up signal used in Mode F. Mode K can be used as a start signal for sequence control equipment.

■ REPETITIVE OPERATING MODES

Modes R and C are typical of repetitive operating modes (the counter internally resets itself after each counting operation and then restarts). The counter begins the next counting operation after the present output is processed.

Mode R
The displayed count-up value is on hold.

Example: Portion Control of Material or Ingredients
The valve is closed when the supplied quantity of cookie batter or blended ingredient has reached a specified amount.

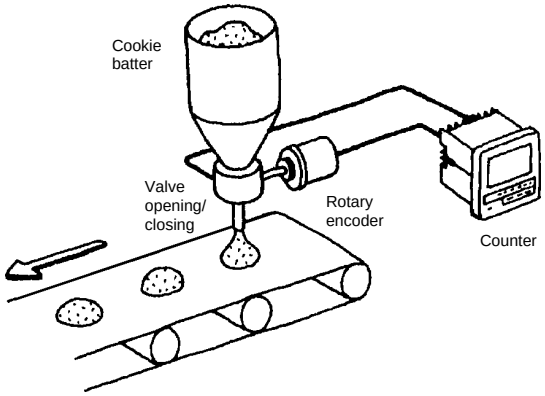

Mode Q
Choose Mode Q to view the process value continuously. There is no difference in operation between Mode R and Mode Q.

Mode C
The counting operation restarts upon counting up. The process value is displayed continuously.

Example: Marking Material at Regular Intervals
A roll of film being advanced is marked at regular intervals based on encoder input.

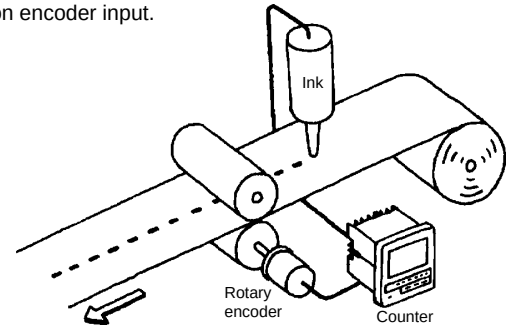

Mode P
Choose Mode P to put the count-up value on hold (display is on hold while the one-shot output is ON). There is no difference in operation between Mode C and Mode P.

NOTE: DIMENSIONS SHOWN ARE IN MILLIMETERS. To convert millimeters to inches, divide by 25.4.

Omron Europe B.V. EMA-ISD, tel:+31 23 5681390, fax:+31 23 5681397, http://www.eu.omron.com/ema

Cat. No. GC CN4A 6/98/26M Specifications subject to change without notice. Printed in the U.S.A.

Общество с ограниченной ответственностью «МосЧип» ИНН 7719860671 / КПП 771901001
Адрес: 105318, г.Москва, ул.Щербаковская д.3, офис 1107

Данный компонент на территории Российской Федерации

Вы можете приобрести в компании MosChip.

Для оперативного оформления запроса Вам необходимо перейти по данной ссылке:

http://moschip.ru/get-element

Вы можете разместить у нас заказ для любого Вашего проекта, будь то серийное производство или разработка единичного прибора.

В нашем ассортименте представлены ведущие мировые производители активных и пассивных электронных компонентов.

Нашей специализацией является поставка электронной компонентной базы двойного назначения, продукции таких производителей как XILINX, Intel (ex.ALTERA), Vicor, Microchip, Texas Instruments, Analog Devices, Mini-Circuits, Amphenol, Glenair.

Сотрудничество с глобальными дистрибьюторами электронных компонентов, предоставляет возможность заказывать и получать с международных складов практически любой перечень компонентов в оптимальные для Вас сроки.

На всех этапах разработки и производства наши партнеры могут получить квалифицированную поддержку опытных инженеров.

Система менеджмента качества компании отвечает требованиям в соответствии с ГОСТ Р ИСО 9001, ГОСТ РВ 0015-002 и ЭС РД 009

Офис по работе с юридическими лицами:

105318, г.Москва, ул.Щербаковская д.3, офис 1107, 1118, ДЦ «Щербаковский»

Телефон: +7 495 668-12-70 (многоканальный)

Факс: +7 495 668-12-70 (доб.304)

E-mail: info@moschip.ru

Skype отдела продаж:
moschip.ru
moschip.ru_4
moschip.ru_6
moschip.ru_9