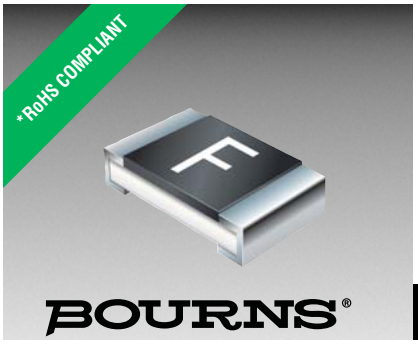

SingIFuse™ SF-0603F Series Features

- Single blow fuse for overcurrent protection
- 1608 (EIA 0603) miniature footprint
- Fast-acting fuse
- UL listed
- RoHS compliant* and halogen free**
- Thin film chip fuse
- Surface mount packaging for automated assembly

SF-0603F Series - Fast Acting Surface Mount Fuses

Electrical Characteristics

Model	Rated Current (Amps)	Fusing Time	Resistance (mΩ) Typ.***	Rated Voltage	Breaking Capacity	Typical I^2t (A^2s)
SF-0603F050	0.50	Open within 1 min. at 200 % rated current	250	DC 50 V	DC 50 V 50 A	0.005
SF-0603F063	0.63		173	DC 32 V	DC 32 V 50 A	0.007
SF-0603F080	0.80		115			0.014
SF-0603F100	1.00		88			0.016
SF-0603F125	1.25		63			0.027
SF-0603F150	1.50		45			0.037
SF-0603F160	1.60		42			0.041
SF-0603F200	2.00		33			0.044
SF-0603F250	2.50		24	DC 24 V	DC 24 V 50 A	0.055
SF-0603F300	3.00		21			0.082
SF-0603F315	3.15		19			0.089
SF-0603F400	4.00		15	DC 32 V	DC 32 V 50 A	0.239
SF-0603F500	5.00		12			0.433

***Resistance value was measured with less than 10 % of rated current.

Reliability Testing

Parameter	Requirement	Test Method
Carrying Capacity	No fusing	Rated current, 4 hours
Fusing Time	Within 1 minute	200 % of its rated current
Interrupting Ability	No mechanical damages	After the fuse is interrupted, rated voltage applied for 30 seconds again
Bending Test	No mechanical damages	Distance between holding points: 90 mm, Bending: 3 mm,1time, 30 seconds
Resistance to Solder Heat	±20 %	260 °C ±5 °C,10 seconds ±1 second
Solderability	95 % coverage minimum	235 °C ±5 °C, 2 ±0.5 second 245 °C ±5 °C, 2 ±0.5 second (lead free)
Temperature Rise	<75 °	100 % of its rated current, measure of surface temperature
Resistance to Dry Heat	±20 %	105 °C ±5 °C,1000 hours
Resistance to Solvent	No evident damage on protective	23 °C ±5 °C of isopropyl alcohol, 90 seconds coating and marking
Residual Resistance	10k W or more	Measure DC resistance after fusing
Thermal Shock	DR < 10 %	-20 °C / +25 °C /+125 °C /+25 °C, 10 cycles

Typical Part Marking

Represents total content. Layout may vary.

RATING CURRENT (A)

F = 0.50	S = 2.00
I = 0.63	T = 2.50
K = 0.80	3 = 3.00
L = 1.00	U = 3.15
M = 1.25	W = 4.00
P = 1.50	Y = 5.00
N = 1.60	

How to Order

SF - 0603 F 050 - 2

- SingIFuse™ Product Designator
- SMD Footprint: 1608 (EIA 0603) size
- Fuse Blow Type: F = Fast acting; S = Slow blow
- Rated Current: 050-500 (500 mA - 5.00 A)
- Packaging Type: - 2 = Tape & Reel (5,000 pcs./reel)

BOURNS®

Asia-Pacific:
Tel: +886-2 2562-4117
Fax: +886-2 2562-4116

Europe:
Tel: +41-41 768 5555
Fax: +41-41 768 5510

The Americas:
Tel: +1-951 781-5500
Fax: +1-951 781-5700

www.bourns.com

* RoHS Directive 2002/95/EC Jan 27 2003 including Annex.
** Bourns is using the definition that appears to be the prevalent definition used as the industry standard at this time. The Bourns definition of "halogen-free" is: Bromine (Br) content: ≤ 900 ppm; Chlorine (Cl) content: ≤ 900 ppm; Total Br + Cl content: ≤1500 ppm.

"SingIFuse" is a trademark of Bourns, Inc.
Specifications are subject to change without notice.
The device characteristics and parameters in this data sheet can and do vary in different applications and actual device performance may vary over time.
Users should verify actual device performance in their specific applications.

SingIFuse™ SF-0603F Series Applications

- Portable memory
- LCD monitors
- Disk drives
- PDAs
- Digital cameras
- DVDs
- Cell phones
- Rechargeable battery packs
- Battery chargers
- Set top boxes
- Industrial controllers

SF-0603F Series - Fast Acting Surface Mount Fuses

BOURNS®

Solder Reflow Recommendations

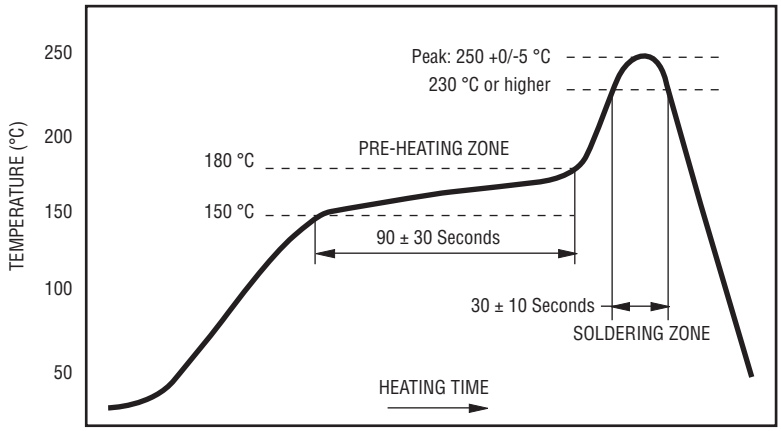

PEAK: 250 +0/-5 °C, 5 seconds
PRE-HEATING ZONE: 150 to 180 °C, 90 ± 30 seconds
SOLDERING ZONE: 230 °C or higher, 30 ± 10 seconds

Product Dimensions

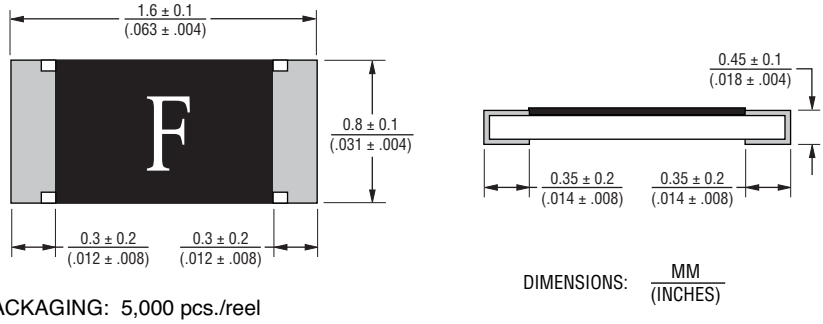

PACKAGING: 5,000 pcs./reel

Recommended Pad Layout

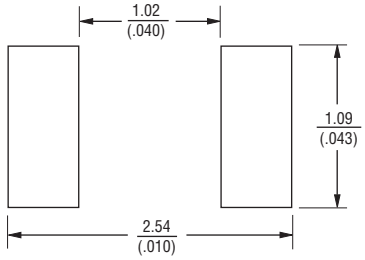

Thermal Derating Curve

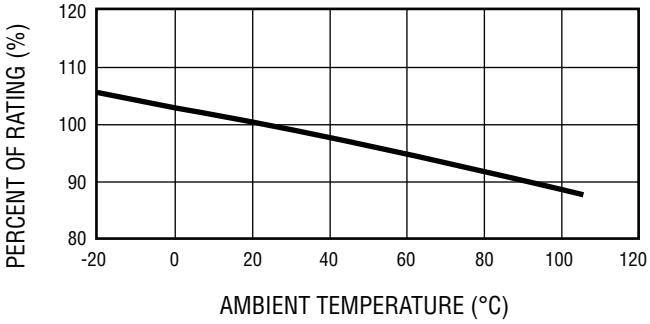

Construction & Material Content

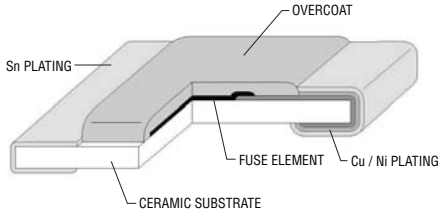

Operating Temperature.....-40 °C to +105 °C
Storage Conditions
Temperature .....+5 °C to +35 °C
Humidity.....40 % to 75 %
Shelf Life..... 2 years from manufacturing date

Specifications are subject to change without notice.
The device characteristics and parameters in this data sheet can and do vary in different applications and actual device performance may vary over time.
Users should verify actual device performance in their specific applications.

Average Time Current Curves

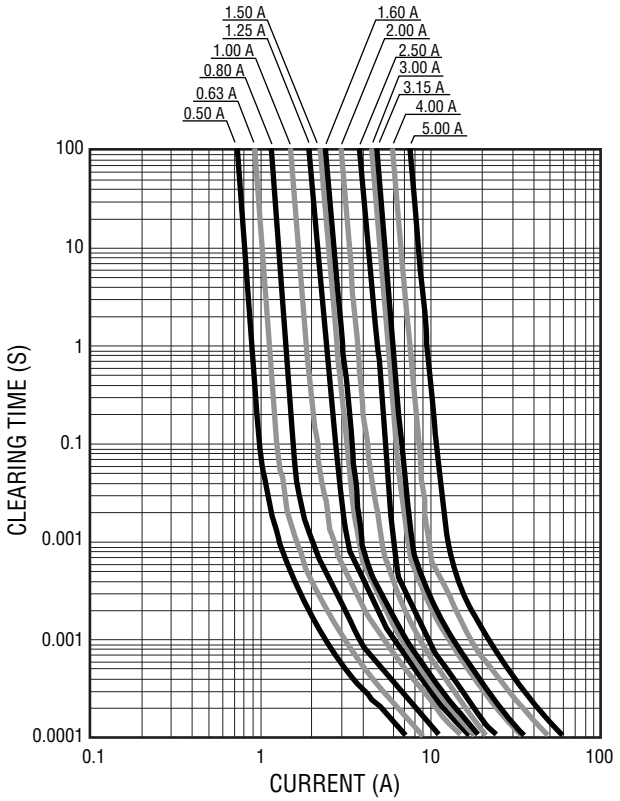

Minimum I²T V Clear Time Curves

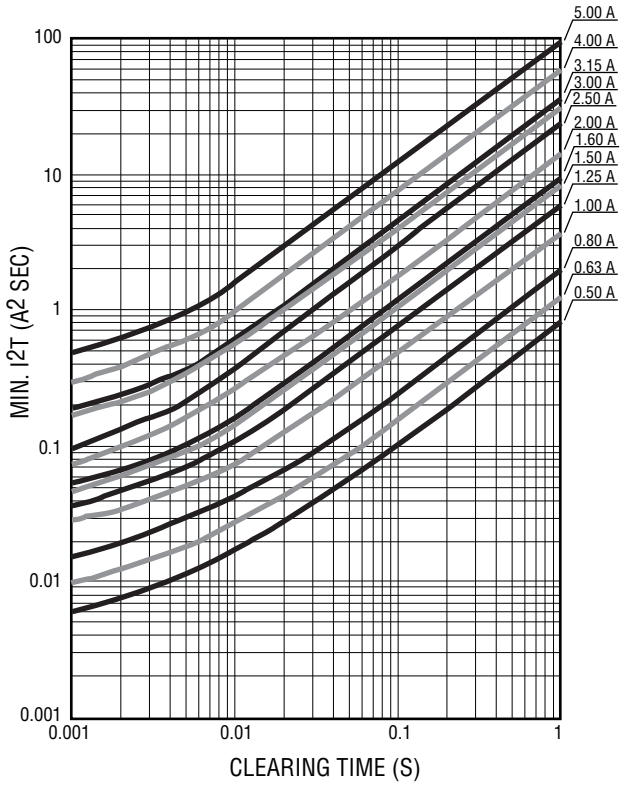

Specifications are subject to change without notice.
The device characteristics and parameters in this data sheet can and do vary in different applications and actual device performance may vary over time.
Users should verify actual device performance in their specific applications.

SF-0603F Series Tape and Reel Specifications

BOURNS®

Tape Dimensions	SF-0603F Series per EIA 481-2
W	8.0 ± 0.2 (.315 ± .008)
P_0	4.0 ± 0.1 (.157 ± .004)
P_1	4.0 ± 0.1 (.157 ± .004)
P_2	2.0 ± 0.05 (.079 ± .002)
A	1.1 ± 0.1 (.043 ± .004)
B	1.9 ± 0.1 (.075 ± .004)
F	3.5 ± 0.05 (.138 ± .002)
E	1.75 ± 0.1 (.069 ± .004)
D_0	1.5 + 0.1/-0 (.059 + .004/-0)
T	0.64 ± 0.1 (.025 ± .004)
Reel Dimensions	
A	180 +0/-3.0 (7.087 +0/-.118)
B Min.	60.0 (2.362)
C	13.0 ± 1.0 (.512 ± .039)
W	9.0 ± 1.0 (.354 ± .039)
T	11.4 ± 2.0 (.449 ± .079)

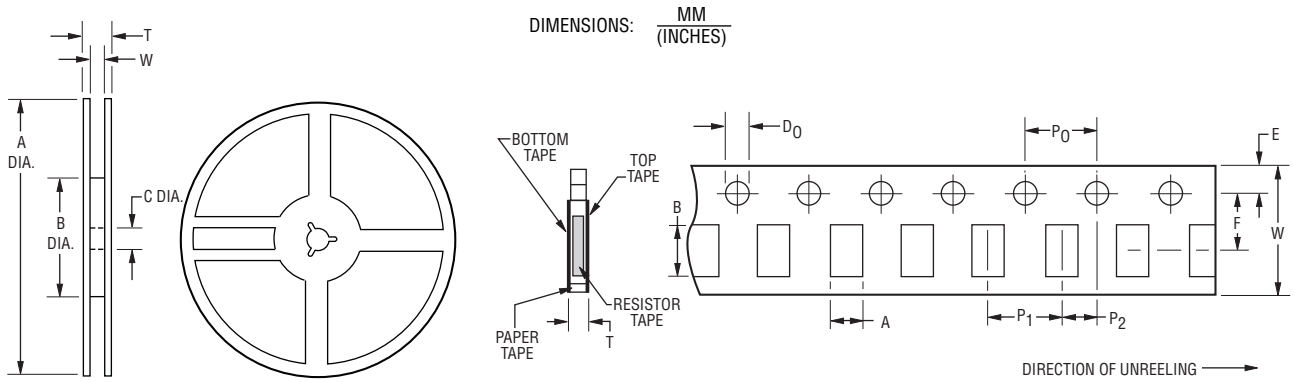

Specifications are subject to change without notice.
The device characteristics and parameters in this data sheet can and do vary in different applications and actual device performance may vary over time.
Users should verify actual device performance in their specific applications.

Общество с ограниченной ответственностью «МосЧип» ИНН 7719860671 / КПП 771901001
Адрес: 105318, г.Москва, ул.Щербаковская д.3, офис 1107

Данный компонент на территории Российской Федерации

Вы можете приобрести в компании MosChip.

Для оперативного оформления запроса Вам необходимо перейти по данной ссылке:

http://moschip.ru/get-element

Вы можете разместить у нас заказ для любого Вашего проекта, будь то серийное производство или разработка единичного прибора.

В нашем ассортименте представлены ведущие мировые производители активных и пассивных электронных компонентов.

Нашей специализацией является поставка электронной компонентной базы двойного назначения, продукции таких производителей как XILINX, Intel (ex.ALTERA), Vicor, Microchip, Texas Instruments, Analog Devices, Mini-Circuits, Amphenol, Glenair.

Сотрудничество с глобальными дистрибьюторами электронных компонентов, предоставляет возможность заказывать и получать с международных складов практически любой перечень компонентов в оптимальные для Вас сроки.

На всех этапах разработки и производства наши партнеры могут получить квалифицированную поддержку опытных инженеров.

Система менеджмента качества компании отвечает требованиям в соответствии с ГОСТ Р ИСО 9001, ГОСТ РВ 0015-002 и ЭС РД 009

Офис по работе с юридическими лицами:

105318, г.Москва, ул.Щербаковская д.3, офис 1107, 1118, ДЦ «Щербаковский»

Телефон: +7 495 668-12-70 (многоканальный)

Факс: +7 495 668-12-70 (доб.304)

E-mail: info@moschip.ru

Skype отдела продаж:
moschip.ru
moschip.ru_4
moschip.ru_6
moschip.ru_9