Medium Voltage Fuses

2,400 - 38,000 VAC • Current-Limiting

Littelfuse now offers a complete selection of "E" and "R" rated medium voltage fuses for the protection of transformers, potential transformers, feeders, and motor circuits. Single, double, and triple barrel designs are available to cover a wide range of current, voltage, and interrupting ratings. Conventional ferrule type, clip lock, and bolt-in mounting configurations are now available for virtually any application. Hermetically sealed fuses for use in hazardous environments are also offered.

Contact the factory or your local Littelfuse representative for additional fuse ratings or custom mounting configurations.

24 Hour Emergency Service is available. Call 847 824 1188.

Applications

Power Transformer Protection
Potential Transformer Protection
Motor Controller Back-up Protection
Fused Switches
Feeder Circuits

Current-limiting "E" and "R" rated fuses are equipped with a mechanical indicator or striker pin that protrudes through the fuse cap upon operation of the fuse. This provides visual identification of a blown fuse and can be used as a trigger for external devices.

Note: Extension distance ½" min; extension force 2lb. min

General Information

The terms "Medium Voltage" and "High Voltage" have been used interchangeably by many people to describe fuses operating above 600 volts. Technically speaking, "medium voltage" fuses are those intended for the voltage range from 2,400 to 38,000 VAC. "High voltage" fuses are for circuits carrying voltages greater than 38,000 VAC.

"E" rated fuses are considered to be general purpose fuses and can be used to protect against low and high values of fault current. "R" rated fuses are designed for back-up protection. They must be used in series with other devices such as motor overload relays in order to achieve both overload and short-circuit protection.

Medium voltage fuses are not intended to provide overload protection in the same sense as fuses rated 600 volts or less. Medium voltage fuse current ratings do not have the same meanings as the ampere ratings of low voltage fuses.

All medium voltage fuses are limited in their ability to interrupt low value overcurrents, especially those between 100% and 200% of the fuse's continuous current rating. They are designed to carry their rated current without exceeding the temperature rise permitted by NEMA and ANSI standards.

Additional application data can be found in the Fuse Application section of this catalog.

Bolt-in Mount Fuses

© 2005 Littelfuse • POWR-GARD™ Products Catalog

R Rated Medium Voltage Fuses

Current-Limiting

Features

"R" rated fuses provide required short-circuit protection for medium voltage motors, motor controllers and associated circuitry. These components have limited ability to absorb the energy of large short-circuit currents. Medium voltage motor controllers contain overload relays which provide both overload protection and locked rotor protection to the motor. The controllers are also intended to interrupt low value short-circuits within the capability of the motor controller. This protects the medium voltage fuse from sustained overcurrents which are less than their minimum interrupting rating.

NEMA Standards for "R" rated medium voltage power fuses require they operate within 15-35 seconds when subjected to an rms current 100 times the "R" rating. For example, a fuse with a 2R rating will open within 15 to 35 seconds on an applied current of 2 x 100 = 200 amperes.

Part Number System

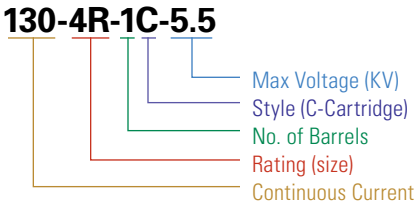

Characteristics

Voltage Rating: 2,400 volts – 8,250 volts
Current Range: 2R – 36R

Options

- Hermitically sealed for use in hazardous locations (add "S" suffix to part number)
- Bolt-in mounting configurations

Hookeye Feature*

*For hookeye attachment; add "W" suffix to part number

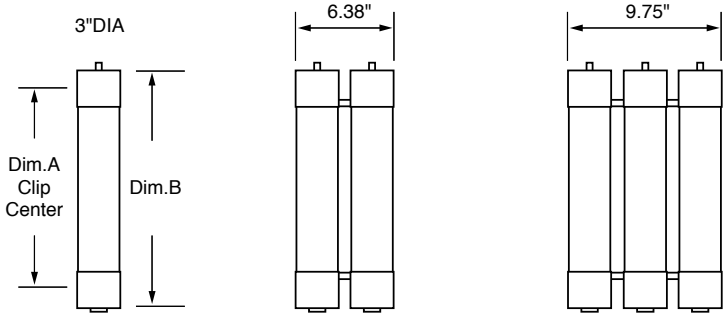

D — **Figure 1**
DD — **Figure 2**
DDD — **Figure 3**

R Rated	Catalog Number	Old Catalog Number	Size	Maximum Continuous Current @ 40 deg C.	Dim. A (inches)	Dim. B (inches)	Min. Interrupting Rating RMS Amps	Max Interrupting Rating RMS Asym	Figure Number
2.75 KV	70-2R-1C-2.75	LCK 2R	2R	70	7"	10.875"	170	80,000	1
	100-3R-1C-2.75	LCK 3R	3R	100	7"	10.875"	250	80,000	1
	130-4R-1C-2.75	LCK 4R	4R	130	7"	10.875"	340	80,000	1
	150-5R-1C-2.75	LCK 5R	5R	150	7"	10.875"	390	80,000	1
	170-6R-1C-2.75	LCK 6R	6R	170	7"	10.875"	500	80,000	1
	200-9R-1C-2.75	LCK 9R	9R	200	7"	10.875"	760	80,000	1
	230-12R-1C-2.75	LCK 12R	12R	230	7"	10.875"	1000	80,000	1
	390-18R-2C-2.75	LCK 18R	18R	390	7"	10.875"	1500	80,000	2
	450-24R-2C-2.75	LCK 24R	24R	450	7"	10.875"	1950	80,000	2

Add "w" suffix to part number for hookeye attachment.

R Rated Medium Voltage Fuses

Current-Limiting

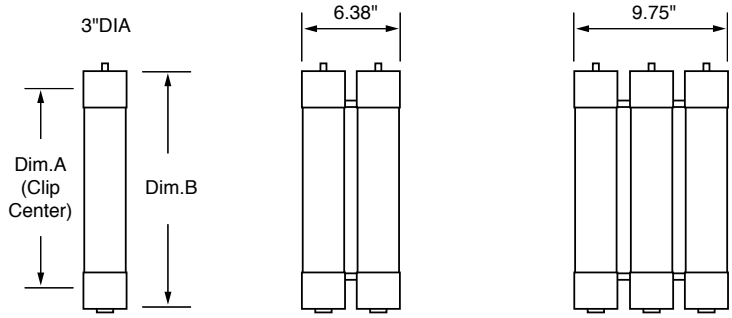

Figure 4 Figure 5 Figure 6

R Rated	Catalog Number	Old Catalog Number	Size	Maximum Continuous Current @ 40 Degrees C°	Dim. A (inches)	Dim. B (inches)	Min. Interrupting Rating RMS Amps	Max Interrupting Rating RMS (Asym)	Figure Number
5.5 KV	70-2R-1C-5.5	LCL 2R	2R	70	12"	15.875"	170	80,000	4
	100-3R-1C-5.5	LCL 3R	3R	100	12"	15.875"	250	80,000	4
	130-4R-1C-5.5	LCL 4R	4R	130	12"	15.875"	340	80,000	4
	150-5R-1C-5.5	LCL 5R	5R	150	12"	15.875"	390	80,000	4
	170-6R-1C-5.5	LCL 6R	6R	170	12"	15.875"	500	80,000	4
	200-9R-1C-5.5	LCL 9R	9R	200	12"	15.875"	760	80,000	4
	230-12R-1C-5.5	LCL 12R	12R	230	12"	15.875"	1000	80,000	4
	390-18R-2C-5.5	LCL 18R	18R	390	12"	15.875"	1500	80,000	5
	450-24R-2C-5.5	LCL 24R	24R	450	12"	15.875"	1950	80,000	5
	480-26R-2C-5.5	—	26R	480	12"	15.875"	2100	80,000	5
	550-30R-2C-5.5	—	30R	550	12"	15.875"	2400	80,000	5
	600-32R-2C-5.5	—	32R	600	12"	15.875"	2600	80,000	5
	650-36R-2C-5.5	—	36R	650	12"	15.875"	2900	80,000	5
	550-30R-3C-5.5	—	30R	550	12"	15.875"	2400	80,000	6
	600-32R-3C-5.5	—	32R	600	12"	15.875"	2600	80,000	6
	650-36R-3C-5.5	LCL 36R	36R	650	12"	15.875"	2900	80,000	6

5.5 KV 14"Clip Centers	70-2R-1C-5.5X	—	2R	70	14"	17.875"	170	80,000	4
	100-3R-1C-5.5X	—	3R	100	14"	17.875"	250	80,000	4
	130-4R-1C-5.5X	—	4R	130	14"	17.875"	340	80,000	4
	150-5R-1C-5.5X	—	5R	150	14"	17.875"	390	80,000	4
	170-6R-1C-5.5X	—	6R	170	14"	17.875"	500	80,000	4
	200-9R-1C-5.5X	—	9R	200	14"	17.875"	760	80,000	4
	230-12R-1C-5.5X	—	12R	230	14"	17.875"	1000	80,000	4
	390-18R-2C-5.5X	—	18R	390	14"	17.875"	1500	80,000	5
	450-24R-2C-5.5X	—	24R	450	14"	17.875"	1950	80,000	5
	550-30R-2C-5.5X	—	30R	550	14"	17.875"	2400	80,000	5

R Rated	Catalog Number	Old Catalog Number	Size	Maximum Continuous Current @ 40 Degrees C°	Dim. A (inches)	Dim. B (inches)	Min. Interrupting Rating RMS Amps	Max Interrupting Rating RMS (Asym)	Figure Number
8.25 KV	70-2R-1C-8.25	—	2R	70	12"	15.875"	190	80,000	4
	100-3R-1C-8.25	—	3R	100	12"	15.875"	225	80,000	4
	130-4R-1C-8.25	—	4R	130	12"	15.875"	330	80,000	4
	150-5R-1C-8.25	—	5R	150	12"	15.875"	440	80,000	4
	170-6R-1C-8.25	—	6R	170	12"	15.875"	500	80,000	4
	200-9R-1C-8.25	—	9R	200	12"	15.875"	740	80,000	4
	230-12R-1C-8.25	—	12R	230	12"	15.875"	955	80,000	4
	390-18R-2C-8.25	—	18R	390	12"	15.875"	1440	80,000	5
	450-24R-2C-8.25	—	24R	450	12"	15.875"	1910	80,000	5

Add "w" suffix to part number for hookeye attachment.

© 2005 Littelfuse • POWR-GARD™ Products Catalog

R Rated Medium Voltage Fuses

Current-Limiting

Littelfuse POWR-GARD™ medium voltage fuses are available in several bolt-in mounting configurations. Contact factory for custom configurations.

"B" Bolt mount
"BI" Bolt-In mount
"IB" Inverted-Bolt mount

Refer to illustrations for mounting dimensions.

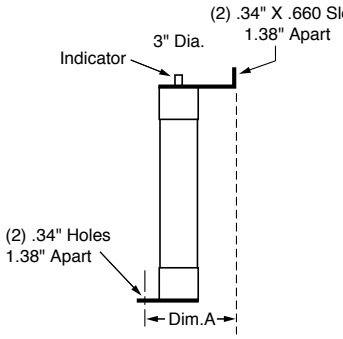

Figure 7

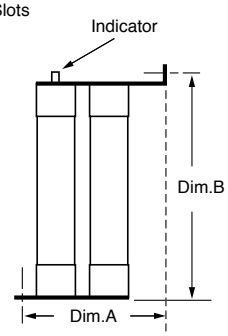

Figure 8

Bolt Mount "B"

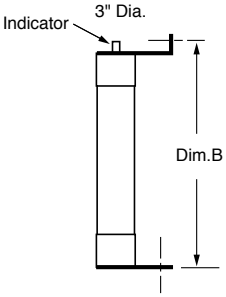

Figure 9

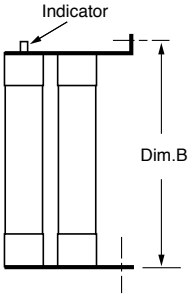

Figure 10

Inverted-Bolt "IB"

R Rated	Catalog Number	Old Catalog Number	Size	Maximum Continuous Current @ Degrees C°	Dim. A (inches)	Dim. B (inches)	Min. Interrupting Rating RMS Amps	Max Interrupting Rating RMS (Asym)	Figure Number
2.75 KV Bolt Mount "B"	70-2R-1B-2.75	—	2R	70	4.6"	13"	170	80,000	7
	00-3R-1B-2.75	—	3R	100	4.6"	13"	250	80,000	7
	30-4R-1B-2.75	—	4R	130	4.6"	13"	240	80,000	7
	150-5R-1B-2.75	—	5R	150	4.6"	13"	390	80,000	7
	170-6R-1B-2.75	—	6R	170	4.6"	13"	500	80,000	7
	200-9R-1B-2.75	—	9R	200	4.6"	13"	760	80,000	7
	230-12R-1B-2.75	—	12R	230	4.6"	13"	1000	80,000	7
	390-18R-2B-2.75	—	18R	390	7.4"	13"	1500	80,000	8
	450-24R-2B-2.75	—	24R	450	7.4"	13"	1950	80,000	8
2.75 KV Inverted Bolt "IB"	70-2R-1IB-2.75	—	2R	70	—	13"	170	80,000	9
	100-3R-1IB-2.75	—	3R	100	—	13"	250	80,000	9
	130-4R-1IB-2.75	—	4R	130	—	13"	340	80,000	9
	150-5R-1IB-2.75	—	5R	150	—	13"	390	80,000	9
	170-6R-1IB-2.75	—	6R	170	—	13"	500	80,000	9
	200-9R-1IB-2.75	—	9R	200	—	13"	760	80,000	9
	230-12R-1IB-2.75	—	12R	230	—	13"	1000	80,000	9
	390-18R-2IB-2.75	—	18R	390	—	13"	1500	80,000	10
	450-24R-2IB-2.75	—	24R	450	—	13"	1950	80,000	10

R Rated Medium Voltage Fuses

Current-Limiting

Bolt-In Mount "BI"

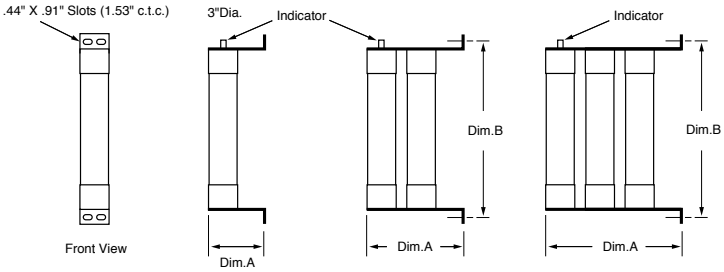

Figure 11 Figure 12 Figure 13

R Rated	Catalog Number	Old Catalog Number	Size	Maximum Continuous Current @ 40° C.	Dim. A (inches)	Dim. B (inches)	Min. Interrupting Rating RMS Amps	Max Interrupting Rating RMS (Asym)	Figure Number
5.5 KV Bolt In Mount "BI"	70-2R-1BI-5.5	—	2R	70	3.6"	18"	170	80,000	11
	100-3R-1BI-5.5	—	3R	100	3.6"	18"	250	80,000	11
	130-4R-1BI-5.5	—	4R	130	3.6"	18"	340	80,000	11
	150-5R-1BI-5.5	—	5R	150	3.6"	18"	390	80,000	11
	170-6R-1BI-5.5	—	6R	170	3.6"	18"	500	80,000	11
	200-9R-1BI-5.5	—	9R	200	3.6"	18"	760	80,000	11
	230-12R-1BI-5.5	—	12R	230	3.6"	18"	1000	80,000	11
	390-18R-2BI-5.5	—	18R	390	7.6"	18"	1500	80,000	12
	450-24R-2BI-5.5	—	24R	450	7.6"	18"	1950	80,000	12
	480-26R-2BI-5.5	—	26R	480	7.6"	18"	2200	80,000	12
	550-30R-2BI-5.5	—	30R	550	7.6"	18"	2400	80,000	12
	600-32R-2BI-5.5	—	32R	600	7.6"	18"	2650	80,000	12
	650-36R-2BI-5.5	—	36R	650	7.6"	18"	2900	80,000	12
	550-30R-3BI-5.5	—	30R	550	—	18"	—	80,000	13
	600-32R-3BI-5.5	—	32R	600	—	18"	—	80,000	13
	650-36R-3BI-5.5	—	36R	650	—	18"	—	80,000	13
	700-38R-3BI-5.5	—	38R	700	—	18"	—	80,000	13
5.5 KV Bolt Mount "B"	70-2R-1B-5.5	—	2R	70	4.6"	18"	170	80,000	7
	100-3R-1B-5.5	—	3R	100	4.6"	18"	250	80,000	7
	130-4R-1B-5.5	—	4R	130	4.6"	18"	340	80,000	7
	150-5R-1B-5.5	—	5R	150	4.6"	18"	390	80,000	7
	170-6R-1B-5.5	—	6R	170	4.6"	18"	500	80,000	7
	200-9R-1B-5.5	—	9R	200	4.6"	18"	760	80,000	7
	230-12R-1B-5.5	—	12R	230	4.6"	18"	1000	80,000	7
	390-18R-2B-5.5	—	18R	390	7.4"	18"	1500	80,000	8
	450-24R-2B-5.5	—	24R	450	7.4"	18"	1950	80,000	8
	550-30R-2B-5.5	—	30R	550	8.4"	18"	2400	80,000	8
	600-32R-2B-5.5	—	32R	600	8.4"	18"	2650	80,000	8
	650-36R-2B-5.5	—	36R	650	8.4"	18"	2900	80,000	8
5.5 KV Inverted Bolt "IB"	70-2R-1IB-5.5	—	2R	70	—	18"	170	80,000	9
	100-3R-1IB-5.5	—	3R	100	—	18"	250	80,000	9
	130-4R-1IB-5.5	—	4R	130	—	18"	340	80,000	9
	150-5R-1IB-5.5	—	5R	150	—	18"	390	80,000	9
	170-6R-1IB-5.5	—	6R	170	—	18"	500	80,000	9
	200-9R-1IB-5.5	—	9R	200	—	18"	760	80,000	9
	230-12R-1IB-5.5	—	12R	230	—	18"	1000	80,000	9
	390-18R-2IB-5.5	—	18R	390	—	18"	1500	80,000	10
	450-24R-2IB-5.5	—	24R	450	—	18"	1950	80,000	10
	550-30R-2IB-5.5	—	30R	550	—	18"	2400	80,000	10
	600-32R-2IB-5.5	—	32R	600	—	18"	2650	80,000	10
	650-36R-2IB-5.5	—	36R	650	—	18"	2900	80,000	10
8.25 KV Bolt-In Mount "BI"	70-2R-1BI-8.25	—	2R	70	3.6"	18"	190	80,000	11
	100-3R-1BI-8.25	—	3R	100	3.6"	18"	225	80,000	11
	130-4R-1BI-8.25	—	4R	130	3.6"	18"	330	80,000	11
	150-5R-1BI-8.25	—	5R	150	3.6"	18"	400	80,000	11
	170-6R-1BI-8.25	—	6R	170	3.6"	18"	500	80,000	11
	200-9R-1BI-8.25	—	9R	200	3.6"	18"	740	80,000	11
	230-12R-1BI-8.25	—	12R	230	3.6"	18"	955	80,000	11
	390-18R-2BI-8.25	—	18R	390	7.6"	18"	1440	80,000	12
	450-24R-2BI-8.25	—	24R	450	7.6"	18"	1910	80,000	12

© 2005 Littelfuse • POWR-GARD™ Products Catalog

Live Parts

Live parts are available for mounting "E", "R", and "PT" single, double, and triple barrel fuses. Mounting clips are available for ferrule type and clip lock style fuses. All clips are sold in pairs. Contact factory for additional live parts.

Part Number: 700-156*

System Number: 0700156.Z

For use with 1-9/16" to 1-5/8" (1.625") diameter PT fuses.

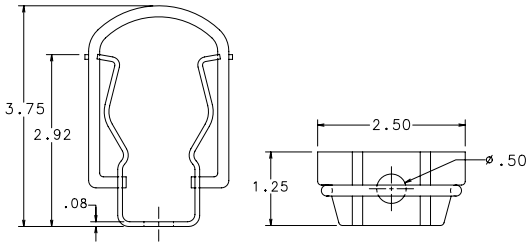

Part Number: 700-300*

System Number: 0700300.Z

For use with 3" diameter fuses.

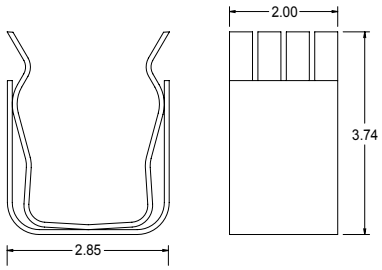

Part Number: 700-500*

System Number: 0700500.Z

For use with all 13/16" (.8125") diameter PT fuses.

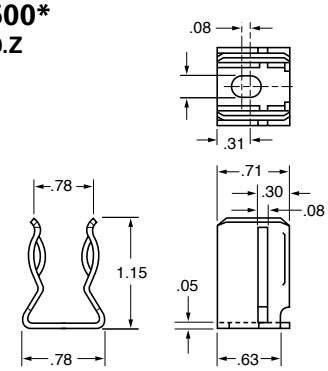

Part Number: 700-530*

System Number: 0700530.Z

For use with all 3" diameter fuses.

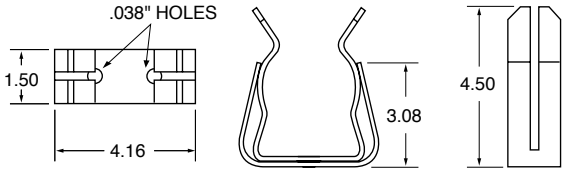

Part Number: 700-520-CL*

System Number: 0700520.ZXCL

Clip Lock Design (For CL-14)

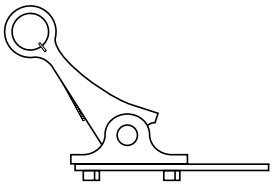

* One Pair. Dimensions for reference only.

Mounting Details for Clip Lock

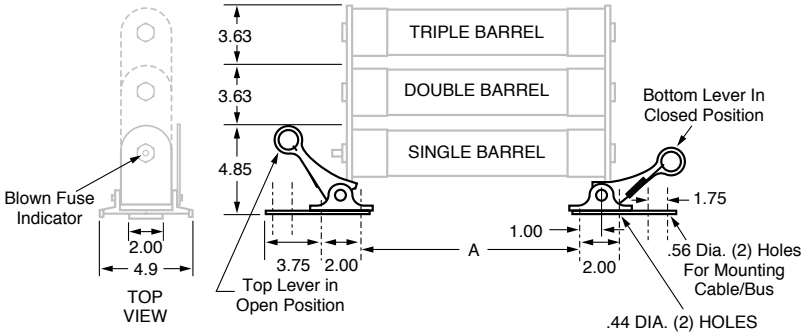

Общество с ограниченной ответственностью «МосЧип» ИНН 7719860671 / КПП 771901001
Адрес: 105318, г.Москва, ул.Щербаковская д.3, офис 1107

Данный компонент на территории Российской Федерации

Вы можете приобрести в компании MosChip.

Для оперативного оформления запроса Вам необходимо перейти по данной ссылке:

http://moschip.ru/get-element

Вы можете разместить у нас заказ для любого Вашего проекта, будь то серийное производство или разработка единичного прибора.

В нашем ассортименте представлены ведущие мировые производители активных и пассивных электронных компонентов.

Нашей специализацией является поставка электронной компонентной базы двойного назначения, продукции таких производителей как XILINX, Intel (ex.ALTERA), Vicor, Microchip, Texas Instruments, Analog Devices, Mini-Circuits, Amphenol, Glenair.

Сотрудничество с глобальными дистрибьюторами электронных компонентов, предоставляет возможность заказывать и получать с международных складов практически любой перечень компонентов в оптимальные для Вас сроки.

На всех этапах разработки и производства наши партнеры могут получить квалифицированную поддержку опытных инженеров.

Система менеджмента качества компании отвечает требованиям в соответствии с ГОСТ Р ИСО 9001, ГОСТ РВ 0015-002 и ЭС РД 009

Офис по работе с юридическими лицами:

105318, г.Москва, ул.Щербаковская д.3, офис 1107, 1118, ДЦ «Щербаковский»

Телефон: +7 495 668-12-70 (многоканальный)

Факс: +7 495 668-12-70 (доб.304)

E-mail: info@moschip.ru

Skype отдела продаж:
moschip.ru
moschip.ru_4
moschip.ru_6
moschip.ru_9