STD3NK80Z-1, STD3NK80ZT4, STF3NK80Z, STP3NK80Z

N-channel 800 V, 3.8 Ω typ., 2.5 A SuperMESH™ Power MOSFETs in IPAK, DPAK, TO-220FP, TO-220 packages

Datasheet - production data

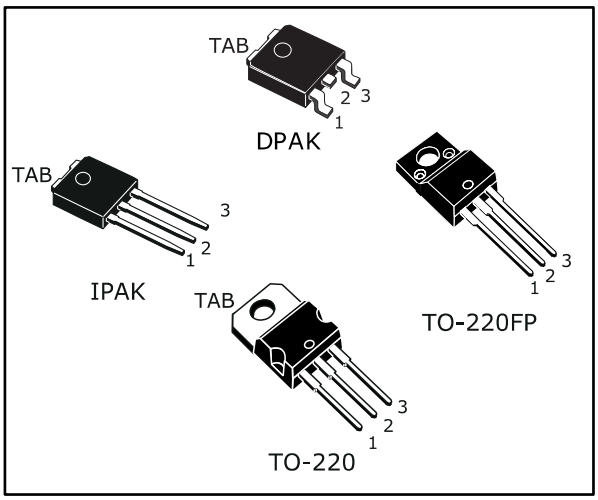

Figure 1: Internal schematic diagram

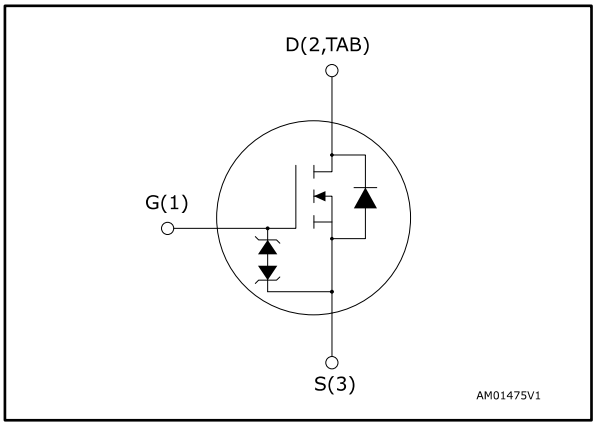

Features

Order code	V_{DS}	$R_{DS(on)}$ max.	I_D
STD3NK80Z-1	800 V	4.5 Ω	2.5 A
STD3NK80ZT4	800 V	4.5 Ω	2.5 A
STF3NK80Z	800 V	4.5 Ω	2.5 A
STP3NK80Z	800 V	4.5 Ω	2.5 A

- Extremely high dv/dt capability
- 100% avalanche tested
- Gate charge minimized
- Zener-protected

Applications

- Switching applications

Description

These high voltage devices are Zener-protected N-channel Power MOSFETs developed using the SuperMESH™ technology by STMicroelectronics, an optimization of the well-established PowerMESH™. In addition to a significant reduction in on-resistance, these devices are designed to ensure a high level of dv/dt capability for the most demanding applications. Such series complements ST's full range of high voltage MOSFETs including the revolutionary MDmesh™ products.

Table 1: Device summary

Order code	Marking	Package	Packaging
STD3NK80Z-1	D3NK80Z	IPAK	Tube
STD3NK80ZT4	D3NK80Z	DPAK	Tape and reel
STF3NK80Z	F3NK80Z	TO-220FP	Tube
STP3NK80Z	P3NK80Z	TO-220	Tube

This is information on a product in full production. www.st.com

Contents

1 Electrical ratings 3

2 Electrical characteristics 4

2.1 Electrical characteristics (curves) 6

3 Test circuits 9

4 Package information 10

4.1 IPAK (TO-251) type A package information 10

4.2 DPAK package information 12

4.2.1 DPAK (TO-252) type A package information 12

4.2.2 DPAK (TO-252) type C2 package information 15

4.2.3 DPAK (TO-252) type E package information 18

4.2.4 DPAK (TO-252) packing information 20

4.3 TO-220FP package information 22

4.4 TO-220 package information 24

4.4.1 TO-220 type A package information 24

4.4.2 TO-220 type H package information 26

5 Revision history 28

1 Electrical ratings

Table 2: Absolute maximum ratings

Symbol	Parameter	Value		Unit
		TO-220, DPAK, IPAK	TO-220FP	
V_{DS}	Drain-source voltage	800		V
V_{GS}	Gate-source voltage	±30		V
I_D	Drain current (continuous) at T_C = 25 °C	2.5	2.5(1)	A
	Drain current (continuous) at T_C = 100 °C	1.57	1.57(1)	A
I_{DM}(2)	Drain current (pulsed)	10	10(1)	A
P_{TOT}	Total dissipation at T_C = 25 °C	70	25	W
ESD	Gate-source, human body model, R = 1.5 kΩ, C = 100 pF	2		kV
dv/dt(3)	Peak diode recovery voltage slope	4.5		V/ns
V_{ISO}	Insulation withstand voltage (RMS) from all three leads to external heat sink (t = 1 s, T_C = 25 °C)		2.5	kV
T_{stg}	Storage temperature range	-55 to 150		°C
T_j	Operation junction temperature range			

Notes:

(1)This value is limited by package.

(2)Pulse width is limited by safe operating area.

(3)I_{SD} ≤ 2.5 A, di/dt ≤ 200 A/µs, $V_{DS(peak)} < V_{(BR)DSS}$, V_{DD} = 640 V

Table 3: Thermal data

Symbol	Parameter	Value				Unit
		TO-220	TO-220FP	DPAK	IPAK	
$R_{thj-case}$	Thermal resistance junction-case	1.78	5	1.78		°C/W
$R_{thj-amb}$	Thermal resistance junction-ambient	62.5			100	°C/W
$R_{thj-pcb}$(1)	Thermal resistance junction-pcb			50		°C/W

Notes:

(1)When mounted on FR-4 board of 1 inch², 2 oz Cu.

Table 4: Avalanche characteristics

Symbol	Parameter	Value	Unit
I_{AR}	Avalanche current, repetitive or non-repetitive (pulse width limited by $T_{J\,max}$)	2.5	A
E_{AS}	Single pulse avalanche energy (starting T_J =25 °C, I_D = I_{AR}, V_{DD}= 50 V)	170	mJ

2 Electrical characteristics

(T_C = 25 °C unless otherwise specified)

Table 5: On /off states

Symbol	Parameter	Test conditions	Min.	Typ.	Max.	Unit
$V_{(BR)DSS}$	Drain-source breakdown voltage	V_{GS} = 0 V, I_D = 1 mA	800			V
I_{DSS}	Zero gate voltage drain current	V_{GS} = 0 V, V_{DS} = 800 V			1	µA
		V_{GS} = 0 V, V_{DS} = 800 V, T_C = 125 °C(1)			50	µA
I_{GSS}	Gate-body leakage current	V_{DS} = 0 V, V_{GS} = ±20 V			±10	µA
$V_{GS(th)}$	Gate threshold voltage	V_{DS} = V_{GS}, I_D = 50 µA	3	3.75	4.5	V
$R_{DS(on)}$	Static drain-source on- resistance	V_{GS} = 10 V, I_D = 1.25 A		3.8	4.5	Ω

Notes:

(1)Defined by design, not subject to production test.

Table 6: Dynamic

Symbol	Parameter	Test conditions	Min.	Typ.	Max.	Unit
C_{iss}	Input capacitance	V_{GS} = 0 V, V_{DS} = 25 V, f = 1 MHz	-	485	-	pF
C_{oss}	Output capacitance		-	57	-	pF
C_{rss}	Reverse transfer capacitance		-	11	-	pF
$C_{oss\ eq}$(1)	Equivalent output capacitance	V_{GS} = 0 V, V_{DS} = 0 to 640 V	-	22	-	pF
Q_g	Total gate charge	V_{DD} = 640 V, I_D = 2.5 A, V_{GS} = 0 to 10 V (see *Figure 17: "Test circuit for gate charge behavior"*)	-	19	-	nC
Q_{gs}	Gate-source charge		-	3.2	-	nC
Q_{gd}	Gate-drain charge		-	10.8	-	nC

Notes:

(1)$C_{oss\ eq}$ is defined as a constant equivalent capacitance giving the same charging time as C_{oss} when V_{DS} increases from 0 to 80%

Table 7: Switching times

Symbol	Parameter	Test conditions	Min.	Typ.	Max.	Unit
$t_{d(on)}$	Turn-on delay time	V_{DD} = 400 V, I_D = 1.25 A, R_G = 4.7 Ω, V_{GS} =10 V (see *Figure 16: "Test circuit for resistive load switching times"* and *Figure 21: "Switching time waveform"*)	-	17	-	ns
t_r	Rise time		-	27	-	ns
$t_{d(off)}$	Turn-off delay time		-	36	-	ns
t_f	Fall time		-	40	-	ns

Table 8: Source drain diode

Symbol	Parameter	Test conditions	Min.	Typ.	Max.	Unit
I_{SD}	Source-drain current		-		2.5	A
I_{SDM}(1)	Source-drain current (pulsed)		-		10	A
V_{SD}(2)	Forward on voltage	I_{SD} = 2.5 A, V_{GS} = 0 V	-		1.6	V
t_{rr}	Reverse recovery time	I_{SD} = 2.5 A, di/dt = 100 A/µs V_{DD} = 50 V (see *Figure 18: "Test circuit for inductive load switching and diode recovery times"*)	-	384		ns
Q_{rr}	Reverse recovery charge		-	1.6		µC
I_{RRM}	Reverse recovery current		-	8.4		A
t_{rr}	Reverse recovery time	I_{SD} = 2.5 A, di/dt = 100 A/µs, V_{DD} = 50 V , T_J = 150 °C (see *Figure 18: "Test circuit for inductive load switching and diode recovery times"*)	-	474		ns
Q_{rr}	Reverse recovery charge		-	2.1		µC
I_{RRM}	Reverse recovery current		-	8.8		A

Notes:

(1)Pulsed: pulse duration = 300 µs, duty cycle 1.5%.

(2)Pulse width is limited by safe operating area.

Table 9: Gate-source Zener diode

Symbol	Parameter	Test conditions	Min.	Typ.	Max.	Unit
$V_{(BR)GSO}$	Gate-source breakdown voltage	I_{GS} = ±1 mA (open drain)	30	-	-	V

The built-in back-to-back Zener diodes are specifically designed to enhance the ESD performance of the device. The Zener voltage facilitates efficient and cost-effective device integrity protection, thus eliminating the need for additional external componentry.

2.1 Electrical characteristics (curves)

Figure 2: Safe operating area for TO-220, DPAK, IPAK

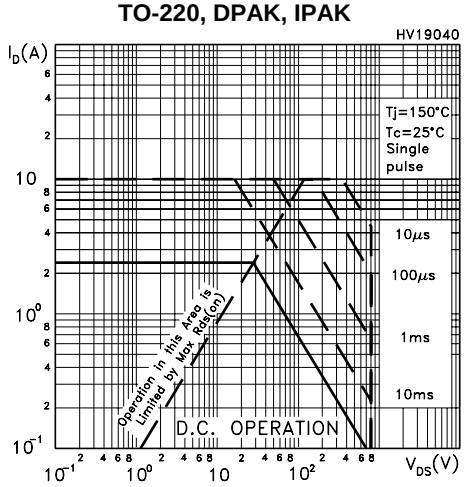

Figure 3: Thermal impedance for TO-220, DPAK, IPAK

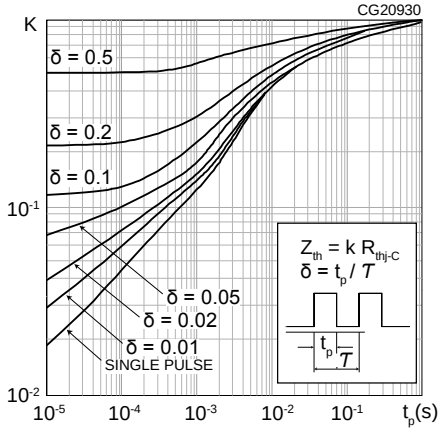

Figure 4: Safe operating area for TO-220FP

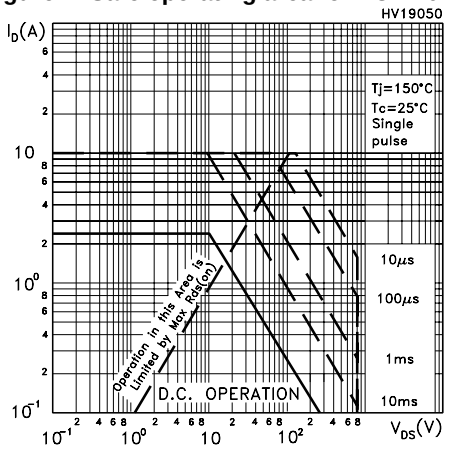

Figure 5: Thermal impedance for TO-220FP

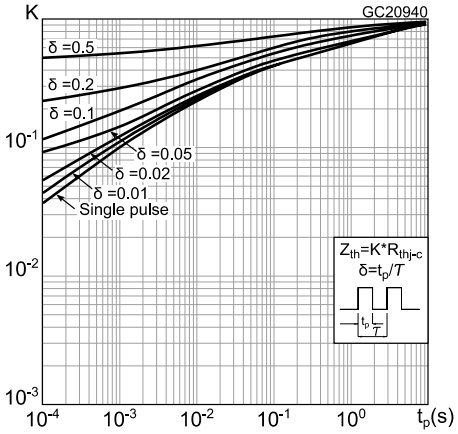

Figure 6: Output characteristics

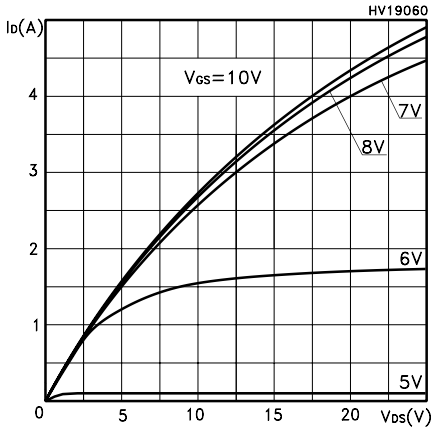

Figure 7: Transfer characteristics

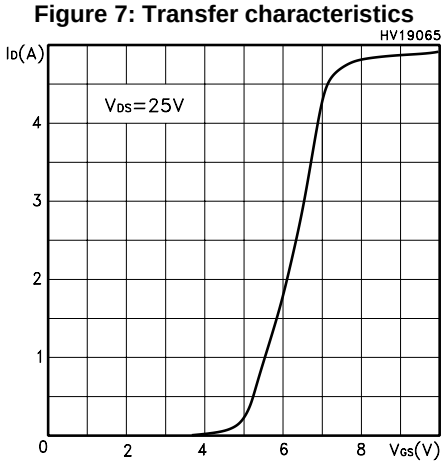

Figure 8: Static drain-source on-resistance

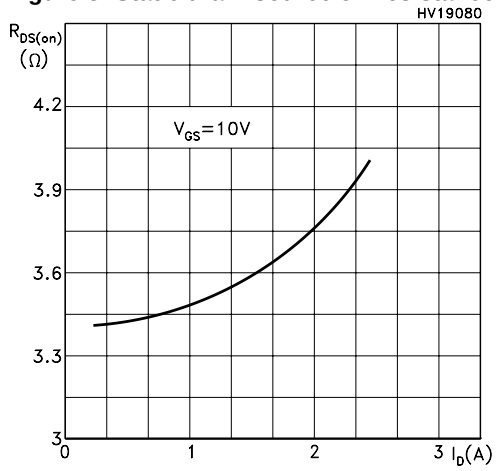

Figure 9: Gate charge vs. gate-source voltage

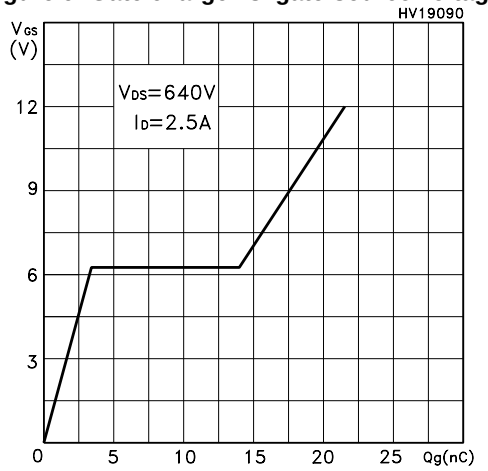

Figure 10: Capacitance variations

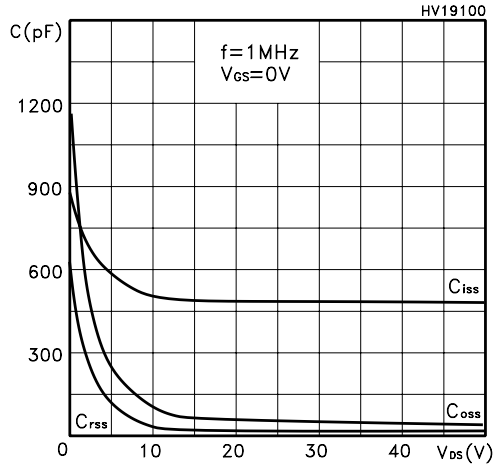

Figure 11: Normalized gate threshold voltage vs. temperature

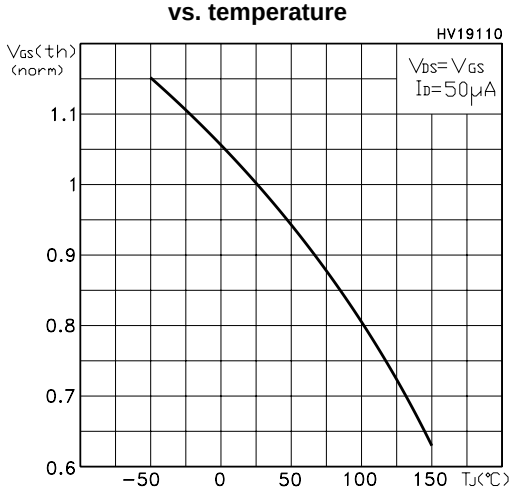

Figure 12: Normalized on-resistance vs. temperature

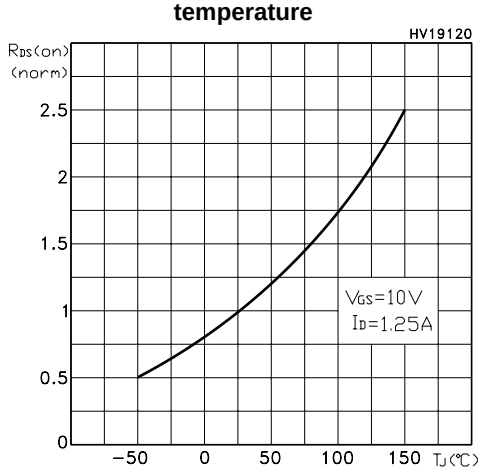

Figure 13: Source-drain diode forward characteristics

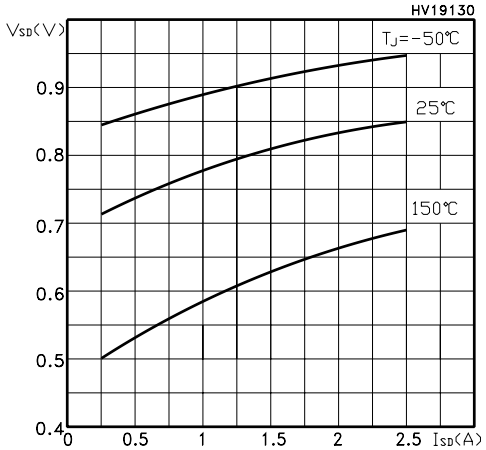

Figure 14: Normalized $V_{(BR)DSS}$ vs. temperature

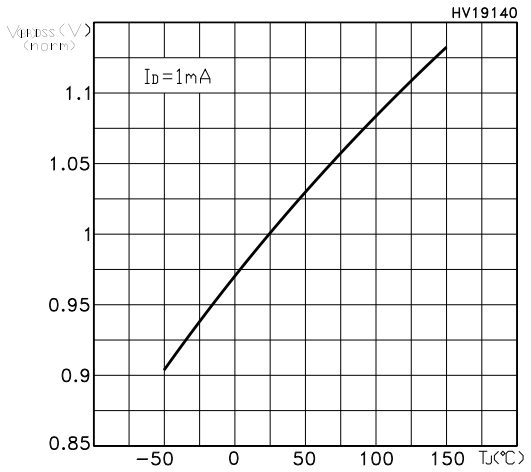

Figure 15: Maximum avalanche energy vs. temperature

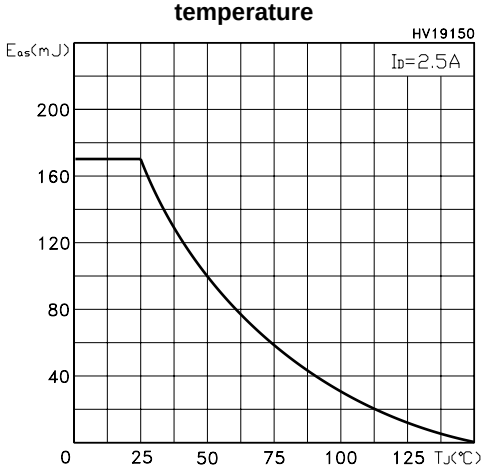

3 Test circuits

Figure 16: Test circuit for resistive load switching times

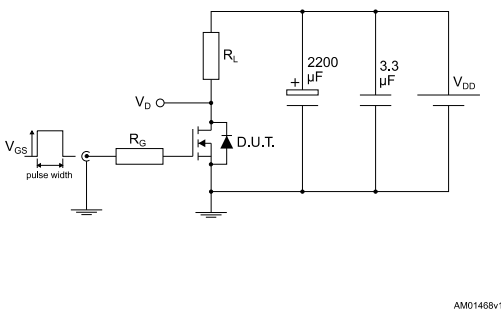

Figure 17: Test circuit for gate charge behavior

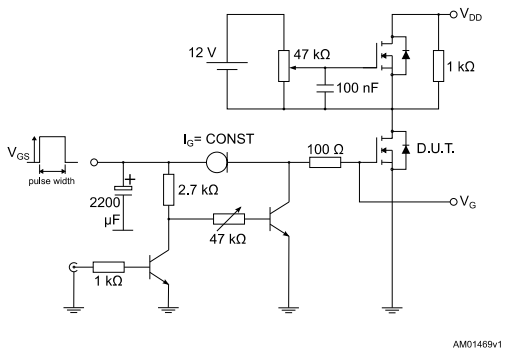

Figure 18: Test circuit for inductive load switching and diode recovery times

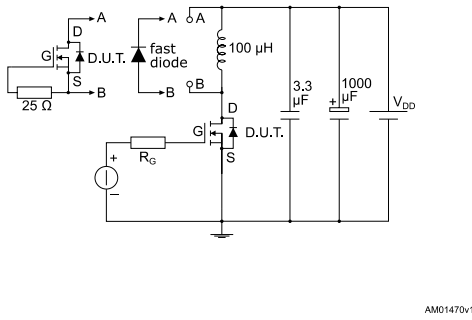

Figure 19: Unclamped inductive load test circuit

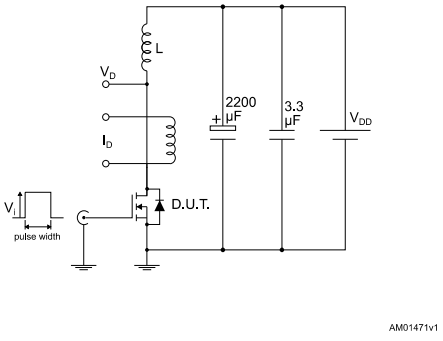

Figure 20: Unclamped inductive waveform

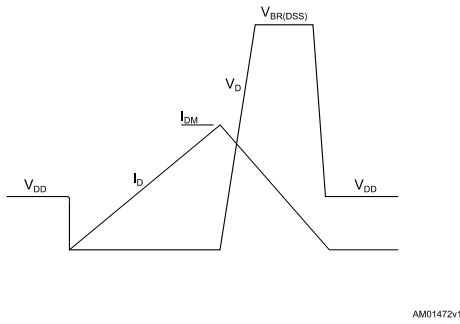

Figure 21: Switching time waveform

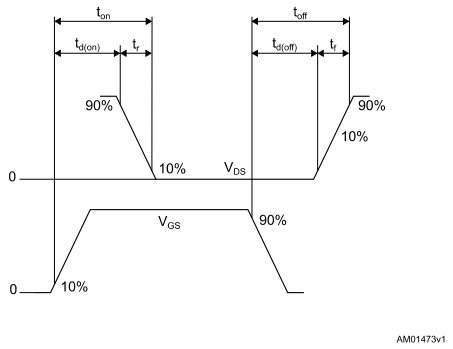

4 Package information

In order to meet environmental requirements, ST offers these devices in different grades of ECOPACK® packages, depending on their level of environmental compliance. ECOPACK® specifications, grade definitions and product status are available at: ***www.st.com***. ECOPACK® is an ST trademark.

4.1 IPAK (TO-251) type A package information

Figure 22: IPAK (TO-251) type A package outline

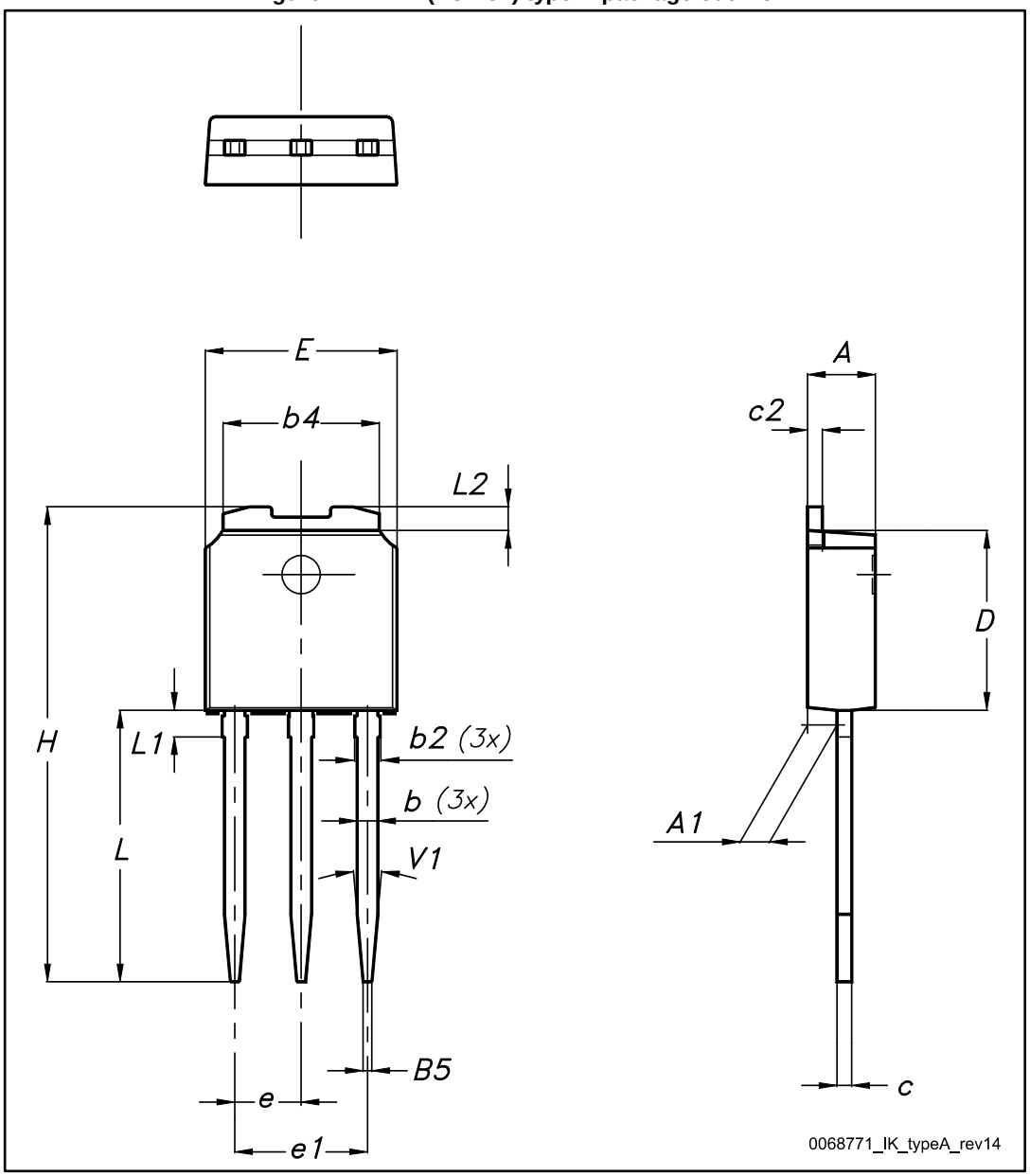

Table 10: IPAK (TO-251) type A package mechanical data

Dim.	mm		
	Min.	Typ.	Max.
A	2.20		2.40
A1	0.90		1.10
b	0.64		0.90
b2			0.95
b4	5.20		5.40
B5		0.30	
c	0.45		0.60
c2	0.48		0.60
D	6.00		6.20
E	6.40		6.60
e		2.28	
e1	4.40		4.60
H		16.10	
L	9.00		9.40
L1	0.80		1.20
L2		0.80	1.00
V1		10°	

4.2 DPAK package information

4.2.1 DPAK (TO-252) type A package information

Figure 23: DPAK (TO-252) type A package outline

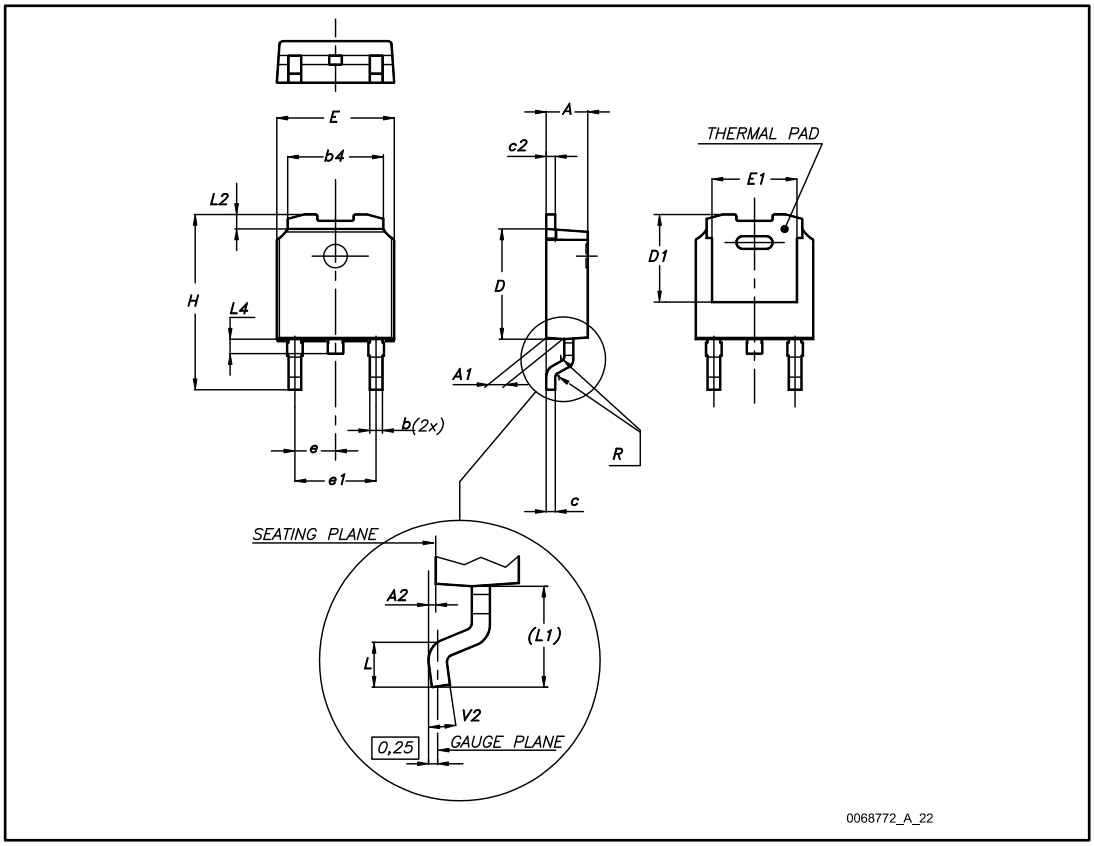

Table 11: DPAK (TO-252) type A mechanical data

Dim.	mm		
	Min.	Typ.	Max.
A	2.20		2.40
A1	0.90		1.10
A2	0.03		0.23
b	0.64		0.90
b4	5.20		5.40
c	0.45		0.60
c2	0.48		0.60
D	6.00		6.20
D1	4.95	5.10	5.25
E	6.40		6.60
E1	4.60	4.70	4.80
e	2.16	2.28	2.40
e1	4.40		4.60
H	9.35		10.10
L	1.00		1.50
(L1)	2.60	2.80	3.00
L2	0.65	0.80	0.95
L4	0.60		1.00
R		0.20	
V2	0°		8°

Figure 24: DPAK (TO-252) type A recommended footprint (dimensions are in mm)

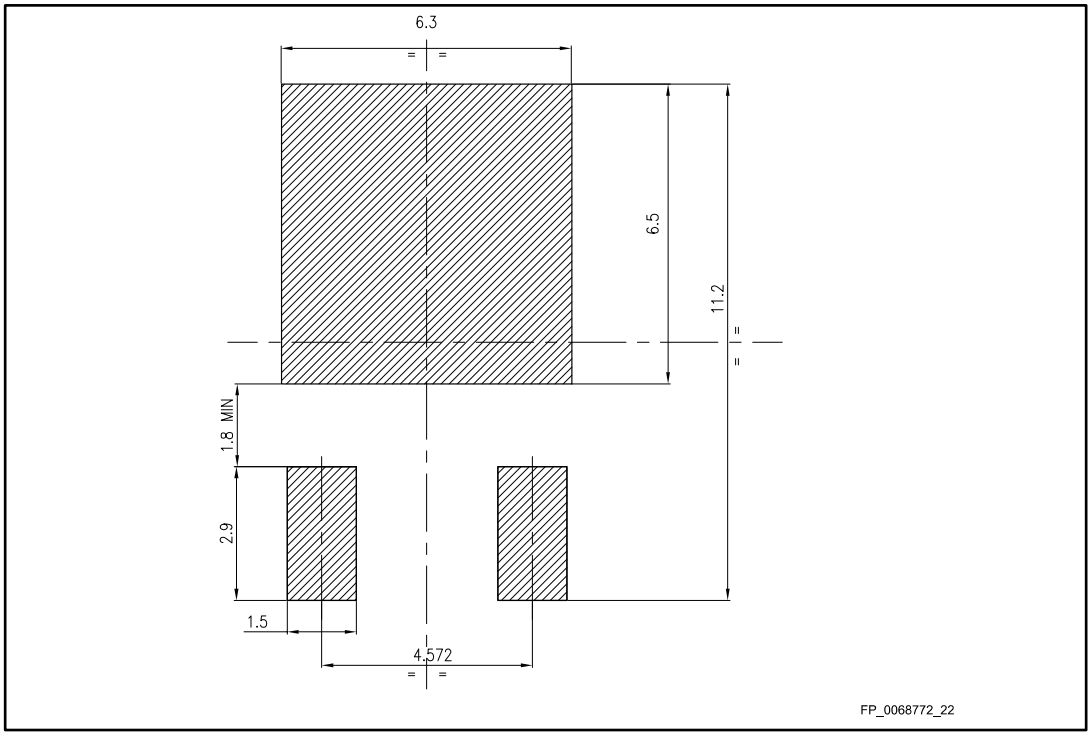

4.2.2 DPAK (TO-252) type C2 package information

Figure 25: DPAK (TO-252) type C2 package outline

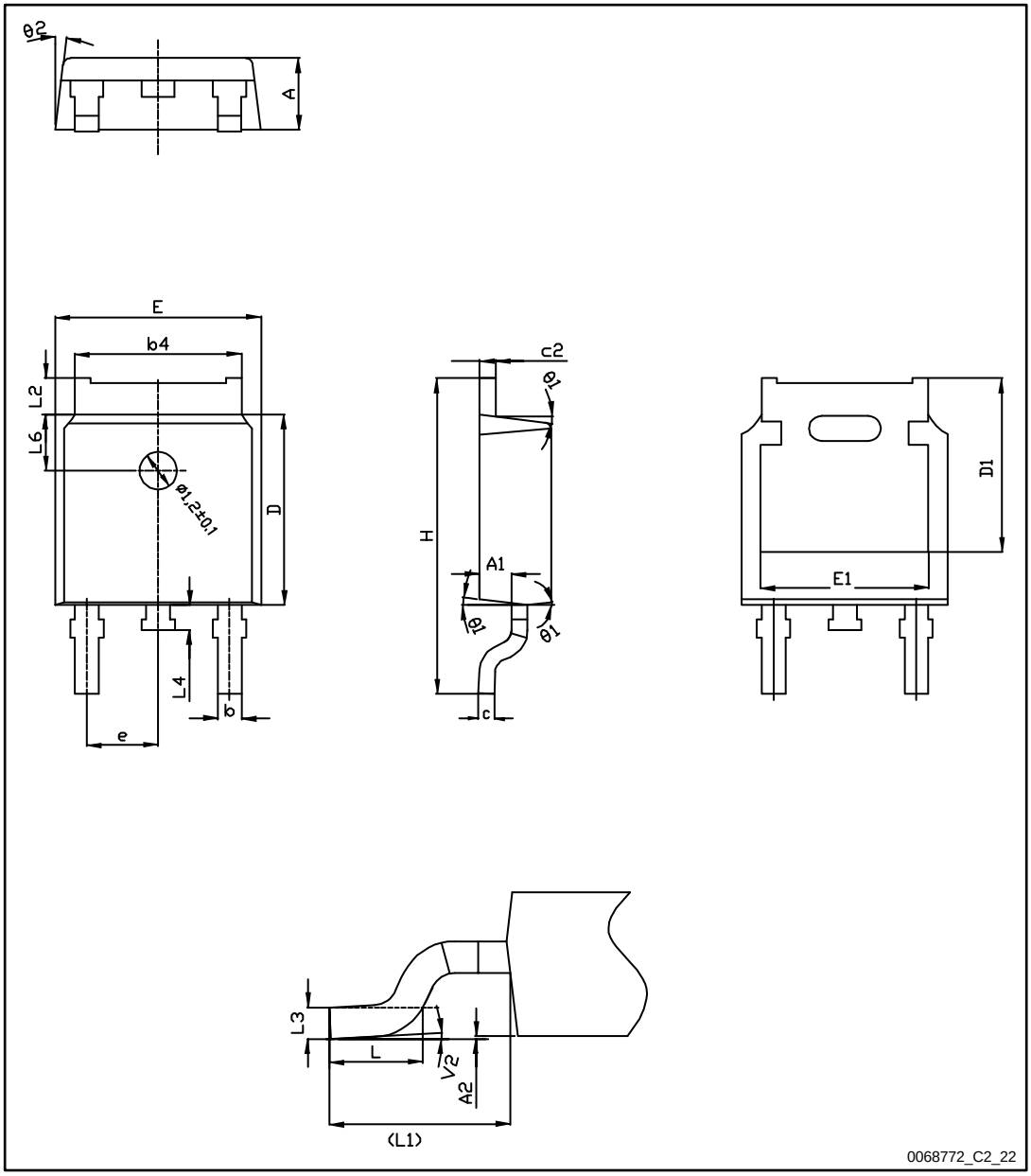

Table 12: DPAK (TO-252) type C2 mechanical data

Dim.	mm		
	Min.	Typ.	Max.
A	2.20	2.30	2.38
A1	0.90	1.01	1.10
A2	0.00		0.10
b	0.72		0.85
b4	5.13	5.33	5.46
c	0.47		0.60
c2	0.47		0.60
D	6.00	6.10	6.20
D1	5.10		5.60
E	6.50	6.60	6.70
E1	5.20		5.50
e	2.186	2.286	2.386
H	9.80	10.10	10.40
L	1.40	1.50	1.70
L1	2.90 REF		
L2	0.90		1.25
L3	0.51 BSC		
L4	0.60	0.80	1.00
L6	1.80 BSC		
θ1	5°	7°	9°
θ2	5°	7°	9°
V2	0°		8°

Figure 26: DPAK (TO-252) type C2 recommended footprint (dimensions are in mm)

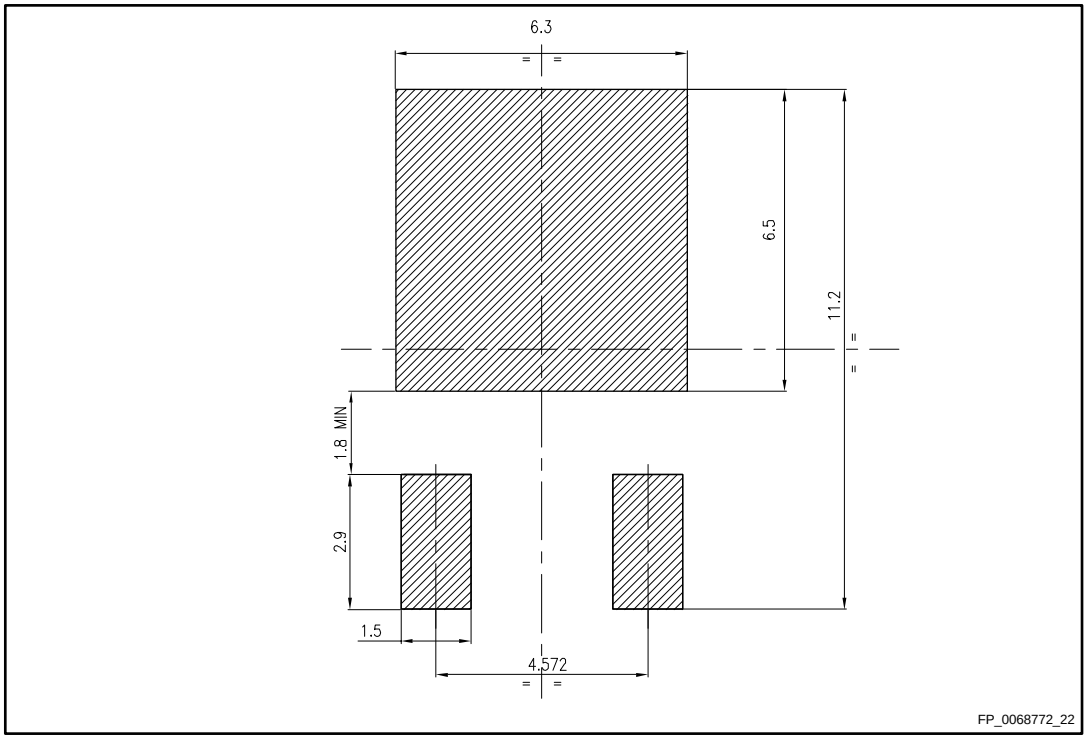

4.2.3 DPAK (TO-252) type E package information

Figure 27: DPAK (TO-252) type E package outline

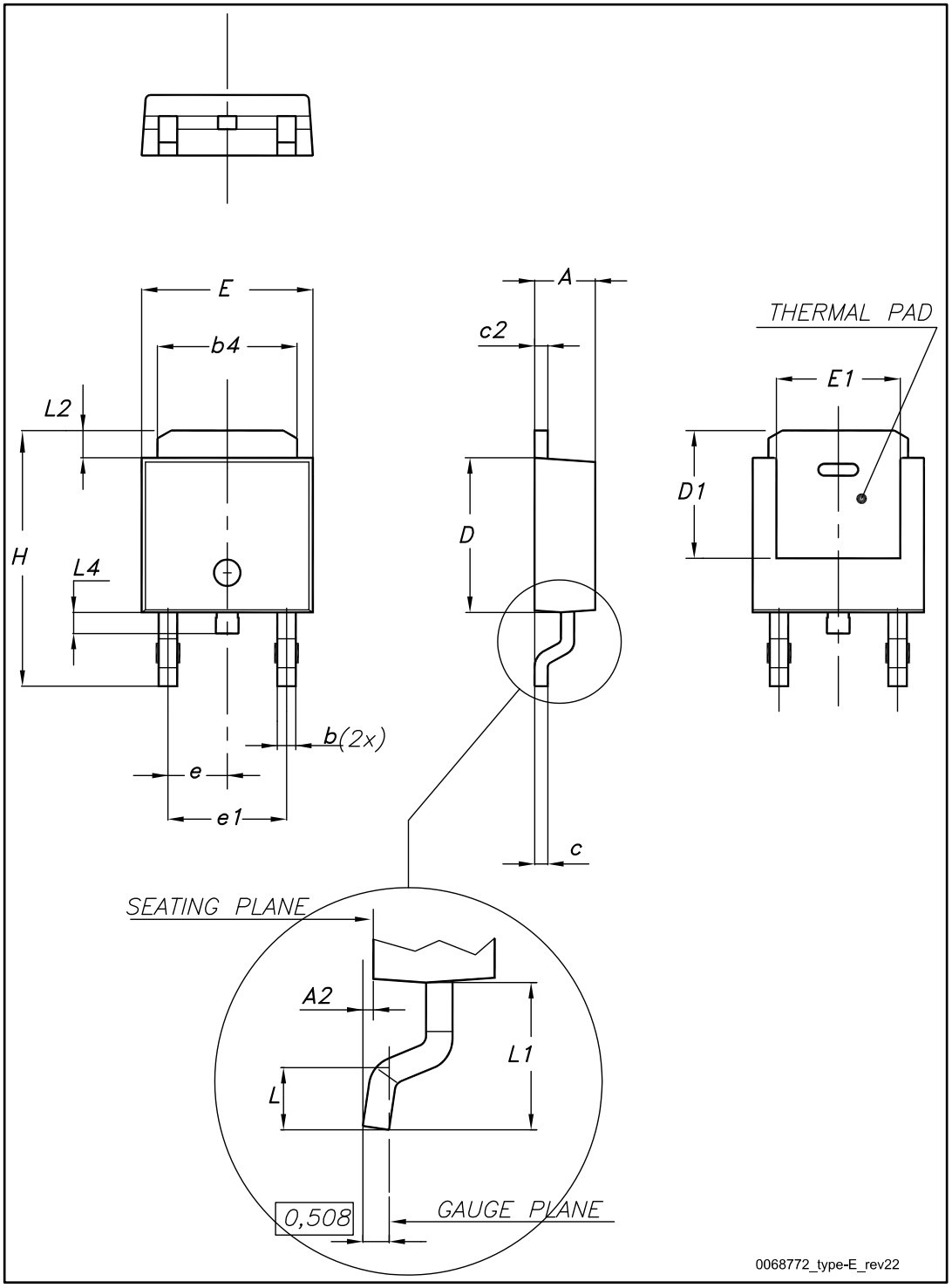

Table 13: DPAK (TO-252) type E mechanical data

Dim.	mm		
	Min.	Typ.	Max.
A	2.18		2.39
A2			0.13
b	0.65		0.884
b4	4.95		5.46
c	0.46		0.61
c2	0.46		0.60
D	5.97		6.22
D1	5.21		
E	6.35		6.73
E1	4.32		
e		2.286	
e1		4.572	
H	9.94		10.34
L	1.50		1.78
L1		2.74	
L2	0.89		1.27
L4			1.02

Figure 28: DPAK (TO-252) type E recommended footprint (dimensions are in mm)

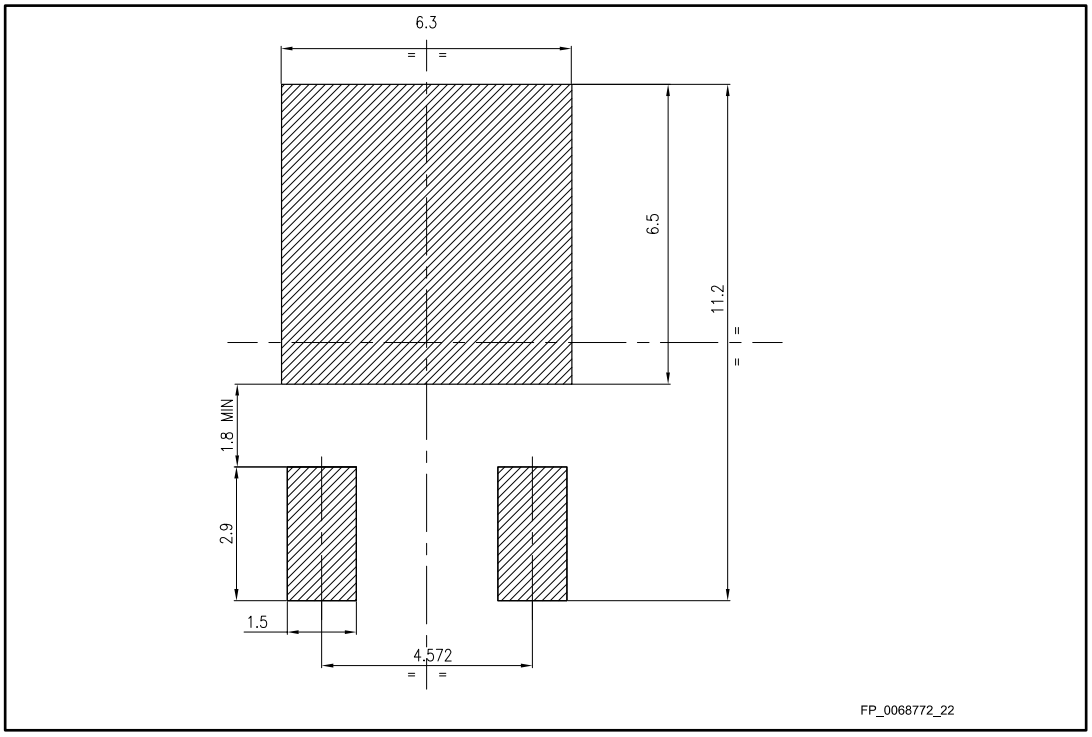

4.2.4 DPAK (TO-252) packing information

Figure 29: DPAK (TO-252) tape outline

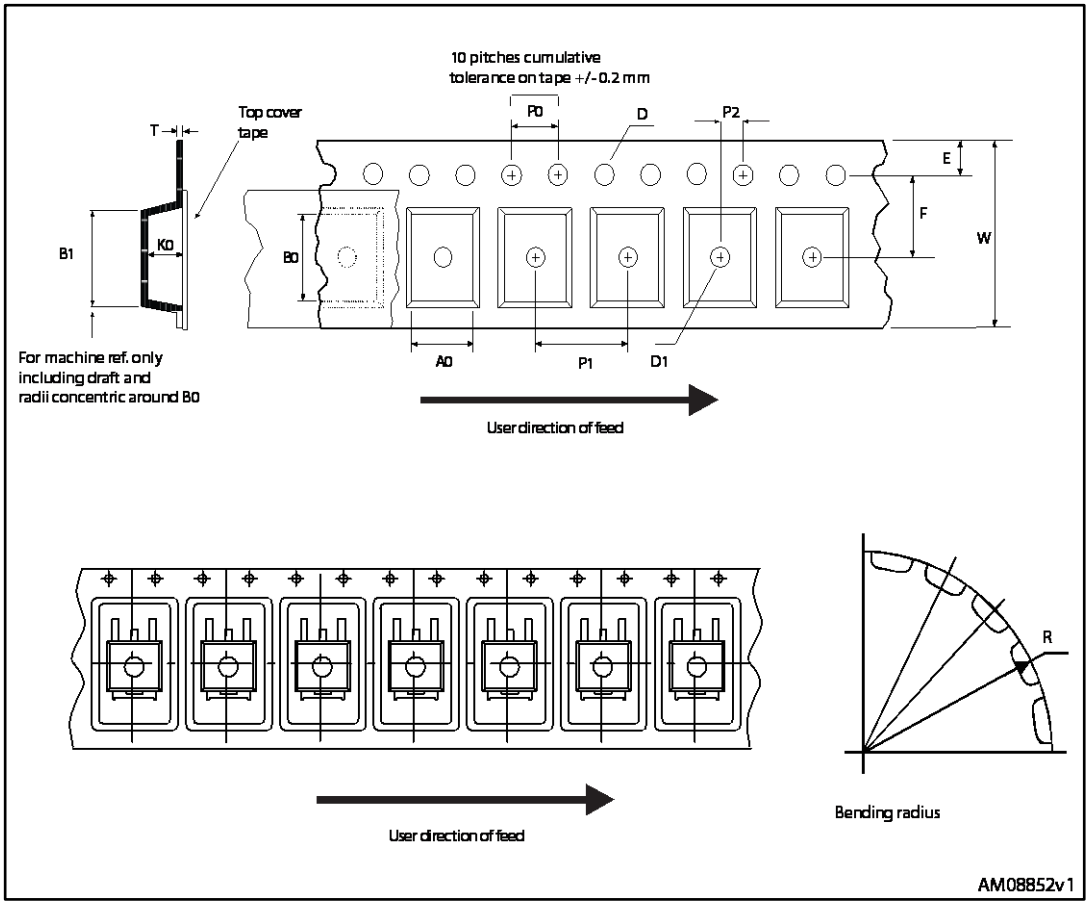

Figure 30: DPAK (TO-252) reel outline

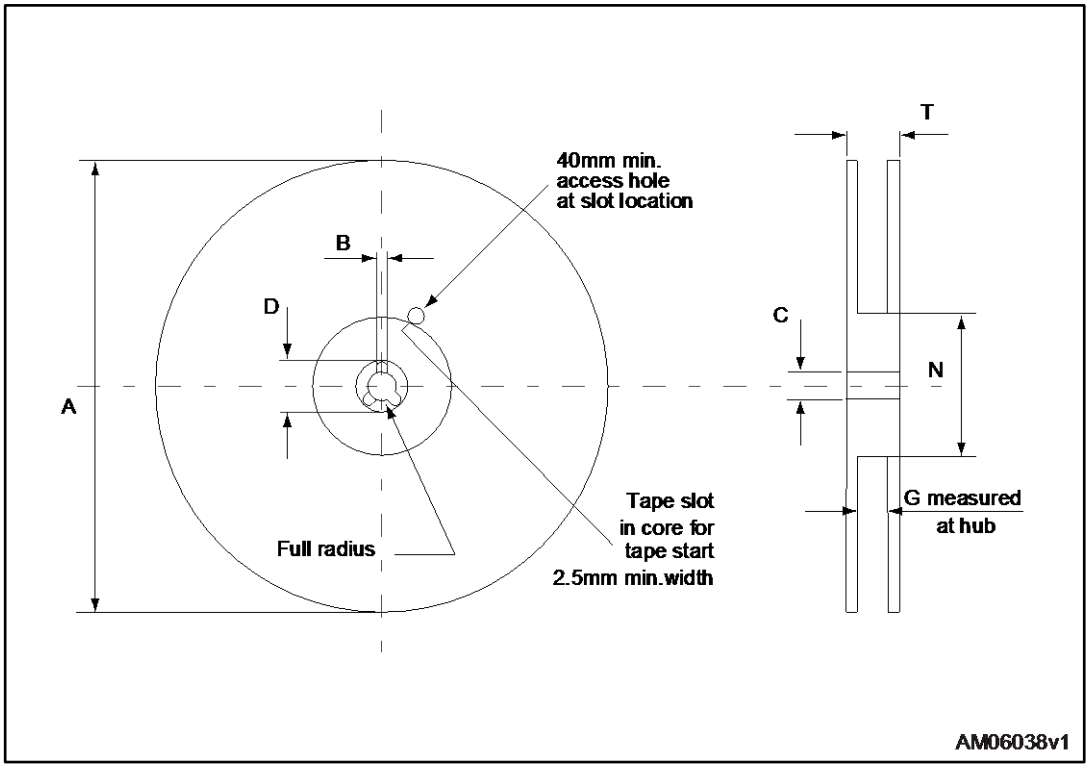

Table 14: DPAK (TO-252) tape and reel mechanical data

Tape			Reel		
Dim.	mm		Dim.	mm	
	Min.	Max.		Min.	Max.
A0	6.8	7	A		330
B0	10.4	10.6	B	1.5	
B1		12.1	C	12.8	13.2
D	1.5	1.6	D	20.2	
D1	1.5		G	16.4	18.4
E	1.65	1.85	N	50	
F	7.4	7.6	T		22.4
K0	2.55	2.75			
P0	3.9	4.1	Base qty.		2500
P1	7.9	8.1	Bulk qty.		2500
P2	1.9	2.1			
R	40				
T	0.25	0.35			
W	15.7	16.3			

4.3 TO-220FP package information

Figure 31: TO-220FP package outline

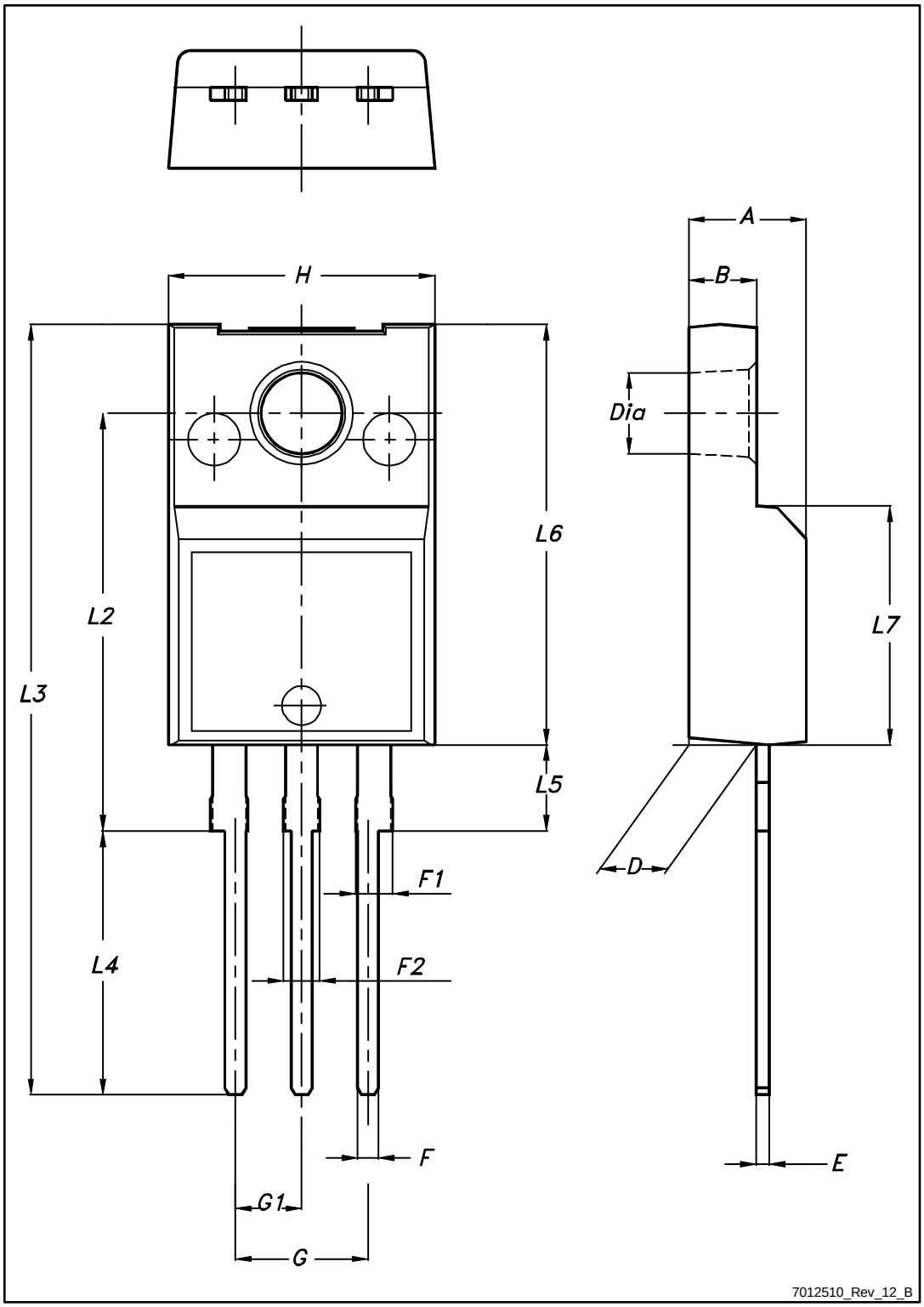

Table 15: TO-220FP package mechanical data

Dim.	mm		
	Min.	Typ.	Max.
A	4.4		4.6
B	2.5		2.7
D	2.5		2.75
E	0.45		0.7
F	0.75		1
F1	1.15		1.70
F2	1.15		1.70
G	4.95		5.2
G1	2.4		2.7
H	10		10.4
L2		16	
L3	28.6		30.6
L4	9.8		10.6
L5	2.9		3.6
L6	15.9		16.4
L7	9		9.3
Dia	3		3.2

4.4 TO-220 package information

4.4.1 TO-220 type A package information

Figure 32: TO-220 type A package outline

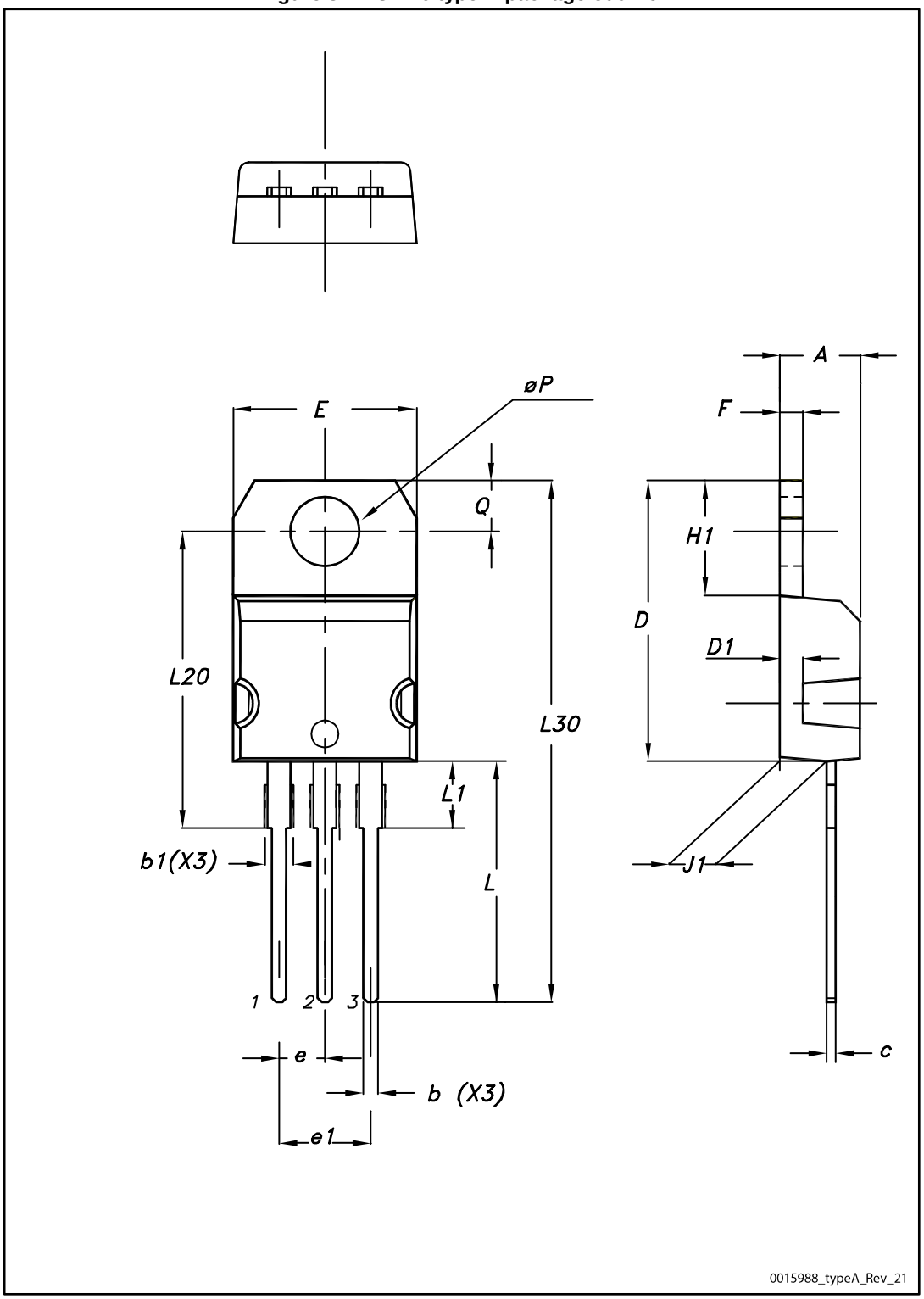

Table 16: TO-220 type A mechanical data

Dim.	mm		
	Min.	Typ.	Max.
A	4.40		4.60
b	0.61		0.88
b1	1.14		1.55
c	0.48		0.70
D	15.25		15.75
D1		1.27	
E	10.00		10.40
e	2.40		2.70
e1	4.95		5.15
F	1.23		1.32
H1	6.20		6.60
J1	2.40		2.72
L	13.00		14.00
L1	3.50		3.93
L20		16.40	
L30		28.90	
øP	3.75		3.85
Q	2.65		2.95

4.4.2 TO-220 type H package information

Figure 33: TO-220 type H package outline

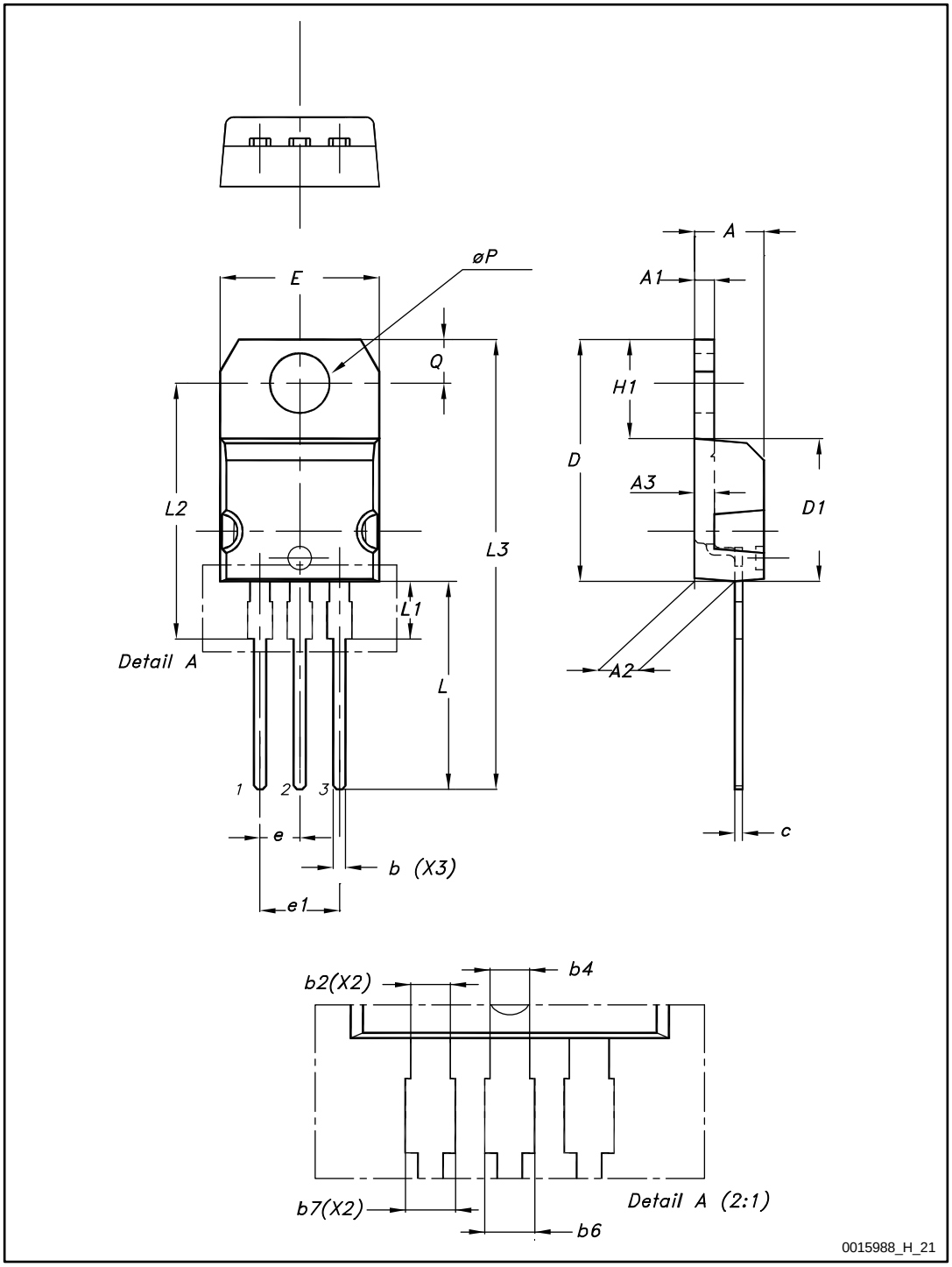

Table 17: TO-220 type H package mechanical data

Dim.	mm		
	Min.	Typ.	Max.
A	4.40	4.45	4.50
A1	1.22		1.32
A2	2.49	2.59	2.69
A3	1.17	1.27	1.37
b	0.78		0.87
b2	1.25		1.34
b4	1.20		1.29
b6			1.50
b7			1.45
c	0.49		0.56
D	15.40	15.50	15.60
D1	9.05	9.15	9.25
E	10.08	10.18	10.28
e	2.44	2.54	2.64
e1	4.98	5.08	5.18
H1	6.25	6.35	6.45
L	13.20	13.40	13.60
L1	3.50	3.70	3.90
L2	16.30	16.40	16.50
L3	28.70	28.90	29.10
ØP	3.75	3.80	3.85
Q	2.70	2.80	2.90

5 Revision history

Table 18: Document revision history

Date	Revision	Changes
09-Sep-2004	3	Complete document
10-Aug-2006	4	New template, no content change
26-Feb-2009	5	Updated mechanical data
07-Sep-2009	6	$V_{ESD(G-S)}$ value has been corrected
06-Apr-2017	7	Updated *Section 1: "Electrical ratings"*, *Section 2: "Electrical characteristics"* and *Section 4: "Package information"*. Minor text changes

IMPORTANT NOTICE – PLEASE READ CAREFULLY

STMicroelectronics NV and its subsidiaries ("ST") reserve the right to make changes, corrections, enhancements, modifications, and improvements to ST products and/or to this document at any time without notice. Purchasers should obtain the latest relevant information on ST products before placing orders. ST products are sold pursuant to ST's terms and conditions of sale in place at the time of order acknowledgement.

Purchasers are solely responsible for the choice, selection, and use of ST products and ST assumes no liability for application assistance or the design of Purchasers' products.

No license, express or implied, to any intellectual property right is granted by ST herein.

Resale of ST products with provisions different from the information set forth herein shall void any warranty granted by ST for such product.

ST and the ST logo are trademarks of ST. All other product or service names are the property of their respective owners.

Information in this document supersedes and replaces information previously supplied in any prior versions of this document.

© 2017 STMicroelectronics – All rights reserved

Общество с ограниченной ответственностью «МосЧип» ИНН 7719860671 / КПП 771901001
Адрес: 105318, г.Москва, ул.Щербаковская д.3, офис 1107

Данный компонент на территории Российской Федерации

Вы можете приобрести в компании MosChip.

Для оперативного оформления запроса Вам необходимо перейти по данной ссылке:

http://moschip.ru/get-element

Вы можете разместить у нас заказ для любого Вашего проекта, будь то серийное производство или разработка единичного прибора.

В нашем ассортименте представлены ведущие мировые производители активных и пассивных электронных компонентов.

Нашей специализацией является поставка электронной компонентной базы двойного назначения, продукции таких производителей как XILINX, Intel (ex.ALTERA), Vicor, Microchip, Texas Instruments, Analog Devices, Mini-Circuits, Amphenol, Glenair.

Сотрудничество с глобальными дистрибьюторами электронных компонентов, предоставляет возможность заказывать и получать с международных складов практически любой перечень компонентов в оптимальные для Вас сроки.

На всех этапах разработки и производства наши партнеры могут получить квалифицированную поддержку опытных инженеров.

Система менеджмента качества компании отвечает требованиям в соответствии с ГОСТ Р ИСО 9001, ГОСТ РВ 0015-002 и ЭС РД 009

Офис по работе с юридическими лицами:

105318, г.Москва, ул.Щербаковская д.3, офис 1107, 1118, ДЦ «Щербаковский»

Телефон: +7 495 668-12-70 (многоканальный)

Факс: +7 495 668-12-70 (доб.304)

E-mail: info@moschip.ru

Skype отдела продаж:
moschip.ru
moschip.ru_4
moschip.ru_6
moschip.ru_9