PolySwitch Resettable Devices
Surface-Mount Devices

PolySwitch surface-mount devices are an effective circuit protection method for computer, consumer, multimedia, portable and automotive electronics applications.

In an affort to reduce the size and cost of surface-mount devices, TE Circuit Protection introduced the miniSMD product series in 1995. Subsequently, we developed the microSMD, nanoSMD, picoSMD and femtoSMD family of products. The femtoSMD series reduced the device size to a 1608mm (0603 mils) footprint, which is one-twelfth the size of the popular miniSMD series.

Recent additions to the PolySwitch surface-mount series include 1.1A picoSMD 1210mm (0805 mils) and 0.35A femtoSMD 1608mm (0603 mils) devices.

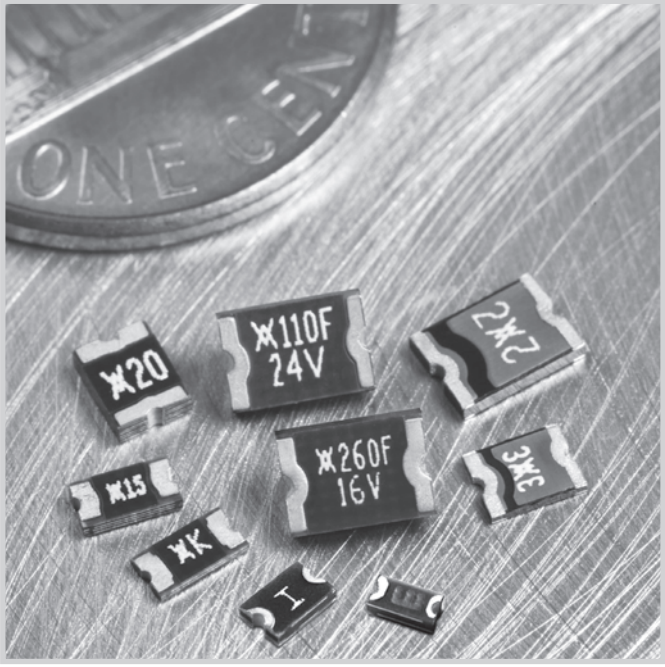

Benefits

- Smaller size helps save board space and cost
- Many product choices optimizes design flexibility
- Compatible with high-volume electronics assembly
- Assists in meeting regulatory requirements
- Higher voltage ratings allow use in new applications

Features

- RoHS compliant
- Halogen free
  (refers to: Br≤900ppm, Cl≤900ppm, Br+Cl≤1500ppm)
- Broadest range of resettable devices available in the industry
- Current ratings from 0.05 to 3A
- Voltage ratings from 6V computer and electronic applications to 60V telecom applications
- Agency recognition: UL, CSA, TÜV
- Small footprint
- Fast time-to-trip
- Low resistance

Applications

- Computer
- Portable electronics
- Multimedia
- Game machines
- Telephony and broadband
- Mobile phones
- Automotive
- Industrial controls
- Battery

Application Selection Table for PolySwitch Surface-Mount Devices

- The table below lists PolySwitch surface-mount devices recommended for use in typical applications
- Specifications for the suggested PolySwitch surface-mount device part numbers can be found in this table
- Once a part has been selected, the user should evaluate and test each product for the intended application

			PolySwitch Resettable Devices - Key Selection Criteria		
Protection Application	**Additional Comments**	**Overcurrent Overvoltage**	**Small Size**	**Low Resistance**	**Fast Time-to-trip (Temperature Protection)**
AC Adapter Input Power	Use w/ Zener and Triac		SMD250F	SMD250F	SMD200F
Battery Pack Protection			nanoSMDC150F	miniSMDC260F	miniSMDC200F/16
Charger Protection			nanoSMDC050F	miniSMDC110F/16	nanoSMDC075F
CPU/IC Protection			nanoSMDC110F	nanoSMDC150F	nanoSMDC075F
Data Acquisition/Sensor			microSMD005F	-	microSMD005F
DC Input/Output Power	≤6V		nanoSMDC075F	nanoSMDC150F	nanoSMDC050F/13.2
	≤12V		miniSMDC075F	miniSMDC110F/16	miniSMDC075F
DDC			nanoSMDC075F	nanoSMDC110F	nanoSMDC050F/13.2
Device Bay System	DB12, DB20		miniSMDC200F	miniSMDC260F	miniSMDC200F
	DB32		miniSMDC260F	SMD300F	miniSMDC200F
Ethernet/LAN			nanoSMDC050F/13.2	miniSMDC110F/16	nanoSMDC075F
Fan			microSMD035F	microSMD050F	microSMD035F
HDMI			picoSMDC035S	picoSMDC035S	picoSMDC035S
IEEE 802.3af	VoIP		decaSMDC050F/60	decaSMDC050F/60	decaSMDC050F/60
IEEE-1394	Power Provider		SMD100F/33	SMD185F	SMD100F/33
	Alt. Power Provider		SMD185F	SMD185F	SMD150F/33
	Self-Powered		SMD185F	SMD185F	SMD150F/33
LCD Inverter			nanoSMDC050F/13.2	miniSMDC110F/16	nanoSMDC075F
LCD Screen Power			nanoSMDC050F/13.2	nanoSMDC050F/13.2	microSMD035F
LNB (Low Noise Block)			SMD075F	SMD075F	SMD050F
Motor	≤6V		nanoSMDC110F	nanoSMDC150F	microSMD075F
	≤13.2V		miniSMDC075F	miniSMDC110F/16	miniSMDC075F
PS/2 Mouse/Keyboard			nanoSMDC075F	nanoSMDC110F	nanoSMDC050F/13.2
Signal - Data Communication	≤6V		nanoSMDC075F	nanoSMDC075F	nanoSMDC075F
	≤13.2V		miniSMDC050F	miniSMDC075F	miniSMDC020F
	≤30V		SMD030F-2018	SMD075F	SMD050F
SCSI			nanoSMDC110F	nanoSMDC150F	nanoSMDC075F
SIM/Smart Card Reader			femtoSMDC010F	femtoSMDC010F	femtoSMDC005F
Telecom - Modem	Digital Line	OC	miniSMDC014F	miniSMDC014F	miniSMDC014F
Telecom - PBX	Subscriber	OC	miniSMDC014F	miniSMDC014F	miniSMDC014F
Temperature Sensor	CPU		nanoSMDC050F/13.2	nanoSMDC075F	nanoSMDC050F/13.2
USB	Individual Port		nanoSMDC075F	nanoSMDC110F	nanoSMDC050F/13.2
	2 Port Ganged		nanoSMDC150F	miniSMDC150F	miniSMDC125F
	3 Port Ganged		miniSMDC200F	miniSMDC200F	miniSMDC200F

Note : This list is not exhaustive. TE Circuit Protection welcomes our customers' input for additional application ideas for PolySwitch resettable devices.

Table S1 Product Series: Size, Current Rating, Voltage Rating/Maximum Resistance for PolySwitch Surface-Mount Devices

	femtoSMD	picoSMD	nanoSMD	microSMD	miniSMD	midSMD	SMD	SMD2	decaSMD
Size mm (mils)	1608 (0603)	2012 (0805)	3216 (1206)	3225 (1210)	4532 (1812)	5050 (2018)	7555 (2920)	8763 (3425)	5050 (2018)
Hold Current (A)									
0.050	15V_{DC}/30.00Ω	—	—	30V_{DC}/50Ω	—	—	—	—	—
0.080	12V_{DC}/14.00Ω	—	—	—	—	—	—	—	—
0.100	12V_{DC}/8.00Ω	15V_{DC}/11.00Ω	—	30V_{DC}/15Ω	60V_{DC}/12.70Ω	—	—	—	—
0.120	9V_{DC}/5.80Ω	15V_{DC}/9.00Ω	48V_{DC}/6.50Ω	—	—	—	—	—	—
0.140	—	—	—	—	60V_{DC}/6.00Ω	—	—	—	—
0.160	9V_{DC}/4.20Ω	—	48V_{DC}/5.00Ω	—	—	—	—	—	—
0.200	9V_{DC}/3.00Ω	9V_{DC}/3.20Ω	24V_{DC}/3.10Ω	—	30V_{DC}/3.30Ω	—	—	—	—
0.250	—		16V_{DC}/2.30Ω	—	—	—	—	—	—
0.300	—	—	—	—	30V_{DC}/1.75Ω	60V_{DC}/2.30Ω	60V_{DC}/4.80Ω	—	—
0.350	6V_{DC}/1.40Ω	6V_{DC}/1.40Ω	16V_{DC}/1.35Ω	6V_{DC}/1.30Ω	—	—	—	—	—
0.500	—	6V_{DC}/0.80Ω	13.2V_{DC}/0.75Ω	13.2V_{DC}/0.90Ω	24V_{DC}/1.00Ω	—	60V_{DC}/1.40Ω	—	60V_{DC}/1.10Ω
0.750	—	6V_{DC}/0.35Ω	6V_{DC}/0.30Ω	6V_{DC}/0.40Ω	13.2V_{DC}/0.45Ω	—	30V_{DC}/1.00Ω	—	—
	—	—	—	—	24V_{DC}/0.29Ω	—	60V_{DC}/1.00Ω	—	—
	—	—	—	—	33V_{DC} /0.39Ω	—	—	—	—
1.000	—	—	—	—	—	15V_{DC}/0.40Ω	30V_{DC}/0.48Ω	—	—
	—	—	—	—	—	—	33V_{DC}/0.41Ω	—	—
1.100	—	6V_{DC}/0.17Ω	6V_{DC}/0.20Ω	6V_{DC}/0.21Ω	8V_{DC}/0.21Ω	—	—	—	—
	—	—	—	—	16V_{DC}/0.18Ω	—	—	—	—
	—	—	—	—	24V_{DC}/0.18Ω	—	—	—	—
1.200	—	—	—	—	—	—	16V_{DC}/0.34Ω	—	—
1.250	—	—	—	—	6V_{DC}/0.14Ω	—	15V_{DC}/0.25Ω	—	—
	—	—	—	—	16V_{DC}/0.14Ω	—	—	—	—
1.500	—	—	6V_{DC}/0.11Ω	6V_{DC}/0.11Ω	6V_{DC}/0.11Ω	15V_{DC}/0.18Ω	33V_{DC}/0.23Ω	15V_{DC}/0.25Ω	—
	—	—	—	—	12V_{DC}/0.11Ω	—	—	33V_{DC}/0.23Ω	—
	—	—	—	—	16V_{DC}/0.11Ω	—	—	—	—
	—	—	—	—	24V_{DC}/0.12Ω	—	—	—	—
1.600	—	—	—	—	9V_{DC}/0.10Ω	—	—	16V_{DC}/0.15Ω	—
1.750	—	—	—	6V_{DC}/0.08Ω	—	—	—	—	—
1.850	—	—	—	—	—	—	—	33V_{DC}/0.165Ω	—
2.000	—	—	6V_{DC}/0.072Ω	6V_{DC}/0.06ΩΩ	8V_{DC}/0.07Ω	6V_{DC}/0.10Ω	24V_{DC}/0.125Ω	15V_{DC}/0.125Ω	—
	—	—	—	—	16V_{DC}/0.085Ω	—	—	—	—
2.500	—	—	—	—	—	—	15V_{DC}/0.085Ω	15V_{DC}/0.85Ω	—
2.600	—	—	—	—	6V_{DC}/0.043Ω	—	6V_{DC}/0.075Ω	—	—
	—	—	—	—	12V_{DC}/0.047Ω	—	—	—	—
	—	—	—	—	13.2V_{DC}/0.050Ω	—	—	—	—
	—	—	—	—	16V_{DC}/0.050Ω	—	—	—	—
3.000	—	—	—	—	6V_{DC}/0.036Ω	—	6V_{DC}/0.048Ω	—	—
	—	—	—	—	—	—	15V_{DC}/0.05Ω	—	—

Table S2 Thermal Derating for PolySwitch Surface-Mount Devices [Hold Current (A) at Ambient Temperature (°C)]

	Part Number	Maximum Ambient Temperature -40°C	-20°C	0°C	20°C	25°C	40°C	50°C	60°C	70°C	80°C	85°C	125°C
	femtoSMDC Series Size 1608mm/0603mils												
	femtoSMDC005F	0.08	0.07	0.06	0.05	0.05	0.04	0.04	0.03	0.03	0.02	0.02	—
	femtoSMDC008F	0.13	0.11	0.10	0.08	0.08	0.07	0.06	0.06	0.05	0.04	0.04	—
	femtoSMDC010F	0.16	0.14	0.12	0.11	0.10	0.09	0.08	0.07	0.06	0.05	0.04	—
	femtoSMDC012F	0.18	0.16	0.14	0.12	0.12	0.11	0.10	0.08	0.08	0.07	0.06	—
	femtoSMDC016F	0.25	0.22	0.18	0.17	0.16	0.14	0.12	0.11	0.10	0.08	0.07	—
	femtoSMDC020F	0.30	0.27	0.24	0.20	0.20	0.17	0.16	0.14	0.12	0.11	0.10	—
	femtoSMDC035F	0.53	0.47	0.41	0.36	0.35	0.30	0.27	0.25	0.22	0.19	0.17	—
	picoSMDC Series Size 2012mm/0805mils												
	picoSMDC010S	0.17	0.15	0.13	0.11	0.10	0.09	0.08	0.07	0.06	0.05	0.05	—
	picoSMDC012S	0.20	0.17	0.15	0.13	0.12	0.10	0.09	0.08	0.07	0.06	0.05	—
	picoSMDC020S	0.30	0.27	0.24	0.21	0.20	0.18	0.16	0.15	0.13	0.12	0.11	—
	picoSMDC035S	0.55	0.49	0.44	0.37	0.35	0.31	0.28	0.26	0.23	0.20	0.18	—
	picoSMDC050S	0.70	0.62	0.55	0.55	0.50	0.43	0.38	0.33	0.30	0.28	0.26	—
NEW	picoSMDC075S	1.13	1.01	0.90	0.78	0.75	0.67	0.61	0.55	0.49	0.43	0.40	—
NEW	picoSMDC110S	1.64	1.47	1.30	1.14	1.10	0.97	0.89	0.80	0.72	0.64	0.59	—
	nanoSMDC Series Size 3216mm/1206mils												
	nanoSMDC012F	0.20	0.17	0.15	0.13	0.12	0.11	0.10	0.09	0.08	0.07	0.07	—
	nanoSMDC016F	0.21	0.20	0.18	0.16	0.16	0.14	0.13	0.12	0.11	0.10	0.09	—
	nanoSMDC020F	0.34	0.30	0.26	0.22	0.20	0.17	0.15	0.13	0.11	0.09	0.08	—
	nanoSMDC025F	0.38	0.33	0.30	0.26	0.25	0.22	0.20	0.19	0.16	0.13	0.11	—
	nanoSMDC035F	0.58	0.51	0.44	0.38	0.35	0.31	0.28	0.24	0.21	0.18	0.16	—
	nanoSMDC050F/13.2	0.78	0.69	0.61	0.52	0.50	0.44	0.39	0.35	0.30	0.25	0.24	—
	nanoSMDC075F	1.15	1.04	0.92	0.78	0.75	0.69	0.63	0.58	0.51	0.46	0.43	—
	nanoSMDC110F	1.64	1.46	1.30	1.10	1.06	0.92	0.83	0.80	0.65	0.56	0.52	—
	nanoSMDC150F	2.20	1.99	1.77	1.55	1.50	1.34	1.23	1.10	1.01	0.90	0.84	—
	nanoSMDC200F	2.92	2.64	2.35	2.07	2.00	1.79	1.64	1.50	1.36	1.22	1.15	—
	microSMD Series Size 3225mm/1210mils												
	microSMD005F	0.08	0.07	0.06	0.05	0.05	0.04	0.04	0.03	0.03	0.02	0.02	—
	microSMD010F	0.15	0.13	0.12	0.10	0.10	0.09	0.08	0.06	0.06	0.05	0.05	—
	microSMD035F	0.51	0.46	0.40	0.35	0.34	0.30	0.27	0.24	0.22	0.19	0.18	—
	microSMD050F	0.76	0.66	0.58	0.50	0.48	0.42	0.38	0.35	0.29	0.25	0.23	—
	microSMD075F	1.10	0.97	0.86	0.75	0.72	0.64	0.58	0.55	0.47	0.42	0.39	—
	microSMD110F	1.60	1.42	1.26	1.10	1.06	0.94	0.86	0.80	0.70	0.62	0.58	—
	microSMD150F	2.30	2.02	1.76	1.50	1.43	1.24	1.11	1.00	0.85	0.72	0.65	—
	microSMD175F	2.80	2.45	2.10	1.75	1.70	1.55	1.45	1.35	1.25	1.15	1.10	—
	microSMD200F	2.60	2.44	2.35	2.00	1.96	1.78	1.67	1.50	1.45	1.15	1.10	—
	miniSMDC Series Size 4532mm/1812mils												
	miniSMDC010F	0.17	0.15	0.13	0.11	0.10	0.09	0.08	0.07	0.06	0.05	0.04	—
	miniSMDC014F	0.23	0.20	0.17	0.14	0.13	0.11	0.10	0.09	0.07	0.06	0.05	—
	miniSMDC020F	0.30	0.27	0.23	0.20	0.19	0.17	0.15	0.13	0.12	0.10	0.09	—
	miniSMDC030F	0.49	0.44	0.39	0.32	0.30	0.27	0.24	0.22	0.18	0.16	0.14	—
	miniSMDC050F	0.59	0.57	0.55	0.50	0.48	0.45	0.43	0.35	0.30	0.25	0.23	—
	miniSMDC075F	1.10	0.99	0.87	0.75	0.72	0.63	0.57	0.49	0.45	0.39	0.35	—
	miniSMDC075F/24	1.50	1.25	1.00	0.75	0.73	0.65	0.60	0.55	0.50	0.45	0.43	—
NEW	miniSMDC075F/33	1.09	0.98	0.87	0.77	0.75	0.66	0.61	0.55	0.50	0.45	0.42	—
	miniSMDC100F	1.60	1.45	1.28	1.10	1.07	0.92	0.83	0.71	0.66	0.57	0.52	—

RoHS Compliant, ELV Compliant HF Halogen Free

Table S2 Thermal Derating for PolySwitch Surface-Mount Devices [Hold Current (A) at Ambient Temperature (°C)]

Cont'd

Part Number	Maximum Ambient Temperature -40°C	-20°C	0°C	20°C	25°C	40°C	50°C	60°C	70°C	80°C	85°C	125°C
miniSMDC Series Size 4532mm/1812mils												
miniSMDC110F	1.60	1.45	1.28	1.10	1.07	0.92	0.83	0.71	0.66	0.57	0.52	—
miniSMDC110F/16	1.68	1.49	1.30	1.10	1.05	0.92	0.83	0.75	0.64	0.55	0.50	—
miniSMDC110F/24	2.00	1.70	1.40	1.10	1.06	0.95	0.88	0.80	0.73	0.65	0.61	—
miniSMDC125F	2.00	1.69	1.47	1.25	1.17	1.03	0.92	0.90	0.69	0.58	0.53	—
miniSMDC125F/16	2.00	1.69	1.47	1.25	1.17	1.03	0.92	0.90	0.69	0.58	0.53	—
miniSMDC150F	2.30	2.05	1.77	1.50	1.44	1.23	1.09	0.95	0.82	0.68	0.61	—
miniSMDC150F/12	2.40	2.10	1.80	1.50	1.44	1.25	1.13	1.00	0.88	0.75	0.69	—
miniSMDC150F/16	2.40	2.10	1.80	1.50	1.44	1.25	1.13	1.00	0.88	0.75	0.69	—
miniSMDC150F/24	2.10	1.90	1.70	1.50	1.44	1.25	1.13	1.00	0.88	0.75	0.69	—
miniSMDC160F	2.50	2.19	1.89	1.60	1.53	1.31	1.16	1.10	0.95	0.79	0.71	—
miniSMDC200F	2.60	2.44	2.22	2.00	1.96	1.78	1.67	1.50	1.45	1.34	1.29	—
NEW miniSMDC200F/16	3.07	2.74	2.40	2.07	2.00	1.74	1.57	1.40	1.24	1.07	0.99	—
miniSMDC260F	3.40	3.16	2.80	2.60	2.54	2.32	2.18	2.00	1.90	1.76	1.69	—
miniSMDC260F/12	3.40	3.16	3.00	2.60	2.54	2.32	2.18	2.00	1.90	1.76	1.69	—
miniSMDC260F/13.2	3.40	3.16	3.00	2.60	2.54	2.32	2.18	2.00	1.90	1.76	1.69	—
miniSMDC260F/16	3.50	3.20	3.00	2.60	2.53	2.30	2.15	2.00	1.85	1.70	1.63	—
miniSMDC300F	4.13	3.75	3.33	3.02	3.00	2.70	2.54	2.35	2.22	2.06	1.98	—
midSMD Series Size 5050mm/2018mils												
SMD030F-2018	0.48	0.42	0.35	0.30	0.28	0.24	0.21	0.17	0.15	0.12	0.10	—
decaSMDC050F/60	1.00	0.85	0.70	0.55	0.53	0.45	0.40	0.35	0.30	0.25	0.23	—
SMD100F-2018	1.59	1.43	1.20	1.10	1.03	0.94	0.85	0.72	0.69	0.61	0.57	—
SMD150F-2018	2.21	1.97	1.70	1.50	1.43	1.26	1.15	1.00	0.91	0.79	0.73	—
SMD200F-2018	2.81	2.54	2.27	2.00	1.93	1.73	1.59	1.46	1.32	1.19	1.12	—
SMD Series Size 7555mm/2920mils												
SMD030F	0.44	0.39	0.32	0.30	0.28	0.26	0.23	0.19	0.18	0.17	0.15	—
SMD050F	0.73	0.65	0.55	0.50	0.47	0.43	0.39	0.33	0.31	0.28	0.26	—
SMD075F	1.11	0.99	0.84	0.75	0.71	0.63	0.57	0.49	0.45	0.39	0.36	—
SMD075F/60	1.11	0.99	0.84	0.75	0.71	0.63	0.57	0.49	0.45	0.39	0.36	—
SMD100F	1.59	1.43	1.20	1.10	1.03	0.94	0.85	0.72	0.69	0.61	0.57	—
SMD100F/33	1.48	1.35	1.20	1.10	1.06	0.98	0.91	0.83	0.79	0.73	0.69	—
SMDH120	2.34	1.96	1.58	1.20	1.15	1.02	0.92	0.83	0.74	0.65	0.60	0.26
SMD125F	1.89	1.68	1.50	1.25	1.21	1.04	0.93	0.85	0.71	0.61	0.55	—
NEW SMD150F/33-2920	2.27	2.01	1.76	1.50	1.44	1.25	1.12	0.99	0.86	0.74	0.67	—
NEW SMD200F/24-2920	2.90	2.60	2.30	2.00	1.93	1.70	1.55	1.40	1.25	1.10	1.03	—
NEW SMD250F/15-2920	3.65	3.25	2.80	2.50	2.33	2.02	1.82	1.60	1.41	1.20	1.11	—
SMD260F	3.82	3.41	2.90	2.60	2.45	2.19	1.99	1.70	1.58	1.38	1.28	—
SMD300F	4.13	3.75	3.30	3.00	2.87	2.62	2.43	2.25	2.00	1.87	1.78	—
SMD300F/15	4.20	3.80	3.30	3.00	2.90	2.62	2.43	2.25	2.00	1.87	1.78	—
SMD2 Series Size 8763mm/3425mils												
SMD150F	2.30	2.04	1.80	1.50	1.45	1.23	1.10	0.99	0.83	0.70	0.63	—
SMD150F/33	2.30	2.04	1.80	1.50	1.45	1.23	1.10	0.99	0.83	0.70	0.63	—
SMDH160	2.14	1.96	1.78	1.60	1.56	1.42	1.33	1.24	1.15	1.06	1.02	0.44
SMD185F	2.54	2.29	2.20	1.85	1.80	1.55	1.43	1.31	1.19	1.06	1.00	—
SMD200F	3.01	2.67	2.30	2.00	1.90	1.66	1.50	1.30	1.16	0.99	0.91	—
SMD250F	3.72	3.31	2.80	2.50	2.35	2.09	1.89	1.60	1.48	1.28	1.18	—

Figure S1 Thermal Derating Curve for PolySwitch Surface-Mount Devices

A = femtoSMD / picoSMD / nanoSMD / microSMD / miniSMD / decaSMD and SMD

B = SMDH120 and SMDH160

Figure S1

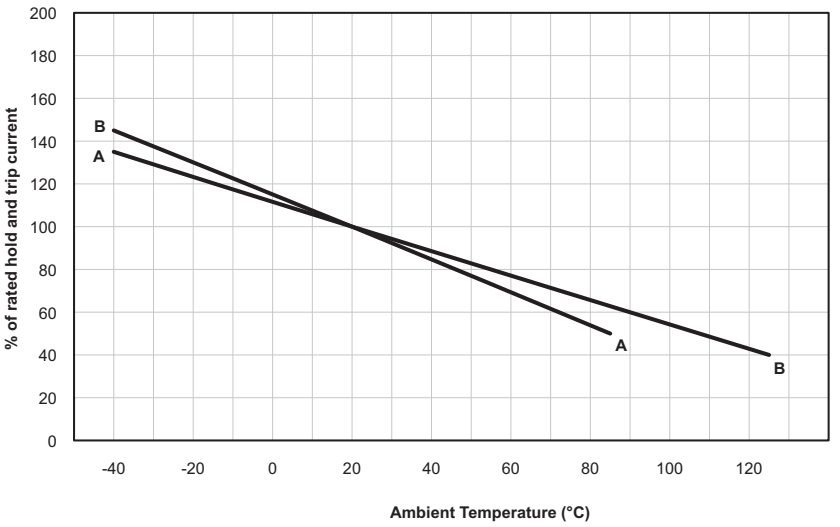

Table S3 Electrical Characteristics for PolySwitch Surface-Mount Devices at Room Temperature

Part Number	I_H (A)	I_T (A)	V_{MAX} (V_{DC})	I_{MAX} (A)	$P_{D\ MAX}$ (W)	Max Time-to-Trip (A)	Max Time-to-Trip (S)	R_{MIN} (Ω)	R_{1MAX} (Ω)	Figure for Dimensions
femtoSMDC Series Size 1608mm/0603mils										
femtoSMDC005F	0.05	0.15	15	40	0.50	0.50	0.10	3.80	30.00	S2
femtoSMDC008F	0.08	0.20	12	40	0.50	0.60	0.10	2.80	14.00	S2
femtoSMDC010F	0.10	0.25	12	40	0.50	0.70	0.10	1.70	8.00	S2
femtoSMDC012F	0.12	0.30	9	40	0.50	0.80	0.10	1.10	5.80	S2
femtoSMDC016F	0.16	0.40	9	40	0.50	1.00	0.10	1.00	4.20	S2
femtoSMDC020F	0.20	0.45	9	40	0.50	2.00	0.10	0.70	3.00	S2
femtoSMDC035F	0.35	0.70	6	40	0.50	3.50	0.10	0.20	1.40	S2
picoSMDC Series Size 2012mm/0805mils										
picoSMDC010S	0.10	0.30	15	100	0.50	0.50	0.60	1.50	11.00	S2
picoSMDC012S	0.12	0.30	15	100	0.50	1.00	0.10	1.50	9.00	S2
picoSMDC020S	0.20	0.47	9	100	0.50	2.00	0.10	0.75	3.20	S2
picoSMDC035S	0.35	0.75	6	100	0.50	1.75	0.20	0.35	1.40	S2
picoSMDC050S	0.50	1.00	6	100	0.50	8.00	0.10	0.15	0.80	S2
NEW picoSMDC075S	0.75	1.50	6	40	0.70	8.00	0.20	0.10	0.35	S2
NEW picoSMDC110S	1.10	2.20	6	40	0.80	8.00	0.20	0.05	0.17	S2
nanoSMDC Series Size 3216mm/1206mils										
nanoSMDC012F	0.12	0.39	48	10	0.50	1.00	0.20	1.40	6.50	S2
nanoSMDC016F	0.16	0.45	48	10	0.50	1.00	0.30	1.10	5.00	S2
nanoSMDC020F	0.20	0.42	24	100	0.60	8.00	0.10	0.65	3.10	S2
nanoSMDC025F	0.25	0.58	16	100	0.60	8.00	0.01	0.55	2.30	S2
nanoSMDC035F	0.35	0.75	16	20	0.60	3.50	0.10	0.45	1.35	S2
nanoSMDC050F/13.2	0.50	1.10	13.2	100	0.80	8.00	0.10	0.20	0.75	S2
nanoSMDC075F	0.75	1.50	6	100	0.80	8.00	0.10	0.09	0.30	S2
nanoSMDC110F	1.10	2.20	6	100	0.80	8.00	0.10	0.07	0.20	S2
nanoSMDC150F	1.50	3.00	6	100	0.80	8.00	0.30	0.04	0.11	S2
nanoSMDC200F	2.00	4.00	6	100	1.00	8.00	1.50	0.02	0.072	S2

RoHS Compliant, ELV Compliant HF Halogen Free

Table S3 Electrical Characteristics for PolySwitch Surface-Mount Devices at Room Temperature Cont'd

Part Number	I_H (A)	I_T (A)	V_{MAX} (V_{DC})	I_{MAX} (A)	$P_{D\ MAX}$ (W)	Max Time-to-Trip (A)	Max Time-to-Trip (S)	R_{MIN} (Ω)	R_{1MAX} (Ω)	Figure for Dimensions
microSMD Series Size 3225mm/1210mils										
microSMD005F	0.05	0.15	30	10	1.00	0.25	1.50	3.60	50.00	S2
microSMD010F	0.10	0.25	30	10	0.80	0.50	1.00	2.10	15.00	S2
microSMD035F	0.35	0.75	6	40	0.80	8.00	0.20	0.32	1.30	S2
microSMD050F	0.50	1.00	13.2	40	0.80	8.00	0.05	0.25	0.90	S2
microSMD075F	0.75	1.50	6	40	0.80	8.00	0.10	0.11	0.40	S2
microSMD110F	1.10	2.20	6	40	0.80	8.00	0.20	0.07	0.21	S2
microSMD150F	1.50	3.00	6	40	0.80	8.00	1.00	0.04	0.11	S2
microSMD175F	1.75	3.50	6	40	0.80	8.00	0.80	0.025	0.08	S2
microSMD200F	2.00	4.00	6	100	0.80	8.00	2.50	0.020	0.06	S2
miniSMDC Series Size 4532mm/1812mils										
miniSMDC010F	0.10	0.30	60	40	0.75	0.50	5.00	0.70	12.70	S2
miniSMDC014F	0.14	0.28	60	10	0.75	8.00	0.008	1.50	6.00	S2
miniSMDC020F	0.20	0.40	30	10	0.80	8.00	0.02	0.60	3.30	S2
miniSMDC030F	0.30	0.60	30	40	0.80	8.00	0.10	0.20	1.75	S2
miniSMDC050F	0.50	1.00	24	100	0.80	8.00	0.15	0.15	1.00	S2
miniSMDC075F	0.75	1.50	13.2	100	1.00	8.00	0.20	0.11	0.45	S2
miniSMDC075F/24	0.75	1.50	24	40	0.80	8.00	0.30	0.09	0.29	S2
NEW miniSMDC075F/33	0.75	1.60	33	100	1.00	8.00	1.00	0.11	0.39	S2
miniSMDC100F	1.10	2.20	8	100	1.20	8.00	0.30	0.04	0.21	S2
miniSMDC110F	1.10	2.20	8	100	1.20	8.00	0.30	0.04	0.21	S2
miniSMDC110F/16	1.10	2.20	16	100	0.80	8.00	0.30	0.06	0.18	S2
miniSMDC110F/24	1.10	2.20	24	20	0.80	8.00	0.50	0.06	0.18	S2
miniSMDC125F	1.25	2.50	6	100	0.80	8.00	0.40	0.05	0.14	S2
miniSMDC125F/16	1.25	2.50	16	100	0.80	8.00	0.40	0.05	0.14	S2
miniSMDC150F	1.50	3.00	6	100	0.80	8.00	0.50	0.04	0.11	S2
miniSMDC150F/12	1.50	2.80	12	100	0.80	8.00	0.50	0.04	0.11	S2
miniSMDC150F/16	1.50	2.80	16	100	0.80	8.00	0.50	0.04	0.11	S2
miniSMDC150F/24	1.50	3.00	24	20	1.00	8.00	1.50	0.04	0.12	S2
miniSMDC160F	1.60	3.20	9	100	0.80	8.00	1.00	0.03	0.10	S2
miniSMDC200F	2.00	4.00	8	100	1.00	8.00	5.00	0.020	0.070	S2
NEW miniSMDC200F/16	2.00	4.00	16	40	1.20	8.00	5.00	0.020	0.085	S2
miniSMDC260F	2.60	5.00	6	100	1.00	8.00	5.00	0.015	0.043	S2
miniSMDC260F/12	2.60	5.00	12	100	1.00	8.00	5.00	0.015	0.047	S2
miniSMDC260F/13.2	2.60	5.00	13.2	100	1.20	8.00	5.00	0.015	0.050	S2
miniSMDC260F/16	2.60	5.00	16	100	1.20	8.00	5.00	0.015	0.050	S2
miniSMDC300F	3.00	6.00	6	100	1.00	8.00	5.00	0.011	0.036	S2
midSMD Series Size 5050mm/2018mils										
SMD030F-2018	0.30	0.80	60	20	1.50	1.50	1.50	0.500	2.30	S3
decaSMDC050F/60	0.55	1.10	60	10	1.00	8.00	0.10	0.200	1.10	S2
SMD100F-2018	1.10	2.20	15	40	1.40	8.00	0.50	0.100	0.40	S3
SMD150F-2018	1.50	3.00	15	40	1.80	8.00	1.00	0.070	0.18	S3
SMD200F-2018	2.00	4.20	6	40	1.50	8.00	3.00	0.048	0.10	S3

Table S3 Electrical Characteristics for PolySwitch Surface-Mount Devices at Room Temperature

Cont'd

Part Number	I_H (A)	I_T (A)	V_{MAX} (V_{DC})	I_{MAX} (A)	$P_{D\ MAX}$ (W)	Max Time-to-Trip (A)	Max Time-to-Trip (S)	R_{MIN} (Ω)	R_{1MAX} (Ω)	Figure for Dimensions
SMD Series Size 7555mm/2920mils										
SMD030F	0.30	0.60	60	10	1.70	1.50	3.00	1.200	4.800	S4
SMD050F	0.50	1.00	60	10	1.70	2.50	4.00	0.350	1.400	S4
SMD075F	0.75	1.50	30	40	1.70	8.00	0.30	0.350	1.000	S4
SMD075F/60	0.75	1.50	60	10	1.70	8.00	0.30	0.350	1.000	S4
SMD100F	1.10	2.20	30	40	1.70	8.00	0.50	0.120	0.480	S4
SMD100F/33	1.10	2.20	33	40	1.70	8.00	0.50	0.120	0.410	S4
SMDH120	1.20	2.30	16	50	2.00	8.00	2.00	0.150	0.340	S4
SMD125F	1.25	2.50	15	40	1.70	8.00	2.00	0.070	0.250	S4
NEW SMD150F/33-2920	1.50	3.00	33	40	1.50	8.00	5.00	0.080	0.230	S4
NEW SMD200F/24-2920	2.00	4.00	24	40	1.50	8.00	5.00	0.050	0.125	S4
NEW SMD250F/15-2920	2.50	5.00	15	40	1.50	8.00	10.00	0.035	0.085	S4
SMD260F	2.60	5.20	6	40	1.70	8.00	20.00	0.025	0.075	S4
SMD300F	3.00	6.00	6	40	1.50	8.00	35.00	0.015	0.048	S4
SMD300F/15	3.00	6.00	15	40	1.50	8.00	35.00	0.015	0.050	S4
SMD2 Devices Size 8763mm/3425mils										
SMD150F	1.50	3.00	15	40	1.90	8.00	5.00	0.060	0.250	S4
SMD150F/33	1.50	3.00	33	40	1.90	8.00	5.00	0.080	0.230	S4
SMDH160	1.60	3.20	16	70	2.20	8.00	15.00	0.050	0.150	S4
SMD185F	1.85	3.60	33	40	1.50	8.00	5.00	0.065	0.165	S4
SMD200F	2.00	4.00	15	40	1.90	8.00	12.00	0.050	0.125	S4
SMD250F	2.50	5.00	15	40	1.90	8.00	25.00	0.035	0.085	S4

Figures S2-S4 Dimension Figures for Surface-Mount Devices

Figure S2

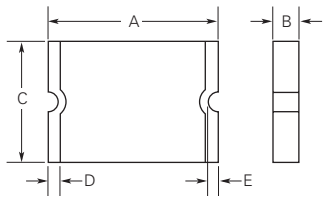

Figure S3

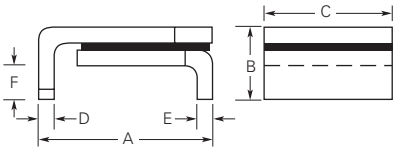

Figure S4

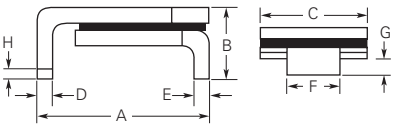

Table S4 Dimensions for PolySwitch Surface-Mount Devices in Millimeters (Inches)

Part Number	A Min	A Max	B Min	B Max	C Min	C Max	D Min	D Max	E Min	E Max	F Min	F Max	G Min	G Max	H Min	Figure
femtoSMDC Series Size 1608mm/0603mils																
femtoSMDC005F	1.40	1.80	0.45	0.85	0.60	1.00	0.10	0.50	0.075	—	—	—	—	—	—	S2
	(0.055)	(0.071)	(0.017)	(0.033)	(0.023)	(0.039)	(0.004)	(0.020)	(0.003)	—	—	—	—	—	—	
femtoSMDC008F	1.40	1.80	0.45	0.85	0.60	1.00	0.10	0.50	0.075	—	—	—	—	—	—	S2
	(0.055)	(0.071)	(0.017)	(0.033)	(0.023)	(0.039)	(0.004)	(0.020)	(0.003)	—	—	—	—	—	—	
femtoSMDC010F	1.40	1.80	0.45	0.85	0.60	1.00	0.10	0.50	0.075	—	—	—	—	—	—	S2
	(0.055)	(0.071)	(0.017)	(0.033)	(0.023)	(0.039)	(0.004)	(0.020)	(0.003)	—	—	—	—	—	—	
femtoSMDC012F	1.40	1.80	0.35	0.75	0.60	1.00	0.10	0.50	0.075	—	—	—	—	—	—	S2
	(0.055)	(0.071)	(0.013)	(0.030)	(0.023)	(0.039)	(0.004)	(0.020)	(0.003)	—	—	—	—	—	—	
femtoSMDC016F	1.40	1.80	0.35	0.75	0.60	1.00	0.10	0.50	0.075	—	—	—	—	—	—	S2
	(0.055)	(0.071)	(0.013)	(0.030)	(0.023)	(0.039)	(0.004)	(0.020)	(0.003)	—	—	—	—	—	—	
femtoSMDC020F	1.40	1.80	0.35	0.75	0.60	1.00	0.10	0.50	0.075	—	—	—	—	—	—	S2
	(0.055)	(0.071)	(0.013)	(0.030)	(0.023)	(0.039)	(0.004)	(0.020)	(0.003)	—	—	—	—	—	—	
femtoSMDC035F	1.40	1.80	0.40	0.65	0.60	1.00	0.10	0.50	0.075	—	—	—	—	—	—	S2
	(0.055)	(0.071)	(0.016)	(0.026)	(0.023)	(0.039)	(0.004)	(0.020)	(0.003)	—	—	—	—	—	—	

RoHS Compliant, ELV Compliant HF Halogen Free

Table S4 Dimensions for PolySwitch Surface-Mount Devices in Millimeters (Inches) Cont'd

Part Number	A Min	A Max	B Min	B Max	C Min	C Max	D Min	D Max	E Min	E Max	F Min	F Max	G Min	G Max	H Min	Figure
picoSMDC Series Size 2012mm/0805mils																
picoSMDC010S	2.00	2.20	0.60	1.00	1.30	1.50	0.25	0.75	0.076	—	—	—	—	—	—	S2
	(0.079)	(0.087)	(0.023)	(0.040)	(0.051)	(0.059)	(0.010)	(0.030)	(0.003)	—	—	—	—	—	—	
picoSMDC012S	2.00	2.20	0.44	0.68	1.30	1.50	0.25	0.75	0.076	—	—	—	—	—	—	S2
	(0.079)	(0.087)	(0.017)	(0.027)	(0.051)	(0.059)	(0.010)	(0.030)	(0.003)	—	—	—	—	—	—	
picoSMDC020S	2.00	2.20	0.44	0.68	1.30	1.50	0.25	0.75	0.076	—	—	—	—	—	—	S2
	(0.079)	(0.087)	(0.017)	(0.027)	(0.051)	(0.059)	(0.010)	(0.030)	(0.003)	—	—	—	—	—	—	
picoSMDC035S	2.00	2.20	0.44	0.68	1.30	1.50	0.25	0.75	0.076	—	—	—	—	—	—	S2
	(0.079)	(0.087)	(0.017)	(0.027)	(0.051)	(0.059)	(0.010)	(0.030)	(0.003)	—	—	—	—	—	—	
picoSMDC050S	2.00	2.20	0.63	0.93	1.30	1.50	0.25	0.75	0.076	—	—	—	—	—	—	S2
	(0.079)	(0.087)	(0.025)	(0.036)	(0.051)	(0.059)	(0.010)	(0.030)	(0.003)	—	—	—	—	—	—	
NEW picoSMDC075S	2.00	2.20	0.63	0.93	1.30	1.50	0.25	0.75	0.076	—	—	—	—	—	—	S2
	(0.079)	(0.087)	(0.025)	(0.036)	(0.051)	(0.059)	(0.010)	(0.030)	(0.003)	—	—	—	—	—	—	
NEW picoSMDC110S	2.00	2.20	0.80	1.20	1.30	1.50	0.25	0.75	0.076	—	—	—	—	—	—	S2
	(0.079)	(0.087)	(0.031)	(0.047)	(0.051)	(0.059)	(0.010)	(0.030)	(0.003)	—	—	—	—	—	—	
nanoSMDC Series Size 3216mm/1206mils																
nanoSMDC012F	3.00	3.40	0.62	1.00	1.37	1.80	0.25	0.75	0.076	—	—	—	—	—	—	S2
	(0.118)	(0.134)	(0.024)	(0.039)	(0.054)	(0.071)	(0.010)	(0.030)	(0.003)	—	—	—	—	—	—	
nanoSMDC016F	3.00	3.40	0.62	1.00	1.37	1.80	0.25	0.75	0.076	—	—	—	—	—	—	S2
	(0.118)	(0.134)	(0.024)	(0.039)	(0.054)	(0.071)	(0.010)	(0.030)	(0.003)	—	—	—	—	—	—	
nanoSMDC020F	3.00	3.40	0.58	0.82	1.37	1.80	0.25	0.75	0.076	—	—	—	—	—	—	S2
	(0.118)	(0.134)	(0.023)	(0.032)	(0.054)	(0.071)	(0.010)	(0.030)	(0.003)	—	—	—	—	—	—	
nanoSMDC025F	3.00	3.40	0.58	0.82	1.37	1.80	0.25	0.75	0.076	—	—	—	—	—	—	S2
	(0.118)	(0.134)	(0.023)	(0.032)	(0.054)	(0.071)	(0.010)	(0.030)	(0.003)	—	—	—	—	—	—	
nanoSMDC035F	3.00	3.40	0.58	0.82	1.37	1.80	0.25	0.75	0.076	—	—	—	—	—	—	S2
	(0.118)	(0.134)	(0.023)	(0.032)	(0.054)	(0.071)	(0.010)	(0.030)	(0.003)	—	—	—	—	—	—	
nanoSMDC050F/13.2	3.00	3.40	0.50	0.74	1.37	1.80	0.25	0.75	0.076	—	—	—	—	—	—	S2
	(0.118)	(0.134)	(0.019)	(0.029)	(0.054)	(0.071)	(0.010)	(0.030)	(0.003)	—	—	—	—	—	—	
nanoSMDC075F	3.00	3.40	0.44	0.68	1.37	1.80	0.25	0.75	0.076	—	—	—	—	—	—	S2
	(0.118)	(0.134)	(0.017)	(0.027)	(0.054)	(0.071)	(0.010)	(0.030)	(0.003)	—	—	—	—	—	—	
nanoSMDC110F	3.00	3.40	0.28	0.67	1.37	1.80	0.25	0.75	0.076	—	—	—	—	—	—	S2
	(0.118)	(0.134)	(0.011)	(0.026)	(0.054)	(0.071)	(0.010)	(0.030)	(0.003)	—	—	—	—	—	—	
nanoSMDC150F	3.00	3.40	0.55	0.89	1.37	1.80	0.25	0.75	0.076	—	—	—	—	—	—	S2
	(0.118)	(0.134)	(0.022)	(0.035)	(0.054)	(0.071)	(0.010)	(0.030)	(0.003)	—	—	—	—	—	—	
nanoSMDC200F	3.00	3.40	0.83	1.10	1.37	1.80	0.25	0.75	0.076	—	—	—	—	—	—	S2
	(0.118)	(0.134)	(0.033)	(0.043)	(0.054)	(0.071)	(0.010)	(0.030)	(0.003)	—	—	—	—	—	—	
microSMD Series Size 3225mm/1210mils																
microSMD005F	3.0	3.43	0.50	0.85	2.35	2.80	0.25	0.75	0.076	—	—	—	—	—	—	S2
	(0.118)	(0.135)	(0.019)	(0.034)	(0.092)	(0.110)	(0.010)	(0.030)	(0.003)	—	—	—	—	—	—	
microSMD010F	3.0	3.43	0.50	0.85	2.35	2.80	0.25	0.75	0.076	—	—	—	—	—	—	S2
	(0.118)	(0.135)	(0.019)	(0.034)	(0.092)	(0.110)	(0.010)	(0.030)	(0.003)	—	—	—	—	—	—	
microSMD035F	3.0	3.43	0.38	0.62	2.35	2.80	0.25	0.75	0.076	—	—	—	—	—	—	S2
	(0.118)	(0.135)	(0.015)	(0.025)	(0.092)	(0.110)	(0.010)	(0.030)	(0.003)	—	—	—	—	—	—	
microSMD050F	3.0	3.43	0.38	0.62	2.35	2.80	0.25	0.75	0.076	—	—	—	—	—	—	S2
	(0.118)	(0.135)	(0.015)	(0.025)	(0.092)	(0.110)	(0.010)	(0.030)	(0.003)	—	—	—	—	—	—	
microSMD075F	3.0	3.43	0.38	0.62	2.35	2.80	0.25	0.75	0.076	—	—	—	—	—	—	S2
	(0.118)	(0.135)	(0.015)	(0.025)	(0.092)	(0.110)	(0.010)	(0.030)	(0.003)	—	—	—	—	—	—	
microSMD110F	3.0	3.43	0.28	0.48	2.35	2.80	0.25	0.75	0.076	—	—	—	—	—	—	S2
	(0.118)	(0.135)	(0.011)	(0.019)	(0.092)	(0.110)	(0.010)	(0.030)	(0.003)	—	—	—	—	—	—	
microSMD150F	3.0	3.43	0.51	1.22	2.35	2.80	0.25	0.75	0.076	—	—	—	—	—	—	S2
	(0.118)	(0.135)	(0.020)	(0.048)	(0.092)	(0.110)	(0.010)	(0.030)	(0.003)	—	—	—	—	—	—	
microSMD175F	3.0	3.43	0.40	0.76	2.35	2.80	0.25	0.75	0.076	—	—	—	—	—	—	S2
	(0.118)	(0.135)	(0.016)	(0.030)	(0.092)	(0.110)	(0.010)	(0.030)	(0.003)	—	—	—	—	—	—	
microSMD200F	3.0	3.43	0.79	1.17	2.35	2.80	0.25	0.75	0.076	—	—	—	—	—	—	S2
	(0.118)	(0.135)	(0.031)	(0.046)	(0.092)	(0.110)	(0.010)	(0.030)	(0.003)	—	—	—	—	—	—	

RoHS Compliant, ELV Compliant HF Halogen Free

Table S4 Dimensions for PolySwitch Surface-mount Devices in Millimeters (Inches) Cont'd

Part Number	A Min	A Max	B Min	B Max	C Min	C Max	D Min	D Max	E Min	E Max	F Min	F Max	G Min	G Max	H Min	Figure
miniSMDC Series Size 4532mm/1812mils																
miniSMDC010F	4.37	4.73	0.635	0.89	3.07	3.41	0.25	0.95	0.20	—	—	—	—	—	—	S2
	(0.172)	(0.186)	(0.025)	(0.035)	(0.121)	(0.134)	(0.010)	(0.040)	(0.008)	—	—	—	—	—	—	
miniSMDC014F	4.37	4.73	0.635	0.89	3.07	3.41	0.25	0.95	0.20	—	—	—	—	—	—	S2
	(0.172)	(0.186)	(0.025)	(0.035)	(0.121)	(0.134)	(0.010)	(0.040)	(0.008)	—	—	—	—	—	—	
miniSMDC020F	4.37	4.73	0.635	0.89	3.07	3.41	0.25	0.95	0.20	—	—	—	—	—	—	S2
	(0.172)	(0.186)	(0.025)	(0.035)	(0.121)	(0.134)	(0.010)	(0.040)	(0.008)	—	—	—	—	—	—	
miniSMDC030F	4.37	4.73	0.635	0.89	3.07	3.41	0.25	0.95	0.20	—	—	—	—	—	—	S2
	(0.172)	(0.186)	(0.025)	(0.035)	(0.121)	(0.134)	(0.010)	(0.040)	(0.008)	—	—	—	—	—	—	
miniSMDC050F	4.37	4.73	0.38	0.62	3.07	3.41	0.25	0.95	0.20	—	—	—	—	—	—	S2
	(0.172)	(0.186)	(0.015)	(0.025)	(0.121)	(0.134)	(0.010)	(0.040)	(0.008)	—	—	—	—	—	—	
miniSMDC075F	4.37	4.73	0.38	0.62	3.07	3.41	0.25	0.95	0.20	—	—	—	—	—	—	S2
	(0.172)	(0.186)	(0.015)	(0.025)	(0.121)	(0.134)	(0.010)	(0.040)	(0.008)	—	—	—	—	—	—	
miniSMDC075F/24	4.37	4.83	0.81	1.46	3.07	3.41	0.25	0.95	0.20	—	—	—	—	—	—	S2
	(0.172)	(0.190)	(0.032)	(0.057)	(0.121)	(0.134)	(0.010)	(0.040)	(0.008)	—	—	—	—	—	—	
NEW miniSMDC075F/33	4.37	4.83	0.94	1.46	3.07	3.41	0.25	0.95	0.20	—	—	—	—	—	—	S2
	(0.172)	(0.190)	(0.037)	(0.057)	(0.121)	(0.134)	(0.010)	(0.040)	(0.008)	—	—	—	—	—	—	
miniSMDC100F	4.37	4.73	0.38	0.62	3.07	3.41	0.25	0.95	0.20	—	—	—	—	—	—	S2
	(0.172)	(0.186)	(0.015)	(0.025)	(0.121)	(0.134)	(0.010)	(0.040)	(0.008)	—	—	—	—	—	—	
miniSMDC110F	4.37	4.73	0.38	0.62	3.07	3.41	0.25	0.95	0.20	—	—	—	—	—	—	S2
	(0.172)	(0.186)	(0.015)	(0.025)	(0.121)	(0.134)	(0.010)	(0.040)	(0.008)	—	—	—	—	—	—	
miniSMDC110F/16	4.37	4.83	0.28	0.48	3.07	3.41	0.25	0.95	0.20	—	—	—	—	—	—	S2
	(0.172)	(0.190)	(0.011)	(0.019)	(0.121)	(0.134)	(0.010)	(0.040)	(0.008)	—	—	—	—	—	—	
miniSMDC110F/24	4.37	4.83	0.81	1.46	3.07	3.41	0.25	0.95	0.20	—	—	—	—	—	—	S2
	(0.172)	(0.190)	(0.032)	(0.057)	(0.121)	(0.134)	(0.010)	(0.040)	(0.008)	—	—	—	—	—	—	
miniSMDC125F	4.37	4.73	0.28	0.48	3.07	3.41	0.25	0.95	0.20	—	—	—	—	—	—	S2
	(0.172)	(0.186)	(0.011)	(0.019)	(0.121)	(0.134)	(0.010)	(0.040)	(0.008)	—	—	—	—	—	—	
miniSMDC125F/16	4.37	4.83	0.28	0.48	3.07	3.41	0.25	0.95	0.20	—	—	—	—	—	—	S2
	(0.172)	(0.190)	(0.011)	(0.019)	(0.121)	(0.134)	(0.010)	(0.040)	(0.008)	—	—	—	—	—	—	
miniSMDC150F	4.37	4.73	0.28	0.48	3.07	3.41	0.25	0.95	0.20	—	—	—	—	—	—	S2
	(0.172)	(0.186)	(0.011)	(0.019)	(0.121)	(0.134)	(0.010)	(0.040)	(0.008)	—	—	—	—	—	—	
miniSMDC150F/12	4.37	4.83	0.28	0.48	3.07	3.41	0.25	0.95	0.20	—	—	—	—	—	—	S2
	(0.172)	(0.190)	(0.011)	(0.019)	(0.121)	(0.134)	(0.010)	(0.040)	(0.008)	—	—	—	—	—	—	
miniSMDC150F/16	4.37	4.83	0.28	0.48	3.07	3.41	0.25	0.95	0.20	—	—	—	—	—	—	S2
	(0.172)	(0.190)	(0.011)	(0.019)	(0.121)	(0.134)	(0.010)	(0.040)	(0.008)	—	—	—	—	—	—	
miniSMDC150F/24	4.37	4.83	1.00	1.94	3.07	3.41	0.25	0.95	0.20	—	—	—	—	—	—	S2
	(0.172)	(0.190)	(0.040)	(0.077)	(0.121)	(0.134)	(0.010)	(0.040)	(0.008)	—	—	—	—	—	—	
miniSMDC160F	4.37	4.73	0.28	0.48	3.07	3.41	0.25	0.95	0.20	—	—	—	—	—	—	S2
	(0.172)	(0.186)	(0.011)	(0.019)	(0.121)	(0.134)	(0.010)	(0.040)	(0.008)	—	—	—	—	—	—	
miniSMDC200F	4.37	4.73	0.51	1.22	3.07	3.41	0.25	0.95	0.20	—	—	—	—	—	—	S2
	(0.172)	(0.186)	(0.020)	(0.048)	(0.121)	(0.134)	(0.010)	(0.040)	(0.008)	—	—	—	—	—	—	
NEW miniSMDC200F/16	4.37	4.73	0.51	1.22	3.07	3.41	0.25	0.95	0.20	—	—	—	—	—	—	S2
	(0.172)	(0.186)	(0.020)	(0.048)	(0.121)	(0.134)	(0.010)	(0.040)	(0.008)	—	—	—	—	—	—	
miniSMDC260F	4.37	4.73	0.48	0.78	3.07	3.41	0.25	0.95	0.20	—	—	—	—	—	—	S2
	(0.172)	(0.186)	(0.019)	(0.031)	(0.121)	(0.134)	(0.010)	(0.040)	(0.008)	—	—	—	—	—	—	
miniSMDC260F/12	4.37	4.83	1.02	1.52	3.07	3.41	0.25	0.95	0.20	—	—	—	—	—	—	S2
	(0.172)	(0.190)	(0.042)	(0.060)	(0.121)	(0.134)	(0.010)	(0.040)	(0.008)	—	—	—	—	—	—	
miniSMDC260F/13.2	4.37	4.83	1.02	1.52	3.07	3.41	0.25	0.95	0.20	—	—	—	—	—	—	S2
	(0.172)	(0.190)	(0.042)	(0.060)	(0.121)	(0.134)	(0.010)	(0.040)	(0.008)	—	—	—	—	—	—	
miniSMDC260F/16	4.37	4.83	1.02	1.52	3.07	3.41	0.25	0.95	0.20	—	—	—	—	—	—	S2
	(0.172)	(0.190)	(0.042)	(0.060)	(0.121)	(0.134)	(0.010)	(0.040)	(0.008)	—	—	—	—	—	—	
miniSMDC300F	4.37	4.73	0.45	0.76	3.07	3.41	0.25	0.95	0.20	—	—	—	—	—	—	S2
	(0.172)	(0.186)	(0.018)	(0.030)	(0.121)	(0.134)	(0.010)	(0.040)	(0.008)	—	—	—	—	—	—	

Table S4 Dimensions for PolySwitch Surface-Mount Devices in Millimeters (Inches) Cont'd

Part Number	A Min	A Max	B Min	B Max	C Min	C Max	D Min	D Max	E Min	E Max	F Min	F Max	G Min	G Max	H Min	Figure
midSMD Series Size 5050mm/2018mils																
SMD030F-2018	4.72	5.44	—	1.78	4.22	4.93	0.25	0.36	0.25	0.36	0.30	0.46	—	—	—	S3
	(0.186)	(0.214)	—	(0.070)	(0.166)	(0.194)	(0.010)	(0.014)	(0.010)	(0.014)	(0.012)	(0.018)	—	—	—	
decaSMDC050F/60	4.70	5.31	0.63	0.89	4.19	4.81	0.25	0.95	0.25	—	—	—	—	—	—	S2
	(0.185)	(0.209)	(0.025)	(0.035)	(0.165)	(0.189)	(0.010)	(0.040)	(0.010)	—	—	—	—	—	—	
SMD100F-2018	4.72	5.44	—	1.52	4.22	4.93	0.25	0.36	0.25	0.36	0.30	0.46	—	—	—	S3
	(0.186)	(0.214)	—	(0.060)	(0.166)	(0.194)	(0.010)	(0.014)	(0.010)	(0.014)	(0.012)	(0.018)	—	—	—	
SMD150F-2018	4.72	5.44	—	1.52	4.22	4.93	0.25	0.36	0.25	0.36	0.30	0.46	—	—	—	S3
	(0.186)	(0.214)	—	(0.060)	(0.166)	(0.194)	(0.010)	(0.014)	(0.010)	(0.014)	(0.012)	(0.018)	—	—	—	
SMD200F-2018	4.72	5.44	—	1.52	4.22	4.93	0.25	0.36	0.25	0.36	0.30	0.46	—	—	—	S3
	(0.186)	(0.214)	—	(0.060)	(0.166)	(0.194)	(0.010)	(0.014)	(0.010)	(0.014)	(0.012)	(0.018)	—	—	—	
SMD Series Size 7555mm/2920mils																
SMD030F	6.73	7.98	—	3.18	4.80	5.44	0.56	0.71	0.56	0.71	2.16	2.41	0.66	1.37	0.43	S4
	(0.265)	(0.314)	—	(0.125)	(0.19)	(0.214)	(0.022)	(0.028)	(0.022)	(0.028)	(0.085)	(0.095)	(0.026)	(0.054)	(0.017)	
SMD050F	6.73	7.98	—	3.18	4.80	5.44	0.56	0.71	0.56	0.71	2.16	2.41	0.66	1.37	0.43	S4
	(0.265)	(0.314)	—	(0.125)	(0.19)	(0.214)	(0.022)	(0.028)	(0.022)	(0.028)	(0.085)	(0.095)	(0.026)	(0.054)	(0.017)	
SMD075F	6.73	7.98	—	3.18	4.80	5.44	0.56	0.71	0.56	0.71	2.16	2.41	0.66	1.37	0.43	S4
	(0.265)	(0.314)	—	(0.125)	(0.19)	(0.214)	(0.022)	(0.028)	(0.022)	(0.028)	(0.085)	(0.095)	(0.026)	(0.054)	(0.017)	
SMD075F/60	6.73	7.98	—	3.18	4.80	5.44	0.56	0.71	0.56	0.71	2.16	2.41	0.66	1.37	0.43	S4
	(0.265)	(0.314)	—	(0.125)	(0.19)	(0.214)	(0.022)	(0.028)	(0.022)	(0.028)	(0.085)	(0.095)	(0.026)	(0.054)	(0.017)	
SMD100F	6.73	7.98	—	3.00	4.80	5.44	0.56	0.71	0.56	0.71	2.16	2.41	0.66	1.37	0.43	S4
	(0.265)	(0.314)	—	(0.118)	(0.19)	(0.214)	(0.022)	(0.028)	(0.022)	(0.028)	(0.085)	(0.095)	(0.026)	(0.054)	(0.017)	
SMD100F/33	6.73	7.98	—	3.00	4.80	5.44	0.56	0.71	0.56	0.71	2.16	2.41	0.66	1.37	0.43	S4
	(0.265)	(0.314)	—	(0.118)	(0.19)	(0.214)	(0.022)	(0.028)	(0.022)	(0.028)	(0.085)	(0.095)	(0.026)	(0.054)	(0.017)	
SMDH120	6.73	7.98	—	3.00	4.80	5.44	0.56	0.71	0.56	0.71	2.16	2.41	0.66	1.37	0.43	S4
	(0.265)	(0.314)	—	(0.118)	(0.19)	(0.214)	(0.022)	(0.028)	(0.022)	(0.028)	(0.085)	(0.095)	(0.026)	(0.054)	(0.017)	
SMD125F	6.73	7.98	—	3.00	4.80	5.44	0.56	0.71	0.56	0.71	2.16	2.41	0.66	1.37	0.43	S4
	(0.265)	(0.314)	—	(0.118)	(0.19)	(0.214)	(0.022)	(0.028)	(0.022)	(0.028)	(0.085)	(0.095)	(0.026)	(0.054)	(0.017)	
NEW SMD150F/33-2920	6.73	7.98	—	3.00	4.80	5.44	0.56	0.71	0.56	0.71	2.16	2.41	0.66	1.37	0.43	S4
	(0.265)	(0.314)	—	(0.118)	(0.19)	(0.214)	(0.022)	(0.028)	(0.022)	(0.028)	(0.085)	(0.095)	(0.026)	(0.054)	(0.017)	
NEW SMD200F/24-2920	6.73	7.98	—	3.00	4.80	5.44	0.56	0.71	0.56	0.71	2.16	2.41	0.66	1.37	0.43	S4
	(0.265)	(0.314)	—	(0.118)	(0.19)	(0.214)	(0.022)	(0.028)	(0.022)	(0.028)	(0.085)	(0.095)	(0.026)	(0.054)	(0.017)	
NEW SMD250F/15-2920	6.73	7.98	—	3.00	4.80	5.44	0.56	0.71	0.56	0.71	2.16	2.41	0.66	1.37	0.43	S4
	(0.265)	(0.314)	—	(0.118)	(0.19)	(0.214)	(0.022)	(0.028)	(0.022)	(0.028)	(0.085)	(0.095)	(0.026)	(0.054)	(0.017)	
SMD260F	6.73	7.98	—	3.00	4.80	5.44	0.56	0.71	0.56	0.71	2.16	2.41	0.66	1.37	0.43	S4
	(0.265)	(0.314)	—	(0.118)	(0.19)	(0.214)	(0.022)	(0.028)	(0.022)	(0.028)	(0.085)	(0.095)	(0.026)	(0.054)	(0.017)	
SMD300F	6.73	7.98	—	3.00	4.80	5.44	0.56	0.71	0.56	0.71	2.16	2.41	0.66	1.37	0.43	S4
	(0.265)	(0.314)	—	(0.118)	(0.19)	(0.214)	(0.022)	(0.028)	(0.022)	(0.028)	(0.085)	(0.095)	(0.026)	(0.054)	(0.017)	
SMD300F/15	6.73	7.98	—	3.00	4.80	5.44	0.56	0.71	0.56	0.71	2.16	2.41	0.66	1.37	0.43	S4
	(0.265)	(0.314)	—	(0.118)	(0.19)	(0.214)	(0.022)	(0.028)	(0.022)	(0.028)	(0.085)	(0.095)	(0.026)	(0.054)	(0.017)	
SMD2 Devices Size 8763mm/3425mils																
SMD150F	8.00	9.40	—	3.00	6.00	6.71	0.56	0.71	0.56	0.71	3.68	3.94	0.66	1.37	0.43	S4
	(0.315)	(0.370)	—	(0.118)	(0.236)	(0.264)	(0.022)	(0.028)	(0.022)	(0.028)	(0.145)	(0.155)	(0.026)	(0.054)	(0.017)	
SMD150F/33	8.00	9.40	—	3.00	6.00	6.71	0.56	0.71	0.56	0.71	3.68	3.94	0.66	1.37	0.43	S4
	(0.315)	(0.370)	—	(0.118)	(0.236)	(0.264)	(0.022)	(0.028)	(0.022)	(0.028)	(0.145)	(0.155)	(0.026)	(0.054)	(0.017)	
SMDH160	8.00	9.40	—	3.00	6.00	6.71	0.56	0.71	0.56	0.71	3.68	3.94	0.66	1.37	0.43	S4
	(0.315)	(0.370)	—	(0.118)	(0.236)	(0.264)	(0.022)	(0.028)	(0.022)	(0.028)	(0.145)	(0.155)	(0.026)	(0.054)	(0.017)	
SMD185F	8.00	9.40	—	3.00	6.00	6.71	0.56	0.71	0.56	0.71	3.68	3.94	0.66	1.37	0.43	S4
	(0.315)	(0.370)	—	(0.118)	(0.236)	(0.264)	(0.022)	(0.028)	(0.022)	(0.028)	(0.145)	(0.155)	(0.026)	(0.054)	(0.017)	
SMD200F	8.00	9.40	—	3.00	6.00	6.71	0.56	0.71	0.56	0.71	3.68	3.94	0.66	1.37	0.43	S4
	(0.315)	(0.370)	—	(0.118)	(0.236)	(0.264)	(0.022)	(0.028)	(0.022)	(0.028)	(0.145)	(0.155)	(0.026)	(0.054)	(0.017)	
SMD250F	8.00	9.40	—	3.00	6.00	6.71	0.56	0.71	0.56	0.71	3.68	3.94	0.66	1.37	0.43	S4
	(0.315)	(0.370)	—	(0.118)	(0.236)	(0.264)	(0.022)	(0.028)	(0.022)	(0.028)	(0.145)	(0.155)	(0.026)	(0.054)	(0.017)	

Figures S5-S12 Typical Time-to-Trip Curves at 20°C for Surface-Mount Devices

femtoSMDCxxxF

A = femtoSMDC005F
B = femtoSMDC008F
C = femtoSMDC010F
D = femtoSMDC012F
E = femtoSMDC016F
F = femtoSMDC020F
G = femtoSMDC035F

Figure S5

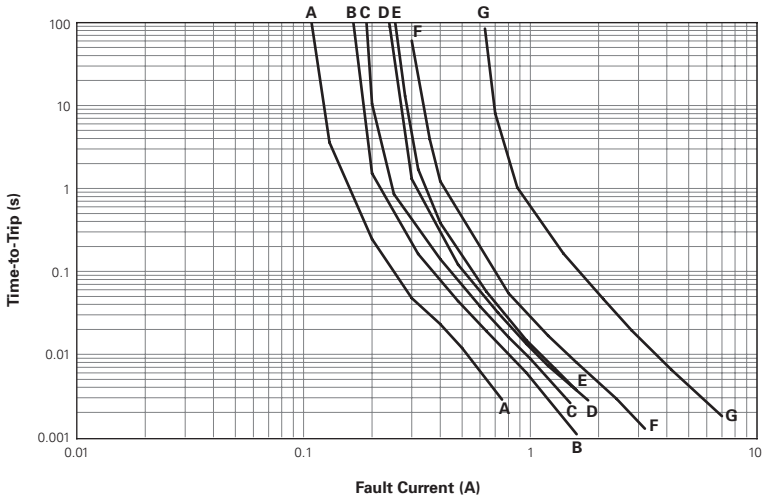

picoSMDCxxxS

A = picoSMDC010S
B = picoSMDC012S
C = picoSMDC020S
D = picoSMDC035S
E = picoSMDC050S
F = picoSMDC075S
G = picoSMDC110S

Figure S6

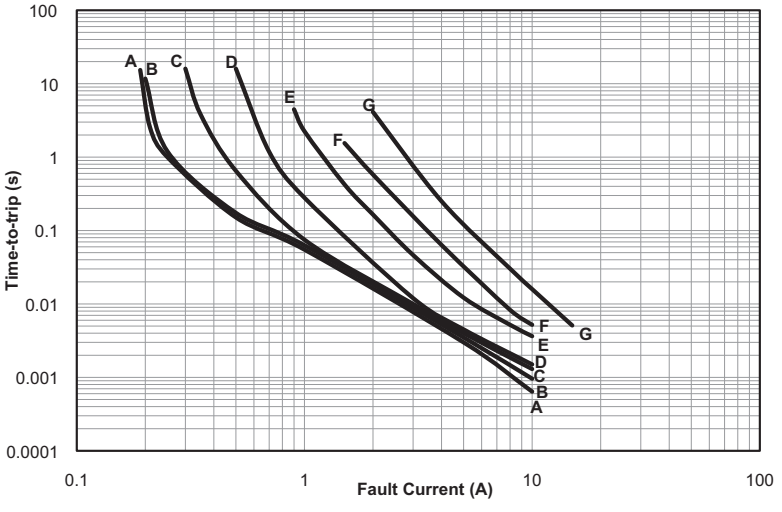

nanoSMDCxxxF

A = nanoSMDC012F
B = nanoSMDC016F
C = nanoSMDC020F
D = nanoSMDC025F
E = nanoSMDC035F
F = nanoSMDC050F/13.2
G = nanoSMDC075F
H = nanoSMDC110F
I = nanoSMDC150F
J = nanoSMDC200F

Figure S7

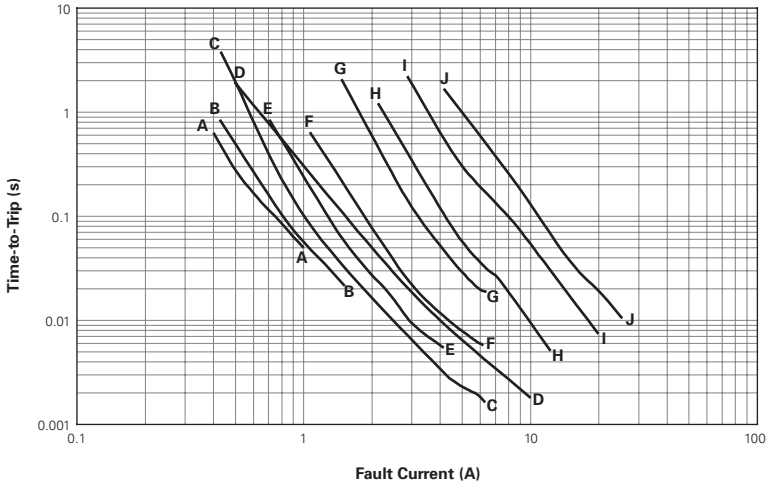

Figures S5-S12 Typical Time-to-Trip Curves at 20°C for PolySwitch Surface-Mount Devices Cont'd

microSMDxxxF

A = microSMD005F
B = microSMD010F
C = microSMD035F
D = microSMD050F
E = microSMD075F
F = microSMD110F
G = microSMD150F
H = microSMD175F
I = microSMD200F

Figure S8

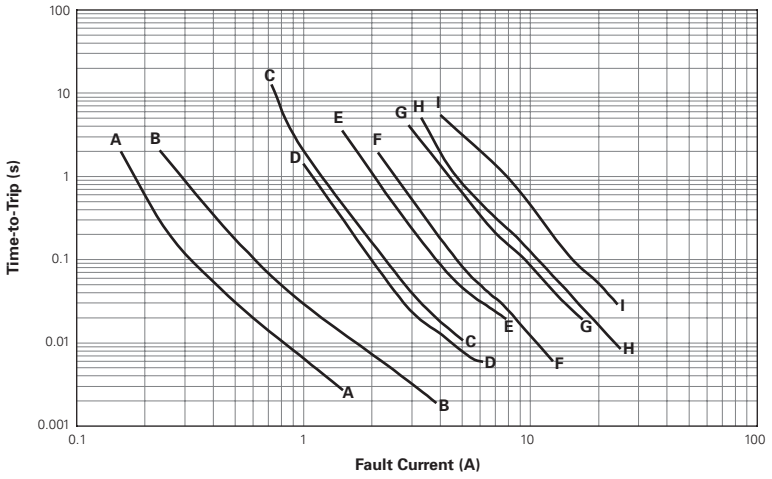

miniSMDCxxxF

A = miniSMDC010F, miniSMDC014F
B = miniSMDC020F
C = miniSMDC030F
D = miniSMDC050F
E = miniSMDC075F
F = miniSMDC075F/24
G = miniSMDC075F/33
H = miniSMDC100F, miniSMDC110F
I = miniSMDC110F/16
J = miniSMDC110F/24
K = miniSMDC125F
L = miniSMDC125F/16
M = miniSMDC150F, miniSMDC150F/12
N = miniSMDC150F/16
O = miniSMDC150F/24
P = miniSMDC160F
Q = miniSMDC200F
R = miniSMDC200F/16
S = miniSMDC260F
T = miniSMDC260F/12,miniSMDC260F/13.2 miniSMDC260F/16
U = miniSMDC300F

Figure S9

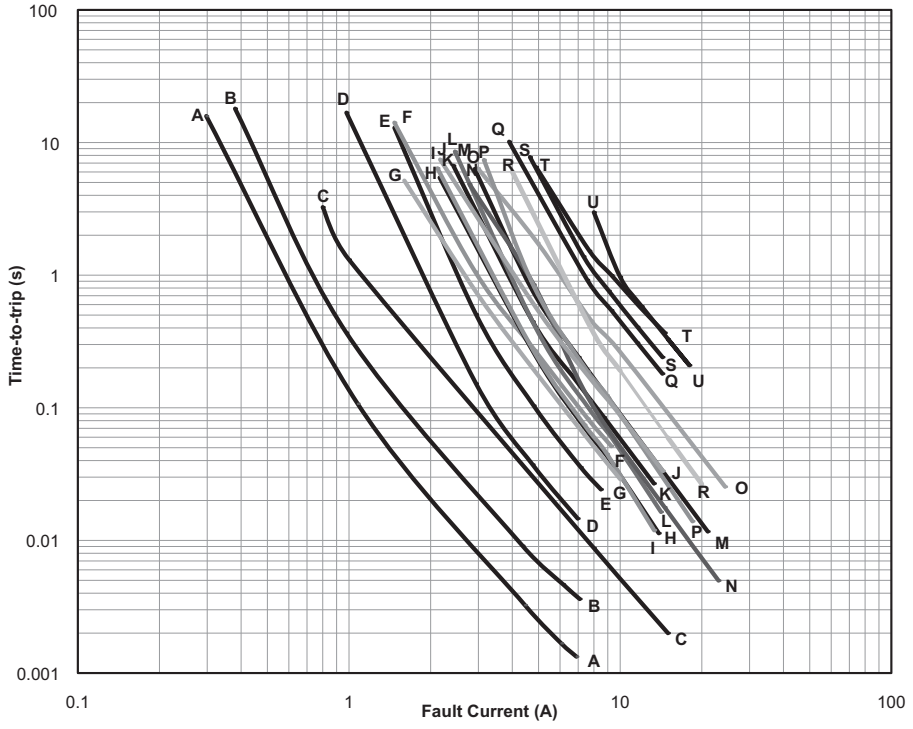

midSMD

A = SMD030F-2018
B = decaSMDC050F/60
C = SMD100F-2018
D = SMD150F-2018
E = SMD200F-2018

Figure S10

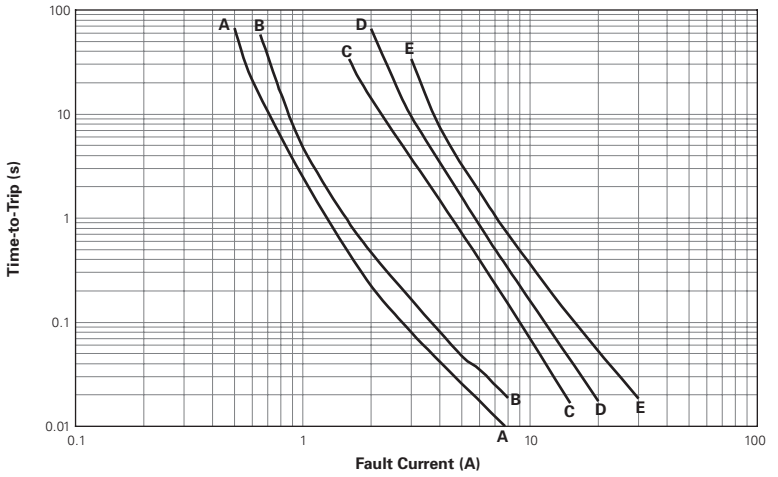

SMDxxxF

A = SMD030F
B = SMD050F
C = SMD075F, SMD075F/60
D = SMD100F, SMD100F/33
E = SMDH120
F = SMD150F/33-2920
G = SMD125F
H = SMD200F/24-2920
I = SMD250F/15-2920
J = SMD260F
K = SMD300F, SMD300F/15

Figure S11

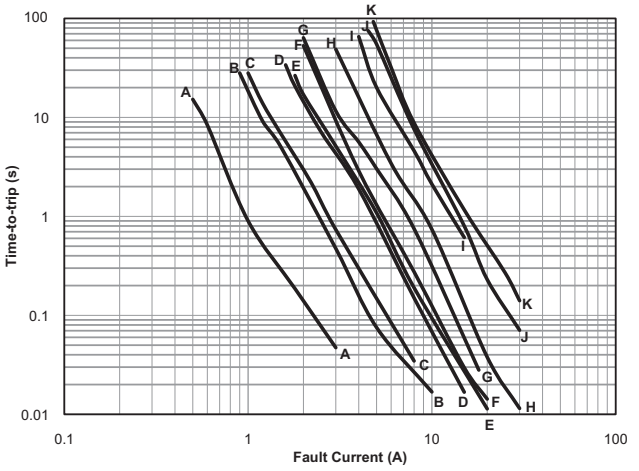

SMD2xxxF

A = SMD150F, SMD150F/33
B = SMDH160
C = SMD185F
D = SMD200F
E = SMD250F

Figure S12

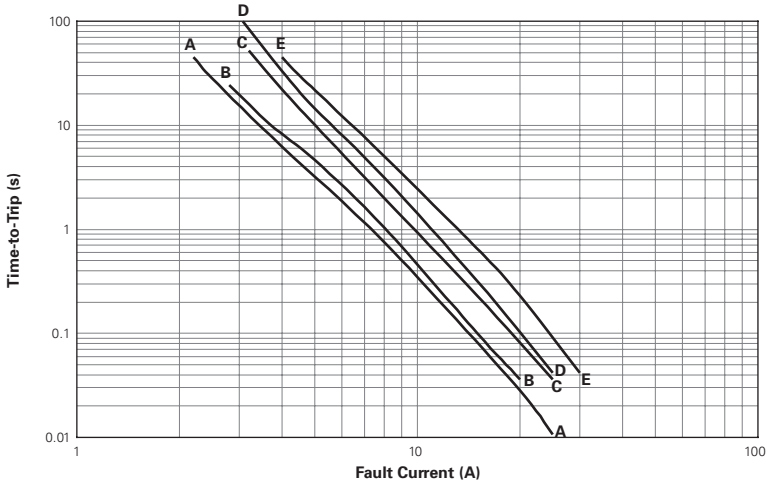

Table S5 Physical Characteristics and Environmental Specifications for PolySwitch Surface-Mount Devices Operating Temperature Range -40°C to 85°C, -40°C to 125°C for SMDH120 and SMDH160

Physical Characteristics

Terminal Pad Material	100% Matte Tin with Nickel Underplate
Soldering Characteristics	ANSI/J-STD-002 Category 3 for femtoSMD, picoSMD, nanoSMD, microSMD and miniSMD Series ANSI/J-STD-002 Category 1 for SMD Series
SolderHeat Withstand	per IEC-STD 68-2-20, Test Tb, Section 5, Method 1A
Flammability Resistance	per IEC 695-2-2 Needle Flame Test for 20 seconds
Recommended Storage Conditions	40°C max, 70% R.H. max; Devices May Not Meet Specified Ratings if Storage Conditions Are Exceeded

Environmental Specifications

Test	Test Method	Conditions	Resistance Change
Storage Life	PS300, Section 5.3.2	60°C, 1000 hrs	±3% typ
		85°C, 1000 hrs	±5% typ
Humidity Aging	PS300, Section 5.3.1	85°C, 85% RH, 100 hrs	±1.2% typ
Thermal Shock	MIL-STD-202, Method 107G	85°C, -40°C (20 Times)	-33% typ
		125°C, -55°C (10 Times)	-33% typ
Vibration	MIL-STD-883C	per MIL-STD-883C	No Change
Solvent Resistance	PS300, Section 5.2.2	Freon	No Change
		Trichloroethane	No Change
		Hydrocarbons	No Change

Table S6 Packaging and Marking Information for PolySwitch Surface-Mount Devices

Part Number	Tape and Reel Quantity	Standard Package	Part Marking	Recommended Pad Layout Figures [mm (in)] Dimension A (Nom)	Dimension B (Nom)	Dimension C (Nom)	Agency Recognition
femtoSMDC Series Size 1608mm/0603mils							
femtoSMDC005F	4,000	20,000	A	0.80 (0.032)	0.60 (0.024)	0.80 (0.032)	UL, CSA
femtoSMDC008F	4,000	20,000	T	0.80 (0.032)	0.60 (0.024)	0.80 (0.032)	UL, CSA
femtoSMDC010F	4,000	20,000	B	0.80 (0.032)	0.60 (0.024)	0.80 (0.032)	UL, CSA, TÜV
femtoSMDC012F	5,000	25,000	C	0.80 (0.032)	0.60 (0.024)	0.80 (0.032)	UL, CSA
femtoSMDC016F	5,000	25,000	E	0.80 (0.032)	0.60 (0.024)	0.80 (0.032)	UL, CSA
femtoSMDC020F	5,000	25,000	F	0.80 (0.032)	0.60 (0.024)	0.80 (0.032)	UL, CSA, TÜV
femtoSMDC035F	5,000	25,000	K	0.80 (0.032)	0.60 (0.024)	0.80 (0.032)	Pending
picoSMDC Series Size 2012mm/0805mils							
picoSMDC010S	3,000	15,000	C	1.50 (0.060)	1.00 (0.039)	1.20 (0.047)	UL, CSA, TÜV
picoSMDC012S	4,000	20,000	F	1.50 (0.060)	1.00 (0.039)	1.20 (0.047)	UL, CSA, TÜV
picoSMDC020S	4,000	20,000	H	1.50 (0.060)	1.00 (0.039)	1.20 (0.047)	UL, CSA, TÜV
picoSMDC035S	4,000	20,000	I	1.50 (0.060)	1.00 (0.039)	1.20 (0.047)	UL, CSA, TÜV
picoSMDC050S	3,000	15,000	K	1.50 (0.060)	1.00 (0.039)	1.20 (0.047)	UL, CSA, TÜV
NEW picoSMDC075S	3,000	15,000	M	1.50 (0.060)	1.00 (0.039)	1.20 (0.047)	UL, CSA, TÜV
NEW picoSMDC110S	3,000	15,000	S	1.50 (0.060)	1.00 (0.039)	1.20 (0.047)	UL, TÜV
nanoSMDC Series Size 3216mm/1206mils							
nanoSMDC012F	3,000	15,000	P	1.60 (0.063)	1.00 (0.039)	2.00 (0.079)	UL, CSA, TÜV
nanoSMDC016F	3,000	15,000	N	1.60 (0.063)	1.00 (0.039)	2.00 (0.079)	UL, CSA, TÜV
nanoSMDC020F	3,000	15,000	02	1.60 (0.063)	1.00 (0.039)	2.00 (0.079)	UL, CSA, TÜV
nanoSMDC025F	3,000	15,000	C	1.60 (0.063)	1.00 (0.039)	2.00 (0.079)	UL, CSA, TÜV
nanoSMDC035F	3,000	15,000	03	1.60 (0.063)	1.00 (0.039)	2.00 (0.079)	UL, CSA, TÜV
nanoSMDC050F/13.2	3,000	15,000	M	1.60 (0.063)	1.00 (0.039)	2.00 (0.079)	UL, CSA, TÜV
nanoSMDC075F	3,000	15,000	L	1.60 (0.063)	1.00 (0.039)	2.00 (0.079)	UL, CSA, TÜV
nanoSMDC110F	3,000	15,000	K	1.60 (0.063)	1.00 (0.039)	2.00 (0.079)	UL, CSA, TÜV
nanoSMDC150F	3,000	15,000	15	1.60 (0.063)	1.00 (0.039)	2.00 (0.079)	UL, CSA, TÜV
nanoSMDC200F	3,000	15,000	T	1.60 (0.063)	1.00 (0.039)	2.00 (0.079)	UL, CSA, TÜV

RoHS Compliant, ELV Compliant HF Halogen Free

Table S6 Packaging and Marking Information for PolySwitch Surface-Mount Devices Cont'd

Part Number	Tape and Reel Quantity	Standard Package	Part Marking	Recommended Pad Layout Figures [mm (in)] Dimension A (Nom)	Dimension B (Nom)	Dimension C (Nom)	Agency Recognition
microSMD Series Size 3225mm/1210mils							
microSMD005F	4,000	20,000	05	2.50 (0.098)	1.00 (0.039)	2.00 (0.079)	UL, CSA, TÜV
microSMD010F	4,000	20,000	10	2.50 (0.098)	1.00 (0.039)	2.00 (0.079)	UL, CSA, TÜV
microSMD035F	4,000	20,000	3	2.50 (0.098)	1.00 (0.039)	2.00 (0.079)	UL, CSA, TÜV
microSMD050F	4,000	20,000	50	2.50 (0.098)	1.00 (0.039)	2.00 (0.079)	UL, CSA, TÜV
microSMD075F	4,000	20,000	75	2.50 (0.098)	1.00 (0.039)	2.00 (0.079)	UL, CSA, TÜV
microSMD110F	4,000	20,000	11	2.50 (0.098)	1.00 (0.039)	2.00 (0.079)	UL, CSA, TÜV
microSMD150F	4,000	20,000	15	2.50 (0.098)	1.00 (0.039)	2.00 (0.079)	UL, CSA, TÜV
microSMD175F	4,000	20,000	17	2.50 (0.098)	1.00 (0.039)	2.00 (0.079)	UL, CSA, TÜV
microSMD200F	3,000	15,000	20	2.50 (0.098)	1.00 (0.039)	2.00 (0.079)	UL, CSA, TÜV
miniSMDC Series Size 4532mm/1812mils							
miniSMDC010F	2,000	10,000	10	3.15 (0.124)	1.68 (0.066)	3.10 (0.122)	UL, CSA, TÜV
miniSMDC014F	2,000	10,000	14	3.15 (0.124)	1.68 (0.066)	3.10 (0.122)	UL, CSA, TÜV
miniSMDC020F	2,000	10,000	2	3.15 (0.124)	1.68 (0.066)	3.10 (0.122)	UL, CSA, TÜV
miniSMDC030F	2,000	10,000	3	3.15 (0.124)	1.68 (0.066)	3.10 (0.122)	UL, CSA, TÜV
miniSMDC050F	2,000	10,000	5	3.15 (0.124)	1.68 (0.066)	3.10 (0.122)	UL, CSA, TÜV
miniSMDC075F	2,000	10,000	7	3.15 (0.124)	1.68 (0.066)	3.10 (0.122)	UL, CSA, TÜV
miniSMDC075F/24	1,500	7,500	075F 24V	3.15 (0.124)	1.68 (0.066)	3.10 (0.122)	UL, CSA, TÜV
NEW miniSMDC075F/33	1,500	7,500	075F 33V	3.15 (0.124)	1.68 (0.066)	3.10 (0.122)	UL, CSA, TÜV
miniSMDC100F	2,000	10,000	1	3.15 (0.124)	1.68 (0.066)	3.10 (0.122)	UL, CSA, TÜV
miniSMDC110F	2,000	10,000	1	3.15 (0.124)	1.68 (0.066)	3.10 (0.122)	UL, CSA, TÜV
miniSMDC110F/16	2,000	10,000	110F 16V	3.15 (0.124)	1.68 (0.066)	3.10 (0.122)	UL, CSA, TÜV
miniSMDC110F/24	1,500	7,500	110F 24V	3.15 (0.124)	1.68 (0.066)	3.10 (0.122)	UL, CSA, TÜV
miniSMDC125F	2,000	10,000	12	3.15 (0.124)	1.68 (0.066)	3.10 (0.122)	UL, CSA, TÜV
miniSMDC125F/16	2,000	10,000	125F 16V	3.15 (0.124)	1.68 (0.066)	3.10 (0.122)	UL, CSA, TÜV
miniSMDC150F	2,000	10,000	15	3.15 (0.124)	1.68 (0.066)	3.10 (0.122)	UL, CSA, TÜV
miniSMDC150F/12	2,000	10,000	150F 12V	3.15 (0.124)	1.68 (0.066)	3.10 (0.122)	UL, CSA, TÜV
miniSMDC150F/16	2,000	10,000	150 16V	3.15 (0.124)	1.68 (0.066)	3.10 (0.122)	UL, CSA, TÜV
miniSMDC150F/24	1,000	5,000	150F 24V	3.15 (0.124)	1.68 (0.066)	3.10 (0.122)	UL, CSA, TÜV
miniSMDC160F	2,000	10,000	16	3.15 (0.124)	1.68 (0.066)	3.10 (0.122)	UL, CSA, TÜV
miniSMDC200F	2,000	10,000	20	3.15 (0.124)	1.68 (0.066)	3.10 (0.122)	UL, CSA, TÜV
NEW miniSMDC200F/16	2,000	10,000	200F 16V	3.15 (0.124)	1.68 (0.066)	3.10 (0.122)	UL
miniSMDC260F	2,000	10,000	260F	3.15 (0.124)	1.68 (0.066)	3.10 (0.122)	UL, CSA, TÜV
miniSMDC260F/12	1,500	7,500	260F 12V	3.15 (0.124)	1.68 (0.066)	3.10 (0.122)	UL, CSA, TÜV
miniSMDC260F/13.2	1,500	7,500	260F 13V	3.15 (0.124)	1.68 (0.066)	3.10 (0.122)	UL, CSA, TÜV
miniSMDC260F/16	1,500	7,500	260F 16V	3.15 (0.124)	1.68 (0.066)	3.10 (0.122)	UL, CSA, TÜV
miniSMDC300F	2,000	10,000	30	3.15 (0.124)	1.68 (0.066)	3.10 (0.122)	UL, CSA, TÜV
midSMD Series Size 5050mm/2018mils							
SMD030F-2018	4,000	20,000	A03F	4.60 (0.18)	1.50 (0.059)	3.40 (0.134)	UL, CSA, TÜV
decaSMDC050F/60	1,000	5,000	050F 60V	4.32 (0.17)	1.40 (0.055)	3.61 (0.142)	UL, CSA, TÜV
SMD100F-2018	4,000	20,000	A10F	4.60 (0.18)	1.50 (0.059)	3.40 (0.134)	UL, CSA, TÜV
SMD150F-2018	4,000	20,000	A15F	4.60 (0.18)	1.50 (0.059)	3.40 (0.134)	UL, CSA, TÜV
SMD200F-2018	4,000	20,000	A20F	4.60 (0.18)	1.50 (0.059)	3.40 (0.134)	UL, CSA, TÜV

Table S6 Packaging and Marking Information for PolySwitch Surface-Mount Devices Cont'd

Part Number	Tape and Reel Quantity	Standard Package	Part Marking	Recommended Pad Layout Figures [mm (in)] Dimension A (Nom)	Dimension B (Nom)	Dimension C (Nom)	Agency Recognition
SMD Series Size 7555mm/2920mils							
SMD030F	2,000	10,000	030F	3.10 (0.12)	2.30 (0.09)	5.10 (0.201)	UL, CSA, TÜV
SMD050F	2,000	10,000	050F	3.10 (0.12)	2.30 (0.09)	5.10 (0.201)	UL, CSA, TÜV
SMD075F	2,000	10,000	075F	3.10 (0.12)	2.30 (0.09)	5.10 (0.201)	UL, CSA, TÜV
SMD075F/60	2,000	10,000	756F	3.10 (0.12)	2.30 (0.09)	5.10 (0.201)	UL, CSA, TÜV
SMD100F	2,000	10,000	100F	3.10 (0.12)	2.30 (0.09)	5.10 (0.201)	UL, CSA, TÜV
SMD100F/33	2,000	10,000	103F	3.10 (0.12)	2.30 (0.09)	5.10 (0.201)	UL, CSA, TÜV
SMDH120	2,000	10,000	H12	3.10 (0.12)	2.30 (0.09)	5.10 (0.201)	UL, CSA, TÜV
SMD125F	2,000	10,000	125F	3.10 (0.12)	2.30 (0.09)	5.10 (0.201)	UL, CSA, TÜV
NEW SMD150F/33-2920	2,000	10,000	S15F	3.10 (0.12)	2.30 (0.09)	5.10 (0.201)	UL, CSA, TÜV
NEW SMD200F/24-2920	2,000	10,000	S20F	3.10 (0.12)	2.30 (0.09)	5.10 (0.201)	UL, CSA, TÜV
NEW SMD250F/15-2920	2,000	10,000	S25F	3.10 (0.12)	2.30 (0.09)	5.10 (0.201)	UL, CSA, TÜV
SMD260F	2,000	10,000	260F	3.10 (0.12)	2.30 (0.09)	5.10 (0.201)	UL, CSA, TÜV
SMD300F	2,000	10,000	300F	3.10 (0.12)	2.30 (0.09)	5.10 (0.201)	UL, CSA, TÜV
SMD300F/15	2,000	10,000	315F	3.10 (0.12)	2.30 (0.09)	5.10 (0.201)	UL, CSA, TÜV
SMD2 Devices Size 8763mm/3425mils							
SMD150F	1,500	7,500	150F	4.60 (0.18)	2.30 (0.09)	6.10 (0.240)	UL, CSA, TÜV
SMD150F/33	1,500	7,500	153F	4.60 (0.18)	2.30 (0.09)	6.10 (0.240)	UL, CSA, TÜV
SMDH160	1,500	7,500	160F	4.60 (0.18)	2.30 (0.09)	6.10 (0.240)	UL, CSA, TÜV
SMD185F	1,500	7,500	185F	4.60 (0.18)	2.30 (0.09)	6.10 (0.240)	UL, CSA, TÜV
SMD200F	1,500	7,500	200F	4.60 (0.18)	2.30 (0.09)	6.10 (0.240)	UL, CSA, TÜV
SMD250F	1,500	7,500	250F	4.60 (0.18)	2.30 (0.09)	6.10 (0.240)	UL, CSA, TÜV

Figure S13 Recommended Pad Layout for PolySwith Surface-Mount Devices

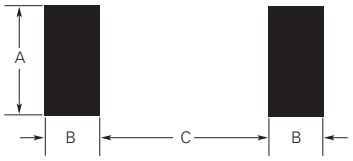

Agency Recognition for PolySwitch Surface-Mount Devices

UL	File # E74889 for all Surface-mount Devices
CSA	File # CA78165 for all Surface-mount Devices
TÜV	Certificate Number Available Upon Request (Certified to IEC 60730-1)

Solder Reflow and Rework Recommendation for PolySwitch Surface-Mount Devices

Classification Reflow Profiles

Profile Feature	Pb-Free Assembly
Average Ramp-up Rate (Ts_{MAX} to Tp)	3°C/s max
Preheat	
• Temperature min (Ts_{MIN})	150°C
• Temperature max (Ts_{MAX})	200°C
• Time (ts_{MIN} to ts_{MAX})	60-120s
Time Maintained Above:	
• Temperature (T_L)	217°C
• Time (t_L)	60-150s
Peak/Classification Temperature (Tp)	260°C
Time within 5°C of Actual Peak Temperature	
Time (tp)	30s max
Ramp-down Rate	3°C/s max
Time 25°C to Peak Temperature	8 mins max

Note: All temperatures refer to topside of the package measured on the package body surface.

Figure S14

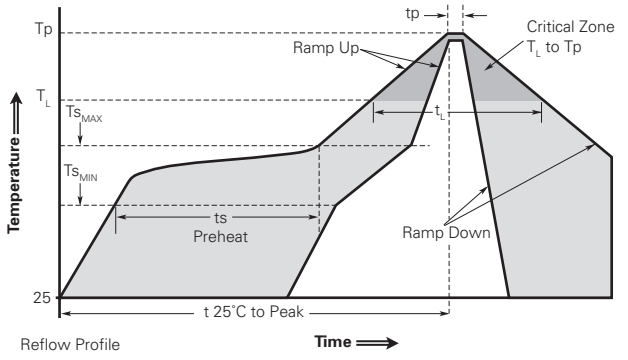

Solder Reflow

- Recommended reflow methods:
  - IR
  - Hot air
  - Nitrogen
- Recommended maximum paste thickness: 0.25mm (0.010in)
- Devices can be cleaned using standard methods and aqueous solvents.
- Experience has shown the optimum conditions for forming acceptable solder fillets occur when a reasonable amount of solder paste is placed underneath each device's termination. As such, we request that customers comply with our recommended solder pad layouts.
- Customer should validate that the solder paste amount and reflow recommendations meet its application.
- We request that customer board layouts refrain from placing raised features (e.g., vias, nomenclature, traces, etc.) underneath PolySwitch devices. It is possible that raised features could negatively impact solderability performance of our devices.

Rework

- femtoSMD, picoSMD, nanoSMD, microSMD and miniSMD series: standard industry practices. (Please also avoid direct contact to the device.)
- SMD series: Rework should be confined to removal of the installed product and replacement with a fresh device.

Table S7 Tape and Reel Specifications for Surface-Mount Devices (Millimeters)

Description	femtoSMDC EIA 481-1	picoSMDC EIA 481-1	nanoSMDC EIA 481-1	microSMD EIA 481-1	miniSMDC and decaSMDC050F/60 EIA 481-1	midSMD except decaSMDC050F/60 EIA 481-2	SMD EIA 481-2	SMD2 EIA 481-2
W	8.0 ± 0.30	8.0 ± 0.30	8.0 ± 0.30	8.0 ± 0.30	12.0 ± 0.30	16.0 ± 0.30	16.0 ± 0.30	16.0 ± 0.30
P_0	4.0 ± 0.10	4.0 ± 0.10	4.0 ± 0.10	4.0 ± 0.10	4.0 ± 0.10	4.0 ± 0.10	4.0 ± 0.10	4.0 ± 0.10
P_1	4.0 ± 0.10	4.0 ± 0.10	4.0 ± 0.10	4.0 ± 0.10	8.0 ± 0.10	8.0 ± 0.10	8.0 ± 0.10	12.0 ± 0.10
P_2	2.0 ± 0.05	2.0 ± 0.10	2.0 ± 0.05	2.0 ± 0.05	2.0 ± 0.05	2.0 ± 0.10	2.0 ± 0.10	2.0 ± 0.10
A_0	0.95 ± 0.05	1.70 ± 0.10	1.95 ± 0.10	2.9 ± 0.10	Table S8	5.11 ± 0.15	5.6 ± 0.23	6.9 ± 0.23
B_0	1.85± 0.05	2.45 ± 0.10	Table S8	Table S8	Table S8	5.6 ± 0.23	8.1 ± 0.15	9.6 ± 0.15
B_1 max	4.35	4.35	4.35	4.35	6.15	6.4	12.1	12.1
D_0	1.55 ± 0.05	1.55 ± 0.05	1.55 ± 0.05	1.55 ± 0.05	1.55 ± 0.05	1.5 + 0.10/ -.00	1.5 + 0.10/ -.00	1.5 + 0.10/ -.00
F	3.50 ± 0.05	3.50 ± 0.05	3.50 ± 0.05	3.50 ± 0.05	5.50 ± 0.10	7.50 ± 0.10	7.50 ± 0.10	7.50 ± 0.10
E_1	1.75 ± 0.10	1.75 ± 0.10	1.75 ± 0.10	1.75 ± 0.10	1.75 ± 0.10	1.75 ± 0.10	1.75 ± 0.10	1.75 ± 0.10
E_2 min	6.25	6.25	6.25	6.25	10.25	14.25	14.25	14.25
T max	0.3	0.3	0.3	0.3	0.35	0.4	0.4	0.4
T_1 max	0.1	0.1	0.1	0.1	0.1	0.1	0.1	0.1
K_0	Table S8	Table S8	Table S8	Table S8	Table S8	1.8 ± 0.15	3.2 ± 0.15	3.4 ± 0.15

Table S8 Tape and Reel Specifications for PolySwitch Surface-Mount Devices (Millimeters)

	femtoSMDC005F femtoSMDC008F femtoSMDC010F	femtoSMDC012F femtoSMDC016F femtoSMDC020F femtoSMDC035F	picoSMDC012S picoSMDC020S picoSMDC035S	picoSMDC010S picoSMDC050S picoSMDC075S	picoSMDC110S	All nanoSMDC Series Except nanoSMDC012F nanoSMDC016F nanoSMDC200F
A_0	0.95 ± 0.05	0.95 ± 0.05	1.70 ± 0.1	1.70 ± 0.1	1.70 ± 0.1	1.95 ± 0.1
B_0	1.85 ± 0.05	1.85 ± 0.05	2.45 ± 0.1	2.45 ± 0.1	2.45 ± 0.1	3.50 +0.1/-0.08
K_0	0.90 ± 0.1	0.55 ± 0.05	0.86 ± 0.1	1.12 ± 0.1	1.35 ± 0.1	0.89 ± 0.1

	nanoSMDC012F nanoSMDC016F nanoSMDC200F	All microSMD series except microSMD200F	microSMD200F	miniSMDC010F miniSMDC014F~075F miniSMDC100F~110F/16 miniSMDC125F~150F/16 miniSMDC160F~260F miniSMDC300F	miniSMDC075F/24 miniSMDC075F/33 miniSMDC110F/24 miniSMDC260F/12 miniSMDC260F/13.2 miniSMDC260F/16	miniSMDC150F/24	decaSMDC050F/60
A_0	1.95 ± 0.1	2.9 ± 0.1	2.9 ± 0.1	3.5 ± 0.1	3.7 ± 0.1	3.7 ± 0.1	5.0 ± 0.1
B_0	3.5 ± 0.1	3.5 ± 0.1	3.55 ± 0.1	4.95 ± 0.1	4.9 ± 0.1	4.9 ± 0.1	5.4 ± 0.1
K_0	1.27 ± 0.1	0.9 ± 0.1	1.27 ± 0.1	0.9 ± 0.1	1.4 ± 0.1	1.78 ± 0.1	1.7 ± 0.1

Table S9 Reel Dimensions for PolySwitch Surface-Mount Devices (Millimeters)

	femto/pico/nano/microSMD	miniSMDC	midSMD	SMD	SMD2
A max	185	185	330	330	330
N min	50	50	50	50	50
W_1	8.4 + 1.5/-.00	12.4 + 2.0/-.00	16.4 + 2.0/-.00	16.4 + 2.0/-.00	16.4 + 2.0/-.00
W_2 max	14.4	18.4	22.4	22.4	22.4

Figure S15 EIA Referenced Taped Component Dimensions for PolySwitch Surface-Mount Devices

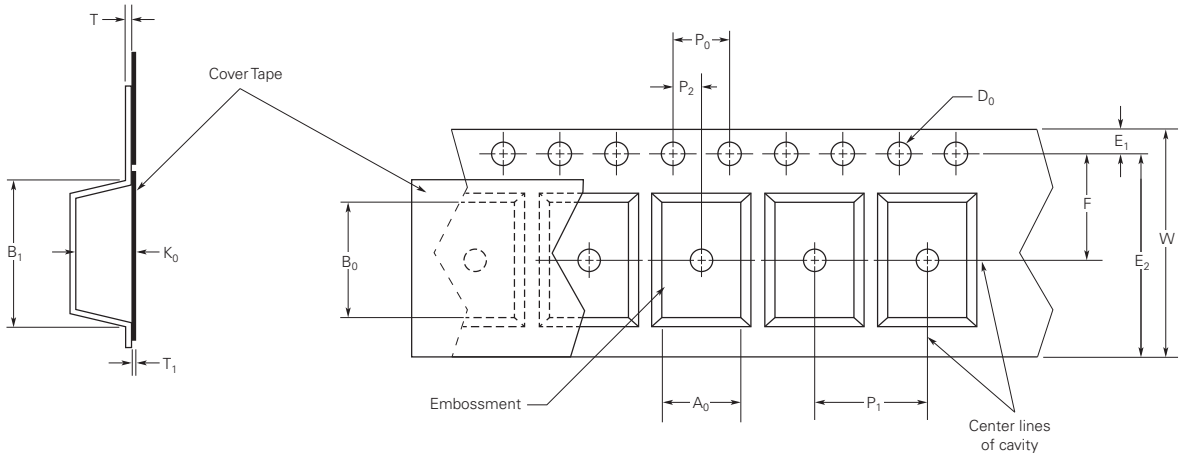

Figure S16 EIA Referenced Reel Dimensions for PolySwitch Surface-Mount Devices

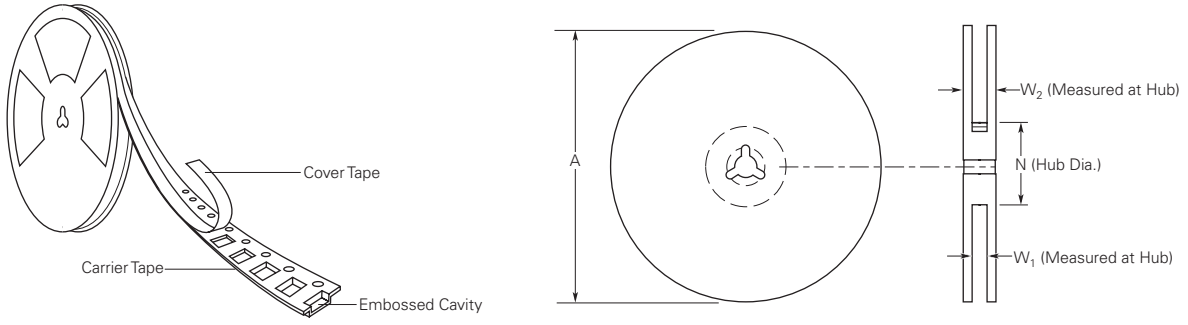

Part Numbering System for PolySwitch Surface-Mount Devices

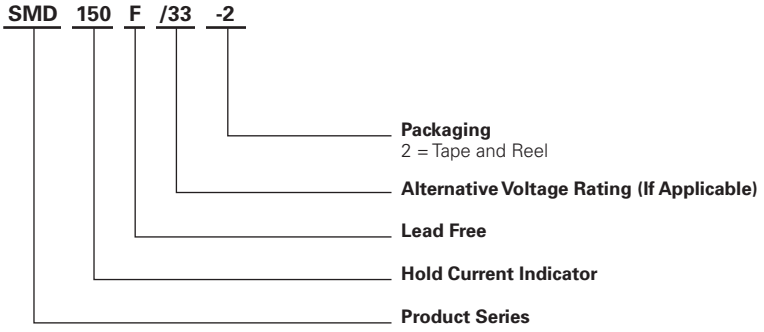

Warning:

- Users should independently evaluate the suitability of and test each product selected for their own application.
- Operation beyond the maximum ratings or improper use may result in device damage and possible electrical arcing and flame.
- These devices are intended for protection against damage caused by occasional overcurrent or overtemperature fault conditions and should not be used when repeated fault conditions or prolonged trip events are anticipated.
- Contamination of the PPTC material with certain silicone-based oils or some aggressive solvents can adversely impact the performance of the devices.
- Device performance can be impacted negatively if devices are handled in a manner inconsistent with recommended electronic, thermal, and mechanical procedures for electronic components.
- PPTC devices are not recommended for installation in applications where the device is constrained such that its PTC properties are inhibited, for example in rigid potting materials or in rigid housings, which lack adequate clearance to accommodate device expansion.
- Operation in circuits with a large inductance can generate a circuit voltage (Ldi/dt) above the rated voltage of the device.

Общество с ограниченной ответственностью «МосЧип» ИНН 7719860671 / КПП 771901001
Адрес: 105318, г.Москва, ул.Щербаковская д.3, офис 1107

Данный компонент на территории Российской Федерации

Вы можете приобрести в компании MosChip.

Для оперативного оформления запроса Вам необходимо перейти по данной ссылке:

http://moschip.ru/get-element

Вы можете разместить у нас заказ для любого Вашего проекта, будь то серийное производство или разработка единичного прибора.

В нашем ассортименте представлены ведущие мировые производители активных и пассивных электронных компонентов.

Нашей специализацией является поставка электронной компонентной базы двойного назначения, продукции таких производителей как XILINX, Intel (ex.ALTERA), Vicor, Microchip, Texas Instruments, Analog Devices, Mini-Circuits, Amphenol, Glenair.

Сотрудничество с глобальными дистрибьюторами электронных компонентов, предоставляет возможность заказывать и получать с международных складов практически любой перечень компонентов в оптимальные для Вас сроки.

На всех этапах разработки и производства наши партнеры могут получить квалифицированную поддержку опытных инженеров.

Система менеджмента качества компании отвечает требованиям в соответствии с ГОСТ Р ИСО 9001, ГОСТ РВ 0015-002 и ЭС РД 009

Офис по работе с юридическими лицами:

105318, г.Москва, ул.Щербаковская д.3, офис 1107, 1118, ДЦ «Щербаковский»

Телефон: +7 495 668-12-70 (многоканальный)

Факс: +7 495 668-12-70 (доб.304)

E-mail: info@moschip.ru

Skype отдела продаж:
moschip.ru
moschip.ru_4
moschip.ru_6
moschip.ru_9