Type HS Series

Key Features

- **Established product with proven reliability**
  - **Leading the way with over 50 years of design and manufacturing experience**
- **5 Watts to 300 Watts (500 Watt and 1000 Watt versions available)**
  - **Largest range on the market**
- **Versatile product**
  - **Bench mark in every industry**
- **Custom designs**
  - **Windings, terminations, mountings - We have a solution for your application**
- **Low resistance, low inductance and higher voltage versions available**
  - **Specialising the standard**

Applications

- **Braking Resistor**
- **Balancing Resistor**
- **Capacitor Charging & Discharging**
- **Crowbar**
- **Filter**
- **Electrical Machinery general use**
- **Available through Distribution**

TE Connectivity are the leading European supplier of standard and custom designed aluminium housed resistors for general-purpose use, power supplies, power generation and the traction industry. The HS is a range of extremely stable, high quality wire wound resistors capable of dissipating high power in a limited space with relatively low surface temperature. The power is rapidly dissipated as heat through the aluminium housing to a specified heatsink.

The resistors are made from quality materials for optimum reliability and stability. TE can test resistors to conform to relevant international, MIL or customer specifications.

TE are happy to advise on the use of resistors for pulse applications and to supply information for high voltage use and low-ohmic value, alternative mountings and termination type.

Characteristics - Electrical
HSA & HSC - 5 Watts to 75 Watts

	HSA5	HSA10	HSA25	HSA50	HSC75
Dissipation @ 25°C with Heatsink (Watts):	10	16	25	50	75
Without Heatsink:	5.5	8	12.5	20	45
Ohmic Value Min (Ohms):	R01	R01	R01	R01	R05
Max:	10K	15K	36K	100K	50K
Max. Working Voltage (DC or ACrms) Volts:	160	265	550	1250	1400
Dielectric Strength (AC Peak) Volts:	1400	1400	2500	2500	5000
Stability (% resistance change, 1000 hours) (%):	1	1	1	1	2
Standard Heatsink - Area (mm²):	41500	41500	53500	53500	99500
Thickness (mm):	1	1	1	1	3
Number of Mounting Holes:	2 hole	2 hole	2 hole	2 hole	4 hole

Characteristics - Electrical
HSC - 100 Watts to 300 Watts

	HSC100	HSC150	HSC200	HSC250	HSC300
Dissipation @ 25°C with Heatsink (Watts):	100	150	200	250	300
Without Heatsink:	50	55	50	60	75
Ohmic Value Min (Ohms):	R05	R10	R10	R10	R10
Max:	100K	100K	50K	68K	82K
Max. Working Voltage (DC or ACrms) Volts:	1900	2500	1900	2200	2500
Dielectric Strength (AC Peak) Volts:	5000	5000	5600	5600	5600
Stability (% resistance change, 1000 hours) (%):	2	2	3	3	3
Standard Heatsink - Area (mm²):	99500	99500	375000	476500	578000
Thickness (mm):	3	3	3	3	3
Number of Mounting Holes:	4 hole	4 hole	6 hole	6 hole	6 hole

Dimensions are in millimeters and inches unless otherwise specified. Values in brackets are standard equivalents.

Dimensions are shown for reference purposes only. Specifications subject to change.

For email, phone or live chat, go to: **te.com/help**

Type HS Series

Characteristics - Electrical

Long Term Stability:	For improvements in long-term stability, resistors must be derated as follows; for 50% of stated ΔR maximum dissipation must not exceed 70% of rating; for 25% of stated ΔR maximum, dissipation must not exceed 50% of rating
Insulation Resistance:	Dry: 10,000MΩ minimum. After moisture test: 1000MΩ minimum.
Heat Dissipation:	Although the use of proprietary heat sinks with lower thermal resistance is acceptable, up rating is not recommended. The use of proprietary heat sink compound to improve thermal conductivity is recommended for optimum performance of all sizes but essential for HSC200, HSC250 & HSC300
Specification:	Temperature coefficient below 100R, 50ppm/°C Temperature coefficient above 100R, 30ppm/°C Tolerance, 5% standard: 10%, 3%, 2%, 0.5% & 0.25% available Tolerance for values below R10, 10% standard

Derating Curve HSA5 to HSA50

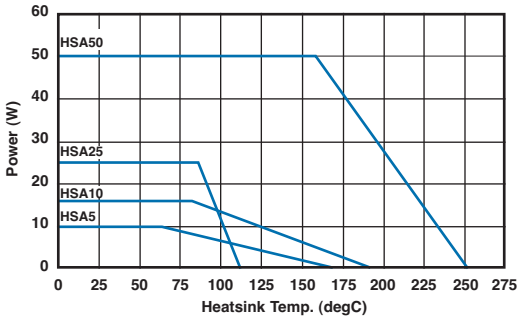

Derating Curve HSC75 to HSC300

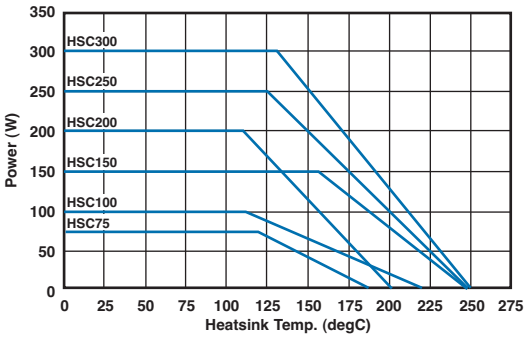

Pulse Energy HSA5 to HSC75

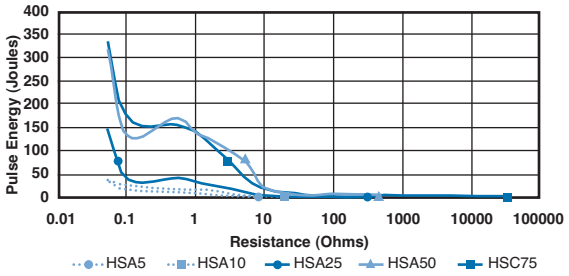

Dimensions are in millimeters and inches unless otherwise specified. Values in brackets are standard equivalents.

Dimensions are shown for reference purposes only. Specifications subject to change.

For email, phone or live chat, go to: **te.com/help**

Type HS Series

Pulse Energy HSC100 to HSC300

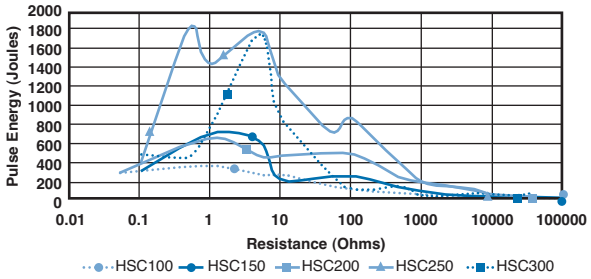

Power Overload

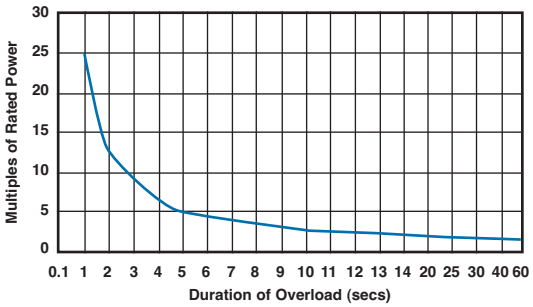

This graph indicates the amount that the rated power (at 20°C) of the standard HS Series resistor may be increased for overloads of 100mS to 60S

Surface Temperature Rise

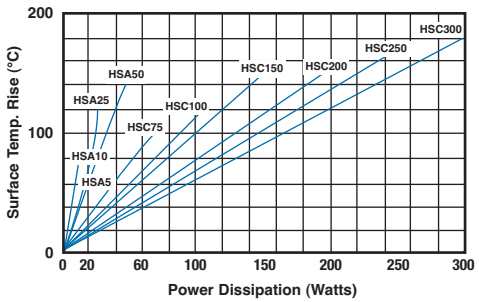

For resistor mounted on standard heatsink, related to power dissipation

Product Specifications - HSA5 - HSC150

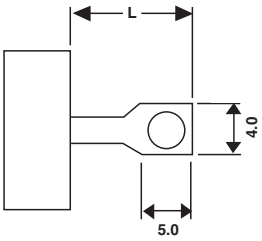

Type	L
HSA5, 10	7
HSA25, 50	10
HSC75, 100, 150	8

HSC200 - HSC300

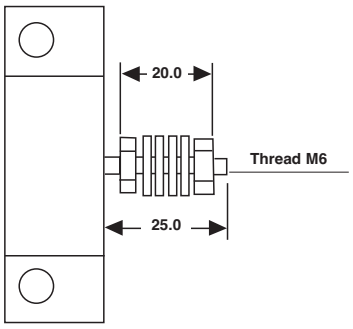

Dimensions are in millimeters and inches unless otherwise specified. Values in brackets are standard equivalents.

Dimensions are shown for reference purposes only. Specifications subject to change.

For email, phone or live chat, go to: **te.com/help**

Type HS Series

Dimensions - HSA5 - HSA50

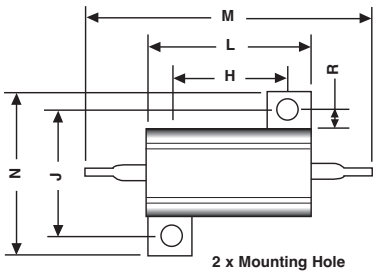

2 x Mounting Hole

HSA5 - 2.4mm
HSA10 - 2.4mm
HSA25 - 3.3mm
HSA50 - 3.3mm

HSC75 - HSC150

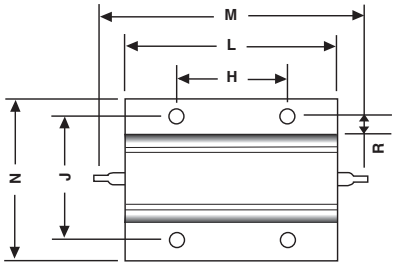

4 x Mounting Hole

HSC75 - 4.4mm
HSC100 - 4.4mm
HSC150 - 4.4mm

HSC200+

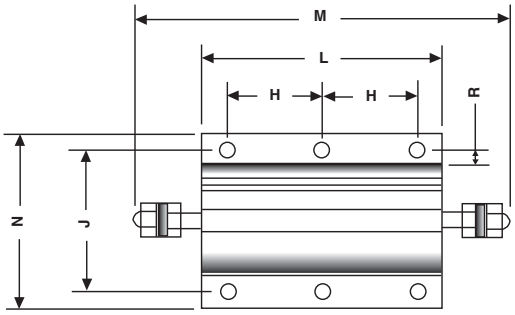

6 x Mounting Hole

HSC200 - 5.3mm
HSC250 - 5.3mm
HSC300 - 6.5mm

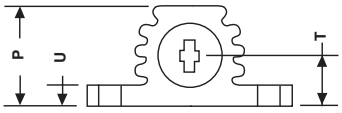

Type	H±0.3	J±0.3	K±0.2	L Max	M Max	N Max	P Max	R Min	T±0.5	U Max
HSA5	11.3	12.4	2.4	17.0	30.0	17.0	9.0	1.9	4.3	2.5
HSA10	14.3	15.9	2.4	21.0	36.5	21.0	11.0	1.9	5.2	3.2
HSA25	18.3	19.8	3.3	29.0	51.0	28.0	15.0	2.8	7.2	3.2
HSA50	39.7	21.4	3.3	51.0	72.5	30.0	17.0	2.8	8.2	3.2
HSC75	29.0	37.0	4.4	49.0	71.0	47.5	26.0	5.0	11.5	3.5
HSC100	35.0	37.0	4.4	65.5	87.5	47.5	26.0	5.0	11.5	3.5
HSC150	58.0	37.0	4.4	98.0	122.0	47.5	26.0	5.0	11.5	3.5
HSC200	35.0	57.2	5.3	90.0	143.0	73.0	42.0	5.6	20.25	5.3
HSC250	44.5	57.2	5.3	109.0	163.0	73.0	42.0	5.6	20.25	5.3
HSC300	52.0	59.0	6.5	128.0	180.0	73.0	42.0	5.6	20.25	5.3

How to Order

HS	A	50	680R	J
Common Part	**Mounting Style**	**Power Rating**	**Resistance Value**	**Tolerance**
HS - Standard NHS - Low Inductance	A - Single Opposing mounting Feet B - Flange One Side C - Flange Two Sides	10 Watt = HSA5 16 Watt = HSA10 25 Watt = HSA25 50 Watt = HSA50 75 Watt = HSA75 etc	0.1ohm (100 mille ohms) R10 1ohm (1000 mille ohms) 1R0 1K (1000 ohms) 1KO	F - 1% G - 2% E - 3% J - 5% K - 10%

TE Connectivity, TE connectivity (logo) and TE (logo) are trademarks.
Other logos, product and Company names mentioned herein may be trademarks of their respective owners.

While TE has made every reasonable effort to ensure the accuracy of the information in this datasheet, TE does not guarantee that it is error-free, nor does TE make any other representation, warranty or guarantee that the information is accurate, correct, reliable or current. TE reserves the right to make any adjustments to the information contained herein at any time without notice. TE expressly disclaims all implied warranties regarding the information contained herein, including, but not limited to, any implied warranties of merchantability or fitness for a particular purpose. The dimensions in this datasheet are for reference purposes only and are subject to change without notice. Specifications are subject to change without notice. Consult TE for the latest dimensions and design specifications.

Общество с ограниченной ответственностью «МосЧип» ИНН 7719860671 / КПП 771901001
Адрес: 105318, г.Москва, ул.Щербаковская д.3, офис 1107

Данный компонент на территории Российской Федерации

Вы можете приобрести в компании MosChip.

Для оперативного оформления запроса Вам необходимо перейти по данной ссылке:

http://moschip.ru/get-element

Вы можете разместить у нас заказ для любого Вашего проекта, будь то серийное производство или разработка единичного прибора.

В нашем ассортименте представлены ведущие мировые производители активных и пассивных электронных компонентов.

Нашей специализацией является поставка электронной компонентной базы двойного назначения, продукции таких производителей как XILINX, Intel (ex.ALTERA), Vicor, Microchip, Texas Instruments, Analog Devices, Mini-Circuits, Amphenol, Glenair.

Сотрудничество с глобальными дистрибьюторами электронных компонентов, предоставляет возможность заказывать и получать с международных складов практически любой перечень компонентов в оптимальные для Вас сроки.

На всех этапах разработки и производства наши партнеры могут получить квалифицированную поддержку опытных инженеров.

Система менеджмента качества компании отвечает требованиям в соответствии с ГОСТ Р ИСО 9001, ГОСТ РВ 0015-002 и ЭС РД 009

Офис по работе с юридическими лицами:

105318, г.Москва, ул.Щербаковская д.3, офис 1107, 1118, ДЦ «Щербаковский»

Телефон: +7 495 668-12-70 (многоканальный)

Факс: +7 495 668-12-70 (доб.304)

E-mail: info@moschip.ru

Skype отдела продаж:
moschip.ru
moschip.ru_4
moschip.ru_6
moschip.ru_9