Freescale Semiconductor, Inc.
Data Sheet: Technical Data

Document Number: KL17P64M48SF6
Rev. 6, 02/2016

Kinetis KL17 Microcontroller

48 MHz ARM® Cortex®-M0+ and 128/256 KB Flash

MKL17Z128Vxx4
MKL17Z256Vxx4
MKL17Z256CAL4R

The KL17 series is optimized for cost-sensitive and battery-powered applications requiring low-power general-purpose connectivity. The product offers:

- Embedded ROM with boot loader for flexible program upgrade
- High accuracy internal voltage and clock reference
- FlexIO to support any standard and customized serial peripheral emulation
- Down to 54uA/MHz in very low power run mode and 1.96uA in deep sleep mode (RAM + RTC retained)

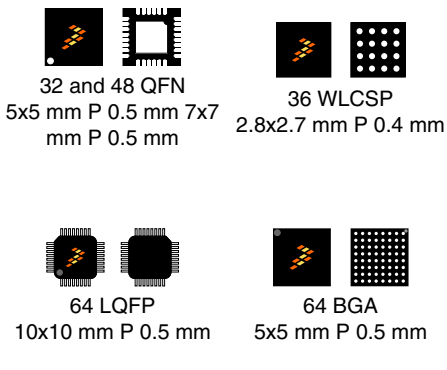

Core Processor

- ARM® Cortex®-M0+ core up to 48 MHz

Memories

- 128/256 KB program flash memory
- 32 KB SRAM
- 16 KB ROM with build-in bootloader
- 32-byte backup register

System

- 4-channel asynchronous DMA controller
- Watchdog
- Low-leakage wakeup unit
- Two-pin Serial Wire Debug (SWD) programming and debug interface
- Micro Trace Buffer
- Bit manipulation engine
- Interrupt controller

Clocks

- 48MHz high accuracy (up to 0.5%) internal reference clock
- 8MHz/2MHz high accuracy (up to 3%) internal reference clock
- 1KHz reference clock active under all low-power modes (except VLLS0)
- 32–40KHz and 3–32MHz crystal oscillator

Peripherals

- One UART module supporting ISO7816, operating up to 1.5 Mbit/s
- Two low-power UART modules supporting asynchronous operation in low-power modes
- Two I2C modules and I2C0 supporting up to 1 Mbit/s
- Two 16-bit SPI modules supporting up to 24 Mbit/s
- One FlexIO module supporting emulation of additional UART, IrDA, SPI, I2C, I2S, PWM and other serial modules, etc.
- One serial audio interface I2S
- One 16-bit 818 ksps ADC module with high accuracy internal voltage reference (Vref) and up to 16 channels
- High-speed analog comparator containing a 6-bit DAC for programmable reference input
- One 12-bit DAC
- 1.2 V internal voltage reference

Timers

- One 6-channel Timer/PWM module
- Two 2-channel Timer/PWM modules
- One low-power timer
- Periodic interrupt timer
- Real time clock

© 2014–2016 Freescale Semiconductor, Inc. All rights reserved.

Operating Characteristics

- Voltage range: 1.71 to 3.6 V
- Flash write voltage range: 1.71 to 3.6 V
- Temperature range: –40 to 85 °C for WLCSP package and –40 to 105 °C for other packages

Packages

- 64 LQFP 10mm x 10mm, 0.5mm pitch, 1.6mm thickness
- 64 MAPBGA 5mm x 5mm, 0.5mm pitch, 1.23mm thickness
- 48 QFN 7mm x 7mm, 0.5mm pitch, 0.65mm thickness
- 32 QFN 5mm x 5mm, 0.5mm pitch, 0.65mm thickness
- 36 WLCSP 2.8mm x 2.7mm, 0.4mm pitch, 0.6mm thickness

Security and Integrity

- 80-bit unique identification number per chip
- Advanced flash security

I/O

- Up to 54 general-purpose input/output pins (GPIO) and 6 high-drive pad

Low Power

- Down to 54uA/MHz in very low power run mode
- Down to 1.96uA in VLLS3 mode (RAM + RTC retained)
- Six flexible static modes

Ordering Information

Product		Memory		Package		IO and ADC channel		
Part number	Marking (Line1/ Line2)	Flash (KB)	SRAM (KB)	Pin count	Package	GPIOs	GPIOs (INT/HD)[1]	ADC channels (SE/DP)
MKL17Z128VFM4	M17P7V	128	32	32	QFN	28	19/6	11/2
MKL17Z256VFM4	M17P8V	256	32	32	QFN	28	19/6	11/2
MKL17Z128VFT4	M17P7V	128	32	48	QFN	40	24/6	18/3
MKL17Z256VFT4	M17P8V	256	32	48	QFN	40	24/6	18/3
MKL17Z128VLH4	MKL17Z128V//LH4	128	32	64	LQFP	54	31/6	20/4
MKL17Z256VLH4	MKL17Z256V//LH4	256	32	64	LQFP	54	31/6	20/4
MKL17Z128VMP4	M17P7V	128	32	64	MAPBGA	54	31/6	20/4
MKL17Z256VMP4	M17P8V	256	32	64	MAPBGA	54	31/6	20/4
MKL17Z256CAL4R	MKL17Z256CAL4	256	32	36	WLCSP	26	23/6	7/0

1. INT: interrupt pin numbers; HD: high drive pin numbers

Related Resources

Type	Description	Resource
Selector Guide	The Freescale Solution Advisor is a web-based tool that features interactive application wizards and a dynamic product selector.	Solution Advisor
Product Brief	The Product Brief contains concise overview/summary information to enable quick evaluation of a device for design suitability.	KL1XPB[1]
Reference Manual	The Reference Manual contains a comprehensive description of the structure and function (operation) of a device.	KL17P64M48SF6RM[1]
Data Sheet	The Data Sheet includes electrical characteristics and signal connections.	This document.
Chip Errata	The chip mask set Errata provides additional or corrective information for a particular device mask set.	KINETIS_L_1N71K[1]

Table continues on the next page...

Related Resources (continued)

Type	Description	Resource
Package drawing	Package dimensions are provided in package drawings.	64-LQFP: 98ASS23234W[1] 64-MAPBGA: 98ASA00420D,[1] 32-QFN: 98ASA00615D[1] 48-QFN: 98ASA00616D,[1] 36-WLCSP: 98ASA00949D[1]

1. To find the associated resource, go to http://www.nxp.com and perform a search using this term.

Table of Contents

1 Ratings....5
1.1 Thermal handling ratings....5
1.2 Moisture handling ratings....5
1.3 ESD handling ratings....5
1.4 Voltage and current operating ratings....5
2 General....6
2.1 AC electrical characteristics....6
2.2 Nonswitching electrical specifications....6
2.2.1 Voltage and current operating requirements....7
2.2.2 LVD and POR operating requirements....7
2.2.3 Voltage and current operating behaviors....8
2.2.4 Power mode transition operating behaviors....9
2.2.5 Power consumption operating behaviors....10
2.2.6 EMC radiated emissions operating behaviors....20
2.2.7 Designing with radiated emissions in mind....21
2.2.8 Capacitance attributes....21
2.3 Switching specifications....21
2.3.1 Device clock specifications....21
2.3.2 General switching specifications....22
2.4 Thermal specifications....22
2.4.1 Thermal operating requirements....22
2.4.2 Thermal attributes....23
3 Peripheral operating requirements and behaviors....24
3.1 Core modules....24
3.1.1 SWD electricals....24
3.2 System modules....25
3.3 Clock modules....25
3.3.1 MCG-Lite specifications....25
3.3.2 Oscillator electrical specifications....27
3.4 Memories and memory interfaces....29
3.4.1 Flash electrical specifications....29
3.5 Security and integrity modules....31
3.6 Analog....31
3.6.1 ADC electrical specifications....31
3.6.2 Voltage reference electrical specifications....36
3.6.3 CMP and 6-bit DAC electrical specifications....37
3.6.4 12-bit DAC electrical characteristics....39
3.7 Timers....42
3.8 Communication interfaces....42
3.8.1 SPI switching specifications....42
3.8.2 I2C....47
3.8.3 UART....48
3.8.4 I2S/SAI switching specifications....49
4 Dimensions....53
4.1 Obtaining package dimensions....53
5 Pinouts and Packaging....54
5.1 KL17 signal multiplexing and pin assignments....54
5.2 KL17 Family Pinouts....57
5.3 Recommended connection for unused analog and digital pins....61
6 Ordering parts....62
6.1 Determining valid orderable parts....62
7 Part identification....62
7.1 Description....62
7.2 Format....63
7.3 Fields....63
7.4 Example....63
8 Terminology and guidelines....64
8.1 Definitions....64
8.2 Examples....64
8.3 Typical-value conditions....65
8.4 Relationship between ratings and operating requirements....65
8.5 Guidelines for ratings and operating requirements....66
9 Revision History....66

1 Ratings

1.1 Thermal handling ratings

Table 1. Thermal handling ratings

Symbol	Description	Min.	Max.	Unit	Notes
T_{STG}	Storage temperature	–55	150	°C	1
T_{SDR}	Solder temperature, lead-free	—	260	°C	2

1. Determined according to JEDEC Standard JESD22-A103, *High Temperature Storage Life*.
2. Determined according to IPC/JEDEC Standard J-STD-020, *Moisture/Reflow Sensitivity Classification for Nonhermetic Solid State Surface Mount Devices*.

1.2 Moisture handling ratings

Table 2. Moisture handling ratings

Symbol	Description	Min.	Max.	Unit	Notes
MSL	Moisture sensitivity level	—	3	—	1

1. Determined according to IPC/JEDEC Standard J-STD-020, *Moisture/Reflow Sensitivity Classification for Nonhermetic Solid State Surface Mount Devices*.

1.3 ESD handling ratings

Table 3. ESD handling ratings

Symbol	Description	Min.	Max.	Unit	Notes
V_{HBM}	Electrostatic discharge voltage, human body model	–2000	+2000	V	1
V_{CDM}	Electrostatic discharge voltage, charged-device model	–500	+500	V	2
I_{LAT}	Latch-up current at ambient temperature of 105 °C	–100	+100	mA	3

1. Determined according to JEDEC Standard JESD22-A114, *Electrostatic Discharge (ESD) Sensitivity Testing Human Body Model (HBM)*.
2. Determined according to JEDEC Standard JESD22-C101, *Field-Induced Charged-Device Model Test Method for Electrostatic-Discharge-Withstand Thresholds of Microelectronic Components*.
3. Determined according to JEDEC Standard JESD78, *IC Latch-Up Test*.

1.4 Voltage and current operating ratings

Table 4. Voltage and current operating ratings

Symbol	Description	Min.	Max.	Unit
V_{DD}	Digital supply voltage	–0.3	3.8	V
I_{DD}	Digital supply current	—	120	mA
V_{IO}	IO pin input voltage	–0.3	V_{DD} + 0.3	V
I_D	Instantaneous maximum current single pin limit (applies to all port pins)	–25	25	mA
V_{DDA}	Analog supply voltage	V_{DD} – 0.3	V_{DD} + 0.3	V

2 General

2.1 AC electrical characteristics

Unless otherwise specified, propagation delays are measured from the 50% to the 50% point, and rise and fall times are measured at the 20% and 80% points, as shown in the following figure.

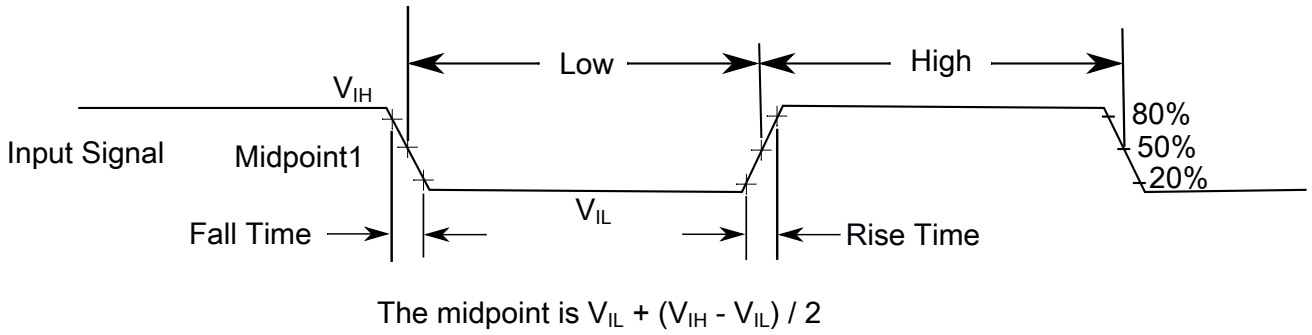

Figure 1. Input signal measurement reference

All digital I/O switching characteristics, unless otherwise specified, assume that the output pins have the following characteristics.

- C_L=30 pF loads
- Slew rate disabled
- Normal drive strength

2.2 Nonswitching electrical specifications

2.2.1 Voltage and current operating requirements

Table 5. Voltage and current operating requirements

Symbol	Description	Min.	Max.	Unit	Notes
V_{DD}	Supply voltage	1.71	3.6	V	
V_{DDA}	Analog supply voltage	1.71	3.6	V	
$V_{DD} – V_{DDA}$	V_{DD}-to-V_{DDA} differential voltage	–0.1	0.1	V	
$V_{SS} – V_{SSA}$	V_{SS}-to-V_{SSA} differential voltage	–0.1	0.1	V	
V_{IH}	Input high voltage • 2.7 V ≤ V_{DD} ≤ 3.6 V • 1.7 V ≤ V_{DD} ≤ 2.7 V	 0.7 × V_{DD} 0.75 × V_{DD}	 — —	 V V	
V_{IL}	Input low voltage • 2.7 V ≤ V_{DD} ≤ 3.6 V • 1.7 V ≤ V_{DD} ≤ 2.7 V	 — —	 0.35 × V_{DD} 0.3 × V_{DD}	 V V	
V_{HYS}	Input hysteresis	0.06 × V_{DD}	—	V	
I_{ICIO}	IO pin negative DC injection current — single pin • V_{IN} < V_{SS}-0.3V	-3	—	mA	1
I_{ICcont}	Contiguous pin DC injection current —regional limit, includes sum of negative injection currents of 16 contiguous pins • Negative current injection	-25	—	mA	
V_{ODPU}	Open drain pullup voltage level	V_{DD}	V_{DD}	V	2
V_{RAM}	V_{DD} voltage required to retain RAM	1.2	—	V	

1. All I/O pins are internally clamped to V_{SS} through a ESD protection diode. There is no diode connection to V_{DD}. If V_{IN} greater than V_{IO_MIN} (= V_{SS}-0.3 V) is observed, then there is no need to provide current limiting resistors at the pads. If this limit cannot be observed then a current limiting resistor is required. The negative DC injection current limiting resistor is calculated as $R = (V_{IO_MIN} - V_{IN})/|I_{ICIO}|$.
2. Open drain outputs must be pulled to V_{DD}.

2.2.2 LVD and POR operating requirements

Table 6. V_{DD} supply LVD and POR operating requirements

Symbol	Description	Min.	Typ.	Max.	Unit	Notes
V_{POR}	Falling V_{DD} POR detect voltage	0.8	1.1	1.5	V	—
V_{LVDH}	Falling low-voltage detect threshold — high range (LVDV = 01)	2.48	2.56	2.64	V	—
	Low-voltage warning thresholds — high range					1

Table continues on the next page...

Table 6. V_{DD} supply LVD and POR operating requirements (continued)

Symbol	Description	Min.	Typ.	Max.	Unit	Notes
V_{LVW1H}	• Level 1 falling (LVWV = 00)	2.62	2.70	2.78	V	
V_{LVW2H}	• Level 2 falling (LVWV = 01)	2.72	2.80	2.88	V	
V_{LVW3H}	• Level 3 falling (LVWV = 10)	2.82	2.90	2.98	V	
V_{LVW4H}	• Level 4 falling (LVWV = 11)	2.92	3.00	3.08	V	
V_{HYSH}	Low-voltage inhibit reset/recover hysteresis — high range	—	±60	—	mV	—
V_{LVDL}	Falling low-voltage detect threshold — low range (LVDV=00)	1.54	1.60	1.66	V	—
	Low-voltage warning thresholds — low range					1
V_{LVW1L}	• Level 1 falling (LVWV = 00)	1.74	1.80	1.86	V	
V_{LVW2L}	• Level 2 falling (LVWV = 01)	1.84	1.90	1.96	V	
V_{LVW3L}	• Level 3 falling (LVWV = 10)	1.94	2.00	2.06	V	
V_{LVW4L}	• Level 4 falling (LVWV = 11)	2.04	2.10	2.16	V	
V_{HYSL}	Low-voltage inhibit reset/recover hysteresis — low range	—	±40	—	mV	—
V_{BG}	Bandgap voltage reference	0.97	1.00	1.03	V	—
t_{LPO}	Internal low power oscillator period — factory trimmed	900	1000	1100	μs	—

1. Rising thresholds are falling threshold + hysteresis voltage

2.2.3 Voltage and current operating behaviors

Table 7. Voltage and current operating behaviors

Symbol	Description	Min.	Max.	Unit	Notes
V_{OH}	Output high voltage — normal drive pad				1
	• 2.7 V ≤ V_{DD} ≤ 3.6 V, I_{OH} = –5 mA	V_{DD} – 0.5	—	V	
	• 1.71 V ≤ V_{DD} ≤ 2.7 V, I_{OH} = –1.5 mA	V_{DD} – 0.5	—	V	
V_{OH}	Output high voltage — high drive pad				1
	• 2.7 V ≤ V_{DD} ≤ 3.6 V, I_{OH} = –18 mA	V_{DD} – 0.5	—	V	
	• 1.71 V ≤ V_{DD} ≤ 2.7 V, I_{OH} = –6 mA	V_{DD} – 0.5	—	V	
I_{OHT}	Output high current total for all ports	—	100	mA	
V_{OL}	Output low voltage — normal drive pad				1
	• 2.7 V ≤ V_{DD} ≤ 3.6 V, I_{OL} = 5 mA	—	0.5	V	
	• 1.71 V ≤ V_{DD} ≤ 2.7 V, I_{OL} = 1.5 mA	—	0.5	V	
V_{OL}	Output low voltage — high drive pad				1
		—	0.5	V	

Table continues on the next page...

Table 7. Voltage and current operating behaviors (continued)

Symbol	Description	Min.	Max.	Unit	Notes
	• 2.7 V ≤ V_{DD} ≤ 3.6 V, I_{OL} = 18 mA • 1.71 V ≤ V_{DD} ≤ 2.7 V, I_{OL} = 6 mA	—	0.5	V	
I_{OLT}	Output low current total for all ports	—	100	mA	
I_{IN}	Input leakage current (per pin) for full temperature range	—	1	μA	2
I_{IN}	Input leakage current (per pin) at 25 °C	—	0.025	μA	2
I_{IN}	Input leakage current (total all pins) for full temperature range	—	64	μA	2
I_{OZ}	Hi-Z (off-state) leakage current (per pin)	—	1	μA	
R_{PU}	Internal pullup resistors	20	50	kΩ	3

1. PTB0, PTB1, PTC3, PTC4, PTD6, and PTD7 I/O have both high drive and normal drive capability selected by the associated PTx_PCRn[DSE] control bit. All other GPIOs are normal drive only.
2. Measured at V_{DD} = 3.6 V
3. Measured at V_{DD} supply voltage = V_{DD} min and Vinput = V_{SS}

2.2.4 Power mode transition operating behaviors

All specifications except t_{POR} and VLLSx→RUN recovery times in the following table assume this clock configuration:

- CPU and system clocks = 48 MHz
- Bus and flash clock = 24 MHz
- HIRC clock mode

Table 8. Power mode transition operating behaviors

Symbol	Description	Min.	Typ.	Max.	Unit	Notes
t_{POR}	After a POR event, amount of time from the point V_{DD} reaches 1.8 V to execution of the first instruction across the operating temperature range of the chip.	—	—	300	μs	1
	• VLLS0 → RUN	—	152	166	μs	
	• VLLS1 → RUN	—	152	166	μs	
	• VLLS3 → RUN	—	93	104	μs	
	• LLS → RUN	—	7.5	8	μs	

Table continues on the next page...

Table 8. Power mode transition operating behaviors (continued)

Symbol	Description	Min.	Typ.	Max.	Unit	Notes
	• VLPS → RUN	—	7.5	8	μs	
	• STOP → RUN	—	7.5	8	μs	

1. Normal boot (FTFA_FOPT[LPBOOT]=11)

2.2.5 Power consumption operating behaviors

The maximum values stated in the following table represent characterized results equivalent to the mean plus three times the standard deviation (mean + 3 sigma).

NOTE

The while (1) test is executed with flash cache enabled.

NOTE

The data at 105 °C are for QFN, LQFP and MAPBGA packages only.

Table 9. Power consumption operating behaviors

Symbol	Description	Min.	Typ.	Max.	Unit	Notes
I_{DDA}	Analog supply current	—	—	See note	mA	1
I_{DD_RUNCO}	Running CoreMark in flash in compute operation mode—48M HIRC mode, 48 MHz core / 24 MHz flash, V_{DD} = 3.0 V					2
	• at 25 °C	—	5.76	6.40	mA	
	• at 105 °C	—	6.04	6.68		
I_{DD_RUNCO}	Running While(1) loop in flash in compute operation mode—48M HIRC mode, 48 MHz core / 24 MHz flash, V_{DD} = 3.0 V					
	• at 25 °C	—	3.21	3.85	mA	
	• at 105 °C	—	3.49	4.13		
I_{DD_RUN}	Run mode current—48M HIRC mode, running CoreMark in Flash all peripheral clock disable 48 MHz core/24 MHz flash, V_{DD} = 3.0 V					2
	• at 25 °C	—	6.45	7.09	mA	
	• at 105 °C	—	6.75	7.39		
I_{DD_RUN}	Run mode current—48M HIRC mode, running CoreMark in flash all peripheral clock disable, 24 MHz core/12 MHz flash, V_{DD} = 3.0 V					2

Table continues on the next page...

Table 9. Power consumption operating behaviors (continued)

Symbol	Description	Min.	Typ.	Max.	Unit	Notes
	• at 25 °C • at 105 °C	— —	3.95 4.23	4.59 4.87	mA	
I_{DD_RUN}	Run mode current—48M HIRC mode, running CoreMark in Flash all peripheral clock disable 12 MHz core/6 MHz flash, V_{DD} = 3.0 V • at 25 °C • at 105 °C	— —	2.68 2.96	3.32 3.60	mA	2
I_{DD_RUN}	Run mode current—48M HIRC mode, running CoreMark in Flash all peripheral clock enable 48 MHz core/24 MHz flash, V_{DD} = 3.0 V • at 25 °C • at 105 °C	— —	8.08 8.39	8.72 9.03	mA	2
I_{DD_RUN}	Run mode current—48M HIRC mode, running While(1) loop in flash all peripheral clock disable, 48 MHz core/24 MHz flash, V_{DD} = 3.0 V • at 25 °C • at 105 °C	— —	3.90 4.21	4.54 4.85	mA	
I_{DD_RUN}	Run mode current—48M HIRC mode, running While(1) loop in Flash all peripheral clock disable, 24 MHz core/12 MHz flash, V_{DD} = 3.0 V • at 25 °C • at 105 °C	— —	2.66 2.94	3.30 3.58	mA	
I_{DD_RUN}	Run mode current—48M HIRC mode, Running While(1) loop in Flash all peripheral clock disable, 12 MHz core/6 MHz flash, V_{DD} = 3.0 V • at 25 °C • at 105 °C	— —	2.03 2.31	2.67 2.95	mA	
I_{DD_RUN}	Run mode current—48M HIRC mode, Running While(1) loop in Flash all peripheral clock enable, 48 MHz core/24 MHz flash, V_{DD} = 3.0 V • at 25 °C • at 105 °C	— —	5.52 5.83	6.16 6.47	mA	
I_{DD_RUN}	Run mode current—48M HIRC mode, running While(1) loop in SRAM all peripheral clock disable, 48 MHz core/24 MHz flash, V_{DD} = 3.0 V • at 25 °C • at 105 °C	— —	5.29 5.56	5.93 6.20	mA	
I_{DD_RUN}	Run mode current—48M HIRC mode, running While(1) loop in SRAM all peripheral clock enable, 48 MHz core/24 MHz flash, V_{DD} = 3.0 V	— —	6.91 7.19	7.55 7.91	mA	

Table continues on the next page...

Table 9. Power consumption operating behaviors (continued)

Symbol	Description	Min.	Typ.	Max.	Unit	Notes
	• at 25 °C • at 105 °C					
I_{DD_VLPRCO}	Very Low Power Run Core Mark in Flash in Compute Operation mode: Core@4MHz, Flash @1MHz, V_{DD} = 3.0 V • at 25 °C	—	826	907	μA	
I_{DD_VLPRCO}	Very-low-power-run While(1) loop in SRAM in compute operation mode— 8 MHz LIRC mode, 4 MHz core / 1 MHz flash, V_{DD} = 3.0 V • at 25 °C	—	405	486	μA	
I_{DD_VLPRCO}	Very-low-power run While(1) loop in SRAM in compute operation mode:—2 MHz LIRC mode, 2 MHz core / 0.5 MHz flash, V_{DD} = 3.0 V • at 25 °C	—	154	235	μA	
I_{DD_VLPR}	Very-low-power run mode current— 2 MHz LIRC mode, While(1) loop in flash all peripheral clock disable, 2 MHz core / 0.5 MHz flash, V_{DD} = 3.0 V • at 25 °C	—	108	189	μA	
I_{DD_VLPR}	Very-low-power run mode current— 2 MHz LIRC mode, While(1) loop in flash all peripheral clock disable, 125 kHz core / 31.25 kHz flash, V_{DD} = 3.0 V • at 25 °C	—	39	120	μA	
I_{DD_VLPR}	Very-low-power run mode current— 8 MHz LIRC mode, While(1) loop in flash all peripheral clock disable, 4 MHz core / 1 MHz flash, V_{DD} = 3.0 V • at 25 °C	—	249	330	μA	
I_{DD_VLPR}	Very-low-power run mode current— 8 MHz LIRC mode, While(1) loop in flash all peripheral clock enable, 4 MHz core / 1 MHz flash, V_{DD} = 3.0 V • at 25 °C	—	337	418	μA	
I_{DD_VLPR}	Very-low-power run mode current— 8 MHz LIRC mode, While(1) loop in SRAM in all peripheral clock disable, 4 MHz core / 1 MHz flash, V_{DD} = 3.0 V • at 25 °C	—	416	497	μA	
I_{DD_VLPR}	Very-low-power run mode current— 8 MHz LIRC mode, While(1) loop in SRAM all peripheral clock enable, 4 MHz core / 1 MHz flash, V_{DD} = 3.0 V • at 25 °C	—	494	575	μA	
I_{DD_VLPR}	Very-low-power run mode current—2 MHz LIRC mode, While(1) loop in SRAM in all peripheral clock disable, 2 MHz core / 0.5 MHz flash, V_{DD} = 3.0 V • at 25 °C	—	166	247	μA	
I_{DD_VLPR}	Very-low-power run mode current—2 MHz LIRC mode, While(1) loop in SRAM all peripheral clock					

Table continues on the next page...

Table 9. Power consumption operating behaviors (continued)

Symbol	Description	Min.	Typ.	Max.	Unit	Notes
	disable, 125 kHz core / 31.25 kHz flash, V_{DD} = 3.0 V • at 25 °C	—	50	131	μA	
I_{DD_VLPR}	Very-low-power run mode current—2 MHz LIRC mode, While(1) loop in SRAM all peripheral clock enable, 2 MHz core / 0.5 MHz flash, V_{DD} = 3.0 V • at 25 °C	—	208	289	μA	
I_{DD_WAIT}	Wait mode current—core disabled, 48 MHz system/24 MHz bus, flash disabled (flash doze enabled), all peripheral clocks disabled, MCG_Lite under HIRC mode, V_{DD} = 3.0 V	—	1.81	1.89	mA	
I_{DD_WAIT}	Wait mode current—core disabled, 24 MHz system/12 MHz bus, flash disabled (flash doze enabled), all peripheral clocks disabled, MCG_Lite under HIRC mode, V_{DD} = 3.0 V	—	1.22	1.39	mA	
I_{DD_VLPW}	Very-low-power wait mode current, core disabled, 4 MHz system/ 1 MHz bus and flash, all peripheral clocks disabled, V_{DD} = 3.0 V	—	172	182	μA	
I_{DD_VLPW}	Very-low-power wait mode current, core disabled, 2 MHz system/ 0.5 MHz bus and flash, all peripheral clocks disabled, V_{DD} = 3.0 V	—	69	76	μA	
I_{DD_VLPW}	Very-low-power wait mode current, core disabled, 125 kHz system/ 31.25 kHz bus and flash, all peripheral clocks disabled, V_{DD} = 3.0 V	—	36	40	μA	
I_{DD_PSTOP2}	Partial Stop 2, core and system clock disabled, 12 MHz bus and flash, V_{DD} = 3.0 V	—	1.81	2.06	mA	
I_{DD_PSTOP2}	Partial Stop 2, core and system clock disabled, flash doze enabled, 12 MHz bus, V_{DD} = 3.0 V	—	1.00	1.25	mA	
I_{DD_STOP}	Stop mode current at 3.0 V • at 25 °C and below • at 50 °C • at 85 °C • at 105 °C	 — — — —	 161.93 181.45 236.29 390.33	 171.82 191.96 271.17 465.58	μA	
I_{DD_VLPS}	Very-low-power stop mode current at 3.0 V • at 25 °C and below • at 50 °C • at 85 °C • at 105 °C	 — — — —	 3.31 10.43 34.14 104.38	 5.14 17.68 61.06 164.44	μA	
I_{DD_VLPS}	Very-low-power stop mode current at 1.8 V • at 25 °C and below	—	3.21	5.22		

Table continues on the next page...

Table 9. Power consumption operating behaviors (continued)

Symbol	Description	Min.	Typ.	Max.	Unit	Notes
	• at 50 °C • at 85 °C • at 105 °C	— — —	10.26 33.49 102.92	17.62 60.19 162.20	μA	
I_{DD_LLS}	Low-leakage stop mode current, all peripheral disable, at 3.0 V • at 25 °C and below • at 50 °C • at 70 °C • at 85 °C • at 105 °C	— — — — —	2.06 4.72 8.13 13.34 41.08	3.33 6.85 13.30 24.70 52.43	μA	
I_{DD_LLS}	Low-leakage stop mode current with RTC current, at 3.0 V • at 25 °C and below • at 50 °C • at 70 °C • at 85 °C • at 105 °C	— — — — —	2.46 5.12 8.53 13.74 41.48	3.73 7.25 11.78 18.91 52.83	μA	
I_{DD_LLS}	Low-leakage stop mode current with RTC current, at 1.8 V • at 25 °C and below • at 50 °C • at 70 °C • at 85 °C • at 105 °C	— — — — —	2.35 4.91 8.32 13.44 40.47	2.70 6.75 11.78 18.21 51.85	μA	3
I_{DD_VLLS3}	Very-low-leakage stop mode 3 current, all peripheral disable, at 3.0 V • at 25 °C and below • at 50 °C • at 70 °C • at 85 °C • at 105 °C	— — — — —	1.45 3.37 5.76 9.72 30.41	1.85 4.39 8.48 14.30 37.50	μA	
I_{DD_VLLS3}	Very-low-leakage stop mode 3 current with RTC current, at 3.0 V • at 25 °C and below • at 50 °C • at 70 °C • at 85 °C • at 105 °C	— — — — —	2.05 3.97 6.36 10.32 31.01	2.45 4.99 9.08 14.73 38.10	μA	3

Table continues on the next page...

Table 9. Power consumption operating behaviors (continued)

Symbol	Description	Min.	Typ.	Max.	Unit	Notes
I_{DD_VLLS3}	Very-low-leakage stop mode 3 current with RTC current, at 1.8 V • at 25 °C and below • at 50 °C • at 70 °C • at 85 °C • at 105 °C	 — — — — —	 1.96 3.86 6.23 10.21 30.25	 2.36 5.67 8.53 13.37 37.02	μA	3
I_{DD_VLLS1}	Very-low-leakage stop mode 1 current all peripheral disabled at 3.0 V • at 25 °C and below • at 50°C • at 70°C • at 85°C • at 105 °C	 — — — — —	 0.66 1.78 2.55 4.83 16.42	 0.80 3.87 4.26 6.64 20.49	μA	
I_{DD_VLLS1}	Very-low-leakage stop mode 1 current RTC enabled at 3.0 V • at 25 °C and below • at 50°C • at 70°C • at 85°C • at 105 °C	 — — — — —	 1.26 2.38 3.15 5.43 17.02	 1.40 4.47 4.86 7.24 21.09	μA	3
I_{DD_VLLS1}	Very-low-leakage stop mode 1 current RTC enabled at 1.8 V • at 25 °C and below • at 50°C • at 70°C • at 85°C • at 105 °C	 — — — — —	 1.16 1.96 2.78 4.85 15.78	 1.30 2.28 3.37 6.88 18.81	μA	3
I_{DD_VLLS0}	Very-low-leakage stop mode 0 current all peripheral disabled (SMC_STOPCTRL[PORPO] = 0) at 3.0 V • at 25 °C and below • at 50 °C • at 70 °C • at 85 °C • at 105 °C	 — — — — —	 0.35 1.25 2.53 4.40 16.09	 0.47 1.44 3.24 5.24 19.29	μA	
I_{DD_VLLS0}	Very-low-leakage stop mode 0 current all peripheral disabled (SMC_STOPCTRL[PORPO] = 1) at 3 V					

Table 9. Power consumption operating behaviors

Symbol	Description	Min.	Typ.	Max.	Unit	Notes
	• at 25 °C and below	—	0.18	0.28	μA	
	• at 50 °C	—	1.09	1.31		
	• at 70 °C	—	2.25	2.94		
	• at 85 °C	—	4.25	5.10		
	• at 105 °C	—	15.95	19.10		

1. The analog supply current is the sum of the active or disabled current for each of the analog modules on the device. See each module's specification for its supply current.
2. MCG_Lite configured for HIRC mode. CoreMark benchmark compiled using IAR 7.10 with optimization level high, optimized for balanced.
3. RTC uses external 32 kHz crystal as clock source, and the current includes ERCLK32K power consumption.

Table 10. Low power mode peripheral adders — typical value

Symbol	Description	Temperature (°C)						Unit
		-40	25	50	70	85	105	
$I_{IRC8MHz}$	8 MHz internal reference clock (IRC) adder. Measured by entering STOP or VLPS mode with 8 MHz IRC enabled, MCG_SC[FCRDIV]=000b, MCG_MC[LIRC_DIV2]=000b.	93	93	93	93	93	93	μA
$I_{IRC2MHz}$	2 MHz internal reference clock (IRC) adder. Measured by entering STOP mode with the 2 MHz IRC enabled, MCG_SC[FCRDIV]=000b, MCG_MC[LIRC_DIV2]=000b.	29	29	29	29	29	29	μA
$I_{EREFSTEN4MHz}$	External 4 MHz crystal clock adder. Measured by entering STOP or VLPS mode with the crystal enabled.	206	224	230	238	245	253	μA
$I_{EREFSTEN32KHz}$	External 32 kHz crystal clock adder by means of the OSC0_CR[EREFSTEN and EREFSTEN] bits. Measured by entering all modes with the crystal enabled.							nA
	• VLLS1	440	490	540	560	570	580	
	• VLLS3	440	490	540	560	570	580	
	• LLS	490	490	540	560	570	680	
	• VLPS	510	560	560	560	610	680	
	• STOP	510	560	560	560	610	680	
I_{LPTMR}	LPTMR peripheral adder measured by placing the device in VLLS1 mode with LPTMR enabled using LPO.	30	30	30	85	100	200	

Table continues on the next page...

Table 10. Low power mode peripheral adders — typical value (continued)

Symbol	Description	Temperature (°C)						Unit
		-40	25	50	70	85	105	
								nA
I_{CMP}	CMP peripheral adder measured by placing the device in VLLS1 mode with CMP enabled using the 6-bit DAC and a single external input for compare. Includes 6-bit DAC power consumption.	22	22	22	22	22	22	μA
I_{UART}	UART peripheral adder measured by placing the device in STOP or VLPS mode with selected clock source waiting for RX data at 115200 baud rate. Includes selected clock source power consumption. • IRC8M (8 MHz internal reference clock) • IRC2M (2 MHz internal reference clock)	114 34	114 34	114 34	114 34	114 34	114 34	μA
I_{TPM}	TPM peripheral adder measured by placing the device in STOP or VLPS mode with selected clock source configured for output compare generating 100 Hz clock signal. No load is placed on the I/O generating the clock signal. Includes selected clock source and I/O switching currents. • IRC8M (8 MHz internal reference clock) • IRC2M (2 MHz internal reference clock)	147 42	147 42	147 42	147 42	147 42	147 42	μA
I_{BG}	Bandgap adder when BGEN bit is set and device is placed in VLPx or VLLSx mode.	45	45	45	45	45	45	μA
I_{ADC}	ADC peripheral adder combining the measured values at V_{DD} and V_{DDA} by placing the device in STOP or VLPS mode. ADC is configured for low power mode using the internal clock and continuous conversions.	330	330	330	330	330	330	μA

2.2.5.1 Diagram: Typical IDD_RUN operating behavior

The following data was measured under these conditions:

- MCG-Lite in HIRC for run mode, and LIRC for VLPR mode
- No GPIOs toggled
- Code execution from flash
- For the ALLOFF curve, all peripheral clocks are disabled except FTFA

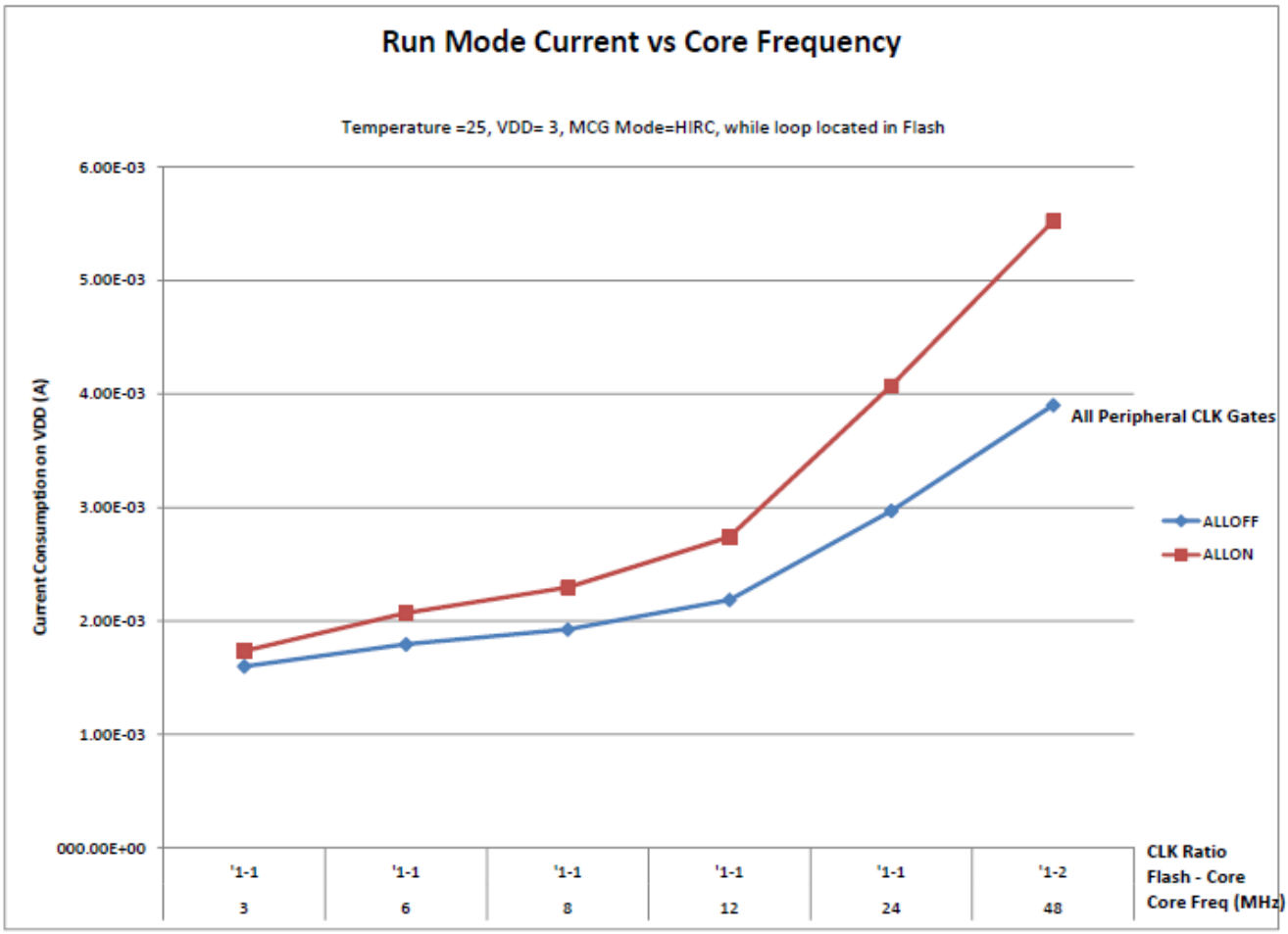

Figure 2. Run mode supply current vs. core frequency

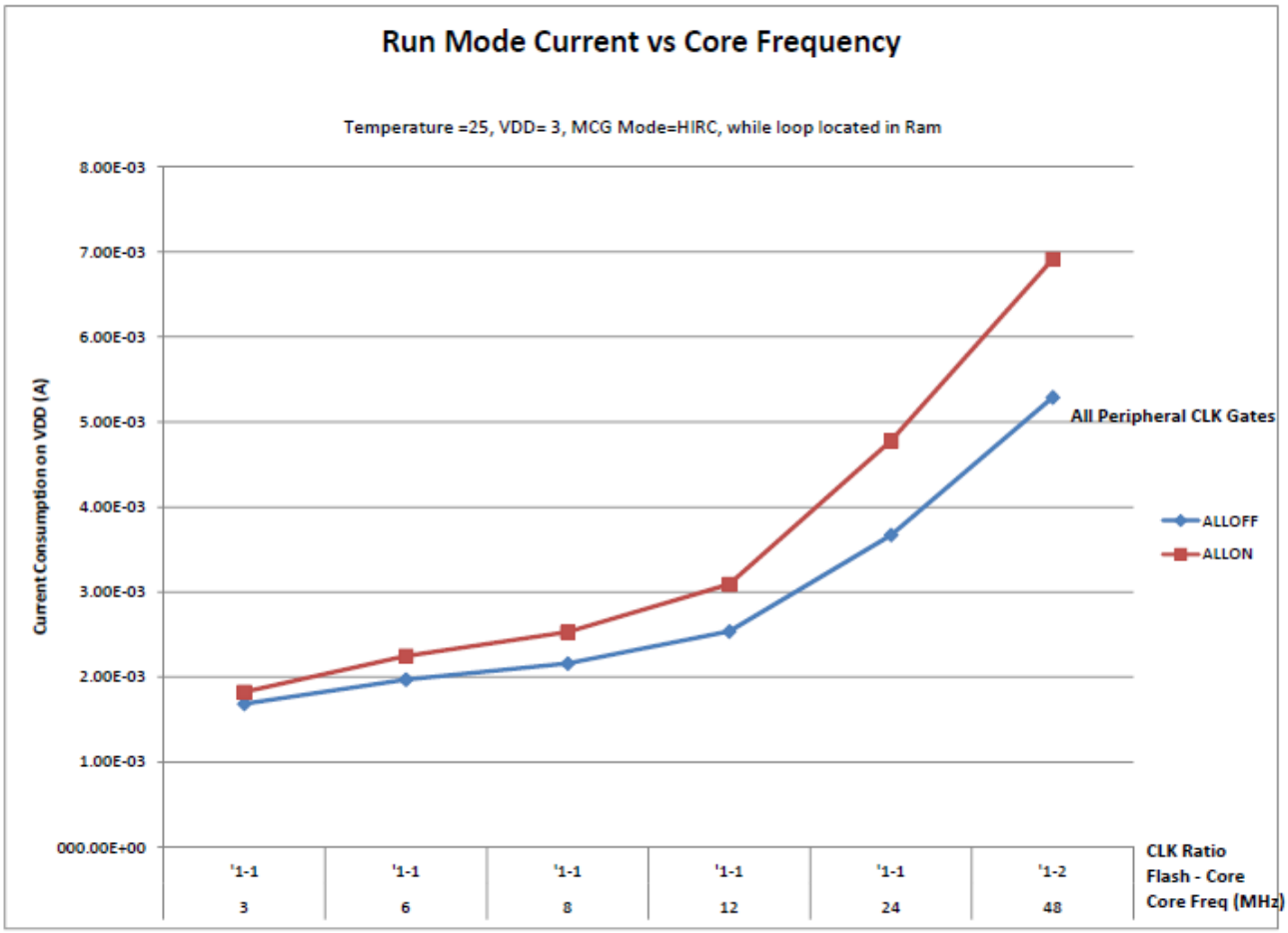
Run Mode Current vs Core Frequency
Temperature =25, VDD= 3, MCG Mode=HIRC, while loop located in Ram
Current Consumption on VDD (A)
8.00E-03
7.00E-03
6.00E-03
5.00E-03
4.00E-03
3.00E-03
2.00E-03
1.00E-03
000.00E+00
All Peripheral CLK Gates
ALLOFF
ALLON
'1-1
3
'1-1
6
'1-1
8
'1-1
12
'1-1
24
'1-2
48
CLK Ratio
Flash - Core
Core Freq (MHz)

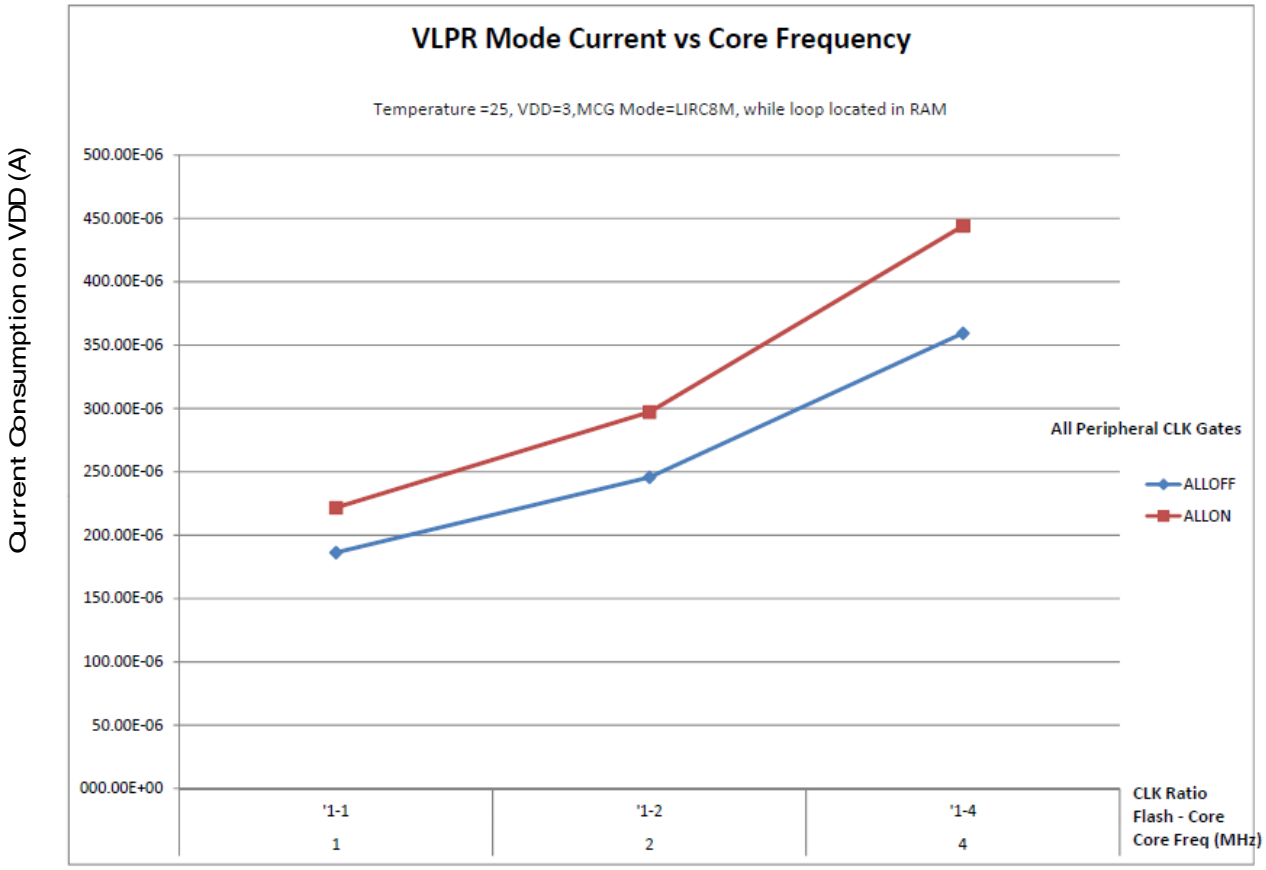

Figure 3. VLPR mode current vs. core frequency

2.2.6 EMC radiated emissions operating behaviors

Table 11. EMC radiated emissions operating behaviors for 64-pin LQFP package

Symbol	Description	Frequency band (MHz)	Typ.	Unit	Notes
V_{RE1}	Radiated emissions voltage, band 1	0.15–50	11	dBμV	1, 2
V_{RE2}	Radiated emissions voltage, band 2	50–150	12	dBμV	
V_{RE3}	Radiated emissions voltage, band 3	150–500	10	dBμV	
V_{RE4}	Radiated emissions voltage, band 4	500–1000	6	dBμV	
V_{RE_IEC}	IEC level	0.15–1000	N	—	2, 3

1. Determined according to IEC Standard 61967-1, *Integrated Circuits - Measurement of Electromagnetic Emissions, 150 kHz to 1 GHz Part 1: General Conditions and Definitions* and IEC Standard 61967-2, *Integrated Circuits - Measurement*

of Electromagnetic Emissions, 150 kHz to 1 GHz Part 2: Measurement of Radiated Emissions—TEM Cell and Wideband TEM Cell Method. Measurements were made while the microcontroller was running basic application code. The reported emission level is the value of the maximum measured emission, rounded up to the next whole number, from among the measured orientations in each frequency range.

2. V_{DD} = 3.3 V, T_A = 25 °C, f_{OSC} = IRC48M, f_{SYS} = 48 MHz, f_{BUS} = 24 MHz
3. Specified according to Annex D of IEC Standard 61967-2, *Measurement of Radiated Emissions—TEM Cell and Wideband TEM Cell Method*

2.2.7 Designing with radiated emissions in mind

To find application notes that provide guidance on designing your system to minimize interference from radiated emissions:

1. Go to www.freescale.com.
2. Perform a keyword search for "EMC design."

2.2.8 Capacitance attributes

Table 12. Capacitance attributes

Symbol	Description	Min.	Max.	Unit
C_{IN}	Input capacitance	—	7	pF

2.3 Switching specifications

2.3.1 Device clock specifications

Table 13. Device clock specifications

Symbol	Description	Min.	Max.	Unit
Normal run mode				
f_{SYS}	System and core clock[1]	—	48	MHz
f_{BUS}	Bus clock[1]	—	24	MHz
f_{FLASH}	Flash clock[1]	—	24	MHz
f_{LPTMR}	LPTMR clock	—	24	MHz
VLPR and VLPS modes[2]				
f_{SYS}	System and core clock	—	4	MHz
f_{BUS}	Bus clock	—	1	MHz
f_{FLASH}	Flash clock	—	1	MHz
f_{LPTMR}	LPTMR clock[3]	—	24	MHz

Table continues on the next page...

Table 13. Device clock specifications (continued)

Symbol	Description	Min.	Max.	Unit
f_{LPTMR_ERCLK}	LPTMR external reference clock	—	16	MHz
$f_{osc_hi_2}$	Oscillator crystal or resonator frequency — high frequency mode (high range) (MCG_C2[RANGE]=1x)	—	16	MHz
f_{TPM}	TPM asynchronous clock	—	8	MHz
$f_{LPUART0/1}$	LPUART0/1 asynchronous clock	—	8	MHz

1. The maximum value of system clock, core clock, bus clock, and flash clock under normal run mode can be 3% higher than the specified maximum frequency when IRC 48MHz is used as the clock source.
2. The frequency limitations in VLPR and VLPS modes here override any frequency specification listed in the timing specification for any other module. These same frequency limits apply to VLPS, whether VLPS was entered from RUN or from VLPR.
3. The LPTMR can be clocked at this speed in VLPR or VLPS only when the source is an external pin.

2.3.2 General switching specifications

These general-purpose specifications apply to all signals configured for GPIO and UART signals.

Table 14. General switching specifications

Description	Min.	Max.	Unit	Notes
GPIO pin interrupt pulse width (digital glitch filter disabled) — Synchronous path	1.5	—	Bus clock cycles	1
External RESET and NMI pin interrupt pulse width — Asynchronous path	100	—	ns	2
GPIO pin interrupt pulse width — Asynchronous path	16	—	ns	2
Port rise and fall time	—	36	ns	3

1. The synchronous and asynchronous timing must be met.
2. This is the shortest pulse that is guaranteed to be recognized.
3. 75 pF load

2.4 Thermal specifications

2.4.1 Thermal operating requirements

Table 15. Thermal operating requirements for WLCSP package

Symbol	Description	Min.	Max.	Unit	Notes
T_J	Die junction temperature	–40	95	°C	
T_A	Ambient temperature	–40	85	°C	1

1. Maximum T_A can be exceeded only if the user ensures that T_J does not exceed the maximum. The simplest method to determine T_J is: $T_J = T_A + R_{\theta JA} \times$ chip power dissipation.

Table 16. Thermal operating requirements for other packages

Symbol	Description	Min.	Max.	Unit	Notes
T_J	Die junction temperature	–40	125	°C	
T_A	Ambient temperature	–40	105	°C	1

1. Maximum T_A can be exceeded only if the user ensures that T_J does not exceed the maximum. The simplest method to determine T_J is: $T_J = T_A + R_{\theta JA} \times$ chip power dissipation.

2.4.2 Thermal attributes

Table 17. Thermal attributes

Board type	Symbol	Description	48 QFN	32 QFN	64 LQFP	64 MAPBGA	36 WLCSP	Unit	Notes
Single-layer (1S)	$R_{\theta JA}$	Thermal resistance, junction to ambient (natural convection)	86	101	70	50.3	77.6	°C/W	1
Four-layer (2s2p)	$R_{\theta JA}$	Thermal resistance, junction to ambient (natural convection)	29	33	51	42.9	38.9	°C/W	
Single-layer (1S)	$R_{\theta JMA}$	Thermal resistance, junction to ambient (200 ft./min. air speed)	71	84	58	41.4	69.6	°C/W	
Four-layer (2s2p)	$R_{\theta JMA}$	Thermal resistance, junction to ambient (200 ft./min. air speed)	24	28	45	38.0	35.6	°C/W	
—	$R_{\theta JB}$	Thermal resistance, junction to board	12	13	33	39.6	34.8	°C/W	2
—	$R_{\theta JC}$	Thermal resistance, junction to case	1.7	1.7	20	27.3	0.37	°C/W	3
—	Ψ_{JT}	Thermal characterization parameter, junction to package top outside center (natural convection)	2	3	4	0.4	0.2	°C/W	4
—	Ψ_{JB}	Thermal characterization parameter, junction to package bottom (natural convection)	-	-	-	12.6	-	°C/W	5

1. Determined according to JEDEC Standard JESD51-2, *Integrated Circuits Thermal Test Method Environmental Conditions—Natural Convection (Still Air)*, or EIA/JEDEC Standard JESD51-6, *Integrated Circuit Thermal Test Method Environmental Conditions—Forced Convection (Moving Air)*.
2. Determined according to JEDEC Standard JESD51-8, *Integrated Circuit Thermal Test Method Environmental Conditions—Junction-to-Board*.

3. Determined according to Method 1012.1 of MIL-STD 883, *Test Method Standard, Microcircuits*, with the cold plate temperature used for the case temperature. The value includes the thermal resistance of the interface material between the top of the package and the cold plate.
4. Determined according to JEDEC Standard JESD51-2, *Integrated Circuits Thermal Test Method Environmental Conditions—Natural Convection (Still Air)*.
5. Thermal characterization parameter indicating the temperature difference between package bottom center and the junction temperature per JEDEC JESD51-12. When Greek letters are not available, the thermal characterization parameter is written as Psi-JB.

3 Peripheral operating requirements and behaviors

3.1 Core modules

3.1.1 SWD electricals

Table 18. SWD full voltage range electricals

Symbol	Description	Min.	Max.	Unit
	Operating voltage	1.71	3.6	V
J1	SWD_CLK frequency of operation • Serial wire debug	0	25	MHz
J2	SWD_CLK cycle period	1/J1	—	ns
J3	SWD_CLK clock pulse width • Serial wire debug	20	—	ns
J4	SWD_CLK rise and fall times	—	3	ns
J9	SWD_DIO input data setup time to SWD_CLK rise	10	—	ns
J10	SWD_DIO input data hold time after SWD_CLK rise	0	—	ns
J11	SWD_CLK high to SWD_DIO data valid	—	32	ns
J12	SWD_CLK high to SWD_DIO high-Z	5	—	ns

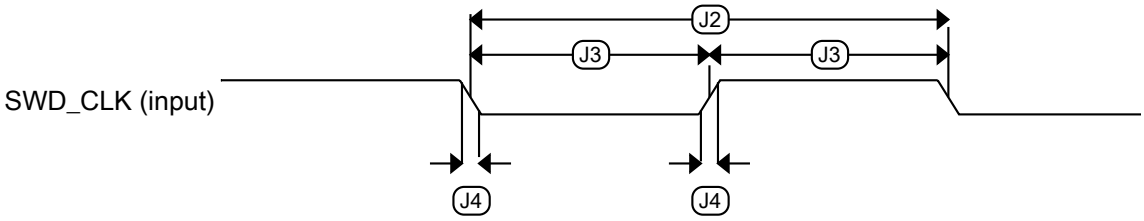

Figure 4. Serial wire clock input timing

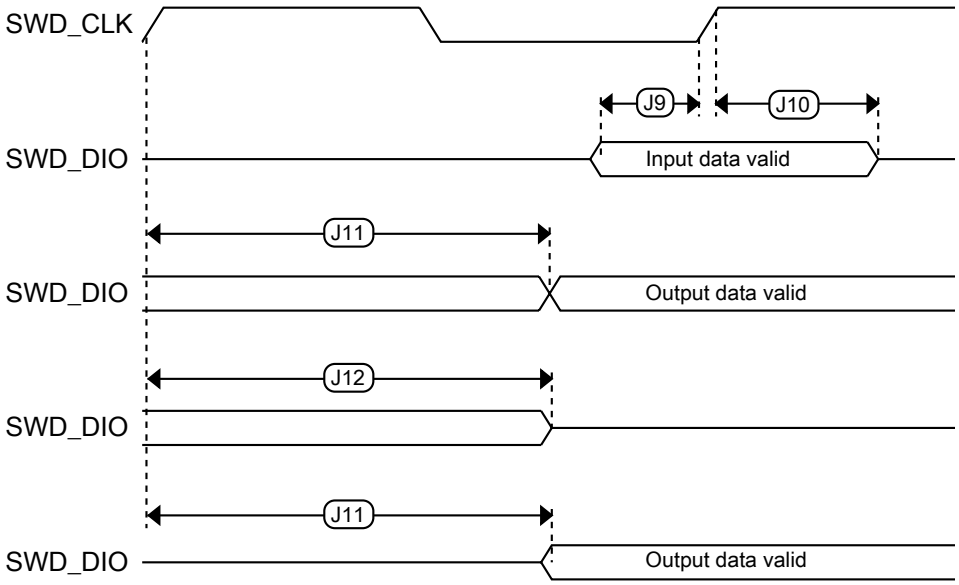

Figure 5. Serial wire data timing

3.2 System modules

There are no specifications necessary for the device's system modules.

3.3 Clock modules

3.3.1 MCG-Lite specifications

Table 19. IRC48M specification

Symbol	Description	Min.	Typ.	Max.	Unit	Notes
I_{DD}	Supply current	—	400	500	μA	—
f_{IRC}	Output frequency	—	48	—	MHz	—
$\Delta f_{irc48m_ol_lv}$	Open loop total deviation of IRC48M frequency at low voltage (VDD=1.71V-1.89V) over temperature	—	± 0.5	± 1.5	$\%f_{irc48m}$	1
$\Delta f_{irc48m_ol_hv}$	Open loop total deviation of IRC48M frequency at high voltage (VDD=1.89V-3.6V) over temperature	—	± 0.5	± 1.0	$\%f_{irc48m}$	1

Table continues on the next page...

Table 19. IRC48M specification (continued)

Symbol	Description	Min.	Typ.	Max.	Unit	Notes
T_j	Period jitter (RMS)	—	35	150	ps	—
T_{su}	Startup time	—	2	3	μs	—

1. The maximum value represents characterized results equivalent to mean plus or minus three times the standard deviation (mean +/-3sigma).

Table 20. IRC8M/2M specification

Symbol	Description	Min.	Typ.	Max.	Unit	Notes
I_{DD_2M}	Supply current in 2 MHz mode	—	14	17	μA	—
I_{DD_8M}	Supply current in 8 MHz mode	—	30	35	μA	—
f_{IRC_2M}	Output frequency	—	2	—	MHz	—
f_{IRC_8M}	Output frequency	—	8	—	MHz	—
$f_{IRC_T_2M}$	Output frequency range (trimmed)	—	—	±3	$\%f_{IRC}$	—
$f_{IRC_T_8M}$	Output frequency range (trimmed)	—	—	±3	$\%f_{IRC}$	—
T_{su_2M}	Startup time	—	—	12.5	μs	—
T_{su_8M}	Startup time	—	—	12.5	μs	—

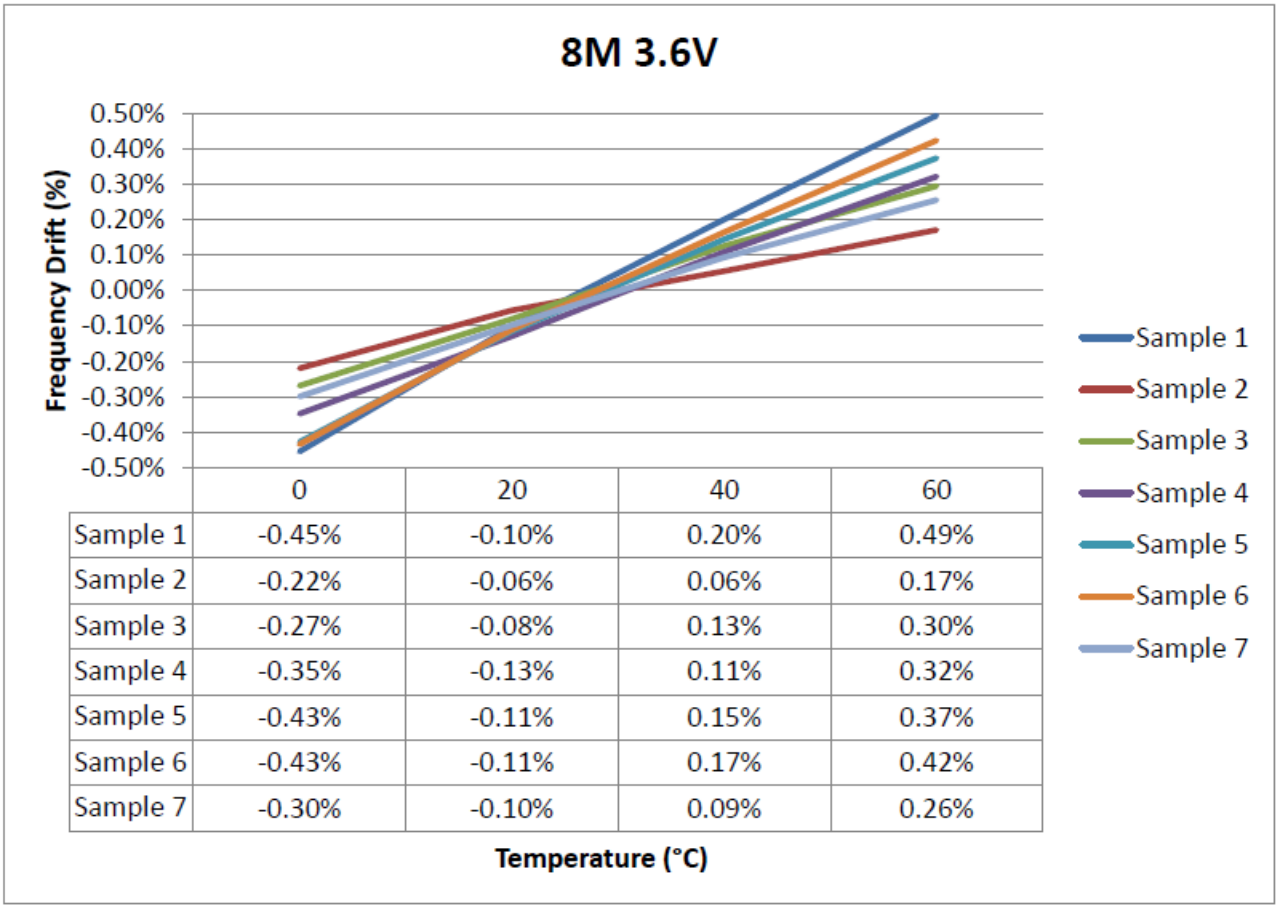

	0	20	40	60
Sample 1	-0.45%	-0.10%	0.20%	0.49%
Sample 2	-0.22%	-0.06%	0.06%	0.17%
Sample 3	-0.27%	-0.08%	0.13%	0.30%
Sample 4	-0.35%	-0.13%	0.11%	0.32%
Sample 5	-0.43%	-0.11%	0.15%	0.37%
Sample 6	-0.43%	-0.11%	0.17%	0.42%
Sample 7	-0.30%	-0.10%	0.09%	0.26%

Figure 6. IRC8M Frequency Drift vs Temperature curve

3.3.2 Oscillator electrical specifications

3.3.2.1 Oscillator DC electrical specifications

Table 21. Oscillator DC electrical specifications

Symbol	Description	Min.	Typ.	Max.	Unit	Notes
V_{DD}	Supply voltage	1.71	—	3.6	V	
I_{DDOSC}	Supply current — low-power mode (HGO=0)					1
	• 32 kHz	—	500	—	nA	
	• 4 MHz	—	200	—	μA	
	• 8 MHz (RANGE=01)	—	300	—	μA	
	• 16 MHz	—	950	—	μA	
		—	1.2	—	mA	

Table continues on the next page...

Table 21. Oscillator DC electrical specifications (continued)

Symbol	Description	Min.	Typ.	Max.	Unit	Notes
	• 24 MHz • 32 MHz	—	1.5	—	mA	
I_{DDOSC}	Supply current — high gain mode (HGO=1)					1
	• 32 kHz	—	25	—	μA	
	• 4 MHz	—	400	—	μA	
	• 8 MHz (RANGE=01)	—	500	—	μA	
	• 16 MHz	—	2.5	—	mA	
	• 24 MHz	—	3	—	mA	
	• 32 MHz	—	4	—	mA	
C_x	EXTAL load capacitance	—	—	—		2, 3
C_y	XTAL load capacitance	—	—	—		2, 3
R_F	Feedback resistor — low-frequency, low-power mode (HGO=0)	—	—	—	MΩ	2, 4
	Feedback resistor — low-frequency, high-gain mode (HGO=1)	—	10	—	MΩ	
	Feedback resistor — high-frequency, low-power mode (HGO=0)	—	—	—	MΩ	
	Feedback resistor — high-frequency, high-gain mode (HGO=1)	—	1	—	MΩ	
R_S	Series resistor — low-frequency, low-power mode (HGO=0)	—	—	—	kΩ	
	Series resistor — low-frequency, high-gain mode (HGO=1)	—	200	—	kΩ	
	Series resistor — high-frequency, low-power mode (HGO=0)	—	—	—	kΩ	
	Series resistor — high-frequency, high-gain mode (HGO=1)	—	0	—	kΩ	
V_{pp}[5]	Peak-to-peak amplitude of oscillation (oscillator mode) — low-frequency, low-power mode (HGO=0)	—	0.6	—	V	
	Peak-to-peak amplitude of oscillation (oscillator mode) — low-frequency, high-gain mode (HGO=1)	—	V_{DD}	—	V	
	Peak-to-peak amplitude of oscillation (oscillator mode) — high-frequency, low-power mode (HGO=0)	—	0.6	—	V	
	Peak-to-peak amplitude of oscillation (oscillator mode) — high-frequency, high-gain mode (HGO=1)	—	V_{DD}	—	V	

1. V_{DD}=3.3 V, Temperature =25 °C
2. See crystal or resonator manufacturer's recommendation

3. C_x,C_y can be provided by using the integrated capacitors when the low frequency oscillator (RANGE = 00) is used. For all other cases external capacitors must be used.
4. When low power mode is selected, R_F is integrated and must not be attached externally.
5. The EXTAL and XTAL pins should only be connected to required oscillator components and must not be connected to any other devices.

3.3.2.2 Oscillator frequency specifications

Table 22. Oscillator frequency specifications

Symbol	Description	Min.	Typ.	Max.	Unit	Notes
f_{osc_lo}	Oscillator crystal or resonator frequency — low-frequency mode (MCG_C2[RANGE]=00)	32	—	40	kHz	
$f_{osc_hi_1}$	Oscillator crystal or resonator frequency — high-frequency mode (low range) (MCG_C2[RANGE]=01)	3	—	8	MHz	
$f_{osc_hi_2}$	Oscillator crystal or resonator frequency — high frequency mode (high range) (MCG_C2[RANGE]=1x)	8	—	32	MHz	
f_{ec_extal}	Input clock frequency (external clock mode)	—	—	48	MHz	1, 2
t_{dc_extal}	Input clock duty cycle (external clock mode)	40	50	60	%	
t_{cst}	Crystal startup time — 32 kHz low-frequency, low-power mode (HGO=0)	—	750	—	ms	3, 4
	Crystal startup time — 32 kHz low-frequency, high-gain mode (HGO=1)	—	250	—	ms	
	Crystal startup time — 8 MHz high-frequency (MCG_C2[RANGE]=01), low-power mode (HGO=0)	—	0.6	—	ms	
	Crystal startup time — 8 MHz high-frequency (MCG_C2[RANGE]=01), high-gain mode (HGO=1)	—	1	—	ms	

1. Other frequency limits may apply when external clock is being used as a reference for the FLL
2. When transitioning from FEI or FBI to FBE mode, restrict the frequency of the input clock so that, when it is divided by FRDIV, it remains within the limits of the DCO input clock frequency.
3. Proper PC board layout procedures must be followed to achieve specifications.
4. Crystal startup time is defined as the time between the oscillator being enabled and the OSCINIT bit in the MCG_S register being set.

3.4 Memories and memory interfaces

3.4.1 Flash electrical specifications

This section describes the electrical characteristics of the flash memory module.

3.4.1.1 Flash timing specifications — program and erase

The following specifications represent the amount of time the internal charge pumps are active and do not include command overhead.

Table 23. NVM program/erase timing specifications

Symbol	Description	Min.	Typ.	Max.	Unit	Notes
t_{hvpgm4}	Longword Program high-voltage time	—	7.5	18	μs	—
$t_{hversscr}$	Sector Erase high-voltage time	—	13	113	ms	1
$t_{hversblk128k}$	Erase Block high-voltage time for 128 KB	—	52	452	ms	1

1. Maximum time based on expectations at cycling end-of-life.

3.4.1.2 Flash timing specifications — commands

Table 24. Flash command timing specifications

Symbol	Description	Min.	Typ.	Max.	Unit	Notes
$t_{rd1blk128k}$	Read 1s Block execution time • 128 KB program flash	—	—	1.7	ms	1
$t_{rd1sec1k}$	Read 1s Section execution time (flash sector)	—	—	60	μs	1
t_{pgmchk}	Program Check execution time	—	—	45	μs	1
t_{rdrsrc}	Read Resource execution time	—	—	30	μs	1
t_{pgm4}	Program Longword execution time	—	65	145	μs	—
$t_{ersblk128k}$	Erase Flash Block execution time • 128 KB program flash	—	88	600	ms	2
t_{ersscr}	Erase Flash Sector execution time	—	14	114	ms	2
t_{rd1all}	Read 1s All Blocks execution time	—	—	1.8	ms	1
t_{rdonce}	Read Once execution time	—	—	25	μs	1
$t_{pgmonce}$	Program Once execution time	—	65	—	μs	—
t_{ersall}	Erase All Blocks execution time	—	175	1300	ms	2
t_{vfykey}	Verify Backdoor Access Key execution time	—	—	30	μs	1
$t_{ersallu}$	Erase All Blocks Unsecure execution time	—	175	1300	ms	2

1. Assumes 25 MHz flash clock frequency.
2. Maximum times for erase parameters based on expectations at cycling end-of-life.

3.4.1.3 Flash high voltage current behaviors

Table 25. Flash high voltage current behaviors

Symbol	Description	Min.	Typ.	Max.	Unit
I_{DD_PGM}	Average current adder during high voltage flash programming operation	—	2.5	6.0	mA
I_{DD_ERS}	Average current adder during high voltage flash erase operation	—	1.5	4.0	mA

3.4.1.4 Reliability specifications

Table 26. NVM reliability specifications

Symbol	Description	Min.	Typ.[1]	Max.	Unit	Notes
Program Flash						
$t_{nvmretp10k}$	Data retention after up to 10 K cycles	5	50	—	years	—
$t_{nvmretp1k}$	Data retention after up to 1 K cycles	20	100	—	years	—
$n_{nvmcycp}$	Cycling endurance	10 K	50 K	—	cycles	2

1. Typical data retention values are based on measured response accelerated at high temperature and derated to a constant 25 °C use profile. Engineering Bulletin EB618 does not apply to this technology. Typical endurance defined in Engineering Bulletin EB619.
2. Cycling endurance represents number of program/erase cycles at –40 °C ≤ T_j ≤ 125 °C.

3.5 Security and integrity modules

There are no specifications necessary for the device's security and integrity modules.

3.6 Analog

3.6.1 ADC electrical specifications

Using differential inputs can achieve better system accuracy than using single-end inputs.

3.6.1.1 16-bit ADC operating conditions

Table 27. 16-bit ADC operating conditions

Symbol	Description	Conditions	Min.	Typ.[1]	Max.	Unit	Notes
V_{DDA}	Supply voltage	Absolute	1.71	—	3.6	V	—
ΔV_{DDA}	Supply voltage	Delta to V_{DD} ($V_{DD} – V_{DDA}$)	-100	0	+100	mV	2
ΔV_{SSA}	Ground voltage	Delta to V_{SS} ($V_{SS} – V_{SSA}$)	-100	0	+100	mV	2
V_{REFH}	ADC reference voltage high		1.13	V_{DDA}	V_{DDA}	V	3
V_{REFL}	ADC reference voltage low		V_{SSA}	V_{SSA}	V_{SSA}	V	3
V_{ADIN}	Input voltage	• 16-bit differential mode • All other modes	VREFL VREFL	— —	31/32 × VREFH VREFH	V	—
C_{ADIN}	Input capacitance	• 16-bit mode • 8-bit / 10-bit / 12-bit modes	— —	8 4	10 5	pF	—
R_{ADIN}	Input series resistance		—	2	5	kΩ	—
R_{AS}	Analog source resistance (external)	13-bit / 12-bit modes f_{ADCK} < 4 MHz	—	—	5	kΩ	4
f_{ADCK}	ADC conversion clock frequency	≤ 13-bit mode	1.0	—	24	MHz	5
f_{ADCK}	ADC conversion clock frequency	16-bit mode	2.0	—	12.0	MHz	5
C_{rate}	ADC conversion rate	≤ 13-bit modes No ADC hardware averaging Continuous conversions enabled, subsequent conversion time	20.000	—	1200	ksps	6
C_{rate}	ADC conversion rate	16-bit mode No ADC hardware averaging Continuous conversions enabled, subsequent conversion time	37.037	—	461.467	ksps	6

1. Typical values assume V_{DDA} = 3.0 V, Temp = 25 °C, f_{ADCK} = 1.0 MHz, unless otherwise stated. Typical values are for reference only, and are not tested in production.
2. DC potential difference.
3. VREFH can act as VREF_OUT when VREFV1 module is enabled.
4. This resistance is external to MCU. To achieve the best results, the analog source resistance must be kept as low as possible. The results in this data sheet were derived from a system that had < 8 Ω analog source resistance. The R_{AS}/C_{AS} time constant should be kept to < 1 ns.
5. To use the maximum ADC conversion clock frequency, CFG2[ADHSC] must be set and CFG1[ADLPC] must be clear.
6. For guidelines and examples of conversion rate calculation, download the ADC calculator tool.

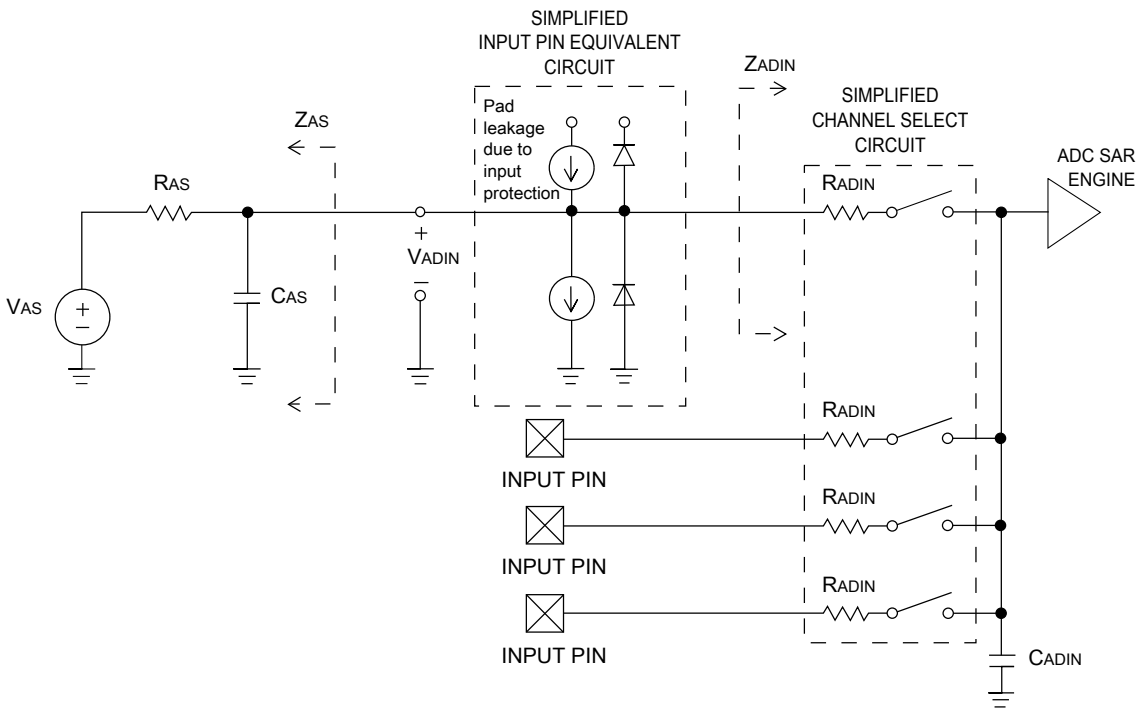

Figure 7. ADC input impedance equivalency diagram

3.6.1.2 16-bit ADC electrical characteristics

Table 28. 16-bit ADC characteristics ($V_{REFH} = V_{DDA}$, $V_{REFL} = V_{SSA}$)

Symbol	Description	Conditions[1]	Min.	Typ.[2]	Max.	Unit	Notes
I_{DDA_ADC}	Supply current		0.215	—	1.7	mA	3
f_{ADACK}	ADC asynchronous clock source	• ADLPC = 1, ADHSC = 0	1.2	2.4	3.9	MHz	$t_{ADACK} = 1/f_{ADACK}$
		• ADLPC = 1, ADHSC = 1	2.4	4.0	6.1	MHz	
		• ADLPC = 0, ADHSC = 0	3.0	5.2	7.3	MHz	
		• ADLPC = 0, ADHSC = 1	4.4	6.2	9.5	MHz	
	Sample Time	See Reference Manual chapter for sample times					
TUE	Total unadjusted error	• 12-bit modes	—	±4	±6.8	LSB[4]	5
		• <12-bit modes	—	±1.4	±2.1		
DNL	Differential non-linearity	• 12-bit modes	—	±0.7	–1.1 to +1.9	LSB[4]	5
		• <12-bit modes	—	±0.2	–0.3 to 0.5		
INL	Integral non-linearity	• 12-bit modes	—	±1.0	–2.7 to +1.9	LSB[4]	5

Table continues on the next page...

Table 28. 16-bit ADC characteristics ($V_{REFH} = V_{DDA}$, $V_{REFL} = V_{SSA}$) (continued)

Symbol	Description	Conditions[1]	Min.	Typ.[2]	Max.	Unit	Notes
		• <12-bit modes	—	±0.5	–0.7 to +0.5		
E_{FS}	Full-scale error	• 12-bit modes • <12-bit modes	— —	–4 –1.4	–5.4 –1.8	LSB[4]	$V_{ADIN} = V_{DDA}$[5]
E_Q	Quantization error	• 16-bit modes • ≤13-bit modes	— —	–1 to 0 —	— ±0.5	LSB[4]	
ENOB	Effective number of bits	16-bit differential mode • Avg = 32 • Avg = 4 16-bit single-ended mode • Avg = 32 • Avg = 4	 12.8 11.9 12.2 11.4	 14.5 13.8 13.9 13.1	 — — — —	 bits bits bits bits	6
SINAD	Signal-to-noise plus distortion	See ENOB	6.02 × ENOB + 1.76			dB	
THD	Total harmonic distortion	16-bit differential mode • Avg = 32 16-bit single-ended mode • Avg = 32	 — —	 -94 -85	 — —	dB dB	7
SFDR	Spurious free dynamic range	16-bit differential mode • Avg = 32 16-bit single-ended mode • Avg = 32	 82 78	 95 90	 — —	 dB dB	7
E_{IL}	Input leakage error		$I_{In} \times R_{AS}$			mV	I_{In} = leakage current (refer to the MCU's voltage and current operating ratings)
	Temp sensor slope	Across the full temperature range of the device	1.55	1.62	1.69	mV/°C	8
V_{TEMP25}	Temp sensor voltage	25 °C	706	716	726	mV	8

1. All accuracy numbers assume the ADC is calibrated with $V_{REFH} = V_{DDA}$
2. Typical values assume V_{DDA} = 3.0 V, Temp = 25 °C, f_{ADCK} = 2.0 MHz unless otherwise stated. Typical values are for reference only and are not tested in production.

3. The ADC supply current depends on the ADC conversion clock speed, conversion rate and ADC_CFG1[ADLPC] (low power). For lowest power operation, ADC_CFG1[ADLPC] must be set, the ADC_CFG2[ADHSC] bit must be clear with 1 MHz ADC conversion clock speed.
4. 1 LSB = $(V_{REFH} - V_{REFL})/2^N$
5. ADC conversion clock < 16 MHz, Max hardware averaging (AVGE = %1, AVGS = %11)
6. Input data is 100 Hz sine wave. ADC conversion clock < 12 MHz.
7. Input data is 1 kHz sine wave. ADC conversion clock < 12 MHz.
8. ADC conversion clock < 3 MHz

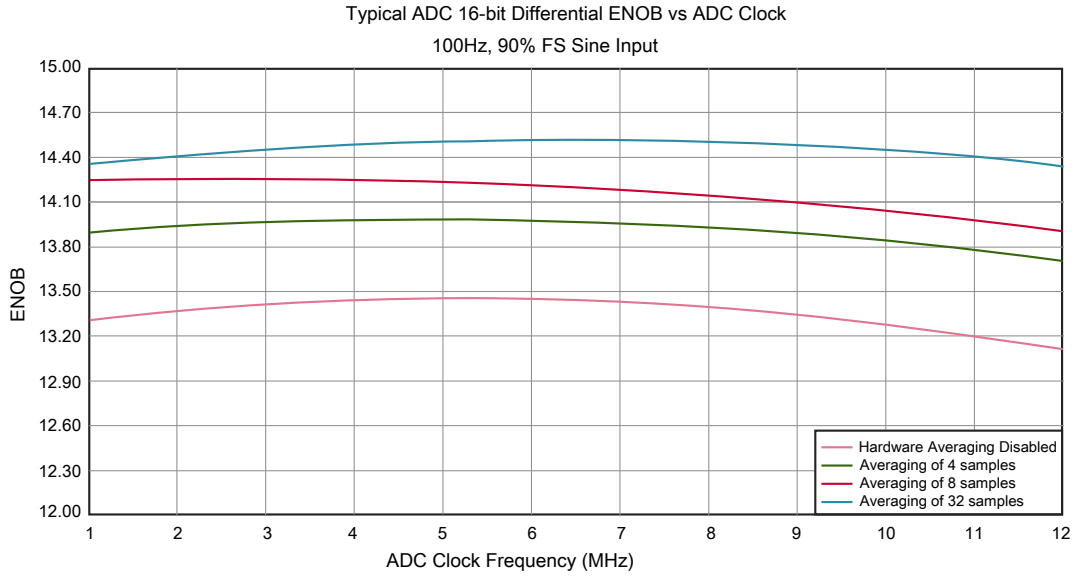

Figure 8. Typical ENOB vs. ADC_CLK for 16-bit differential mode

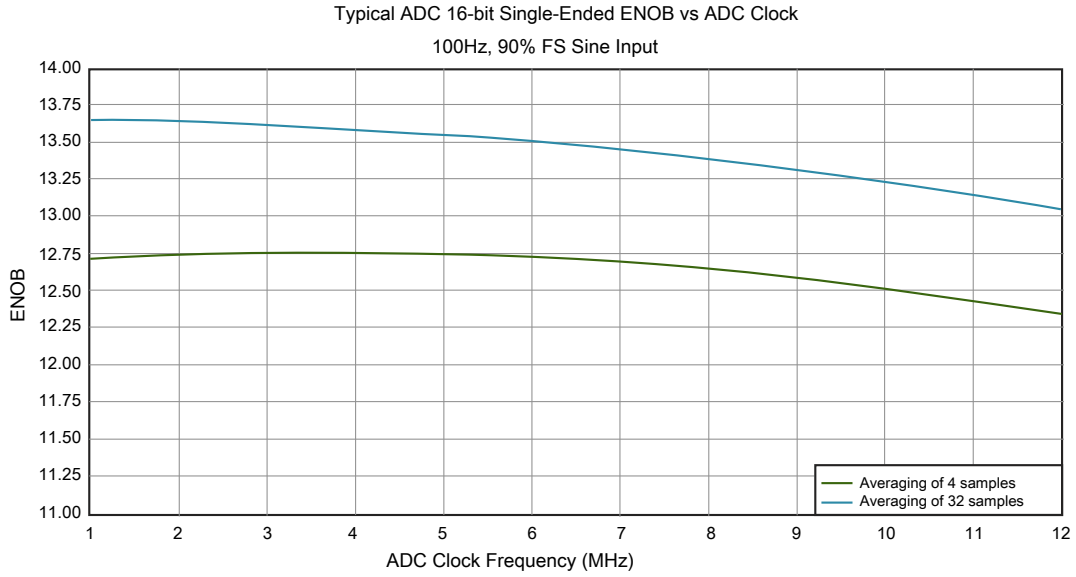

Figure 9. Typical ENOB vs. ADC_CLK for 16-bit single-ended mode

3.6.2 Voltage reference electrical specifications

Table 29. VREF full-range operating requirements

Symbol	Description	Min.	Max.	Unit	Notes
V_{DDA}	Supply voltage		3.6	V	
T_A	Temperature	Operating temperature range of the device		°C	
C_L	Output load capacitance	100		nF	1, 2

1. C_L must be connected to VREF_OUT if the VREF_OUT functionality is being used for either an internal or external reference.
2. The load capacitance should not exceed +/-25% of the nominal specified C_L value over the operating temperature range of the device.

Table 30 is tested under the condition of setting VREF_TRM[CHOPEN], VREF_SC[REGEN] and VREF_SC[ICOMPEN] bits to 1.

Table 30. VREF full-range operating behaviors

Symbol	Description	Min.	Typ.	Max.	Unit	Notes
V_{out}	Voltage reference output with factory trim at nominal V_{DDA} and temperature=25C	1.1915	1.195	1.1977	V	1
V_{out}	Voltage reference output — factory trim	1.1584	—	1.2376	V	1
V_{out}	Voltage reference output — user trim	1.193	—	1.197	V	1
V_{step}	Voltage reference trim step	—	0.5	—	mV	1
V_{tdrift}	Temperature drift (Vmax -Vmin across the full temperature range: 0 to 70°C)	—	—	50	mV	1
I_{bg}	Bandgap only current	—	—	80	μA	1
I_{lp}	Low-power buffer current	—	—	360	uA	1
I_{hp}	High-power buffer current	—	—	1	mA	1
ΔV_{LOAD}	Load regulation • current = ± 1.0 mA	— —	 200	 —	μV	1, 2
T_{stup}	Buffer startup time	—	—	100	μs	
$T_{chop_osc_stup}$	Internal bandgap start-up delay with chop oscillator enabled	—	—	35	ms	—
V_{vdrift}	Voltage drift (Vmax -Vmin across the full voltage range)	—	2	—	mV	1

1. See the chip's Reference Manual for the appropriate settings of the VREF Status and Control register.
2. Load regulation voltage is the difference between the VREF_OUT voltage with no load vs. voltage with defined load

Table 31. VREF limited-range operating requirements

Symbol	Description	Min.	Max.	Unit	Notes
T_A	Temperature	0	50	°C	

Table 32. VREF limited-range operating behaviors

Symbol	Description	Min.	Max.	Unit	Notes
V_{out}	Voltage reference output with factory trim	1.173	1.225	V	

3.6.3 CMP and 6-bit DAC electrical specifications

Table 33. Comparator and 6-bit DAC electrical specifications

Symbol	Description	Min.	Typ.	Max.	Unit
V_{DD}	Supply voltage	1.71	—	3.6	V
I_{DDHS}	Supply current, High-speed mode (EN=1, PMODE=1)	—	—	200	μA
I_{DDLS}	Supply current, low-speed mode (EN=1, PMODE=0)	—	—	20	μA
V_{AIN}	Analog input voltage	V_{SS} – 0.3	—	V_{DD}	V
V_{AIO}	Analog input offset voltage	—	—	20	mV
V_H	Analog comparator hysteresis[1]				
	• CR0[HYSTCTR] = 00	—	5	—	mV
	• CR0[HYSTCTR] = 01	—	10	—	mV
	• CR0[HYSTCTR] = 10	—	20	—	mV
	• CR0[HYSTCTR] = 11	—	30	—	mV
V_{CMPOh}	Output high	V_{DD} – 0.5	—	—	V
V_{CMPOl}	Output low	—	—	0.5	V
t_{DHS}	Propagation delay, high-speed mode (EN=1, PMODE=1)	20	50	200	ns
t_{DLS}	Propagation delay, low-speed mode (EN=1, PMODE=0)	80	250	600	ns
	Analog comparator initialization delay[2]	—	—	40	μs
I_{DAC6b}	6-bit DAC current adder (enabled)	—	7	—	μA
INL	6-bit DAC integral non-linearity	–0.5	—	0.5	LSB[3]
DNL	6-bit DAC differential non-linearity	–0.3	—	0.3	LSB

1. Typical hysteresis is measured with input voltage range limited to 0.6 to V_{DD}–0.6 V.
2. Comparator initialization delay is defined as the time between software writes to change control inputs (Writes to CMP_DACCR[DACEN], CMP_DACCR[VRSEL], CMP_DACCR[VOSEL], CMP_MUXCR[PSEL], and CMP_MUXCR[MSEL]) and the comparator output settling to a stable level.
3. 1 LSB = $V_{reference}/64$

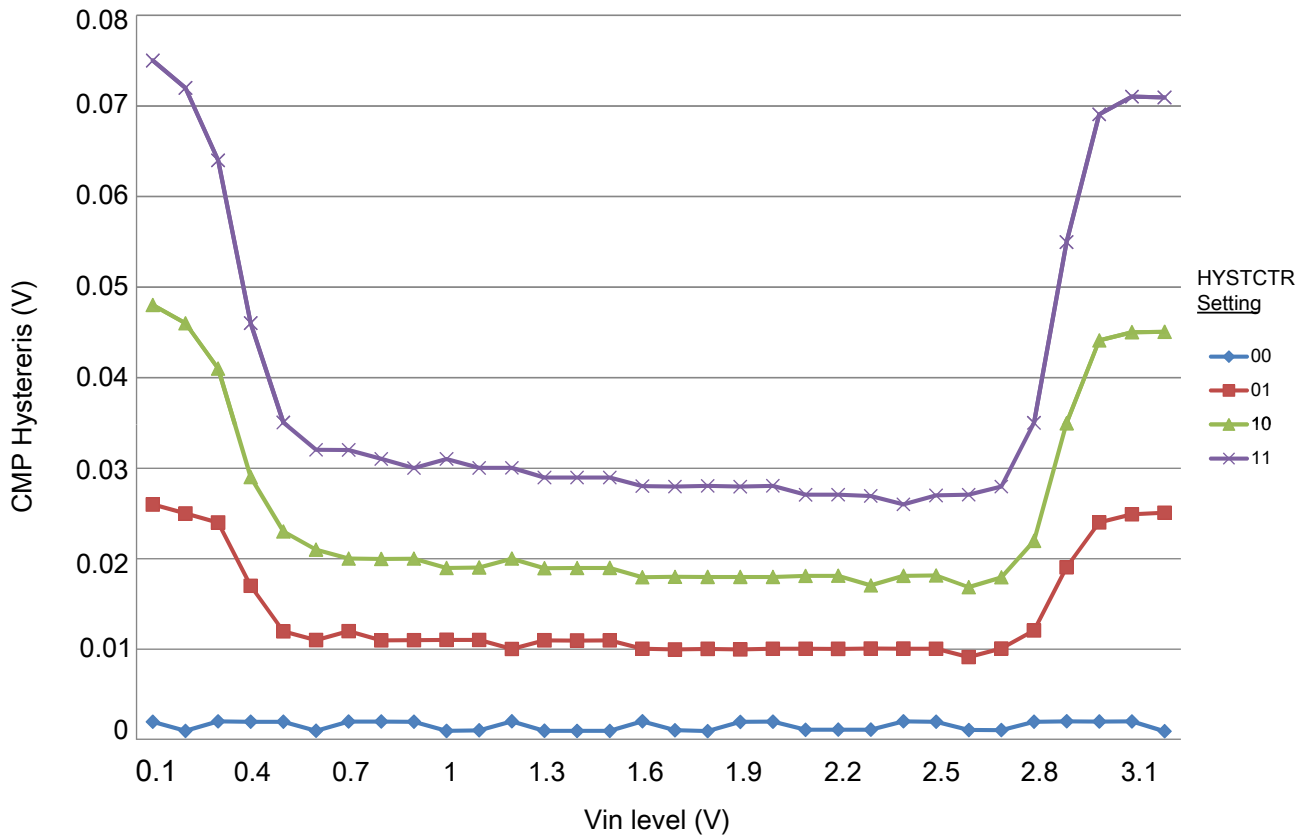

Figure 10. Typical hysteresis vs. Vin level (VDD = 3.3 V, PMODE = 0)

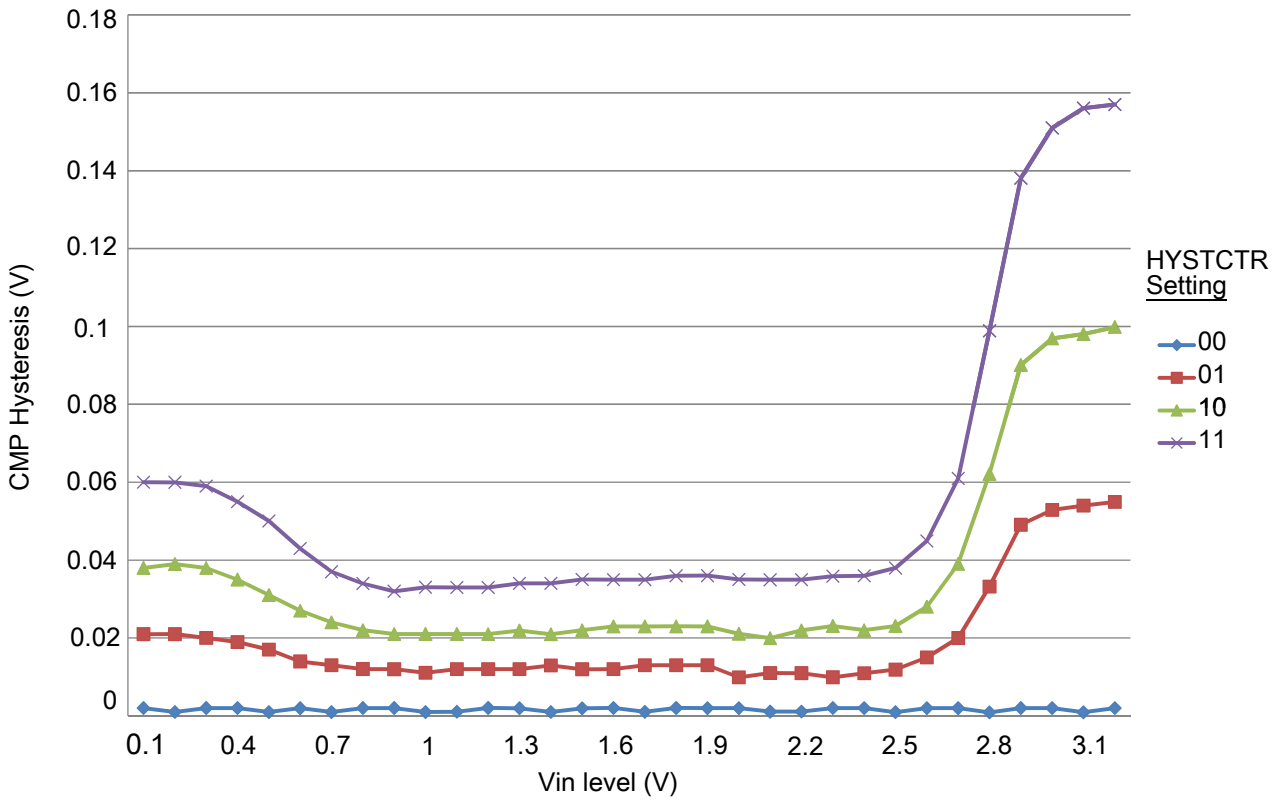

Figure 11. Typical hysteresis vs. Vin level (VDD = 3.3 V, PMODE = 1)

3.6.4 12-bit DAC electrical characteristics

3.6.4.1 12-bit DAC operating requirements

Table 34. 12-bit DAC operating requirements

Symbol	Desciption	Min.	Max.	Unit	Notes
V_{DDA}	Supply voltage		3.6	V	
V_{DACR}	Reference voltage	1.13	3.6	V	1
C_L	Output load capacitance	—	100	pF	2
I_L	Output load current	—	1	mA	

1. The DAC reference can be selected to be V_{DDA} or V_{REFH}.
2. A small load capacitance (47 pF) can improve the bandwidth performance of the DAC.

3.6.4.2 12-bit DAC operating behaviors

Table 35. 12-bit DAC operating behaviors

Symbol	Description	Min.	Typ.	Max.	Unit	Notes
I_{DDA_DACLP}	Supply current — low-power mode	—	—	250	μA	
I_{DDA_DACHP}	Supply current — high-speed mode	—	—	900	μA	
t_{DACLP}	Full-scale settling time (0x080 to 0xF7F) — low-power mode	—	100	200	μs	1
t_{DACHP}	Full-scale settling time (0x080 to 0xF7F) — high-power mode	—	15	30	μs	1
$t_{CCDACLP}$	Code-to-code settling time (0xBF8 to 0xC08) — low-power mode and high-speed mode	—	0.7	1	μs	1
$V_{dacoutl}$	DAC output voltage range low — high-speed mode, no load, DAC set to 0x000	—	—	100	mV	
$V_{dacouth}$	DAC output voltage range high — high-speed mode, no load, DAC set to 0xFFF	V_{DACR} −100	—	V_{DACR}	mV	
INL	Integral non-linearity error — high speed mode	—	—	±8	LSB	2
DNL	Differential non-linearity error — V_{DACR} > 2 V	—	—	±1	LSB	3
DNL	Differential non-linearity error — V_{DACR} = VREF_OUT	—	—	±1	LSB	4
V_{OFFSET}	Offset error	—	±0.4	±0.8	%FSR	5
E_G	Gain error	—	±0.1	±0.6	%FSR	5
PSRR	Power supply rejection ratio, V_{DDA} ≥ 2.4 V	60	—	90	dB	
T_{CO}	Temperature coefficient offset voltage	—	3.7	—	μV/C	6
T_{GE}	Temperature coefficient gain error	—	0.000421	—	%FSR/C	
Rop	Output resistance (load = 3 kΩ)	—	—	250	Ω	
SR	Slew rate -80h→ F7Fh→ 80h • High power (SP_{HP}) • Low power (SP_{LP})	 1.2 0.05	 1.7 0.12	 — —	V/μs	
BW	3dB bandwidth • High power (SP_{HP}) • Low power (SP_{LP})	 550 40	 — —	 — —	kHz	

1. Settling within ±1 LSB
2. The INL is measured for 0 + 100 mV to V_{DACR} −100 mV
3. The DNL is measured for 0 + 100 mV to V_{DACR} −100 mV
4. The DNL is measured for 0 + 100 mV to V_{DACR} −100 mV with V_{DDA} > 2.4 V
5. Calculated by a best fit curve from V_{SS} + 100 mV to V_{DACR} − 100 mV
6. V_{DDA} = 3.0 V, reference select set for V_{DDA} (DACx_CO:DACRFS = 1), high power mode (DACx_C0:LPEN = 0), DAC set to 0x800, temperature range is across the full range of the device

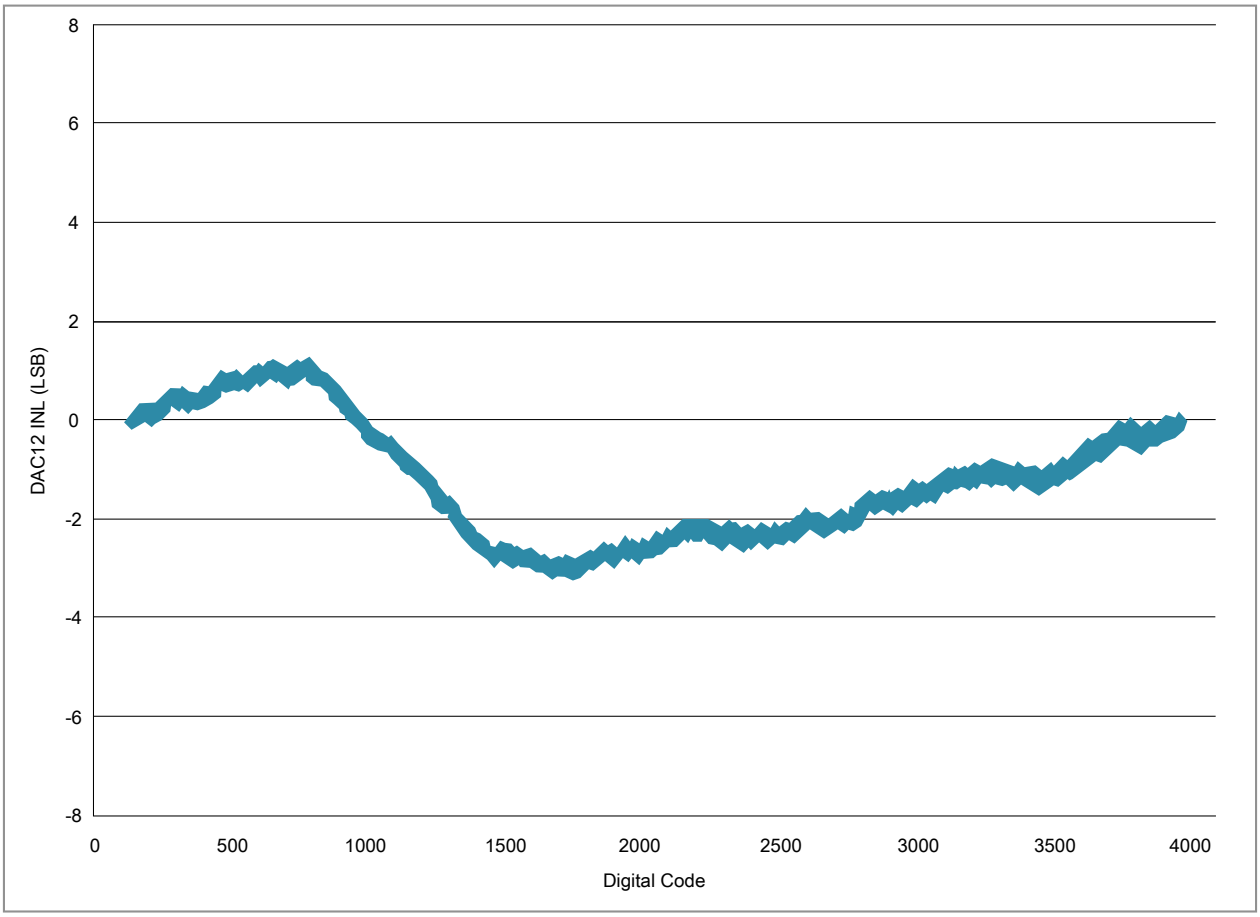

Figure 12. Typical INL error vs. digital code

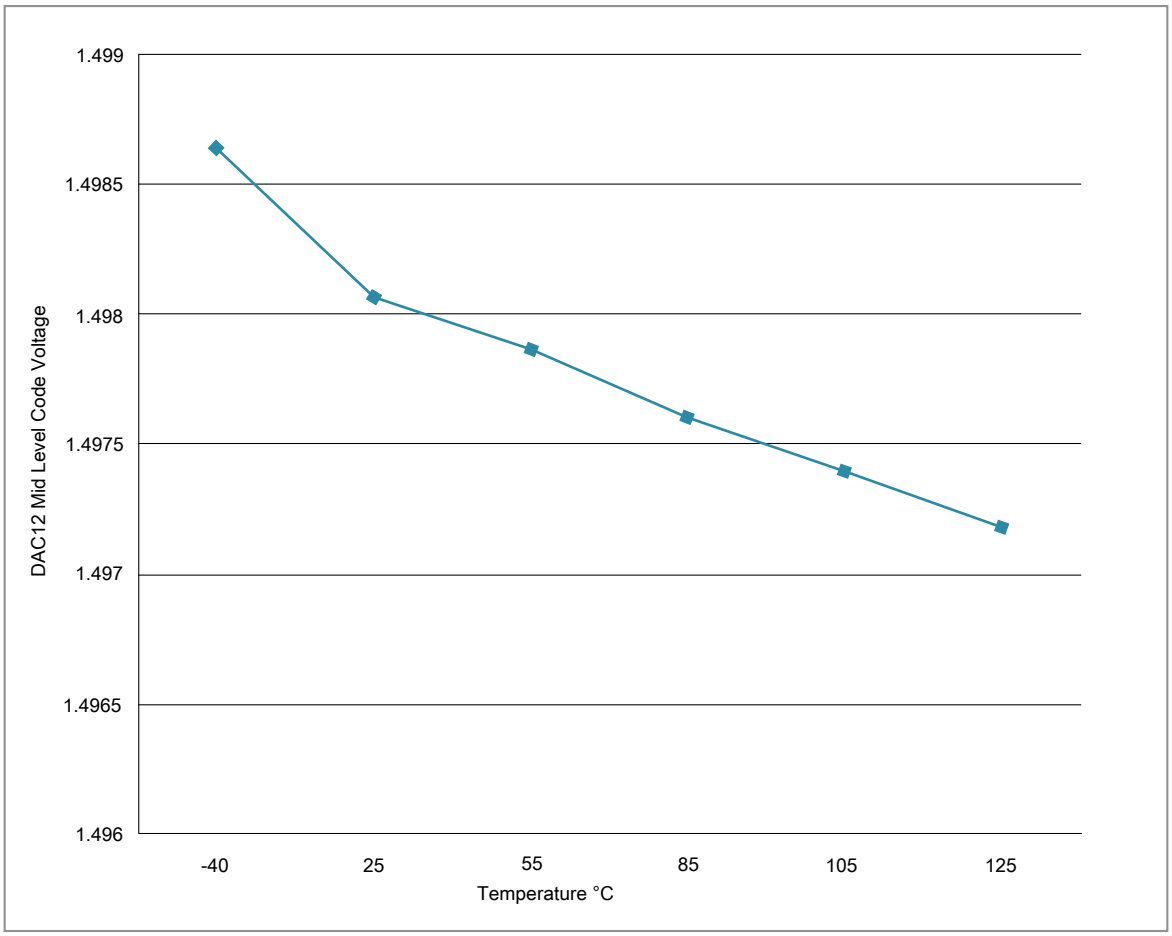

Figure 13. Offset at half scale vs. temperature

3.7 Timers

See General switching specifications.

3.8 Communication interfaces

3.8.1 SPI switching specifications

The Serial Peripheral Interface (SPI) provides a synchronous serial bus with master and slave operations. Many of the transfer attributes are programmable. The following tables provide timing characteristics for classic SPI timing modes. See the SPI chapter of the chip's Reference Manual for information about the modified transfer formats used for communicating with slower peripheral devices.

All timing is shown with respect to 20% V_{DD} and 80% V_{DD} thresholds, unless noted, as well as input signal transitions of 3 ns and a 30 pF maximum load on all SPI pins.

Table 36. SPI master mode timing on slew rate disabled pads

Num.	Symbol	Description	Min.	Max.	Unit	Note
1	f_{op}	Frequency of operation	$f_{periph}/2048$	$f_{periph}/2$	Hz	1
2	t_{SPSCK}	SPSCK period	2 x t_{periph}	2048 x t_{periph}	ns	2
3	t_{Lead}	Enable lead time	1/2	—	t_{SPSCK}	—
4	t_{Lag}	Enable lag time	1/2	—	t_{SPSCK}	—
5	t_{WSPSCK}	Clock (SPSCK) high or low time	t_{periph} - 30	1024 x t_{periph}	ns	—
6	t_{SU}	Data setup time (inputs)	18	—	ns	—
7	t_{HI}	Data hold time (inputs)	0	—	ns	—
8	t_v	Data valid (after SPSCK edge)	—	15	ns	—
9	t_{HO}	Data hold time (outputs)	0	—	ns	—
10	t_{RI}	Rise time input	—	t_{periph} - 25	ns	—
	t_{FI}	Fall time input				
11	t_{RO}	Rise time output	—	25	ns	—
	t_{FO}	Fall time output				

1. For SPI0 f_{periph} is the bus clock (f_{BUS}). For SPI1 f_{periph} is the system clock (f_{SYS}).
2. $t_{periph} = 1/f_{periph}$

Table 37. SPI master mode timing on slew rate enabled pads

Num.	Symbol	Description	Min.	Max.	Unit	Note
1	f_{op}	Frequency of operation	$f_{periph}/2048$	$f_{periph}/2$	Hz	1
2	t_{SPSCK}	SPSCK period	2 x t_{periph}	2048 x t_{periph}	ns	2
3	t_{Lead}	Enable lead time	1/2	—	t_{SPSCK}	—
4	t_{Lag}	Enable lag time	1/2	—	t_{SPSCK}	—
5	t_{WSPSCK}	Clock (SPSCK) high or low time	t_{periph} - 30	1024 x t_{periph}	ns	—
6	t_{SU}	Data setup time (inputs)	96	—	ns	—
7	t_{HI}	Data hold time (inputs)	0	—	ns	—

Table continues on the next page...

Table 37. SPI master mode timing on slew rate enabled pads (continued)

Num.	Symbol	Description	Min.	Max.	Unit	Note
8	t_v	Data valid (after SPSCK edge)	—	52	ns	—
9	t_{HO}	Data hold time (outputs)	0	—	ns	—
10	t_{RI}	Rise time input	—	t_{periph} - 25	ns	—
	t_{FI}	Fall time input				
11	t_{RO}	Rise time output	—	36	ns	—
	t_{FO}	Fall time output				

1. For SPI0 f_{periph} is the bus clock (f_{BUS}). For SPI1 f_{periph} is the system clock (f_{SYS}).
2. $t_{periph} = 1/f_{periph}$

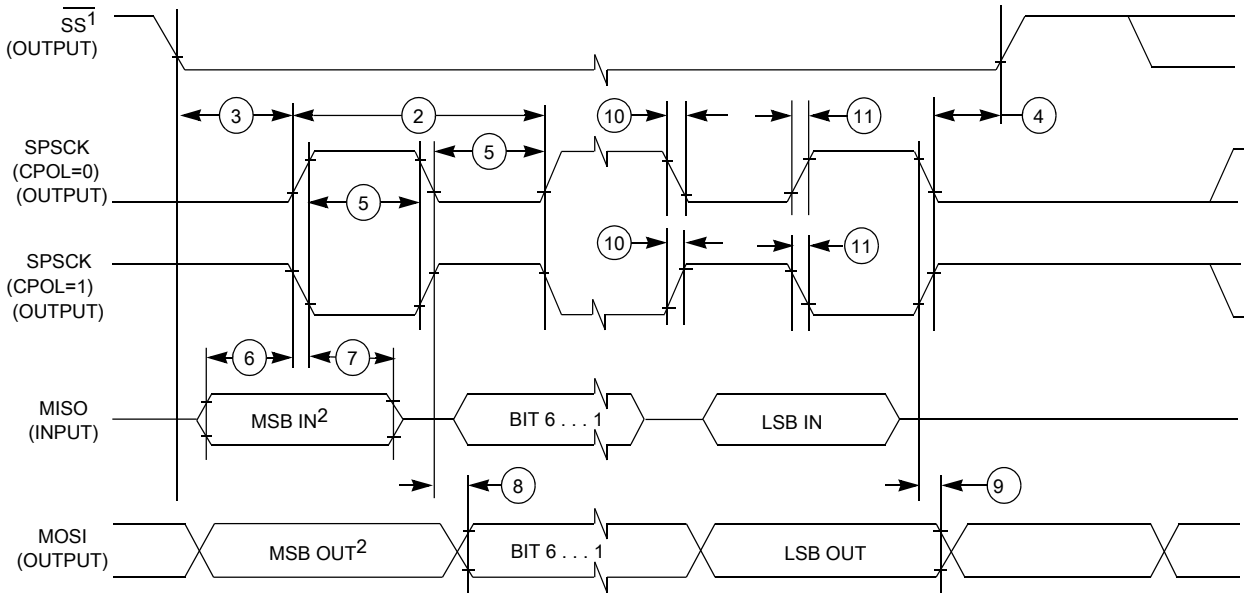

1. If configured as an output.
2. LSBF = 0. For LSBF = 1, bit order is LSB, bit 1, ..., bit 6, MSB.

Figure 14. SPI master mode timing (CPHA = 0)

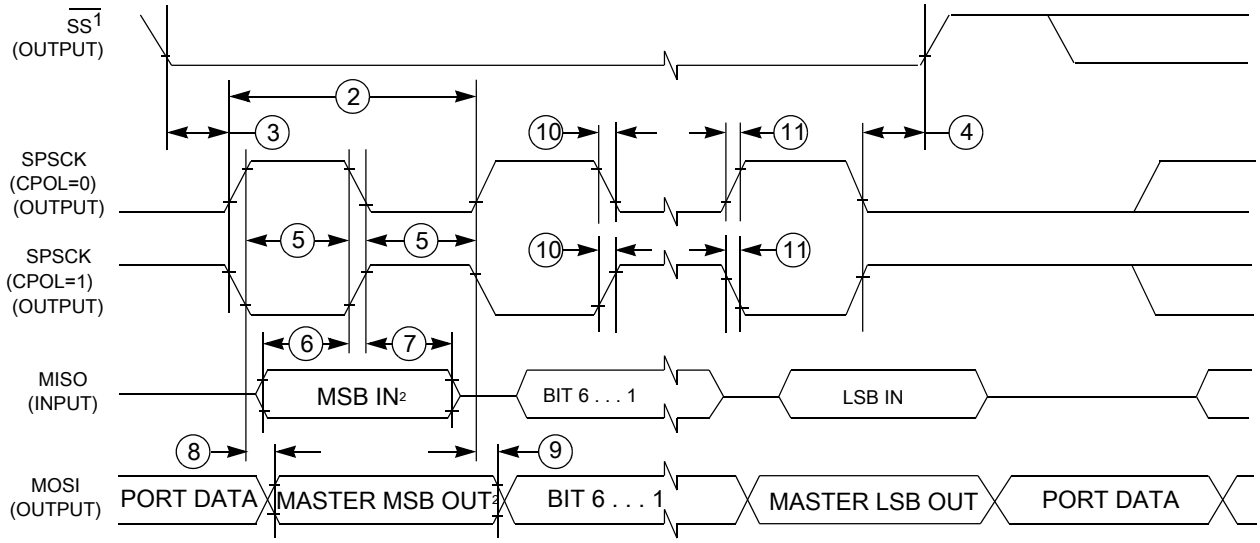

1.If configured as output

2. LSBF = 0. For LSBF = 1, bit order is LSB, bit 1, ..., bit 6, MSB.

Figure 15. SPI master mode timing (CPHA = 1)

Table 38. SPI slave mode timing on slew rate disabled pads

Num.	Symbol	Description	Min.	Max.	Unit	Note
1	f_{op}	Frequency of operation	0	$f_{periph}/4$	Hz	1
2	t_{SPSCK}	SPSCK period	4 x t_{periph}	—	ns	2
3	t_{Lead}	Enable lead time	1	—	t_{periph}	—
4	t_{Lag}	Enable lag time	1	—	t_{periph}	—
5	t_{WSPSCK}	Clock (SPSCK) high or low time	t_{periph} - 30	—	ns	—
6	t_{SU}	Data setup time (inputs)	2.5	—	ns	—
7	t_{HI}	Data hold time (inputs)	3.5	—	ns	—
8	t_a	Slave access time	—	t_{periph}	ns	3
9	t_{dis}	Slave MISO disable time	—	t_{periph}	ns	4
10	t_v	Data valid (after SPSCK edge)	—	31	ns	—
11	t_{HO}	Data hold time (outputs)	0	—	ns	—
12	t_{RI}	Rise time input	—	t_{periph} - 25	ns	—
	t_{FI}	Fall time input				
13	t_{RO}	Rise time output	—	25	ns	—
	t_{FO}	Fall time output				

1. For SPI0 f_{periph} is the bus clock (f_{BUS}). For SPI1 f_{periph} is the system clock (f_{SYS}).
2. $t_{periph} = 1/f_{periph}$
3. Time to data active from high-impedance state
4. Hold time to high-impedance state

Table 39. SPI slave mode timing on slew rate enabled pads

Num.	Symbol	Description	Min.	Max.	Unit	Note
1	f_{op}	Frequency of operation	0	$f_{periph}/4$	Hz	1
2	t_{SPSCK}	SPSCK period	4 x t_{periph}	—	ns	2
3	t_{Lead}	Enable lead time	1	—	t_{periph}	—
4	t_{Lag}	Enable lag time	1	—	t_{periph}	—
5	t_{WSPSCK}	Clock (SPSCK) high or low time	t_{periph} - 30	—	ns	—
6	t_{SU}	Data setup time (inputs)	2	—	ns	—
7	t_{HI}	Data hold time (inputs)	7	—	ns	—
8	t_a	Slave access time	—	t_{periph}	ns	3
9	t_{dis}	Slave MISO disable time	—	t_{periph}	ns	4
10	t_v	Data valid (after SPSCK edge)	—	122	ns	—
11	t_{HO}	Data hold time (outputs)	0	—	ns	—
12	t_{RI}	Rise time input	—	t_{periph} - 25	ns	—
	t_{FI}	Fall time input				
13	t_{RO}	Rise time output	—	36	ns	—
	t_{FO}	Fall time output				

1. For SPI0 f_{periph} is the bus clock (f_{BUS}). For SPI1 f_{periph} is the system clock (f_{SYS}).
2. $t_{periph} = 1/f_{periph}$
3. Time to data active from high-impedance state
4. Hold time to high-impedance state

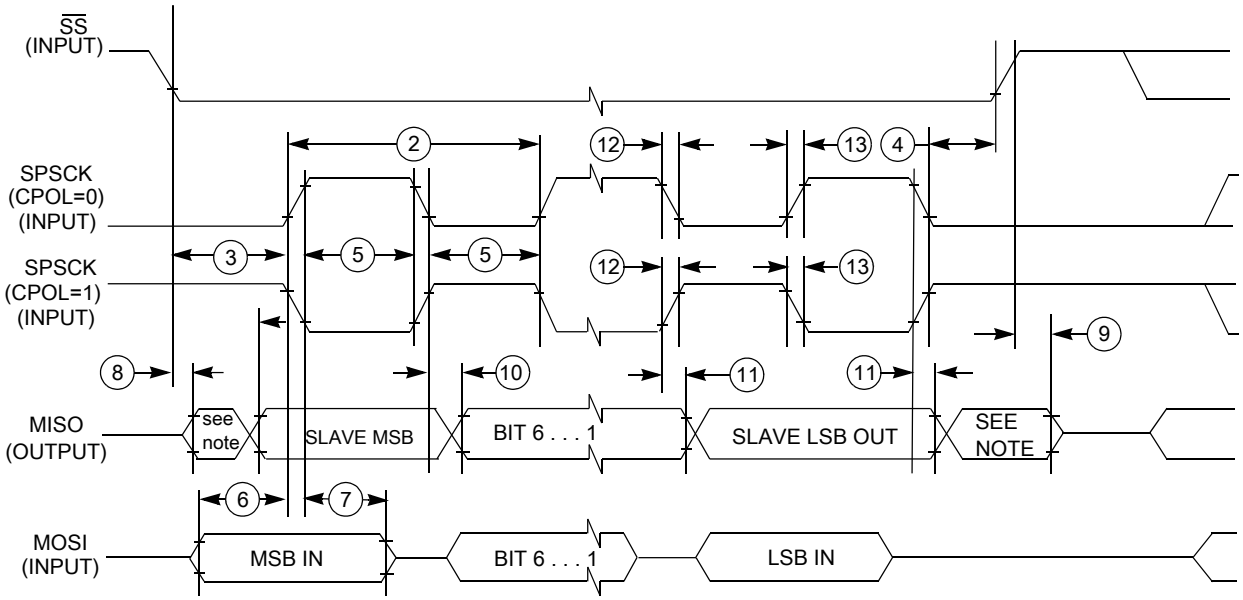

NOTE: Not defined

Figure 16. SPI slave mode timing (CPHA = 0)

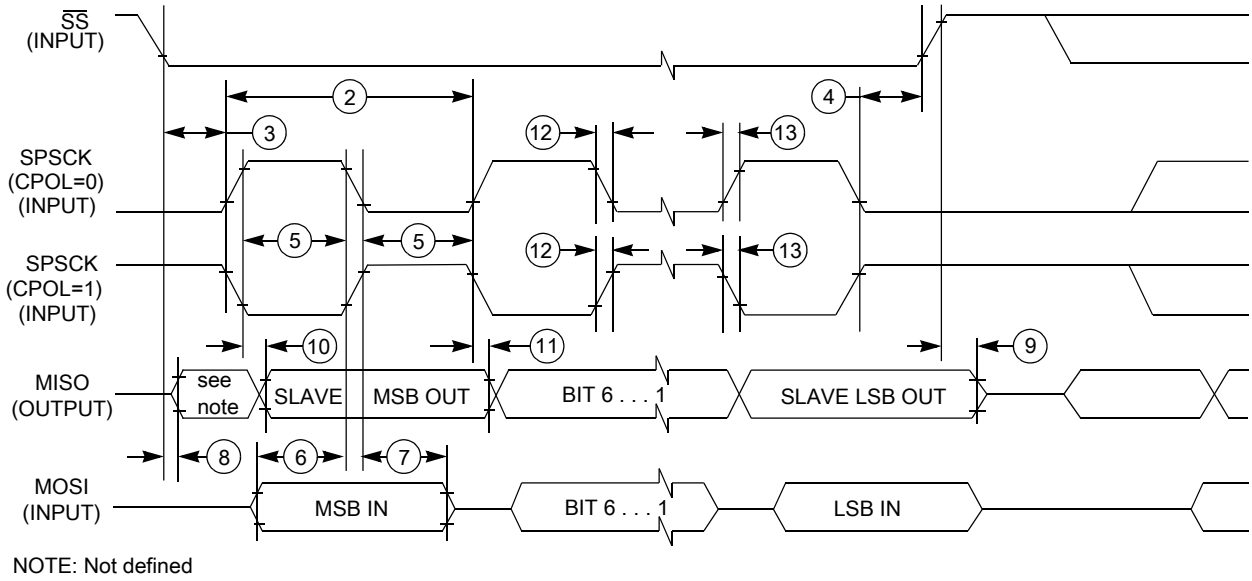

Figure 17. SPI slave mode timing (CPHA = 1)

3.8.2 I²C

3.8.2.1 Inter-Integrated Circuit Interface (I2C) timing

Table 40. I2C timing

Characteristic	Symbol	Standard Mode		Fast Mode		Unit
		Minimum	Maximum	Minimum	Maximum	
SCL Clock Frequency	f_{SCL}	0	100	0	400[1]	kHz
Hold time (repeated) START condition. After this period, the first clock pulse is generated.	t_{HD}; STA	4	—	0.6	—	μs
LOW period of the SCL clock	t_{LOW}	4.7	—	1.25	—	μs
HIGH period of the SCL clock	t_{HIGH}	4	—	0.6	—	μs
Set-up time for a repeated START condition	t_{SU}; STA	4.7	—	0.6	—	μs
Data hold time for I²C bus devices	t_{HD}; DAT	0[2]	3.45[3]	0[4]	0.9[2]	μs
Data set-up time	t_{SU}; DAT	250[5]	—	100[3], [6]	—	ns
Rise time of SDA and SCL signals	t_r	—	1000	20 +0.1C_b[7]	300	ns
Fall time of SDA and SCL signals	t_f	—	300	20 +0.1C_b[6]	300	ns
Set-up time for STOP condition	t_{SU}; STO	4	—	0.6	—	μs
Bus free time between STOP and START condition	t_{BUF}	4.7	—	1.3	—	μs
Pulse width of spikes that must be suppressed by the input filter	t_{SP}	N/A	N/A	0	50	ns

1. The maximum SCL Clock Frequency in Fast mode with maximum bus loading can be achieved only when using the high drive pins across the full voltage range and when using the normal drive pins and VDD ≥ 2.7 V.
2. The master mode I^2C deasserts ACK of an address byte simultaneously with the falling edge of SCL. If no slaves acknowledge this address byte, then a negative hold time can result, depending on the edge rates of the SDA and SCL lines.
3. The maximum tHD; DAT must be met only if the device does not stretch the LOW period (tLOW) of the SCL signal.
4. Input signal Slew = 10 ns and Output Load = 50 pF
5. Set-up time in slave-transmitter mode is 1 IPBus clock period, if the TX FIFO is empty.
6. A Fast mode I^2C bus device can be used in a Standard mode I2C bus system, but the requirement $t_{SU;\ DAT} \geq 250$ ns must then be met. This is automatically the case if the device does not stretch the LOW period of the SCL signal. If such a device does stretch the LOW period of the SCL signal, then it must output the next data bit to the SDA line $t_{rmax} + t_{SU;\ DAT} = 1000 + 250 = 1250$ ns (according to the Standard mode I^2C bus specification) before the SCL line is released.
7. C_b = total capacitance of the one bus line in pF.

Table 41. I^2C 1Mbit/s timing

Characteristic	Symbol	Minimum	Maximum	Unit
SCL Clock Frequency	f_{SCL}	0	1[1]	MHz
Hold time (repeated) START condition. After this period, the first clock pulse is generated.	t_{HD}; STA	0.26	—	μs
LOW period of the SCL clock	t_{LOW}	0.5	—	μs
HIGH period of the SCL clock	t_{HIGH}	0.26	—	μs
Set-up time for a repeated START condition	t_{SU}; STA	0.26	—	μs
Data hold time for I_2C bus devices	t_{HD}; DAT	0	—	μs
Data set-up time	t_{SU}; DAT	50	—	ns
Rise time of SDA and SCL signals	t_r	20 +0.1C_b	120	ns
Fall time of SDA and SCL signals	t_f	20 +0.1C_b[2]	120	ns
Set-up time for STOP condition	t_{SU}; STO	0.26	—	μs
Bus free time between STOP and START condition	t_{BUF}	0.5	—	μs
Pulse width of spikes that must be suppressed by the input filter	t_{SP}	0	50	ns

1. The maximum SCL clock frequency of 1 Mbit/s can support maximum bus loading when using the high drive pins across the full voltage range.
2. C_b = total capacitance of the one bus line in pF.

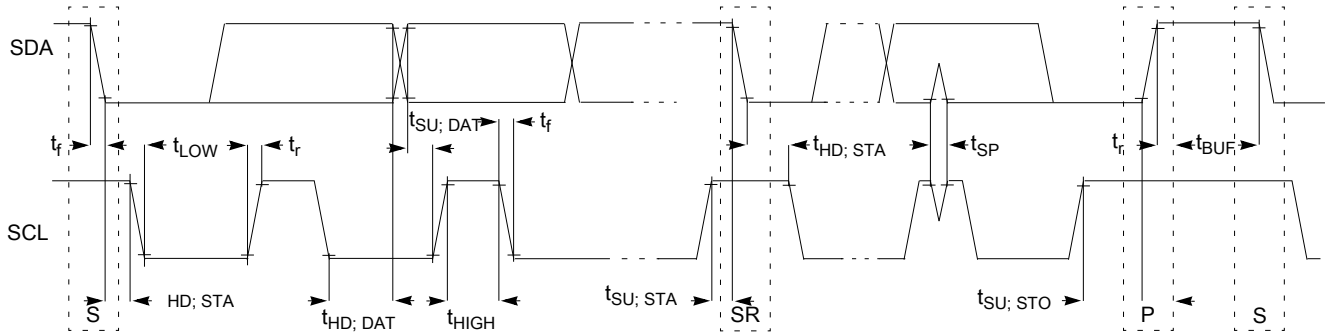

Figure 18. Timing definition for devices on the I^2C bus

3.8.3 UART

See General switching specifications.

3.8.4 I2S/SAI switching specifications

This section provides the AC timing for the I2S/SAI module in master mode (clocks are driven) and slave mode (clocks are input). All timing is given for noninverted serial clock polarity (TCR2[BCP] is 0, RCR2[BCP] is 0) and a noninverted frame sync (TCR4[FSP] is 0, RCR4[FSP] is 0). If the polarity of the clock and/or the frame sync have been inverted, all the timing remains valid by inverting the bit clock signal (BCLK) and/or the frame sync (FS) signal shown in the following figures.

3.8.4.1 Normal Run, Wait and Stop mode performance over the full operating voltage range

This section provides the operating performance over the full operating voltage for the device in Normal Run, Wait and Stop modes.

Table 42. I2S/SAI master mode timing

Num.	Characteristic	Min.	Max.	Unit
	Operating voltage	1.71	3.6	V
S1	I2S_MCLK cycle time	40	—	ns
S2	I2S_MCLK (as an input) pulse width high/low	45%	55%	MCLK period
S3	I2S_TX_BCLK/I2S_RX_BCLK cycle time (output)	80	—	ns
S4	I2S_TX_BCLK/I2S_RX_BCLK pulse width high/low	45%	55%	BCLK period
S5	I2S_TX_BCLK/I2S_RX_BCLK to I2S_TX_FS/ I2S_RX_FS output valid	—	15.5	ns
S6	I2S_TX_BCLK/I2S_RX_BCLK to I2S_TX_FS/ I2S_RX_FS output invalid	0	—	ns
S7	I2S_TX_BCLK to I2S_TXD valid	—	19	ns
S8	I2S_TX_BCLK to I2S_TXD invalid	0	—	ns
S9	I2S_RXD/I2S_RX_FS input setup before I2S_RX_BCLK	26	—	ns
S10	I2S_RXD/I2S_RX_FS input hold after I2S_RX_BCLK	0	—	ns

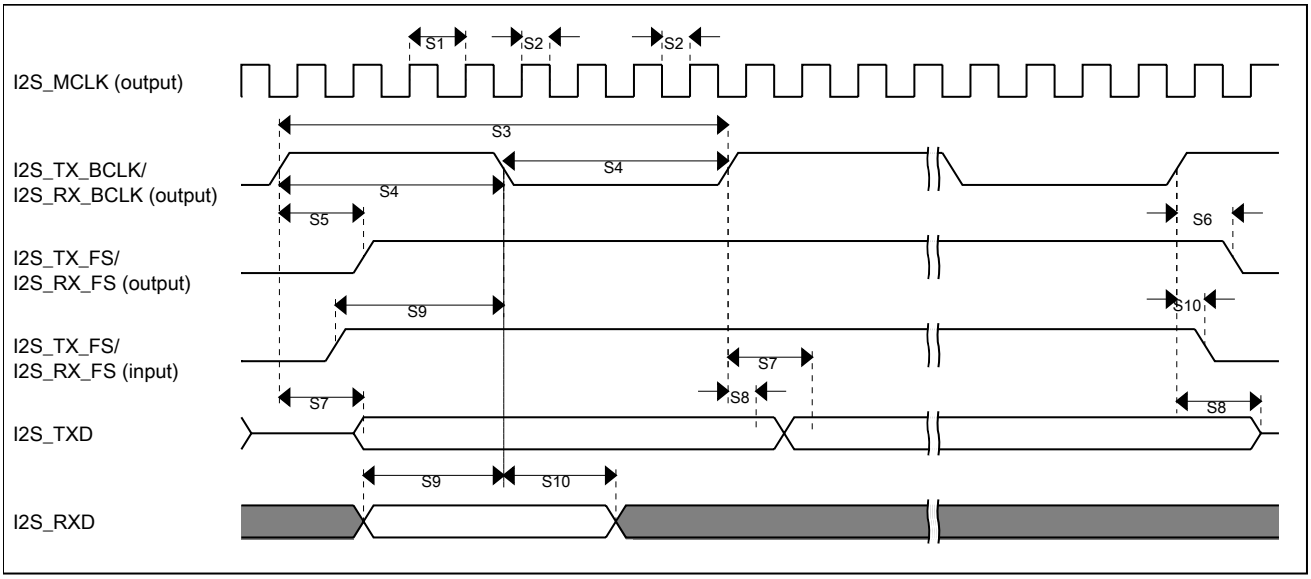

Figure 19. I2S/SAI timing — master modes

Table 43. I2S/SAI slave mode timing

Num.	Characteristic	Min.	Max.	Unit
	Operating voltage	1.71	3.6	V
S11	I2S_TX_BCLK/I2S_RX_BCLK cycle time (input)	80	—	ns
S12	I2S_TX_BCLK/I2S_RX_BCLK pulse width high/low (input)	45%	55%	MCLK period
S13	I2S_TX_FS/I2S_RX_FS input setup before I2S_TX_BCLK/I2S_RX_BCLK	10	—	ns
S14	I2S_TX_FS/I2S_RX_FS input hold after I2S_TX_BCLK/I2S_RX_BCLK	2	—	ns
S15	I2S_TX_BCLK to I2S_TXD/I2S_TX_FS output valid	—	33	ns
S16	I2S_TX_BCLK to I2S_TXD/I2S_TX_FS output invalid	0	—	ns
S17	I2S_RXD setup before I2S_RX_BCLK	10	—	ns
S18	I2S_RXD hold after I2S_RX_BCLK	2	—	ns
S19	I2S_TX_FS input assertion to I2S_TXD output valid[1]	—	28	ns

1. Applies to first bit in each frame and only if the TCR4[FSE] bit is clear

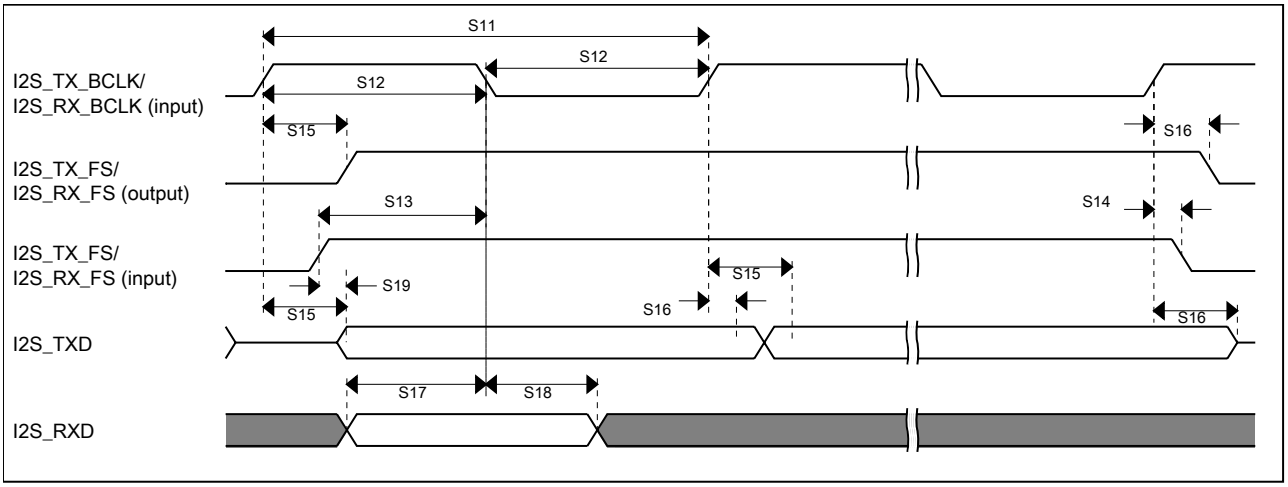

Figure 20. I2S/SAI timing — slave modes

3.8.4.2 VLPR, VLPW, and VLPS mode performance over the full operating voltage range

This section provides the operating performance over the full operating voltage for the device in VLPR, VLPW, and VLPS modes.

Table 44. I2S/SAI master mode timing in VLPR, VLPW, and VLPS modes (full voltage range)

Num.	Characteristic	Min.	Max.	Unit
	Operating voltage	1.71	3.6	V
S1	I2S_MCLK cycle time	62.5	—	ns
S2	I2S_MCLK pulse width high/low	45%	55%	MCLK period
S3	I2S_TX_BCLK/I2S_RX_BCLK cycle time (output)	250	—	ns
S4	I2S_TX_BCLK/I2S_RX_BCLK pulse width high/low	45%	55%	BCLK period
S5	I2S_TX_BCLK/I2S_RX_BCLK to I2S_TX_FS/ I2S_RX_FS output valid	—	45	ns
S6	I2S_TX_BCLK/I2S_RX_BCLK to I2S_TX_FS/ I2S_RX_FS output invalid	0	—	ns
S7	I2S_TX_BCLK to I2S_TXD valid	—	45	ns
S8	I2S_TX_BCLK to I2S_TXD invalid	0	—	ns
S9	I2S_RXD/I2S_RX_FS input setup before I2S_RX_BCLK		—	ns
S10	I2S_RXD/I2S_RX_FS input hold after I2S_RX_BCLK	0	—	ns

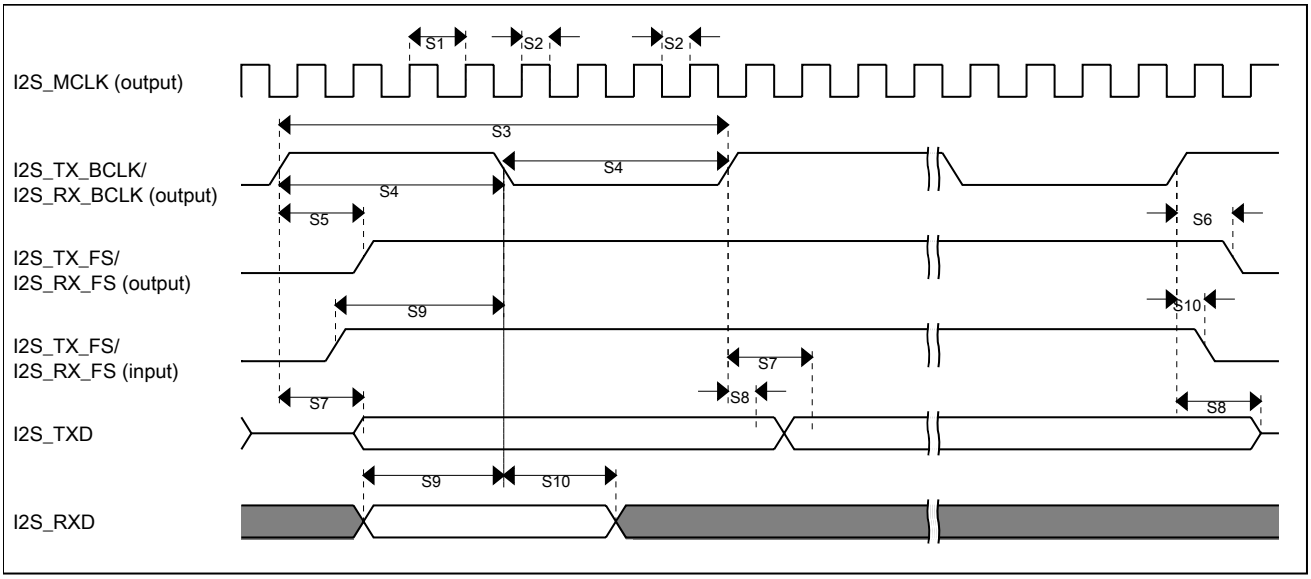

Figure 21. I2S/SAI timing — master modes

Table 45. I2S/SAI slave mode timing in VLPR, VLPW, and VLPS modes (full voltage range)

Num.	Characteristic	Min.	Max.	Unit
	Operating voltage	1.71	3.6	V
S11	I2S_TX_BCLK/I2S_RX_BCLK cycle time (input)	250	—	ns
S12	I2S_TX_BCLK/I2S_RX_BCLK pulse width high/low (input)	45%	55%	MCLK period
S13	I2S_TX_FS/I2S_RX_FS input setup before I2S_TX_BCLK/I2S_RX_BCLK	30	—	ns
S14	I2S_TX_FS/I2S_RX_FS input hold after I2S_TX_BCLK/I2S_RX_BCLK	2	—	ns
S15	I2S_TX_BCLK to I2S_TXD/I2S_TX_FS output valid	—	87	ns
S16	I2S_TX_BCLK to I2S_TXD/I2S_TX_FS output invalid	0	—	ns
S17	I2S_RXD setup before I2S_RX_BCLK	30	—	ns
S18	I2S_RXD hold after I2S_RX_BCLK	2	—	ns
S19	I2S_TX_FS input assertion to I2S_TXD output valid[1]	—	72	ns

1. Applies to first bit in each frame and only if the TCR4[FSE] bit is clear

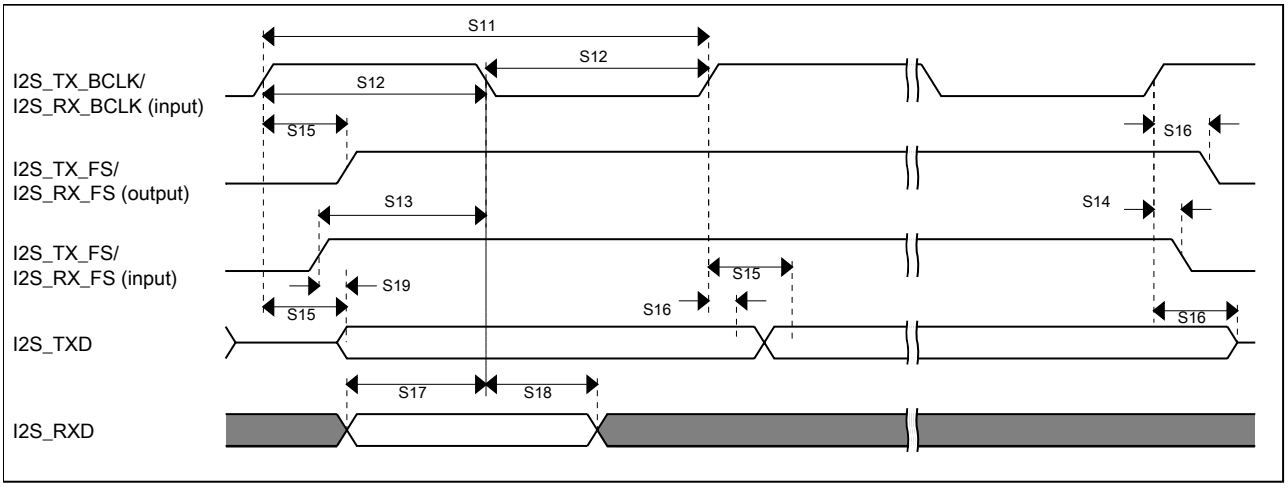

Figure 22. I2S/SAI timing — slave modes

4 Dimensions

4.1 Obtaining package dimensions

Package dimensions are provided in package drawings.

To find a package drawing, go to freescale.com and perform a keyword search for the drawing's document number:

If you want the drawing for this package	Then use this document number
32-pin QFN	98ASA00615D
36-pin WLCSP	98ASA00949D
48-pin QFN	98ASA00616D
64-pin LQFP	98ASS23234W
64-pin MAPBGA	98ASA00420D

5 Pinouts and Packaging

5.1 KL17 signal multiplexing and pin assignments

The following table shows the signals available on each pin and the locations of these pins on the devices supported by this document. The Port Control Module is responsible for selecting which ALT functionality is available on each pin.

NOTE

VREFH can act as VREF_OUT when VREFV1 module is enabled.

NOTE

It is prohibited to set VREFEN in 32 QFN and 36 WLCSP pin packages because 1.2 V on-chip voltage is not available in these packages.

64 MAP BGA	64 LQFP	48 QFN	36 WLCSP	32 QFN	Pin Name	Default	ALT0	ALT1	ALT2	ALT3	ALT4	ALT5	ALT6	ALT7
A1	1	—	—	1	PTE0	DISABLED		PTE0/ CLKOUT32K	SPI1_MISO	LPUART1_TX	RTC_CLKOUT	CMP0_OUT	I2C1_SDA	
B1	2	—	—	2	PTE1	DISABLED		PTE1	SPI1_MOSI	LPUART1_RX		SPI1_MISO	I2C1_SCL	
—	3	1	—	—	VDD	VDD	VDD							
C4	4	2	—	—	VSS	VSS	VSS							
E1	5	3	—	3	PTE16	ADC0_DP1/ ADC0_SE1	ADC0_DP1/ ADC0_SE1	PTE16	SPI0_PCS0	UART2_TX	TPM_CLKIN0		FXIO0_D0	
D1	6	4	—	4	PTE17	ADC0_DM1/ ADC0_SE5a	ADC0_DM1/ ADC0_SE5a	PTE17	SPI0_SCK	UART2_RX	TPM_CLKIN1	LPTMR0_ALT3	FXIO0_D1	
E2	7	5	—	5	PTE18	ADC0_DP2/ ADC0_SE2	ADC0_DP2/ ADC0_SE2	PTE18	SPI0_MOSI		I2C0_SDA	SPI0_MISO	FXIO0_D2	
D2	8	6	—	6	PTE19	ADC0_DM2/ ADC0_SE6a	ADC0_DM2/ ADC0_SE6a	PTE19	SPI0_MISO		I2C0_SCL	SPI0_MOSI	FXIO0_D3	
G1	9	7	—	—	PTE20	ADC0_DP0/ ADC0_SE0	ADC0_DP0/ ADC0_SE0	PTE20		TPM1_CH0	LPUART0_TX		FXIO0_D4	
F1	10	8	—	—	PTE21	ADC0_DM0/ ADC0_SE4a	ADC0_DM0/ ADC0_SE4a	PTE21		TPM1_CH1	LPUART0_RX		FXIO0_D5	
G2	11	—	—	—	PTE22	ADC0_DP3/ ADC0_SE3	ADC0_DP3/ ADC0_SE3	PTE22		TPM2_CH0	UART2_TX		FXIO0_D6	
F2	12	—	—	—	PTE23	ADC0_DM3/ ADC0_SE7a	ADC0_DM3/ ADC0_SE7a	PTE23		TPM2_CH1	UART2_RX		FXIO0_D7	

64 MAP BGA	64 LQFP	48 QFN	36 WLCSP	32 QFN	Pin Name	Default	ALT0	ALT1	ALT2	ALT3	ALT4	ALT5	ALT6	ALT7
F4	13	9	E6	7	VDDA	VDDA	VDDA							
G4	14	10	E6	—	VREFH	VREFH	VREFH							
G3	15	11	F6	—	VREFL	VREFL	VREFL							
F3	16	12	F6	8	VSSA	VSSA	VSSA							
H1	17	13	—	—	PTE29	CMP0_IN5/ ADC0_SE4b	CMP0_IN5/ ADC0_SE4b	PTE29		TPM0_CH2	TPM_ CLKIN0			
H2	18	14	E5	9	PTE30	DAC0_OUT/ ADC0_ SE23/ CMP0_IN4	DAC0_OUT/ ADC0_ SE23/ CMP0_IN4	PTE30		TPM0_CH3	TPM_ CLKIN1	LPUART1_ TX	LPTMR0_ ALT1	
H3	19	—	—	—	PTE31	DISABLED		PTE31		TPM0_CH4				
H4	20	15	—	—	PTE24	DISABLED		PTE24		TPM0_CH0		I2C0_SCL		
H5	21	16	—	—	PTE25	DISABLED		PTE25		TPM0_CH1		I2C0_SDA		
D3	22	17	F5	10	PTA0	SWD_CLK		PTA0		TPM0_CH5				SWD_CLK
D4	23	18	E4	11	PTA1	DISABLED		PTA1	LPUART0_ RX	TPM2_CH0				
E5	24	19	D4	12	PTA2	DISABLED		PTA2	LPUART0_ TX	TPM2_CH1				
D5	25	20	F4	13	PTA3	SWD_DIO		PTA3	I2C1_SCL	TPM0_CH0				SWD_DIO
G5	26	21	F3	14	PTA4	NMI_b		PTA4	I2C1_SDA	TPM0_CH1				NMI_b
F5	27	—	—	—	PTA5	DISABLED		PTA5		TPM0_CH2			I2S0_TX_ BCLK	
H6	28	—	—	—	PTA12	DISABLED		PTA12		TPM1_CH0			I2S0_TXD0	
G6	29	—	—	—	PTA13	DISABLED		PTA13		TPM1_CH1			I2S0_TX_ FS	
—	—	—	E3	—	PTA14	DISABLED		PTA14	SPI0_PCS0	LPUART0_ TX			I2S0_RX_ BCLK	I2S0_TXD0
—	—	—	D3	—	PTA15	DISABLED		PTA15	SPI0_SCK	LPUART0_ RX			I2S0_RXD0	
—	—	—	C3	—	PTA16	DISABLED		PTA16	SPI0_MOSI			SPI0_MISO	I2S0_RX_ FS	I2S0_RXD0
—	—	—	D2	—	PTA17	DISABLED		PTA17	SPI0_MISO			SPI0_MOSI	I2S0_MCLK	
G7	30	22	E2	15	VDD	VDD	VDD							
H7	31	23	F2	16	VSS	VSS	VSS							
H8	32	24	F1	17	PTA18	EXTAL0	EXTAL0	PTA18		LPUART1_ RX	TPM_ CLKIN0			
G8	33	25	E1	18	PTA19	XTAL0	XTAL0	PTA19		LPUART1_ TX	TPM_ CLKIN1		LPTMR0_ ALT1	
F8	34	26	D1	19	PTA20	RESET_b		PTA20						RESET_b
F7	35	27	C2	20	PTB0/ LLWU_P5	ADC0_SE8	ADC0_SE8	PTB0/ LLWU_P5	I2C0_SCL	TPM1_CH0				
F6	36	28	C1	21	PTB1	ADC0_SE9	ADC0_SE9	PTB1	I2C0_SDA	TPM1_CH1				
E7	37	29	—	—	PTB2	ADC0_SE12	ADC0_SE12	PTB2	I2C0_SCL	TPM2_CH0				

64 MAP BGA	64 LQFP	48 QFN	36 WLCSP	32 QFN	Pin Name	Default	ALT0	ALT1	ALT2	ALT3	ALT4	ALT5	ALT6	ALT7
E8	38	30	—	—	PTB3	ADC0_SE13	ADC0_SE13	PTB3	I2C0_SDA	TPM2_CH1				
E6	39	31	—	—	PTB16	DISABLED		PTB16	SPI1_MOSI	LPUART0_RX	TPM_CLKIN0	SPI1_MISO		
D7	40	32	—	—	PTB17	DISABLED		PTB17	SPI1_MISO	LPUART0_TX	TPM_CLKIN1	SPI1_MOSI		
D6	41	—	—	—	PTB18	DISABLED		PTB18		TPM2_CH0	I2S0_TX_BCLK			
C7	42	—	—	—	PTB19	DISABLED		PTB19		TPM2_CH1	I2S0_TX_FS			
D8	43	33	—	—	PTC0	ADC0_SE14	ADC0_SE14	PTC0		EXTRG_IN	audioUSB_SOF_OUT	CMP0_OUT	I2S0_TXD0	
C6	44	34	B1	22	PTC1/LLWU_P6/RTC_CLKIN	ADC0_SE15	ADC0_SE15	PTC1/LLWU_P6/RTC_CLKIN	I2C1_SCL		TPM0_CH0		I2S0_TXD0	
B7	45	35	B2	23	PTC2	ADC0_SE11	ADC0_SE11	PTC2	I2C1_SDA		TPM0_CH1		I2S0_TX_FS	
C8	46	36	A1	24	PTC3/LLWU_P7	DISABLED		PTC3/LLWU_P7	SPI1_SCK	LPUART1_RX	TPM0_CH2	CLKOUT	I2S0_TX_BCLK	
E3	47	—	C4	—	VSS	VSS	VSS							
E4	48	—	B3	—	VDD	VDD	VDD							
B8	49	37	A2	25	PTC4/LLWU_P8	DISABLED		PTC4/LLWU_P8	SPI0_PCS0	LPUART1_TX	TPM0_CH3	I2S0_MCLK		
A8	50	38	A3	26	PTC5/LLWU_P9	DISABLED		PTC5/LLWU_P9	SPI0_SCK	LPTMR0_ALT2	I2S0_RXD0		CMP0_OUT	
A7	51	39	B4	27	PTC6/LLWU_P10	CMP0_IN0	CMP0_IN0	PTC6/LLWU_P10	SPI0_MOSI	EXTRG_IN	I2S0_RX_BCLK	SPI0_MISO	I2S0_MCLK	
B6	52	40	A4	28	PTC7	CMP0_IN1	CMP0_IN1	PTC7	SPI0_MISO	audioUSB_SOF_OUT	I2S0_RX_FS	SPI0_MOSI		
A6	53	—	—	—	PTC8	CMP0_IN2	CMP0_IN2	PTC8	I2C0_SCL	TPM0_CH4	I2S0_MCLK			
B5	54	—	—	—	PTC9	CMP0_IN3	CMP0_IN3	PTC9	I2C0_SDA	TPM0_CH5	I2S0_RX_BCLK			
B4	55	—	—	—	PTC10	DISABLED		PTC10	I2C1_SCL		I2S0_RX_FS			
A5	56	—	—	—	PTC11	DISABLED		PTC11	I2C1_SDA		I2S0_RXD0			
C3	57	41	—	—	PTD0	DISABLED		PTD0	SPI0_PCS0		TPM0_CH0		FXIO0_D0	
A4	58	42	—	—	PTD1	ADC0_SE5b	ADC0_SE5b	PTD1	SPI0_SCK		TPM0_CH1		FXIO0_D1	
C2	59	43	—	—	PTD2	DISABLED		PTD2	SPI0_MOSI	UART2_RX	TPM0_CH2	SPI0_MISO	FXIO0_D2	
B3	60	44	—	—	PTD3	DISABLED		PTD3	SPI0_MISO	UART2_TX	TPM0_CH3	SPI0_MOSI	FXIO0_D3	
A3	61	45	A5	29	PTD4/LLWU_P14	DISABLED		PTD4/LLWU_P14	SPI1_PCS0	UART2_RX	TPM0_CH4		FXIO0_D4	
C1	62	46	B5	30	PTD5	ADC0_SE6b	ADC0_SE6b	PTD5	SPI1_SCK	UART2_TX	TPM0_CH5		FXIO0_D5	
B2	63	47	A6	31	PTD6/LLWU_P15	ADC0_SE7b	ADC0_SE7b	PTD6/LLWU_P15	SPI1_MOSI	LPUART0_RX		SPI1_MISO	FXIO0_D6	

64 MAP BGA	64 LQFP	48 QFN	36 WLCSP	32 QFN	Pin Name	Default	ALT0	ALT1	ALT2	ALT3	ALT4	ALT5	ALT6	ALT7
A2	64	48	B6	32	PTD7	DISABLED		PTD7	SPI1_MISO	LPUART0_TX		SPI1_MOSI	FXIO0_D7	
C5	—	—	C5	—	Reserved	Reserved	Reserved							
—	—	—	C6	—	Reserved	Reserved	Reserved							
—	—	—	D5	—	Reserved	Reserved	Reserved							
—	—	—	D6	—	Reserved	Reserved	Reserved							

5.2 KL17 Family Pinouts

Figure below shows the 32 QFN pinouts:

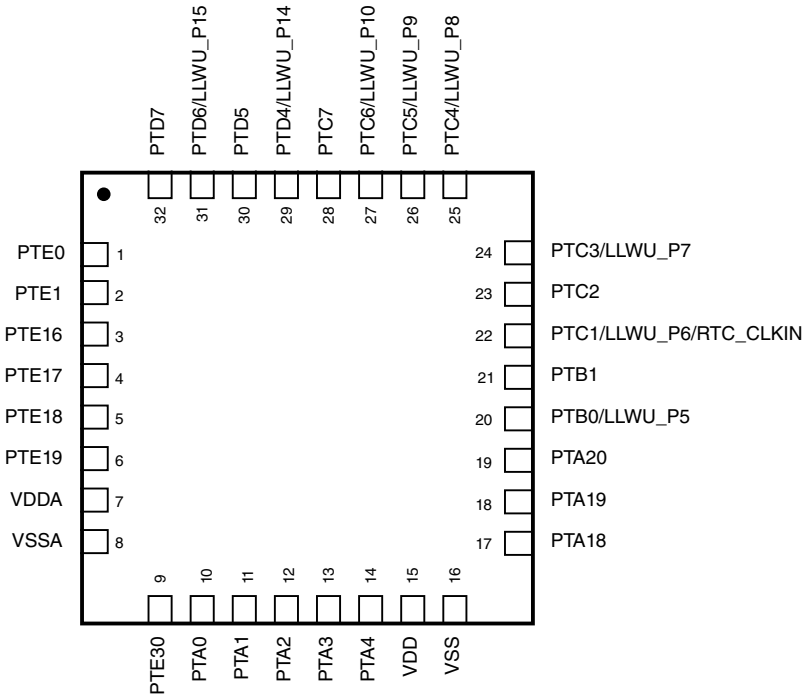

Figure 23. 32 QFN Pinout diagram

Figure below shows the 36 WLCSP pinouts:

	1	2	3	4	5	6	
A	PTC3	PTC4	PTC5	PTC7	PTD4	PTD6	A
B	PTC1	PTC2	VDD	PTC6	PTD5	PTD7	B
C	PTB1	PTB0	PTA16	VSS	Reserved	Reserved	C
D	PTA20	PTA17	PTA15	PTA2	Reserved	Reserved	D
E	PTA19	VDD	PTA14	PTA1	PTE30	VDDA/ VREFH	E
F	PTA18	VSS	PTA4	PTA3	PTA0	VSSA/ VREFL	F
	1	2	3	4	5	6	

Figure 24. 36 WLCSP Pinout diagram

Figure below shows the 48 QFN pinouts:

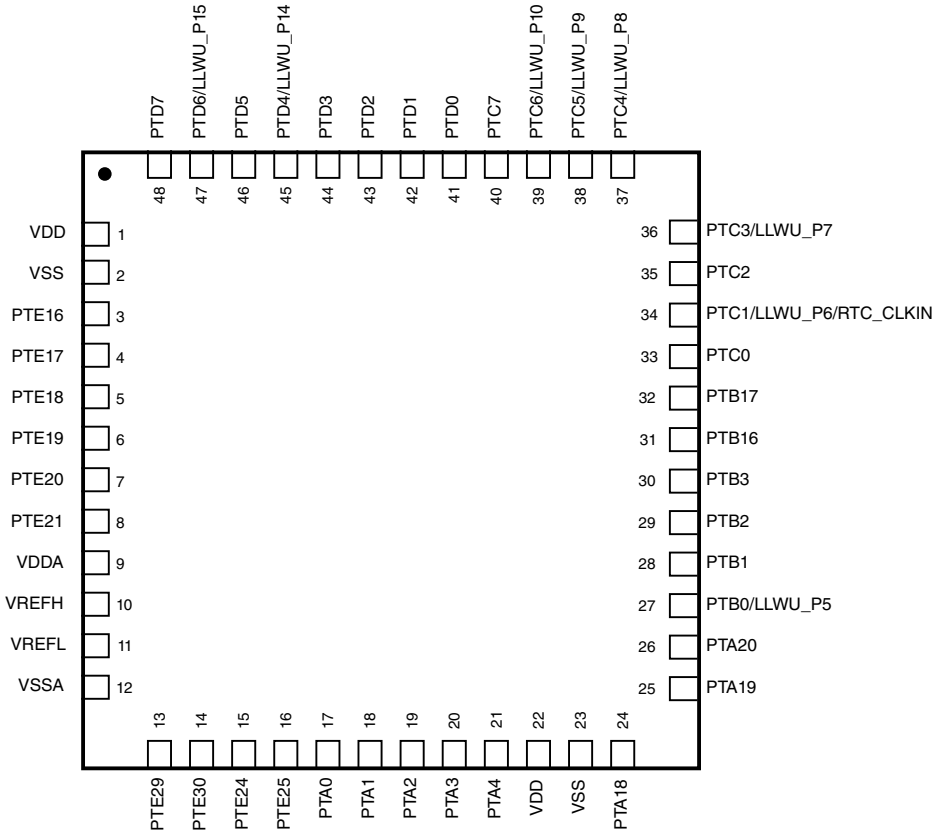

Figure 25. 48 QFN Pinout diagram

Figure below shows the 64 MAPBGA pinouts:

	1	2	3	4	5	6	7	8	
A	PTE0	PTD7	PTD4/ LLWU_P14	PTD1	PTC11	PTC8	PTC6/ LLWU_P10	PTC5/ LLWU_P9	A
B	PTE1	PTD6/ LLWU_P15	PTD3	PTC10	PTC9	PTC7	PTC2	PTC4/ LLWU_P8	B
C	PTD5	PTD2	PTD0	VSS	NC	PTC1/ LLWU_P6/ RTC_CLKIN	PTB19	PTC3/ LLWU_P7	C
D	PTE17	PTE19	PTA0	PTA1	PTA3	PTB18	PTB17	PTC0	D
E	PTE16	PTE18	VSS	VDD	PTA2	PTB16	PTB2	PTB3	E
F	PTE21	PTE23	VSSA	VDDA	PTA5	PTB1	PTB0/ LLWU_P5	PTA20	F
G	PTE20	PTE22	VREFL	VREFH	PTA4	PTA13	VDD	PTA19	G
H	PTE29	PTE30	PTE31	PTE24	PTE25	PTA12	VSS	PTA18	H
	1	2	3	4	5	6	7	8	

Figure 26. 64 MAPBGA Pinout diagram:

Figure below shows the 64 LQFP pinouts:

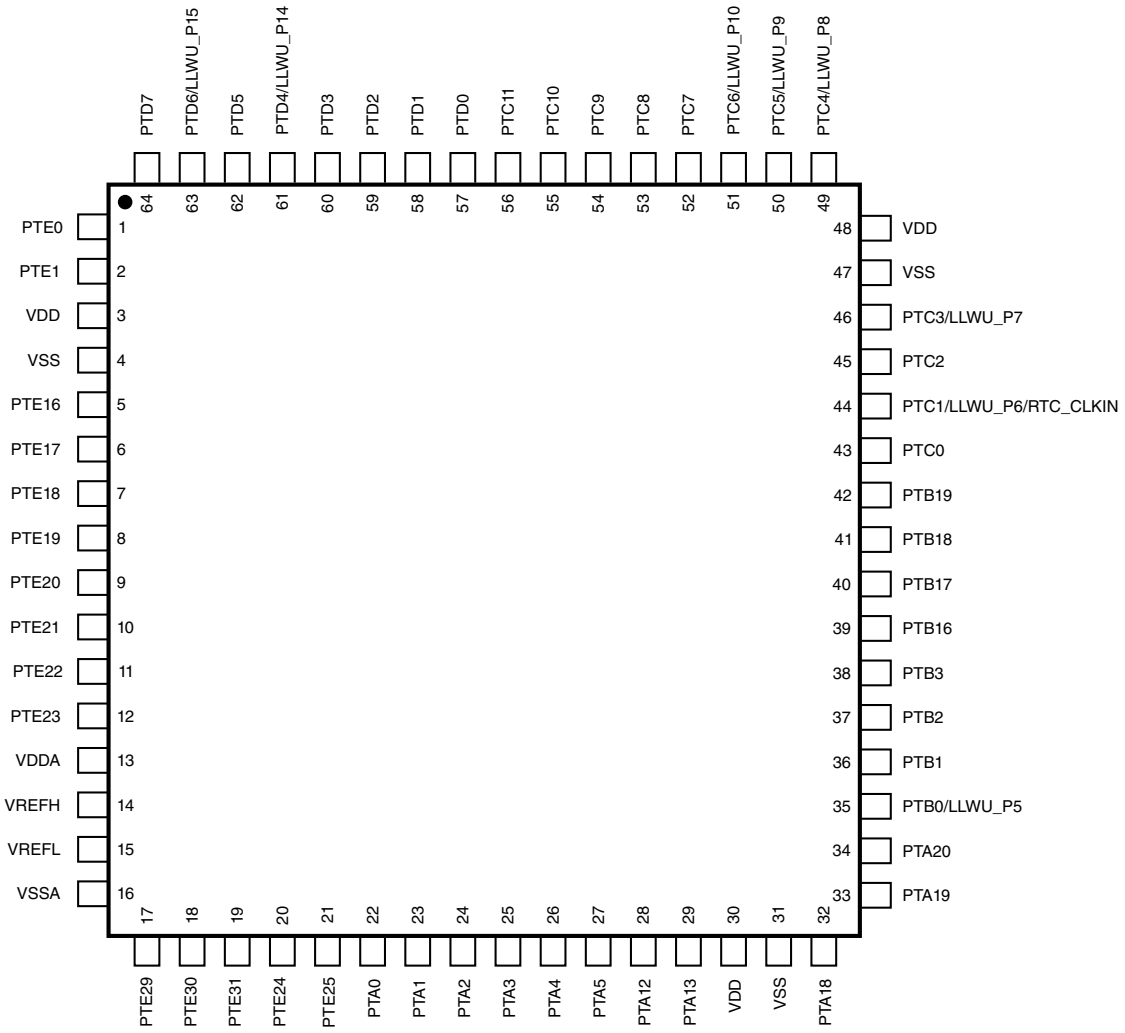

Figure 27. 64 LQFP Pinout diagram

5.3 Recommended connection for unused analog and digital pins

Table 46 shows the recommended connections for analog interface pins if those analog interfaces are not used in the customer's application

Table 46. Recommended connection for unused analog interfaces

Pin Type	KL17	Short recommendation	Detailed recommendation
GPIO/Analog	PTA18/EXTAL0	Float	Analog input - Float
GPIO/Analog	PTA19/XTAL0	Float	Analog output - Float
GPIO/Analog	PTx/DAC0_OUT	Float	Float (default is analog input)
GPIO/Analog	PTx/ADCx	Float	Float (default is analog input)
GPIO/Analog	PTx/CMPx	Float	Float (default is analog input)
GPIO/Digital	PTA0/SWD_CLK	Float	Float (default is SWD with pulldown)
GPIO/Digital	PTA3/SWD_DIO	Float	Float (default is SWD with pullup)
GPIO/Digital	PTA4/NMI_b	10 kΩ pullup or disabled and float	Pull high or disable in PCR & FOPT and float
GPIO/Digital	PTx	Float	Float (default is disabled)
VDDA	VDDA	Always connect to VDD potential	Always connect to VDD potential
VREFH	VREFH	Always connect to VDD potential	Always connect to VDD potential
VREFL	VREFL	Always connect to VSS potential	Always connect to VSS potential
VSSA	VSSA	Always connect to VSS potential	Always connect to VSS potential
Reserved	Reserved	Tie to ground through 10 kΩ	Tie to ground through 10 kΩ

6 Ordering parts

6.1 Determining valid orderable parts

Valid orderable part numbers are provided on the Web. To determine the orderable part numbers for this device, go to freescale.com and perform a part number search for the following device numbers:

7 Part identification

7.1 Description

Part numbers for the chip have fields that identify the specific part. You can use the values of these fields to determine the specific part you have received.

7.2 Format

Part numbers for this device have the following format:

Q KL## A FFF R T PP CC N

7.3 Fields

This table lists the possible values for each field in the part number (not all combinations are valid):

Table 47. Part number fields descriptions

Field	Description	Values
Q	Qualification status	• M = Fully qualified, general market flow • P = Prequalification
KL##	Kinetis family	• KL17
A	Key attribute	• Z = Cortex-M0+
FFF	Program flash memory size	• 128 = 128 KB • 256 = 256 KB
R	Silicon revision	• (Blank) = Main • A = Revision after main
T	Temperature range (°C)	• V = –40 to 105 • C = –40 to 85
PP	Package identifier	• FM = 32 QFN (5 mm x 5 mm) • AL = 36 WLCSP (2.8 mm x 2.7 mm) • FT = 48 QFN (7 mm x 7 mm) • LH = 64 LQFP (10 mm x 10 mm) • MP = 64 MAPBGA (5 mm x 5 mm)
CC	Maximum CPU frequency (MHz)	• 4 = 48 MHz
N	Packaging type	• R = Tape and reel

7.4 Example

This is an example part number:

8 Terminology and guidelines

8.1 Definitions

Key terms are defined in the following table:

Term	Definition
Rating	A minimum or maximum value of a technical characteristic that, if exceeded, may cause permanent chip failure: • *Operating ratings* apply during operation of the chip. • *Handling ratings* apply when the chip is not powered. **NOTE:** The likelihood of permanent chip failure increases rapidly as soon as a characteristic begins to exceed one of its operating ratings.
Operating requirement	A specified value or range of values for a technical characteristic that you must guarantee during operation to avoid incorrect operation and possibly decreasing the useful life of the chip
Operating behavior	A specified value or range of values for a technical characteristic that are guaranteed during operation if you meet the operating requirements and any other specified conditions
Typical value	A specified value for a technical characteristic that: • Lies within the range of values specified by the operating behavior • Is representative of that characteristic during operation when you meet the typical-value conditions or other specified conditions **NOTE:** Typical values are provided as design guidelines and are neither tested nor guaranteed.

8.2 Examples

Operating rating:

Symbol	Description	Min.	Max.	Unit
V_{DD}	1.0 V core supply voltage	–0.3	1.2	V

Operating requirement:

Symbol	Description	Min.	Max.	Unit
V_{DD}	1.0 V core supply voltage	0.9	1.1	V

Operating behavior that includes a *typical value*:

Symbol	Description	Min.	Typ.	Max.	Unit
I_{WP}	Digital I/O weak pullup/pulldown current	10	70	130	µA

EXAMPLE

8.3 Typical-value conditions

Typical values assume you meet the following conditions (or other conditions as specified):

Symbol	Description	Value	Unit
T_A	Ambient temperature	25	°C
V_{DD}	Supply voltage	3.3	V

8.4 Relationship between ratings and operating requirements

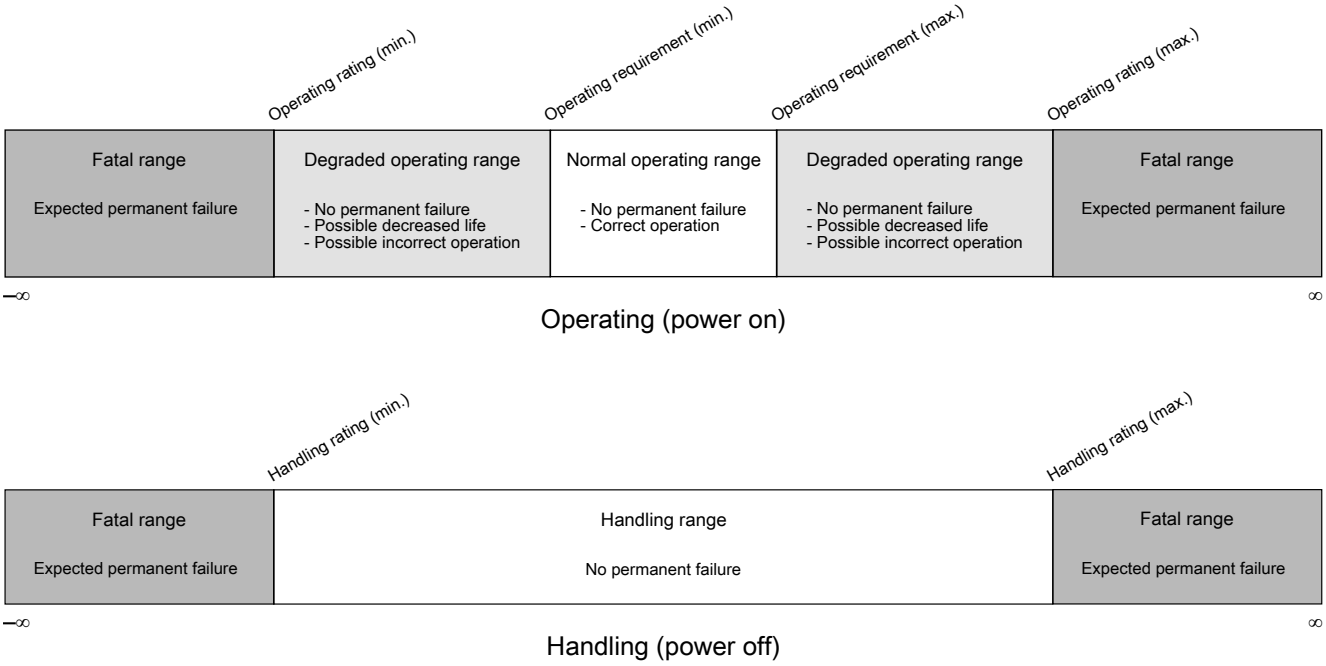

8.5 Guidelines for ratings and operating requirements

Follow these guidelines for ratings and operating requirements:

- Never exceed any of the chip's ratings.
- During normal operation, don't exceed any of the chip's operating requirements.
- If you must exceed an operating requirement at times other than during normal operation (for example, during power sequencing), limit the duration as much as possible.

9 Revision History

The following table provides a revision history for this document.

Table 48. Revision History

Rev. No.	Date	Substantial Changes
3	09 August 2014	Initial Public release • Updated Table 9 - Power consumption operating behaviors. • Added a note related to 32 QFN pin package in Pinouts topic.
4	03 March 2015	• Updated the features and completed the ordering information. • Removed thickness dimension from package diagrams.

Table continues on the next page...

Table 48. Revision History (continued)

Rev. No.	Date	Substantial Changes

		• Updated Related Resources table to include Chip Errata resource name and Package Drawing part numbers in the respective rows. Also updated Product Brief resource references.
		• Updated Table 7. Voltage and current operating behaviors.
		  • Specified correct max. value for I_{IN}.
		• Updated Table - 9 Power consumption operating behaviors.
		  • Rows added for IDD for reset pin hold low ($I_{DD_RESET_LOW}$) at 1.7V and 3V.
		  • Measurement unit updated for I_{DD_VLLS1} from nA to µA.
		  • Footnote 1 was moved in the beginning of the table as text.
		• Added Table - 11 EMC radiated emissions operating behaviors for 64-pin LQFP package under section 2.2.6.
		• Updated Table - 18 (IRC48M specification) and Table - 19 (IRC8M/2M specification) under section 3.3.1 - 'MCG-Lite specifications'.
		  • Removed supply voltage (V_{DD}), temperature range (T), untrimmed (f_{IRC_UT}), trim function (Δf_{IRC_C}, Δf_{IRC_F}) data from Table - 18 (IRC48M specification).
		  • Removed supply voltage (V_{DD}), temperature range (T) data from Table - 19 (IRC8M/2M specification).
		• Added Figure 6. IRC8M Frequency Drift vs Temperature curve after Table - 19 (IRC8M/2M specification).
		• Updated Table 29. VREF full-range operating behaviors.
		  • Removed A_c(Aging coefficient) row.
		  • Added $T_{chop_osc_stup}$ parameter.
		• Added tables: "I2C timing" and "I2C 1Mbit/s timing" under section - I^2C.
		• Added VREF specifications (V_{REFH} and V_{REFL}) to Table 26. 16-bit ADC operating conditions.
		• Removed note: “This device does not have the USB_CLKIN signal available.”

5	12 August 2015	• In Table 9. Power consumption operating behaviors:
		  • Updated Max. values of I_{DD_WAIT}, I_{DD_VLPW}, I_{DD_STOP}, I_{DD_VLPS}, I_{DD_LLS}, I_{DD_VLLS3}, I_{DD_VLLS1}, I_{DD_VLLS0}.
		  • Modified unit of I_{DD_VLLS0} from nA to µA.
		  • Removed $I_{DD_RESET_LOW}$ information.
		• In Table 13. Device clock specifications, added a footnote for normal run mode.
		• In Table 15. Thermal operating requirements, modified the footnote for Ambient temperature.
		• In Table 18. IRC48M specification, removed f_{IRC_T} data and added $\Delta f_{irc48m_of_lv}$ and $\Delta f_{irc48m_of_hv}$ specifications.
		• In Table 26. 16-bit ADC operating conditions, updated Max. value of f_{ADCK} and C_{rate}.

5.1	16 Nov 2015	• Added 36-pin WLCSP package information.
6	25 Jan 2016	• Completed all the TBDs of the 36-pin WLCSP package.

How to Reach Us:

Home Page:
freescale.com

Web Support:
freescale.com/support

Information in this document is provided solely to enable system and software implementers to use Freescale products. There are no express or implied copyright licenses granted hereunder to design or fabricate any integrated circuits based on the information in this document. Freescale reserves the right to make changes without further notice to any products herein.

Freescale makes no warranty, representation, or guarantee regarding the suitability of its products for any particular purpose, nor does Freescale assume any liability arising out of the application or use of any product or circuit, and specifically disclaims any and all liability, including without limitation consequential or incidental damages. “Typical” parameters that may be provided in Freescale data sheets and/or specifications can and do vary in different applications, and actual performance may vary over time. All operating parameters, including “typicals,” must be validated for each customer application by customer's technical experts. Freescale does not convey any license under its patent rights nor the rights of others. Freescale sells products pursuant to standard terms and conditions of sale, which can be found at the following address: freescale.com/SalesTermsandConditions.

Freescale, the Freescale logo, the Energy Efficient Solutions logo, and Kinetis are trademarks of Freescale Semiconductor, Inc., Reg. U.S. Pat. & Tm. Off. All other product or service names are the property of their respective owners. ARM, the ARM powered logo, and Cortex are registered trademarks of ARM Limited (or its subsidiaries) in the EU and/or elsewhere. All rights reserved.

©2014-2016 Freescale Semiconductor, Inc.

Document Number KL17P64M48SF6
Revision 6, 02/2016

Общество с ограниченной ответственностью «МосЧип» ИНН 7719860671 / КПП 771901001
Адрес: 105318, г.Москва, ул.Щербаковская д.3, офис 1107

Данный компонент на территории Российской Федерации

Вы можете приобрести в компании MosChip.

Для оперативного оформления запроса Вам необходимо перейти по данной ссылке:

http://moschip.ru/get-element

Вы можете разместить у нас заказ для любого Вашего проекта, будь то серийное производство или разработка единичного прибора.

В нашем ассортименте представлены ведущие мировые производители активных и пассивных электронных компонентов.

Нашей специализацией является поставка электронной компонентной базы двойного назначения, продукции таких производителей как XILINX, Intel (ex.ALTERA), Vicor, Microchip, Texas Instruments, Analog Devices, Mini-Circuits, Amphenol, Glenair.

Сотрудничество с глобальными дистрибьюторами электронных компонентов, предоставляет возможность заказывать и получать с международных складов практически любой перечень компонентов в оптимальные для Вас сроки.

На всех этапах разработки и производства наши партнеры могут получить квалифицированную поддержку опытных инженеров.

Система менеджмента качества компании отвечает требованиям в соответствии с ГОСТ Р ИСО 9001, ГОСТ РВ 0015-002 и ЭС РД 009

Офис по работе с юридическими лицами:

105318, г.Москва, ул.Щербаковская д.3, офис 1107, 1118, ДЦ «Щербаковский»

Телефон: +7 495 668-12-70 (многоканальный)

Факс: +7 495 668-12-70 (доб.304)

E-mail: info@moschip.ru

Skype отдела продаж:
moschip.ru
moschip.ru_4
moschip.ru_6
moschip.ru_9