# Sensors and Switches

SENSING AND CONTROL

# Product Catalog

Honeywell

# SENSORS AND SWITCHES

Honeywell offers a wide selection of products and technology capability for applications in medical devices and equipment; heating, ventilation, air-conditioning and refrigeration; information technology; home appliances; motor control and automotive passenger cars. This catalogue contains a selection of our most popular, established product listings. To view our complete range of products, visit our web site at ***www.honeywell.com/sensing.***

## How to use this catalogue

For each referenced listing, key specification parameters, descriptions and mounting drawing information are presented. These listings illustrate our capabilities while the specifications included allow easy differentiation between similar products. For products with no specific reference numbers, please contact your local Honeywell sales office.

There are, of course, many more product options available. Full product specification information may be accessed on our web site (***www.honeywell.com/sensing***). At the Home page enter the catalogue listing reference in the SEARCH box and click GO! This will take you directly to the interactive catalogue/specification search tables for this listing. Alternatively, select and click the interactive catalogue icon on the Home page and then choose a product category against which to do a specification search.

Also on the web site you can access installation instructions, application notes, Frequently Asked Questions (FAQs), selection guides and additional technical information.

## Mounting dimensions

Mounting dimensions shown in each product section are for reference only. For exacting layout work, request an engineering drawing from your nearest Honeywell sales office. Where dual dimensions are shown on mounting drawings, the first or upper one is millimetres (mm) and the second or lower is inches (in). Where single dimensions are shown, they are millimetres (mm), unless otherwise stated.

## To order these products

Simply contact your local Honeywell Distributor or your local Honeywell office. More information on Honeywell products and how to contact us can be found at ***http://locator.micro.honeywell.com/***

CHECK THIS OUT!

**Interactive Catalog**

**www.honeywell.com/sensing**

## Honeywell – delivering excellence

To assist in delivering the right products for our customers' applications, we listen to them to understand their needs. Using techniques such as "Voice of the Customer" and "Concept Engineering," we aim to deliver the products and solutions. As part of Honeywell we can use local knowledge and understanding combined with global expertise and resources to achieve this. We can deploy many key technologies to bring innovative solutions to customers' problems.

Our products are manufactured to work well and to last. We use Six Sigma Plus productivity to ensure this is the case. We have award winning manufacturing facilities around the world and recognised world class business excellence in manufacturing and supply chain management to deliver on time, anywhere in the world.

Our e-business approach offers instant access to product information, technical support and application knowledge through our Internet site. Check out our powerful new interactive catalogue that can search and find the right products for customers' needs and deliver a drawing ready for incorporation in a CAD system direct to your desk.

And of course, we manage our whole business for the benefit of our customers, using an acknowledged world-class business excellence approach that incorporates Six Sigma principles.

© 2005 Honeywell International Inc. All rights reserved.

## CONTENTS


### Pressure Sensors — Page 4
Absolute, differential, gage and vacuum gage pressure sensors for media that are compatible with a silicon diaphragm. These sensors are often ideal for low-cost, commercial-grade applications such as printed circuit boards. Small and reliable, they aim to offer excellent repeatability and high accuracy under varying environmental conditions.

### Mass Airflow Sensors — Page 13
Amplified and unamplified microbridge mass airflow sensors aim at providing a sensitive, fast response and high accuracy over a broad range of gas and air flows.

### Force Sensors — Page 16
Compact, extremely sensitive devices for precise, reliable performance in many applications that requires precision force measurement.

### Humidity Sensors — Page 18
Relative humidity sensors with on-chip signal conditioning. Chemically resistant packaging to accommodate many harsh environments. Sensor construction consists of a planar capacitor with a second polymer layer to protect against dirt, dust, oils and other hazards.

### Temperature Sensors - RTDs — Page 19
Platinum and silicon-based thin film resistance temperature devices (RTDs) for appropriate applications requiring small package size, accuracy and linear outputs.

### Temperature Sensors - Thermistors — Page 21
Precision Hi-Rel negative temperature coefficient (NTC) thermistors and positive temperature coefficient (PTC) thermistors for use in a broad variety of temperature measurement and control applications.

### Temperature Sensors - Probes — Page 27
A variety of customized probes for use in the automotive and other industries.

### Thermal Cutoffs — Page 30
Dependable organic thermal cutoffs in temperatures ranging from 72 °C to 240 °C [162 °F to 464 °F]. They are available in various lead lengths and configurations.

### Thermostats Redi-Temp® — Page 32
Redi-Temp® is a line of standard thermostats offered in a range of pre-set temperatures. These standard products are available for immediate delivery. They are often useful for low-volume applications where standard configurations are acceptable.


**⚠ WARNING**

**MISUSE OF DOCUMENTATION**

- The information presented in this catalogue is for reference only. DO NOT USE this document as product installation information.
- Complete installation, operation and maintenance information is provided in the instructions supplied with each product.

**Failure to comply with these instructions could result in death or serious injury.**


### Thermostats - Commercial — Page 34
Dependable bi-metal thermostats include a choice of automatic or manual reset, phenolic or ceramic housings and a variety of mounting brackets and terminal options.

### Thermostats - Precision — Page 42
Hermetic and non-hermetic thermostats in standard and custom packages for use in a wide variety of precision applications.

### Thermostats - High Reliability — Page 63
Meet the stringent requirements of military and aerospace industries for dielectric strength, moisture resistance, vibration, shock and hermetic seal. These products meet all domestic and international approvals, as well as appropriate military specifications.

### Combi-sensor — Page 65
Liquid pressure/temperature sensor that uses piezoresistive and thermistor sensing technology to measure water pressure and temperature.

### Heaters — Page 66
Wire-wound, chemically-etched, high temperature and transparent heaters in a variety of sizes and geometries.

### Magnetic Position Sensors — Page 68
Hall effect and magnetoresistive sensors for many applications that require accurate, reliable outputs.

### Infrared Products — Page 74
Optoelectronic standard infrared emitting diodes (IREDs), sensors and assemblies for object presence, limit and motion sensing, position encoding and movement encoding.

### Current Sensors — Page 81
Adjustable linear null balance, digital and linear output current sensors for monitoring ac or dc current.

### Liquid Level Sensors — Page 87
Sensitive sensors in a variety of housing types for detecting the presence or absence of a wide range of liquids.

### Basic Switches — Page 89
Standard, miniature and subminiature switches available in a range of enclosures and with a variety of actuators. They are often ideal for use alone or built into assemblies.

### Turbidity Sensors — Page 99
Turbidity sensing aims to provide a quick, practical indication of the relative amount of solids suspended in water or liquids.


**⚠ WARNING**

**PERSONAL INJURY**

DO NOT USE these products as safety or emergency stop devices, or in any other application where failure of the product could result in personal injury

**Failure to comply with these instructions could result in death or serious injury.**

# Pressure Sensors

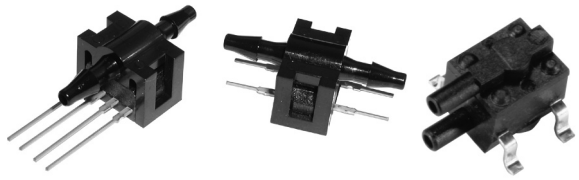

Honeywell pressure sensors are small, low cost and reliable. They promote excellent repeatability, high accuracy and reliability under varying environmental conditions. In addition, they feature highly consistent operating characteristics from one sensor to the next and interchangeability without recalibration.

We offer three pressure sensor measurement types—absolute, differential and gage—including vacuum gage and bidirectional types. A wide variety of pressure ranges, along with both amplified and unamplified versions, are available.

Honeywell pressure sensors are best used in applications which require precision pressure measurement.

## 24PC/26PC Series

**Signal conditioning:** Unamplified noncompensated (24PC Series)
Compensated (26PC Series)
**Supply voltage:** 10 Vdc typ.
12 Vdc max. (24PC Series)
16 Vdc max. (26PC Series)
**Operating temperature:** -40 °C to 85 °C [-40 °F to 185 °F]
**Port style**: Straight or flow through
**Termination:** PCB; 1 x 4; 0.600 in (Type 6)
PCB; 2 x 2; (Type 2)
1 x 4 with connector (Type 5)

## OPTIONS

### Differential

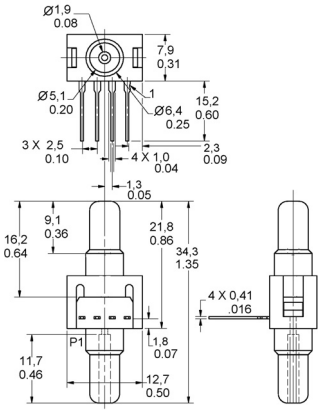


### Gage

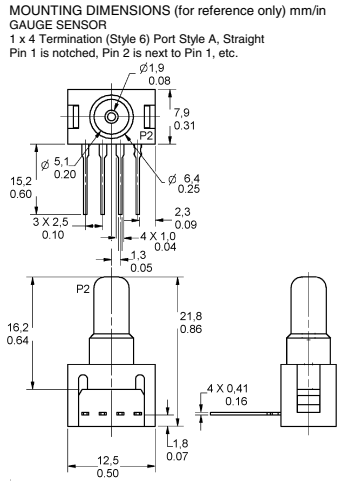


### 24PC Series

| MEASUREMENT TYPE | PRESSURE RANGE | REFERENCE |
|---|---|---|
| Gage/vacuum gage | 1.0 psi | 24PCAFA6G |
| Differential/vacuum gage | 5.0 psi | 24PCBFA6D |
| Gage/vacuum gage | 5.0 psi | 24PCBFA6G |
| Differential/vacuum gage | 15.0 psi | 24PCCFA6D |
| Gage/vacuum gage | 15.0 psi | 24PCCFA6G |
| Differential/vacuum gage | 30.0 psi | 24PCDFA6D |
| Gage/vacuum gage | 30.0 psi | 24PCDFA6G |
| Differential | 0.5 psi | 24PCEFA6D |
| Gage | 0.5 psi | 24PCEFA6G |
| Differential | 100 psi | 24PCFFA6D |
| Gage | 100 psi | 24PCFFA6G |

### 26PC Series

| MEASUREMENT TYPE | PRESSURE RANGE | REFERENCE |
|---|---|---|
| Differential/vacuum gage | 1.0 psi | 26PCAFA6D |
| Gage/vacuum gage | 1.0 psi | 26PCAFA6G |
| Differential | 5.0 psi | 26PCBFA6D |
| Gage | 5.0 psi | 26PCBFA6G |
| Differential/vacuum gage | 15.0 psi | 26PCCFA6D |
| Gage/vacuum gage | 15.0 psi | 26PCCFA6G |
| Differential | 30.0 psi | 26PCDFA6D |
| Gage | 30.0 psi | 26PCDFA6G |
| Gage | 100 psi | 26PCFFA6G |
| Differential | 250 psi | 26PCGFA6D |

### Flow through

**Type 6**

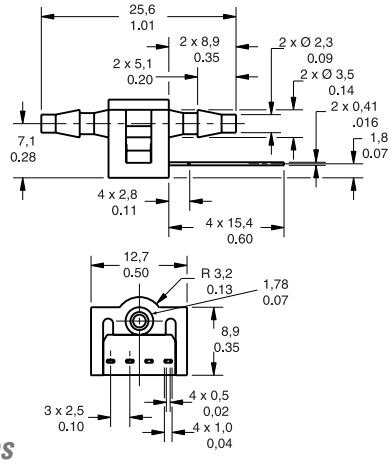


### 24PC Series

| MEASUREMENT TYPE | PRESSURE RANGE | REFERENCE |
|---|---|---|
| Flow through/vacuum gage | 15.0 psi | 24PCCFG6G |
| Flow through/vacuum gage | 30.0 psi | 24PCDFG6G |

### 26PC Series

| MEASUREMENT TYPE | PRESSURE RANGE | REFERENCE |
|---|---|---|
| Flow through/vacuum gage | 1.0 psi | 26PCAFG6G |
| Flow through | 15.0 psi | 26PCCFG6G |
| Gage/vacuum gage | 100 psi | 26PCFFG6G |

## 24PC/26PC Series (continued)

### Type 2

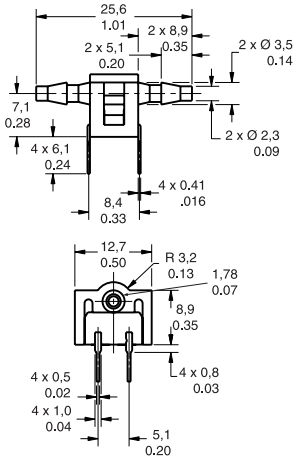


### *26PC Series*

| MEASUREMENT TYPE | PRESSURE RANGE | REFERENCE |
|---|---|---|
| Flow through | 30.0 psi | 26PCDFG2G |

### Type 5

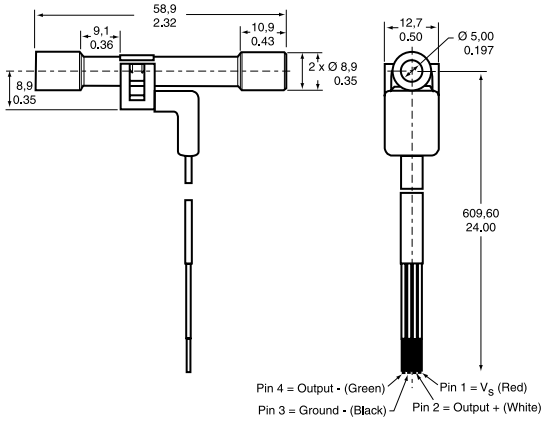


### 26PC Series

| MEASUREMENT TYPE | PRESSURE RANGE | REFERENCE |
|---|---|---|
| Flow through/vacuum gage | 100 psi | 26PCFFU5G |

## 24PC/26PC SMT (Surface-Mount Technology)

**Signal conditioning:** Unamplified noncompensated (24PC SMT Series)
Compensated (26PC SMT Series)
**Supply voltage:** 10 Vdc typ.
12 Vdc max. (24PC SMT Series)
16 Vdc max. (26PC SMT Series)
**Operating temperature:** -40 °C to 85 °C [-40 °F to 185 °F]
**Port style**: Straight, Ø 1,88 mm [0.74 in]
**Termination:** SMT solder
**Measurement type:** Gage, vacuum gage, differential, wet/wet differential

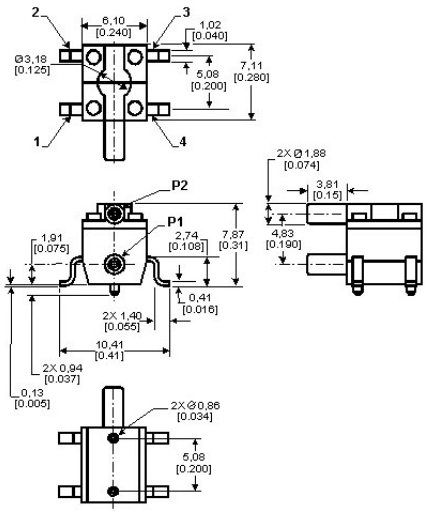


## *OPTIONS*

### *24PC SMT Series*

| PRESSURE RANGE | REFERENCE |
|---|---|
| 0 psi to 1.0 psi | 24PC01SMT |
| 0 psi to 5.0 psi | 24PC05SMT |
| 0 psi to 15.0 psi | 24PC15SMT |

### *26PC SMT Series*

| PRESSURE RANGE | REFERENCE |
|---|---|
| 0 psi to 1.0 psi | 26PC01SMT |
| 0 psi to 5.0 psi | 26PC05SMT |
| 0 psi to 15.0 psi | 26PC15SMT |

## CPC/CPX Series, Low Pressure

**Signal conditioning:** Unamplified
Compensated (CPC Series)
Noncompensated (CPX Series)
**Supply voltage:** 12 Vdc typ., 16 Vdc max.
**Operating temperature:** -25 °C to 85 °C [-13 °F to 185 °F]
**Port style**: Barbed
**Termination:** PCB
**Accuracy grade:** Commercial (1.0 %)

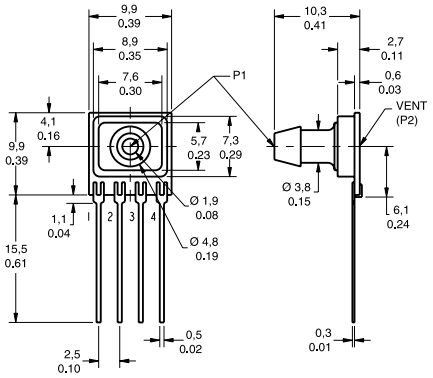

## CPC/CPX Series, Low Pressure (continued)

### OPTIONS

#### CPC Series

| MEASUREMENT TYPE | PRESSURE RANGE | REFERENCE |
|---|---|---|
| Differential | 1.0 psi [4.0 in $H_2O$] | CPCL04DFC |
| Gage | 1.0 psi [4.0 in $H_2O$] | CPCL04GFC |
| Differential | 1.0 psi [10.0 in $H_2O$] | CPCL10DFC |

#### CPX Series

| MEASUREMENT TYPE | PRESSURE RANGE | REFERENCE |
|---|---|---|
| Differential | 4.0 in $H_2O$ | CPXL04DF |
| Differential | 10.0 in $H_2O$ | CPCL10DF |

## DC Series, Low Pressure

**Signal conditioning:** Amplified compensated
Unregulated (DC001NDC4)
Regulated (DC005NDR4)
**Supply voltage:** 5 Vdc typ., 5.1 Vdc max. (DC001NDC4)
7 Vdc to 35 Vdc (DC005NDR4)
**Operating temperature:** -25 °C to 85 °C [-13 °F to 185 °F]
**Port style**: Barbed
**Termination:** PCB

### OPTIONS

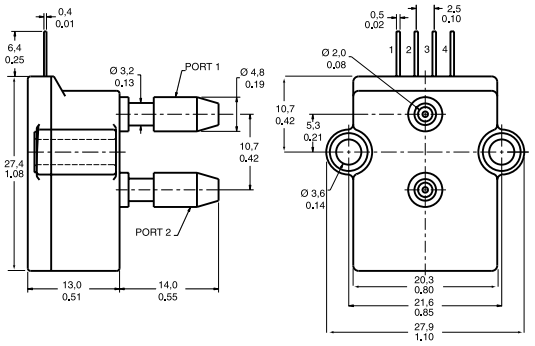


#### DC001NDC4

| MEASUREMENT TYPE | PRESSURE RANGE | REFERENCE |
|---|---|---|
| Differential | 1.0 in $H_2O$ | DC001NDC4 |

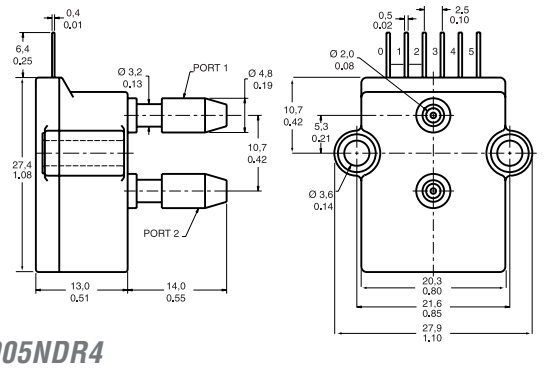


#### DC005NDR4

| MEASUREMENT TYPE | PRESSURE RANGE | REFERENCE |
|---|---|---|
| Differential | 5.0 in $H_2O$ | DC005NDR4 |

## DCXL/DUXL Series, Low Pressure

**Signal conditioning:** Unamplified
Compensated (DCXL)
Noncompensated (DUXL)
**Supply voltage:** 12 Vdc typ., 16 Vdc max. (DCXL)
4.5 Vdc min., 8 Vdc max. (DUXL)
**Operating temperature:** -25 °C to 85 °C [-13 °F to 185 °F]
**Port style**: Barbed
**Termination:** PCB

### OPTIONS

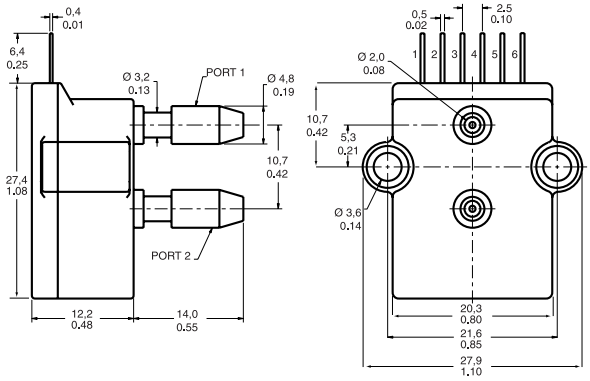


#### DCXL Series

| MEASUREMENT TYPE | PRESSURE RANGE | REFERENCE |
|---|---|---|
| Differential | 1.0 in $H_2O$ | DCXL01DN |
| Differential | 10.0 in $H_2O$ | DCXL10DN |

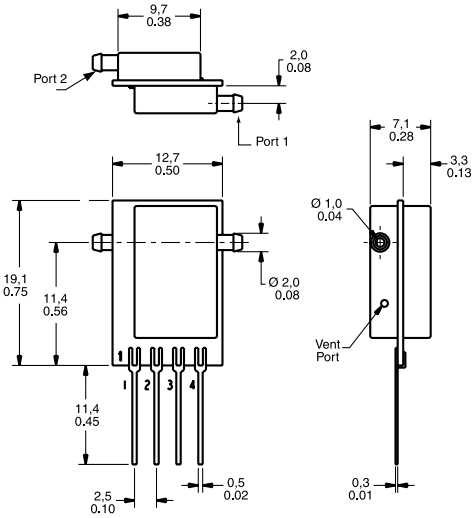


#### DUXL Series

| MEASUREMENT TYPE | PRESSURE RANGE | REFERENCE |
|---|---|---|
| Differential | 1.0 in $H_2O$ | DUXL01D |
| Differential | 10.0 in $H_2O$ | DUXL10D |

## XCA Series

**Signal conditioning:** Amplified compensated
**Supply voltage:** 5 Vdc typ., 16 Vdc max.
**Operating temperature:** -25 °C to 85 °C [-13 °F to 185 °F]
**Port style**: Barbed
**Termination:** PCB

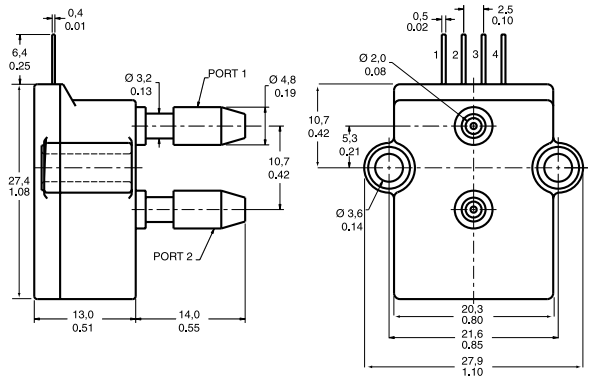


| MEASUREMENT TYPE | PRESSURE RANGE | REFERENCE |
|---|---|---|
| Absolute | 15.0 psia | XCA415AN |

## XCX Series

**Signal conditioning:** Unamplified compensated
**Supply voltage:** 12 Vdc typ., 16 Vdc max.
**Operating temperature:** -25 °C to 85 °C [-13 °F to 185 °F]
**Port style**: Barbed
**Termination:** PCB
**Accuracy grade:** Commercial (1.0 %)

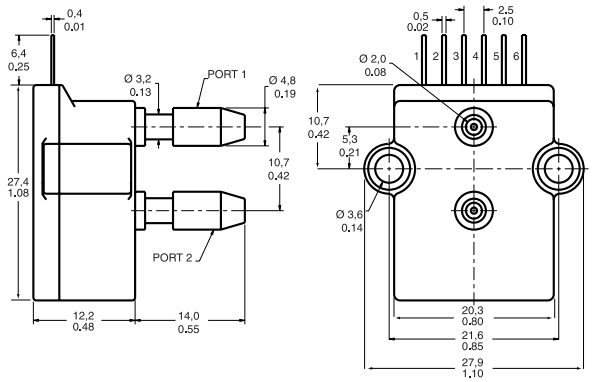


| MEASUREMENT TYPE | PRESSURE RANGE | ACCURACY GRADE | REFERENCE |
|---|---|---|---|
| Differential | 1.0 psi | | XCX01DNC |
| Differential | 1.0 psi | High (0.50 %) | XCX01DNH |
| Differential | 15.0 psi | | XCX15DNC |

## XPC Series

**Signal conditioning:** Unamplified compensated
**Supply voltage:** 12 Vdc typ., 16 Vdc max.
**Operating temperature:** -25 °C to 85 °C [-13 °F to 185 °F]
**Port style**: Barbed
**Termination:** PCB
**Accuracy grade:** Commercial (1.0 %)

**DF Housing**

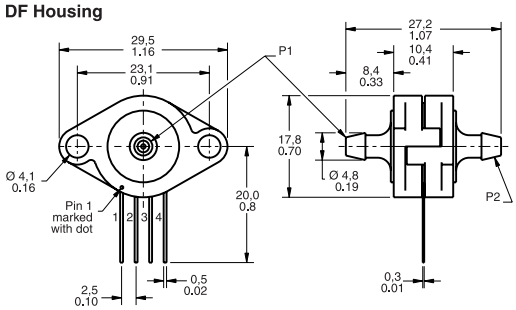


**DT Housing**

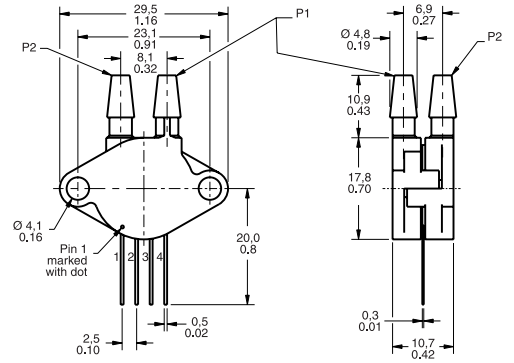


| MEASUREMENT TYPE | PRESSURE RANGE | PORT STYLE | REFERENCE |
|---|---|---|---|
| Differential | 1.0 psi | Axial | XPC01DFC |
| Differential | 15.0 psi | Radial | XPC15DTC |

## XSX Series, Low Pressure

**Signal conditioning:** Unamplified uncompensated
**Supply voltage:** 12 Vdc typ., 16 Vdc max.
**Operating temperature:** -25 °C to 85 °C [-13 °F to 185 °F]
**Port style**: Button
**Termination:** PCB
**Accuracy grade:** Commercial (1.0 %)

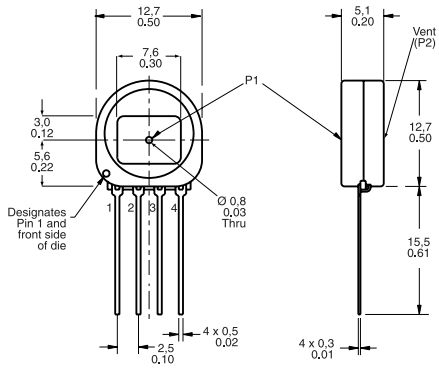


| MEASUREMENT TYPE | PRESSURE RANGE | REFERENCE |
|---|---|---|
| Gage | 4.0 in $H_2O$ | XSXL04GF |

## ASDX Series

**Signal conditioning:** Amplified compensated
**Supply voltage:** 4.75 Vdc to 5.25 Vdc
**Operating temperature:** -20 °C to 105 °C [-4 °F to 221 °F]
**Port style:** Taper 2,29 mm [0.090 in]
**Termination:** PCB
**Accuracy grade:** ±2.0 %

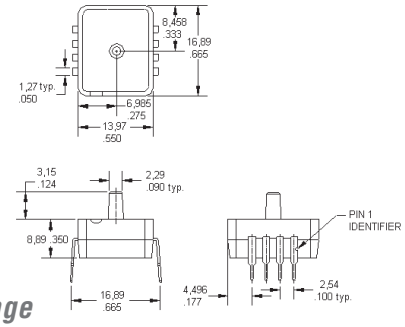


### A2 package

| MEASUREMENT TYPE | PRESSURE RANGE | REFERENCE |
|---|---|---|
| Absolute | 0 psi to 15 psi | ASDX015A24R |
| Absolute | 0 psi to 30 psi | ASDX030A24R |
| Absolute | 0 psi to 100 psi | ASDX100A24R |

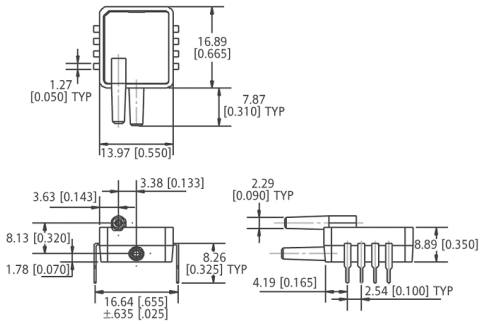


### D4 package

| MEASUREMENT TYPE | PRESSURE RANGE | REFERENCE |
|---|---|---|
| Differential/gage | 0 psi to 1 psi | ASDX001D44R |
| Differential/gage | 0 psi to 5 psi | ASDX005D44R |
| Differential/gage | 0 psi to 15 psi | ASDX015D44R |
| Differential/gage | 0 psi to 30 psi | ASDX030D44R |
| Differential/gage | 0 psi to 100 psi | ASDX100D44R |

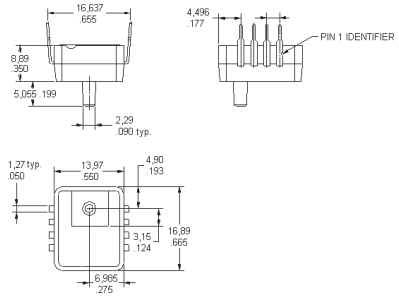


### G2 package

| MEASUREMENT TYPE | PRESSURE RANGE | REFERENCE |
|---|---|---|
| Gage | 0 psi to 1 psi | ASDX001G24R |
| Gage | 0 psi to 5 psi | ASDX005G24R |
| Gage | 0 psi to 15 psi | ASDX015G24R |
| Gage | 0 psi to 30 psi | ASDX030G24R |
| Gage | 0 psi to 100 psi | ASDX100G24R |

## ASDX DO (Digital Output) Series

**Signal conditioning:** Amplified
**Supply voltage:** 4.75 Vdc to 5.25 Vdc
**Operating temperature:** -20 °C to 105 °C [-4 °F to 221 °F]
**Port style:** Taper 2,29 mm [0.090 in]
**Termination:** PCB
**Accuracy grade:** ±2.0 %

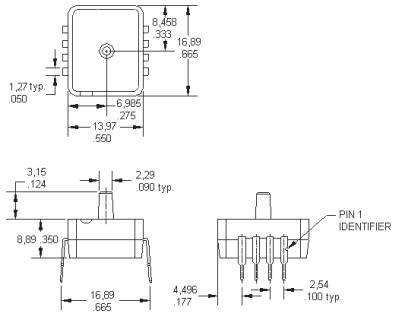


### A2 package

| MEASUREMENT TYPE | PRESSURE RANGE | REFERENCE |
|---|---|---|
| Absolute | 0 psi to 15 psi | ASDX015A24R-DO |
| Absolute | 0 psi to 30 psi | ASDX030A24R-DO |
| Absolute | 0 psi to 100 psi | ASDX100A24R-DO |

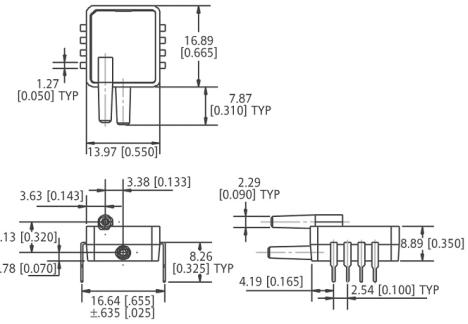


### D4 package

| MEASUREMENT TYPE | PRESSURE RANGE | REFERENCE |
|---|---|---|
| Differential/gage | 0 psi to 1 psi | ASDX001D44R-DO |
| Differential/gage | 0 psi to 1 psi | ASDX001D44D-DO |
| Differential/gage | 0 psi to 5 psi | ASDX005D44R-DO |
| Differential/gage | 0 psi to 5 psi | ASDX005D44D-DO |
| Differential/gage | 0 psi to 15 psi | ASDX015D44R-DO |
| Differential/gage | 0 psi to 15 psi | ASDX015D44D-DO |
| Differential/gage | 0 psi to 30 psi | ASDX030D44R-DO |
| Differential/gage | 0 psi to 30 psi | ASDX030D44D-DO |
| Differential/gage | 0 psi to 100 psi | ASDX100D44R-DO |

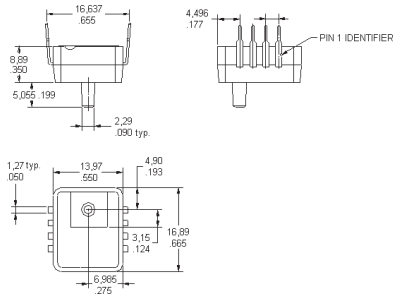


### G2 package

| MEASUREMENT TYPE | PRESSURE RANGE | REFERENCE |
|---|---|---|
| Gage | 0 psi to 1 psi | ASDX001G24R-DO |
| Gage | 0 psi to 5 psi | ASDX005G24R-DO |
| Gage | 0 psi to 15 psi | ASDX015G24R-DO |
| Gage | 0 psi to 30 psi | ASDX030G24R-DO |
| Gage | 0 psi to 100 psi | ASDX100G24R-DO |

## ASDXL Series

**Signal conditioning:** Amplified
**Output signal:** 0.5 Vdc to 4.5 Vdc
**Operating temperature:** Compensated 0 °C to 85 °C [32 °F to 185 °F]
**Port style:** Taper 2,29 mm [0.090 in]
**Termination:** PCB
**Accuracy grade:** 2.0 %

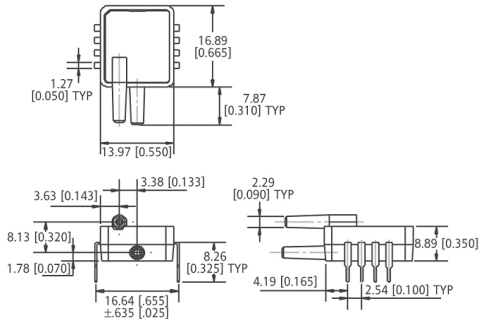


### D4 package

| MEASUREMENT TYPE | PRESSURE RANGE | REFERENCE |
|---|---|---|
| Bidirectional | ±5 in $H_2O$ | ASDXL005D44D |
| Bidirectional | 0 in to 10 in $H_2O$ | ASDXL010D44D |
| Differential | 0 in to 10 in $H_2O$ | ASDXL010D44R |

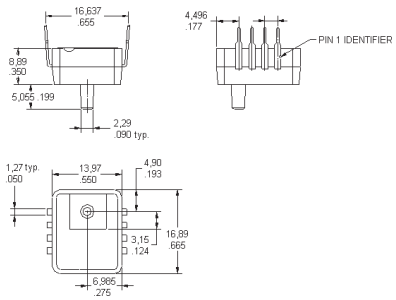


### G2 package

| MEASUREMENT TYPE | PRESSURE RANGE | REFERENCE |
|---|---|---|
| Gage | 0 in to 10 in $H_2O$ | ASDXL010G24R |

## ASDXL DO (Digital Output) Series

**Signal conditioning:** Amplified
**Output signal:** HEX E25 to EA8
**Operating temperature:** Compensated 0 °C to 85 °C [32 °F to 185 °F]
**Port style:** Taper 2,29 mm [0.090 in]
**Termination:** PCB
**Accuracy grade:** 2.0 %

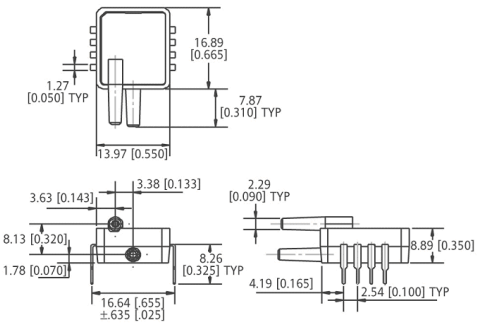


### D4 package

| MEASUREMENT TYPE | PRESSURE RANGE | REFERENCE |
|---|---|---|
| Bidirectional | ±5 in $H_2O$ | ASDXL005D44D-DO |
| Bidirectional | ±10 in $H_2O$ | ASDXL010D44D-DO |
| Differential | 0 in to 10 in $H_2O$ | ASDXL010D44R-DO |

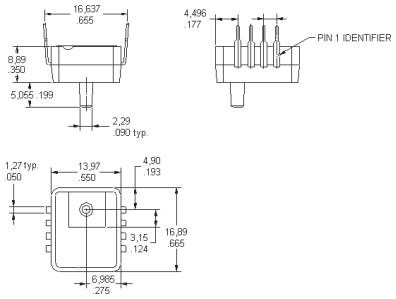


### G2 package

| MEASUREMENT TYPE | PRESSURE RANGE | REFERENCE |
|---|---|---|
| Gage | 0 in to 10 in $H_2O$ | ASDXL010G25R-DO |

## 140PC Series

**Signal conditioning:** Amplified
**Supply voltage:** 8 Vdc typ., 16 Vdc max.
**Operating temperature:** -40 °C to 85 °C [-40 °F to 185 °F]
**Port style**: Straight
**Termination:** PCB

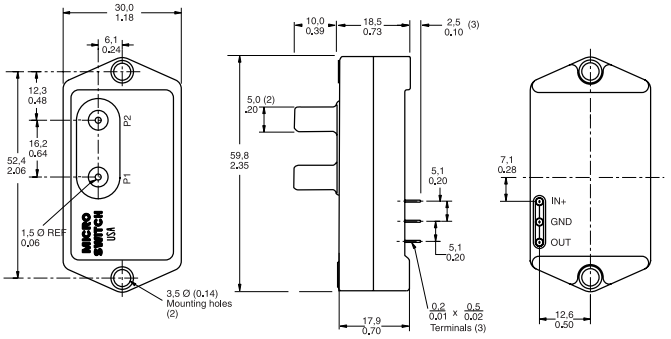


***Note:*** *Dimensions shown apply to Differential and Absolute versions. Gage units are identical, except the P1 port is absent.*

| MEASUREMENT TYPE | PRESSURE RANGE | TERMINATION | REFERENCE |
|---|---|---|---|
| Gage/vacuum gage | 15 psi | | 141PC15G |
| Differential/vacuum gage | 1.0 psi | | 142PC01D |
| Gage | 1.0 psi | | 142PC01G |
| Gage | 2.0 psi | | 142PC02G |
| Differential/vacuum gage | 5.0 psi | | 142PC05D |
| Differential/vacuum gage | -39 in $H_2O$ to 55 in $H_2O$ | | 142PC05D97 |
| Gage | 5.0 psi | | 142PC05G |
| Absolute | 15 psia | | 142PC15A |
| Absolute | 15 psia | Leadwire | 142PC15AW95 |
| Gage | 15 psi | | 142PC15G |
| Differential/vacuum gage | ±2.5 psi | | 143PC03D |
| Differential/vacuum gage | ±5.0 psi | Leadwire | 143PC05DW |

## 160PC Series, Low Pressure

**Signal conditioning:** Amplified
**Supply voltage:** 8 Vdc typ., 16 Vdc max.
**Operating temperature:** -40 °C to 85 °C [-40 °F to 185 °F]
**Port style**: Straight
**Termination:** PCB

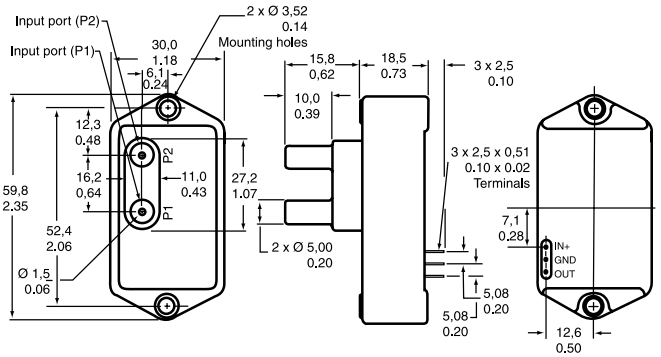


***Note:*** *Dimensions shown apply to Differential and Absolute versions. Gage units are identical, except the P1 port is absent.*

| MEASUREMENT TYPE | PRESSURE RANGE | SUPPLY VOLTAGE | REFERENCE |
|---|---|---|---|
| Differential/vacuum gage | 0 in to 27.68 in $H_2O$ | | 162PC01D |
| Differential/vacuum gage | ±5.0 in $H_2O$ | | 163PC01D36 |
| Differential/vacuum gage | -20 cm to 120 cm $H_2O$ | | 163PC01D48 |
| Differential/vacuum gage | -20 cm to 120 cm $H_2O$ | 5 Vdc | 163PC01D61 |
| Differential/vacuum gage | ±2.5 in $H_2O$ | | 163PC01D75 |
| Differential/vacuum gage | 10.0 in $H_2O$ | | 164PC01D37 |
| Differential/vacuum gage | 5.0 in $H_2O$ | | 164PC01D76 |

## SDX Series

**Signal conditioning:** Calibrated zero and span
**Supply voltage:** 20 Vdc
**Operating temperature:** Calibrated 0 °C to 50 °C [32 °F to 122 °F]
**Port style**: Straight
**Termination:** PCB

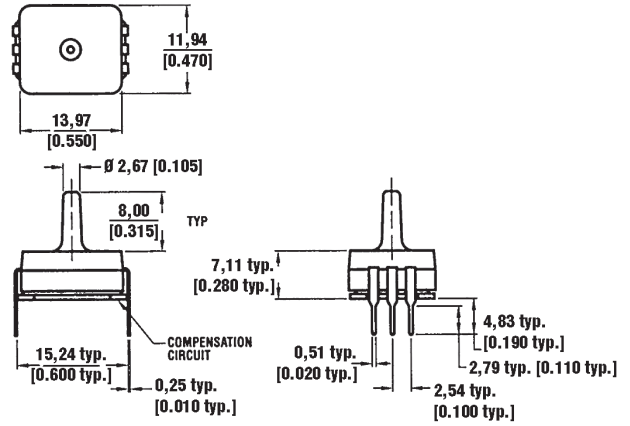


### *A2/G2 package*

| MEASUREMENT TYPE | PRESSURE RANGE | REFERENCE |
|---|---|---|
| Gage | 0 psi to 5 psi | SDX05G2 |
| Absolute | 0 psi to 15 psi | SDX15A2 |

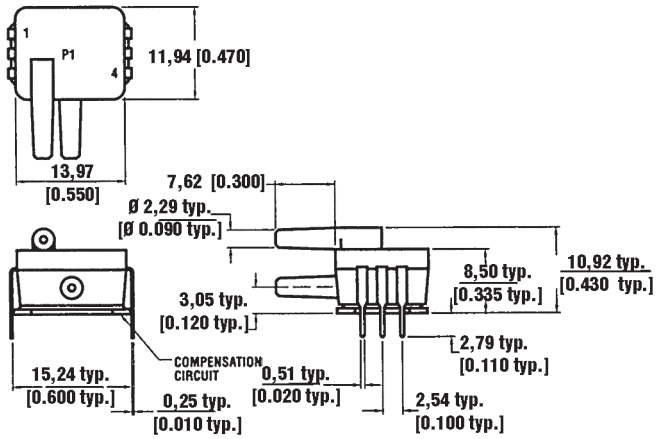


### *D4 package*

| MEASUREMENT TYPE | PRESSURE RANGE | REFERENCE |
|---|---|---|
| Differential | 0 psi to 1 psi | SDX01D4 |
| Differential | 0 psi to 5 psi | SDX05D4 |
| Differential | 0 psi to 15 psi | SDX15D4-A |

## SDX IND Series

**Signal conditioning:** Calibrated zero and span
**Supply voltage:** 20 Vdc
**Operating temperature:** Calibrated 0 °C to 50 °C [32 °F to 122 °F]
**Port style**: Straight
**Termination:** PCB

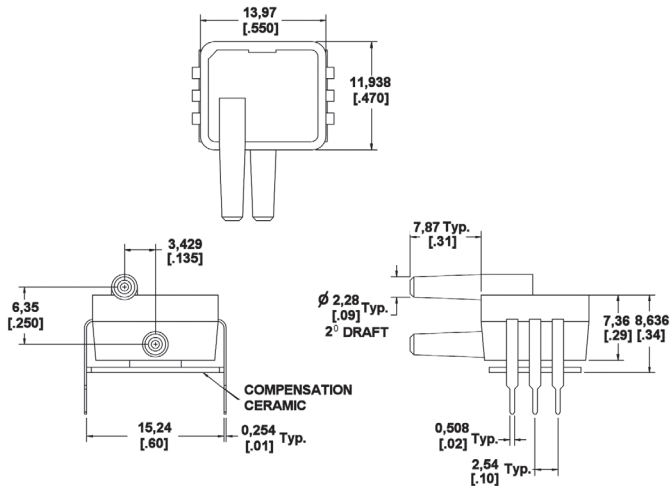


| MEASUREMENT TYPE | PRESSURE RANGE | REFERENCE |
|---|---|---|
| Differential | 0 in $H_2O$ to 5 in $H_2O$ | SDX005IND4 |
| Differential | 0 in $H_2O$ to 10 in $H_2O$ | SDX010IND4 |

## HPX Series

**Signal conditioning:** None
**Supply voltage:** 3 Vdc typ., 10 Vdc max.
**Operating temperature:** -20 °C to 100 °C [-4 °F to 212 °F]
**Termination:** PCB

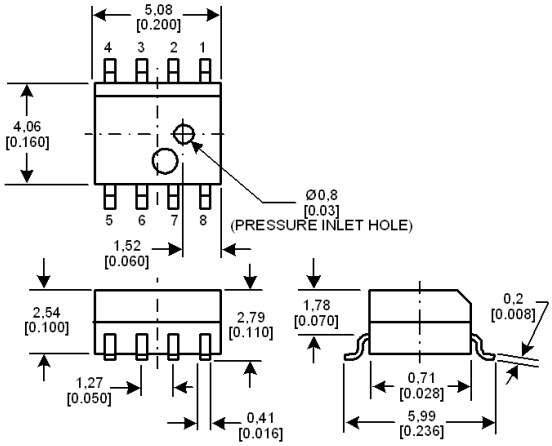


### *SOIC package*

| MEASUREMENT TYPE | PRESSURE RANGE | REFERENCE |
|---|---|---|
| Absolute | 0 psi to 15 psi | HPX015AS |
| Absolute | 0 psi to 30 psi | HPX030AS |
| Absolute | 0 psi to 50 psi | HPX050AS |
| Absolute | 0 psi to 100 psi | HPX100AS |

## 40PC Series, Miniature Signal Conditioned

**Signal conditioning:** Amplified
**Supply voltage:** 5 Vdc ±0.25 Vdc
**Operating temperature:** -45 °C to 125 °C [-49 °F to 257 °F]
**Port style**: Straight for O-ring interface
**Termination:** PCB, unformed

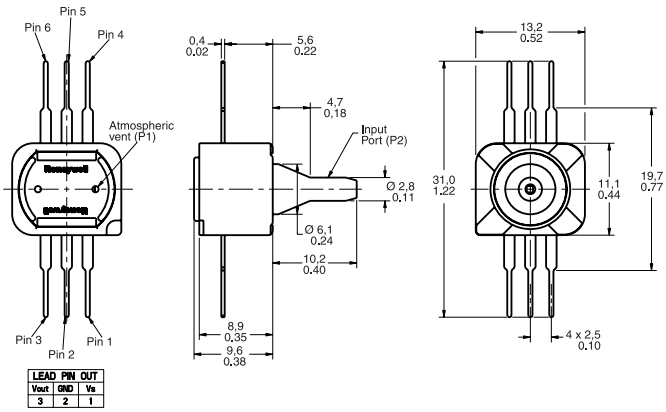


| MEASUREMENT TYPE | PRESSURE RANGE | REFERENCE |
|---|---|---|
| Bi-directional gage/vacuum gage | ±50 mm Hg | 40PC001B1A |
| Gage | 0 to 300 mm HG | 40PC006G1A |
| Vacuum | 0 to -15.0 psi | 40PC015V1A |
| Gage | 15.0 psi | 40PC015G1A |
| Gage | 30.0 psi | 40PC030G1A |
| Gage | 100 psi | 40PC100G1A |
| Gage | 150 psi | 40PC150G1A |
| Gage | 250 psi | 40PC250G1A |
| Gage | 500 psi | 40PC500G1A |

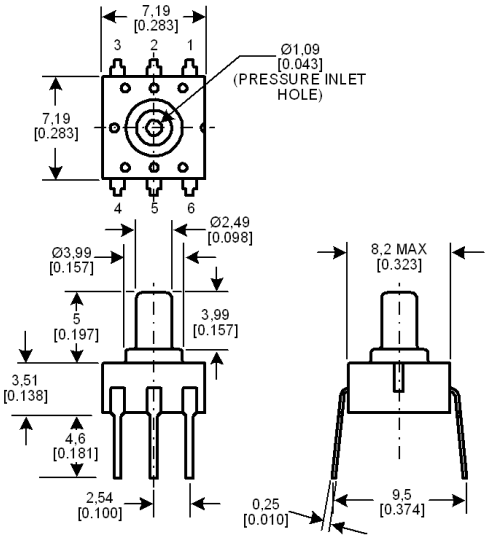


### *DIP package*

| MEASUREMENT TYPE | PRESSURE RANGE | REFERENCE |
|---|---|---|
| Gage | 0 psi to 5.8 psi | HPX005GD |
| Gage | 0 psi to 15 psi | HPX015GD |
| Gage | 0 psi to 30 psi | HPX030GD |
| Gage | 0 psi to 50 psi | HPX050GD |
| Gage | 0 psi to 100 psi | HPX100GD |

# HSD Series

**Signal conditioning:** Amplified
**Supply voltage:** 3.0 Vdc ±0.01 Vdc
**Operating temperature:** -20 °C to 105 °C [-4 °F to 221 °F]
**Output signal**: HEX E25 to EA8
**Termination:** OCLPP (Open Cavity Leadless Plastic Package)

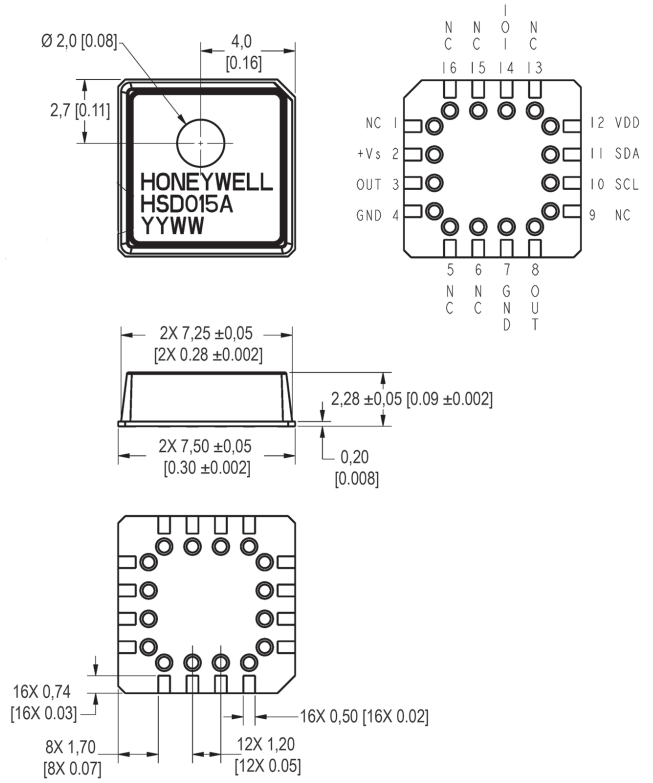


| MEASUREMENT TYPE | PRESSURE RANGE | REFERENCE |
|---|---|---|
| Absolute | 0 psi to 15 psi | HSD015A |

# Mass Airflow Sensors

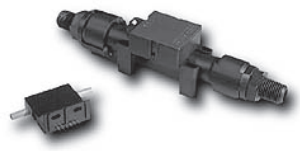

Mass Airflow sensors contain a thin-film, thermally isolated bridge structure that consists of a heater and temperature sensing elements. The bridge structure promotes sensitivity and fast response to the flow of air or other gas over the chip.

State-of-the-art chip design and manufacturing techniques allow the microbridge to be sensitive, fast and small. Used in appropriate applications where airflow needs to be measured.

**Supply voltage:** 8 Vdc to 15 Vdc
**Operating temperature:** -25 °C to 85 °C [-13 °F to 185 °F]
**Media compatibility:** Dry gas only

## AWM2000 Series

The AWM2000 Series microbridge mass airflow sensor is a passive device comprised of two Wheatstone bridges and has bidirectional sensing capability. The heater control circuit is required for operation per specifications. The sensing bridge supply circuit is also required for operation per specifications. These two circuits are not on board the package and must be supplied in the application. The differential amplifier is often a useful interface for the sensing bridge. It can be used to introduce gain and to voltage offsets to the sensor output.

**Signal conditioning:** Unamplified (-44.5 mVdc to 44.5 mVdc)
**Port style:** Straight
**Sensor resistance:** 5 kOhm

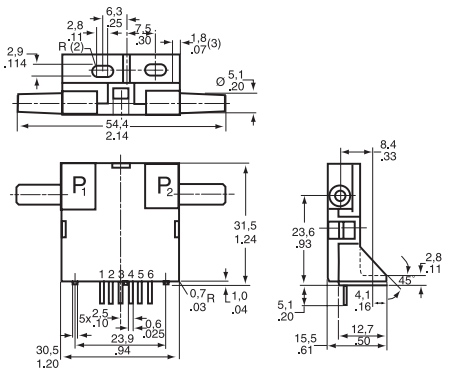


| FLOW/PRESSURE RANGE | REFERENCE |
|---|---|
| ±200 sccm | AWM2100V |
| ±4.0 in $H_2O$ (10 mBar) | AWM2200V |
| ±1000 sccm (1 SLPM) | AWM2300V |

## AWM3000 Series

Like the AWM2000 Series, the dual Wheatstone bridges control airflow measurement. The AWM3000 Series is amplified; therefore, it can be used to increase the gain and to introduce voltage offsets to the sensor output. The heater control circuit and the sensing bridge supply circuit are on board the package.

**Signal conditioning:** Amplified (1 Vdc to 5 Vdc)
**Port style:** Straight

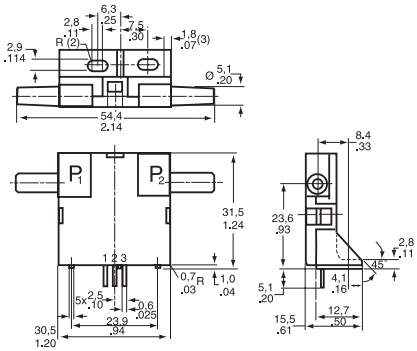


| FLOW/PRESSURE RANGE | REFERENCE |
|---|---|
| ±200 cm | AWM3100V |
| +2.0 in $H_2O$ (5 mBar) | AWM3200V |
| ±1000 sccm (1 SLPM) | AWM3300V |

## AWM40000 Series

The microbridge mass airflow sensor operates on the theory of heat transfer. Mass airflow is directed across the surface of the sensing elements. Output voltage varies in proportion to the mass air or other gas flow through the inlet and outlet ports of the package. The specially designed housing precisely directs and controls the airflow across the microstructure sensing element. Mechanical design of the package typically allows it to be easily mounted to printed circuit boards.

The microbridge mass airflow sensor has a unique silicon chip based on advanced microstructure technology. It consists of a thin-film, thermally isolated bridge structure containing heater and temperature sensing elements. The bridge structure provides a sensitive and fast response to the flow of air or other gas over the chip. Dual sensing elements positioned on both sides of a central heating element indicate flow direction as well as flow rate. Laser trimmed thick film and thin film resistors provide consistent interchangeability from one device to the next.

**Port style:** Manifold

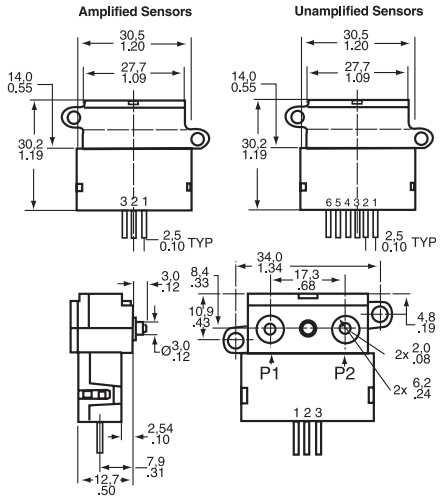


| SIGNAL CONDITIONING | FLOW/PRESSURE RANGE | REFERENCE |
|---|---|---|
| Unamplified (8.5 mV) | ±25 sccm | AWM42150VH |
| Unamplified (54.7 mV) | ±1000 sccm (1 SLPM) | AWM42300V |
| Amplified (1 Vdc to 5 Vdc) | ±1000 sccm (1 SLPM) | AWM43300V |
| Amplified (1 Vdc to 5 Vdc) | + 6 SLPM | AWM43600V |

## AWM5000 Series - High Flow

AWM5000 Series microbridge mass airflow sensors feature a venturi type flow housing. They measure flow as high as 20 standard liters per minute (SLPM) while inducing a maximum pressure drop of 2.25 in $H_2O$. The microbridge chip is in direct contact with the flow stream, greatly reducing error possibilities due to orifice or bypass channel clogging.

The rugged plastic package has been designed to withstand common mode pressures up to 50 psi, and the small sensing element allows 100 g of shock without compromising performance. The included "AMP" compatible connector provides reliable connection in many demanding applications.

Each AWM5000 sensor contains circuitry which performs amplification, linearization, temperature compensation and gas calibration. A 1 Vdc to 5 Vdc linear output is possible for all listings regardless of flow range (5, 10, 15, or 20 SLPM) or calibration gas (nitrogen, carbon dioxide, nitrous oxide or argon). All calibration is performed by active laser.

**Signal conditioning:** Amplified (1 Vdc to 5 Vdc)
**Port style:** Threaded, ¼ in NPT

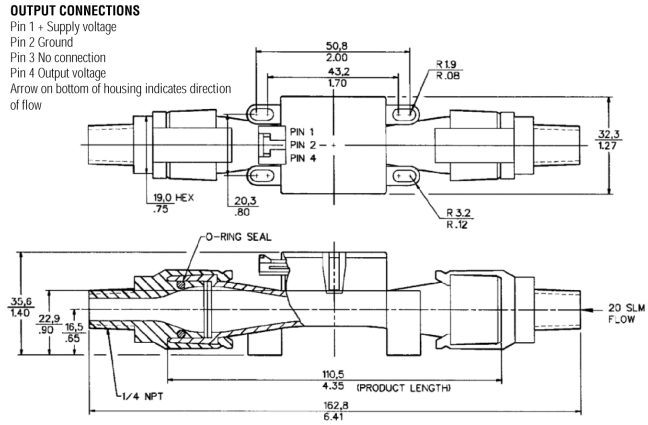


| FLOW/PRESSURE RANGE | REFERENCE |
|---|---|
| 0 SLPM to 5 SLPM ($N_2$ calibration) | AWM5101VN |
| 0 SLPM TO 10 SLPM ($N_2$ calibration) | AWM5102VN |
| 0 SLPM to 20 SLPM ($CO_2$ calibration) | AWM5104VC |
| 0 SLPM to 20 SLPM ($N_2$ calibration) | AWM5104VN |

### CAUTION

**PRODUCT DAMAGE**

AWM Series Microbridge Mass Airflow Sensors are not designed to sense liquid flow and will be damaged by liquid flow through the sensor.

**Failure to comply with these instructions could result in product damage.**

## AWM700 Series

AWM700 Series microbridge mass airflow sensors provide in-line flow measurement with a specially designed bypass flow housing. The sensors measure flow as high as 200 standard litres per minute (SLPM) while inducing a pressure drop of 1 inch $H_2O$, typically. The AWM700 has a high flow range capability in a small package.

**Signal conditioning:** Amplified (1 Vdc to 5 Vdc)
**Port style:** Tapered, 22 mm

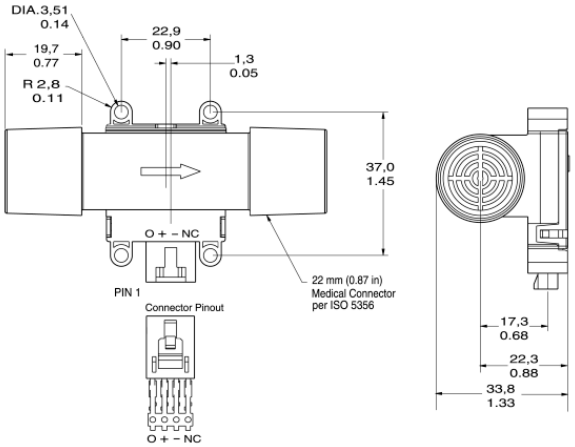


| FLOW/PRESSURE RANGE | REFERENCE |
|---|---|
| + 200 SLPM | AWM720P1 |

## AWM90000 Series

The AWM90000 Series microbridge mass airflow sensors are available in two versions, mass flow and differential pressure. The AWM92100V has a flow range of ±200 sccm with a pressure drop of only 0.49 mBar, typically. The AWM92200V is a differential pressure version that has a range of ±2 in $H_2O$.

The AWM90000 Series has a 1 ms response time, operates with a supply voltage from 8.0 Vdc to 15.0 Vdc, while consuming only 50 mW of power. The compact plastic package will withstand a maximum overpressure of 25 psi without compromising performance.

**Signal Conditioning:** Unamplified
**Port Style:** Straight

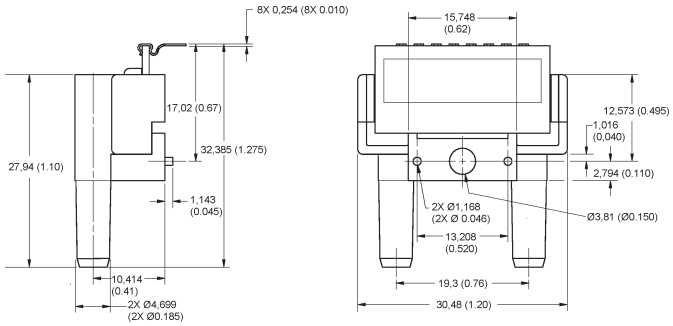


| FLOW RANGE (FULL SCALE) | PRESSURE RANGE | REFERENCE |
|---|---|---|
| ±200 SCCM | | AWM92100V |
| | ±2.0 $H_2O$ (5 mBar) | AWM92200V |

### NOTICE

**LAMINAR FLOW**

Due to the fast response time of the sensor, these specifications were generated using laminar flow. Airflow instability or "turbulence" present in the airstream will result in an increase in measurement uncertainty.

The turbulent flow problem can be corrected by either straightening the airflow using flow laminarizing or by slowing the response of the sensor using a simple RC time constant on the output of the sensor. This, of course, slows down the sensor response time. The values needed depend on the amount of turbulence present in the application.

Several techniques for laminarizing the flow include adding hex shaped honeycombs, foam, screen materials or adding constrictors (frits) to the flow stream. There are various commercial laminar flow elements that can be purchased. Unfortunately the greater the efficiency of the laminarizer, the greater the increase in pressure drop in order to establish a given flow rate. Plastic honeycomb material probably gives the most improvement for the least pressure drop. In any test fixture, the avoidance of sharp radii is an absolute requirement.

### CAUTION

**PRODUCT DAMAGE**

AWM Series Microbridge Mass Airflow Sensors are not designed to sense liquid flow and will be damaged by liquid flow through the sensor.

**Failure to comply with these instructions could result in product**

# Force Sensors

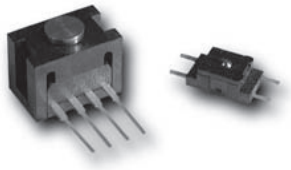

Force sensors operate on the principle that the resistance of silicon-implanted piezoresistors will increase when the resistors flex under any applied force. The sensor concentrates force from the application, through the stainless steel plunger, directly to the silicon sensing element. The amount of resistance changes in proportion to the amount of force being applied. This change in circuit resistance results in a corresponding mV output level.

## FSG Series

**Supply voltage:** 360 mV span @ 10 Vdc
**Operating temperature:** -40 °C to 85 °C [-40 °F to 185 °F]
**Sensitivity:** 0.20 mV/g min., 0.24 mV/g typ., 0.28 mV/g max.
**Overforce:** 5500 g

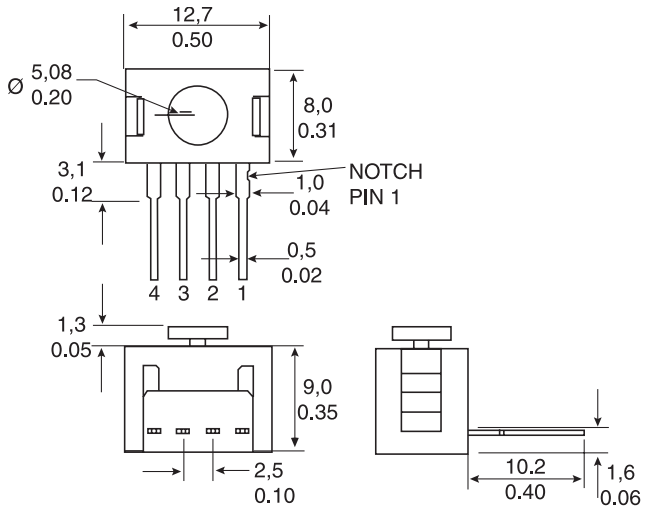


*Plunger actuator - force range 1500 g*

| | REFERENCE |
|---|---|
| Non-compensated | FSG15N1A |

## FSL Series

**Supply voltage:** 60 mV span @ 5 Vdc
**Operating temperature:** -40 °C to 85 °C [-40 °F to 185 °F]
**Sensitivity:** 0.10 mV/g min., 0.12 mV/g typ., 0.14 mV/g max.
**Overforce:** 4500 g

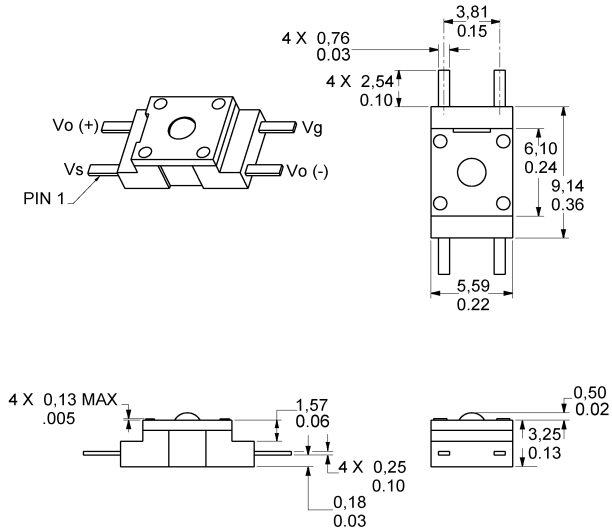


*Ball bearing actuator - force range 500 g*

| | REFERENCE |
|---|---|
| Non-compensated | FSG15N1A |

## Model 1865 Force/Pressure Transducer

Model 1865 is a high-performance transducer specifically designed to address the needs of certain medical and specialized OEM applications. Offering laser-trimmed compensation, Model 1865 may be specified to operate with either a constant current or voltage supply.

Model 1865 employs a solid state piezoresistive pressure transducer mounted in a plastic package. For applications where force is applied by a flexible membrane to the sensor, such as found in infusion pumps, Model 1865's precision height silicone diaphragm provides long life and is often a reliable replacement for older force or load cell transducers. Utilizing a silicon rubber diaphragm, Model 1865 is compatible with some liquid media applications. Model 1865 may be operated in either current or voltage excitation, and its output may be amplified or signal conditioned, as required. The semiconductor-based sensor offers high resolution using its Wheatstone bridge strain gage design. The height of the unit's patented, poured-in-place silicon rubber diaphragm is controlled to promote sensitivity to low pressure. This diaphragm is bonded to a plastic header and transmits force applied through a special silicone gel to the diaphragm of a silicon piezoresistive die. The back of the die is exposed to atmospheric pressure, which results in a gage pressure output.

**Pressure over-range protection:** 3X span or 60 psi, whichever is least
**Media/materials compatibility**
**Top side:** Room atmosphere, directly applied force, and liquids compatible with dimethyl silicon, polyetherimide (Ultem®)
**Bottom side:** Non-corrosive dry gasses and fluids compatible with silicon, pyrex, RTV silicone and ceramic
**Sensor:** Gage pressure
**Diaphragm:** Dimethyl silicone
**Compensation:** Laser-trimmed normalized output

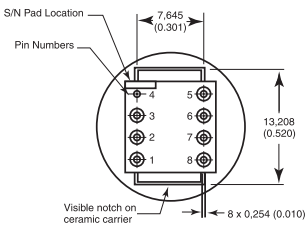


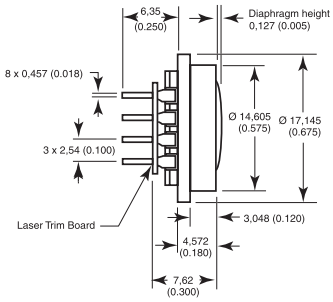


### *OPTIONS*

#### *Excitation 1.5 mA*

| PRESSURE | REFERENCE |
|---|---|
| 0 psi to 5 psi | 1865-01G-L-N |
| 0 psi to 10 psi | 1865-02G-L-N |
| 0 psi to 15 psi | 1865-03G-L-N |
| 0 psi to 25 psi | 1865-04G-L-N |
| 0 psi to 30 psi | 1865-05G-L-N |

#### *Excitation 10 Vdc*

| PRESSURE | REFERENCE |
|---|---|
| 0 psi to 5 psi | 1865-01G-K-N |
| 0 psi to 10 psi | 1865-02G-K-N |
| 0 psi to 15 psi | 1865-03G-K-N |
| 0 psi to 25 psi | 1865-04G-K-N |
| 0 psi to 30 psi | 1865-05G-K-N |

## FS Series Force/Pressure Sensor

The FS01/FS03 Sensors are special low-cost, peizoresistive-based force sensors. These high-level voltage output, calibrated and temperature- compensated sensors give an accurate and stable output over a 5 °C to 50 °C [41 °F to 122 °F] temperature range. They offer simple operation from a single 5.0 Vdc supply. The FS01/FS03 sensors feature an integrated circuit sensor element and laser-trimmed, thick-film ceramic in a small plastic housing. Their extremely small size often enables the use of multiple sensors in limited available space. This package also provides excellent corrosion resistance and isolation to external package stress.

**Supply voltage:** 12.0 Vdc
**Operating temperature:** 0 °C to 70 °C [32 °F to 158 °F]
**Maximum force:** 7 lb

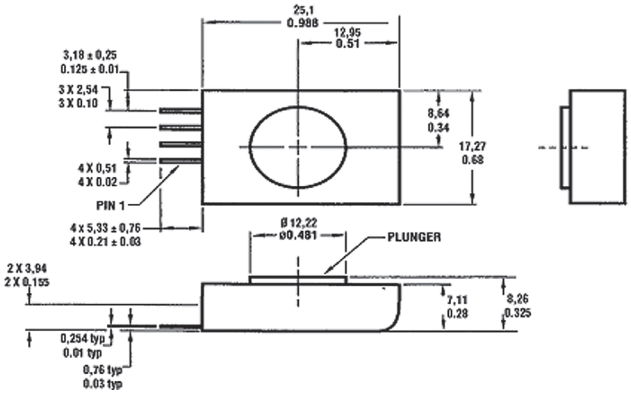


| PRESSURE | REFERENCE |
|---|---|
| 0 lb to 1.5 lb | FS01 |
| 0 lb to 3.0 lb | FS03 |

# Humidity Sensors

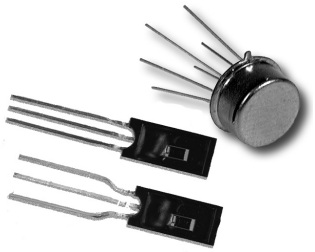

Relative Humidity/Temperature and Relative Humidity sensors are configured with integrated circuitry to provide on-chip signal conditioning. These sensors contain a capacitive sensing die set in thermoset polymers that interacts with platinum electrodes. The laser trimmed sensors have an interchangeability of ±5 % from 0 %RH to 60 %RH, with stable, low drift performance.

Absorption based humidity sensors provide both temperature and %RH (Relative Humidity) outputs. On-chip signal processing ensures linear voltage output versus %RH. Sensor laser trimming offers accuracy of ± 2.5 %, and achieves 2 %RH accuracy with calibration.

**Supply voltage:** 4.0 Vdc to 5.8 Vdc
**Operating humidity range:** 0 %RH to 100 %RH, non-condensing
**Operating temperature range:** -40 °C to 85 °C [-40 °F to 185 °F]

## HIH-4000 Series

The HIH-4000 Series humidity sensors are designed specifically for high volume OEM users. Direct input to a controller or other device is made possible by this sensor's linear voltage output. With a typical current draw of only 200 µA, the HIH-4000 Series is often ideally suited for low drain, battery operated systems. Tight sensor interchangeability reduces or eliminates OEM production calibration costs. Individual sensor calibration data is available.

These sensors deliver instrumentation-quality RH sensing performance in a competitively priced, solderable SIP. Available in two lead spacing configurations, the RH sensor is a laser trimmed, thermoset polymer capacitive sensing element with on-chip integrated signal conditioning.

**Package style:** Solderable SIP

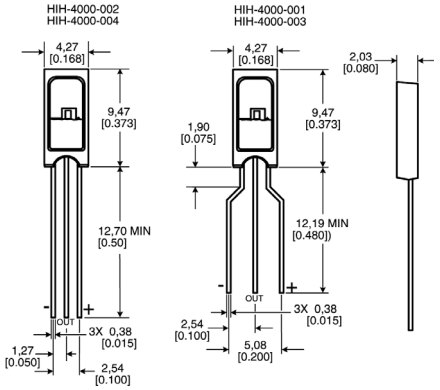


| TERMINATION | CALIBRATION | REFERENCE |
|---|---|---|
| 2,54 mm [0.100 in] lead pitch | None | HIH-4000-001 |
| 1,27 mm [0.050 in] lead pitch | None | HIH-4000-002 |
| 2,54 mm [0.100 in] lead pitch | with calibration and data printout | HIH-4000-003 |
| 1,27 mm [0.050 in] lead pitch | with calibration and data printout | HIH-4000-004 |

## HIH Series

### *HIH-3602 Monolithic integrated circuit*

HIH-3602-A and HIH-3602-C RH sensors combine both relative humidity and temperature sensing in a TO-5 housing with a hydrophobic sintered stainless steel filter. The temperature sensor is thermally connected with the RH sensor making the HIH-3602-A/C often ideal for measuring dew point and other absolute moisture terms.

**Package style:** TO-5 can
**Termination:** 0,46 mm [0.18 in]
**NIST certification:** NIST calibration sensor-specific printout

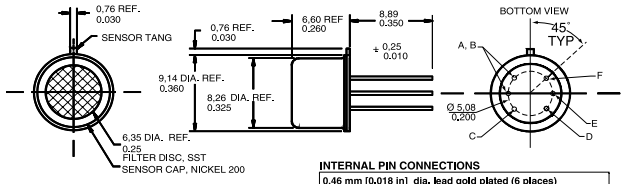


**INTERNAL PIN CONNECTIONS**

| 0,46 mm [0.018 in] dia. lead gold plated (6 places) | |
|---|---|
| A, B | (HIH-3602-A) Thermistor for temperature compensation |
| A, B | (HIH-3602-C) RTD for temperature compensation |
| C | +VDC supply |
| D | (-) Power or ground |
| E | VDC out |
| F | Case ground |

| TEMPERATURE SENSOR | REFERENCE |
|---|---|
| 100 kOhm ±5 % @ 25 °C, NTC 0-50 C | HIH-3602-A |
| 1000 Ohm ±0.2 % @ 0 °C, platinum RTD | HIH-3602-C |

### *HIH-3602-L Integrated circuit*

The HIH-3602-L Relative Humidity (RH) sensor delivers instrumentation-quality RH sensing performance in a rugged, low cost, slotted TO-39 housing. On-board signal conditioning reduces product development times while a typical current draw of only 200 µA makes the HIH-3602-L perfect for battery powered systems. This sensor should be shielded from bright light.

**Package style:** TO-39 can
**Termination:** 0,46 mm [0.18 in]
**NIST certification:** None

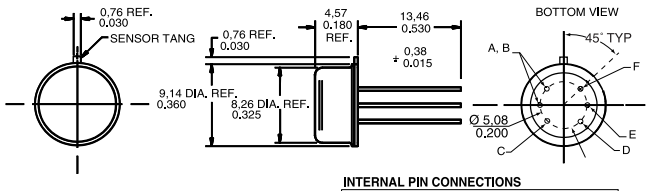


**INTERNAL PIN CONNECTIONS**

| 0,46mm [0.018 in] dia. lead gold plated (6 places) | |
|---|---|
| A, B | No connection |
| C | +VDC supply |
| D | (-) Power or ground |
| E | VDC out |
| F | Case ground |

| REFERENCE |
|---|
| HIH-3602-L |

## CAUTION

**PRODUCT DAMAGE**

The inherent design of this component causes it to be sensitive to the electrostatic discharge (ESD). To prevent ESD-induced damage and/or degradation, take normal ESD precautions when handling this product.

**Failure to comply with these instructions could result in product damage**

# Temperature Sensors - RTDs

Honeywell's thin-film RTD (Resistance Temperature Detector) temperature sensors feature two distinct series. These sensors are laser-trimmed for accuracy and interchangeability. Linear outputs are stable and fast.

The TD Series Temperature Sensors are silicon-based RTDs. They offer 2000 Ohm nominal resistance at 20 °C. Temperature range of -40 °C to 150 °C [-40 °F to 302 °F].

The HEL Series Temperature Sensors are platinum RTDs, offering 100 Ohm or 1000 Ohm versions and temperature ranges of -200 °C to 540 °C [-300 °F to 1000 °F].

## HEL-700 Series 100/1000 Ohm Platinum RTD

**Supply voltage:** 4 Vdc to 9 Vdc
**Base resistance and interchangeability:** 1000 ±2 Ohm (±0.2 %) @ 0 °C (standard)
1000 ±1 Ohm (±0.1 %) @ 0 °C (optional)

### *OPTIONS*

#### *HEL-700*

**Temperature range:** -200 °C to 540 °C [-300 °F to 1000 °F]
**Packaging style/termination:** Radial chip/ribbon leads (type A)
Radial chip/no leads (type B)
SMT (axial) flip chip/no leads (type C)

#### Type A

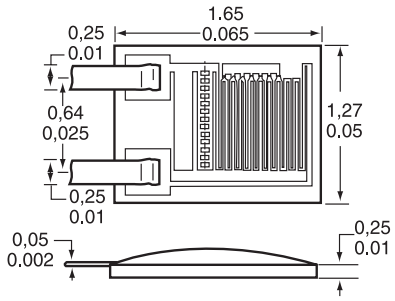


#### Type B

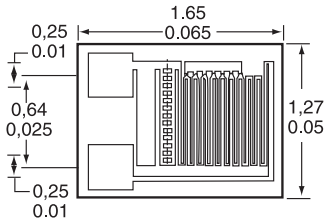


#### Type C

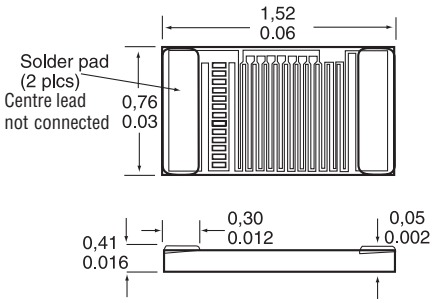


### *100 Ohm (0.00385 Ohm/Ohm/°C DIN standard)*

| PACKAGING STYLE | BASE RESISTANCE AND INTERCHANGEABILITY | REFERENCE |
|---|---|---|
| Type A | Standard | HEL-700-T-0-A |
| Type A | Optional | HEL-700-T-1-A |
| Type B | Standard | HEL-700-T-0-B |
| Type B | Optional | HEL-700-T-1-B |

### *1000 Ohm (0.00375 Ohm/Ohm/°C)*

| PACKAGING STYLE | BASE RESISTANCE AND INTERCHANGEABILITY | REFERENCE |
|---|---|---|
| Type A | Standard | HEL-700-U-0-A |
| Type A | Optional | HEL-700-U-1-A |
| Type B | Standard | HEL-700-U-0-B |
| Type B | Optional | HEL-700-U-1-B |
| Type C | Standard | HEL-700-U-0-C |
| Type C | Optional | HEL-700-U-1-C |

**CAUTION**

**PRODUCT DAMAGE**

The inherent design of this component causes it to be sensitive to the electrostatic discharge (ESD). To prevent ESD-induced damage and/or degradation, take normal ESD precautions when handling this product.

**Failure to comply with these instructions could result in product damage**

# HEL-700 Series 100/1000 Ohm Platinum RTD (continued)

## HEL-705/707/711/712/716/717

**Temperature range:** -200 °C to 260 °C [-320 °F to 500 °F] (HEL-705/711/716)
-75 °C to 540 °C [-100 °F to 1000 °F] (HEL-707/712/717)

**Packaging style:** Ceramic case
**Termination:** 12 in leadwires
**NIST calibration:** None

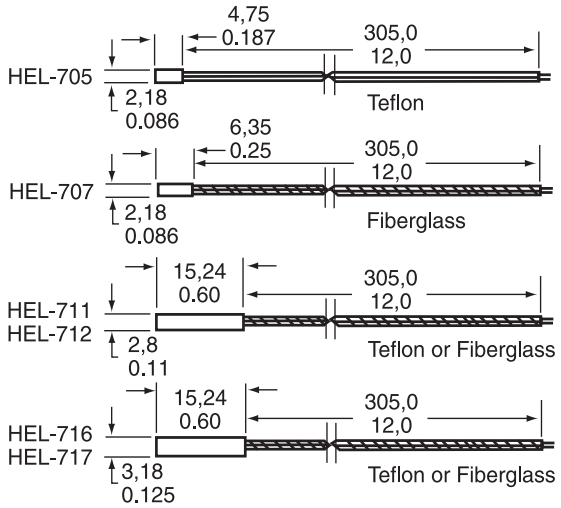


## 100 Ohm (0.00385 Ohm/Ohm/°C DIN standard)

| BASE RESISTANCE AND INTERCHANGEABILITY | REFERENCE |
|---|---|
| Standard | HEL-705-T-0-12-00 |
| Optional | HEL-705-T-1-12-00 |
| Standard | HEL-707-T-0-12-00 |
| Optional | HEL-707-T-1-12-00 |
| Standard | HEL-711-T-0-12-00 |
| Optional | HEL-711-T-1-12-00 |
| Standard | HEL-712-T-0-12-00 |
| Optional | HEL-712-T-1-12-00 |
| Standard | HEL-716-T-0-12-00 |
| Optional | HEL-716-T-1-12-00 |
| Standard | HEL-717-T-0-12-00 |
| Optional | HEL-717-T-1-12-00 |

## 1000 Ohm (0.00375 Ohm/Ohm/°C)

| BASE RESISTANCE AND INTERCHANGEABILITY | NIST CALIBRATION | REFERENCE |
|---|---|---|
| Standard | | HEL-705-U-0-12-00 |
| Optional | | HEL-705-U-1-12-00 |
| Standard | | HEL-707-U-0-12-00 |
| Optional | | HEL-707-U-1-12-00 |
| Standard | | HEL-711-U-0-12-00 |
| Optional | | HEL-711-U-1-12-00 |
| Standard | | HEL-712-U-0-12-00 |
| Optional | | HEL-712-U-1-12-00 |
| Standard | | HEL-716-U-0-12-00 |
| Optional | | HEL-716-U-1-12-00 |
| Optional | NIST @ 0 °C and 100 °C | HEL-716-U-1-12-C2 |
| Standard | | HEL-717-U-0-12-00 |
| Optional | | HEL-717-U-1-12-00 |

# TD Series 2000 Ohm Silicon RTD

**Supply voltage:** 10 Vdc
**Temperature range:** -40 °C to 150 °C [-40 °F to 302 °F]

## OPTIONS

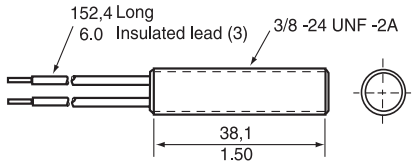


## TD4A Liquid temperature sensor

| PACKAGING STYLE | TERMINATION | REFERENCE |
|---|---|---|
| Threaded aluminium case | Leadwires | TD4A |

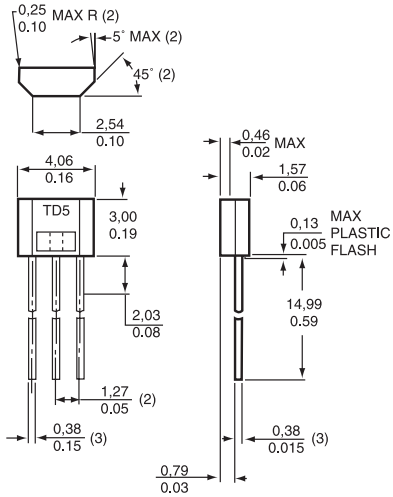


## TD5A Subminiature temperature sensor

| PACKAGING STYLE | TERMINATION | REFERENCE |
|---|---|---|
| Plastic case | SIP | TD5A |

# Temperature Sensors - Thermistors

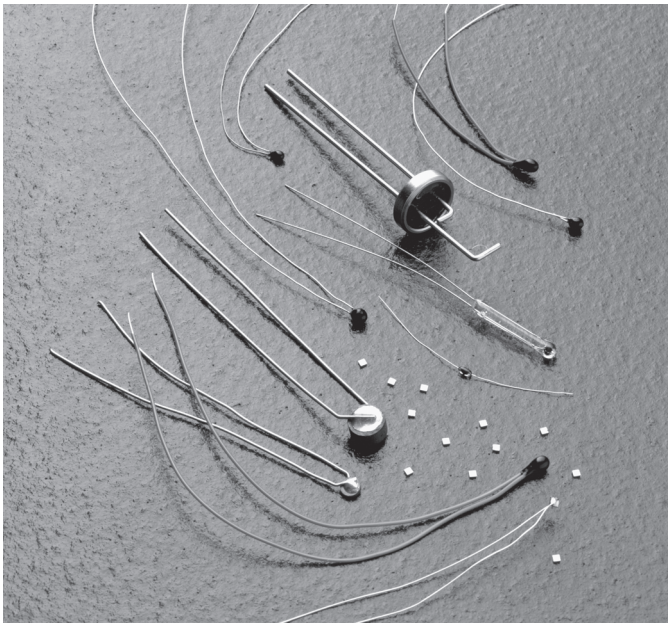

Thermistors change resistance with a change in temperature. They do not amplify, rectify, polarize or generate a signal. The thermistor temperature may be changed by the surrounding temperature or by self-heating the thermistor by passing a current through it.

Most applications such as temperature measurement and control or copper coil compensation require that the power dispersed in a thermistor be kept to a minimum so as not to perceptibly self-heat the thermistor. Other applications depend entirely on the self-heating effect. When the surrounding temperature is fixed, the resistance of a thermistor is largely a function of power being dispersed within it, raising its temperature above its environment. Under these operating conditions, the temperature may rise 100 °C to 200 °C [121 °F to 392 °F] and the resistance may be lowered to 1/1000th of its original value at low current.

This self-heating characteristic provides a whole field of uses for the thermistor. In the self-heat state it is thermally sensitive (its resistance will be changed) to any condition, changing the rate at which heat is conducted away from it. If the rate of heat removal is ideally fixed, then the thermistor is sensitive to power input and suited for use in voltage or power level control applications.

## Glass Encapsulated Chip (GEC) Thermistors

The GEC thermistors are high-quality, hermetically-sealed, glass-encapsulated chip thermistors in an axial lead package. They cover the full temperature range of -60 °C to 300 °C [-76 °F to 572 °F]. These rugged sensors are designed for many applications which demand reliability at low cost. The uniform dimensions often are ideally suited for automated assembly.

| | |
|---|---|
| **Operating temperature:** | -60 °C to 300 °C [-76 °F to 572 °F] |
| **Encapsulation:** | DO-35 glass |
| **Lead material:** | Tinned copper-clad steel |
| **Dissipation constant (DC):** | 2.5 mW/°C in still air min. |
| **Time constant (TC):** | 4 s in still air max. |
| **Resistance range at 25 °C [77 °F]:** | 1 kOhm to 1 MOhm |

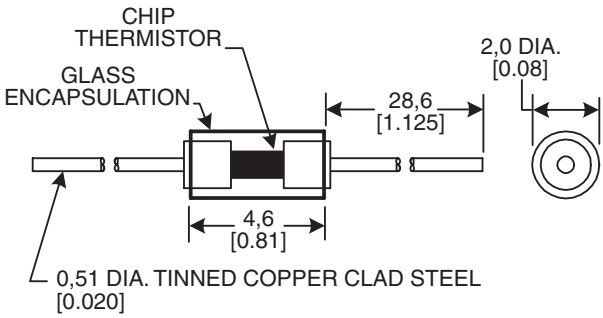


## OPTIONS

### At 25 °C [77 °F]

| OHM | % TOLERANCE | R/T CURVE | REFERENCE |
|---|---|---|---|
| 1,000 | 10 | 10A | 135-102DAG-J01 |
| 2,000 | 10 | 10 | 135-202FAG-J01 |
| 3,000 | 10 | 10 | 135-302FAG-J01 |
| 5,000 | 5 | 10 | 135-502FAF-J01 |
| 5,000 | 10 | 10 | 135-502FAG-J01 |
| 10,000 | 5 | 10 | 135-103FAF-J01 |
| 10,000 | 10 | 16 | 135-103FAG-J01 |
| 10,000 | 5 | 16 | 135-103LAF-J01 |
| 20,000 | 10 | 16 | 135-203LAG-J01 |
| 30,000 | 10 | 16 | 135-303KAG-J01 |
| 50,000 | 5 | 16 | 135-503LAF-J01 |
| 50,000 | 10 | 16 | 135-503LAG-J01 |
| 100,000 | 5 | 16 | 135-104LAF-J01 |
| 100,000 | 10 | 16 | 135-104LAG-J01 |
| 200,000 | 10 | 1 | 135-204QAG-J01 |
| 500,000 | 10 | 1 | 135-504QAG-J01 |
| 1 M | 10 | 1 | 135-105QAG-J01 |

### Interchangeable R/T curve matched ±1 °C from 0 °C to 100 °C [32 °F to 212 °F]

| OHM | R/T CURVE | REFERENCE |
|---|---|---|
| 10,000 | 16 | 135-103LFW-J01 |
| 20,000 | 16 | 135-203LFW-J01 |
| 30,000 | 16 | 135-303LFW-J01 |
| 50,000 | 16 | 135-503LFW-J01 |
| 100,000 | 16 | 135-104LFW-J01 |

# Epoxy-coated or Uncoated Chip Thermistors

Epoxy-coated or uncoated chip thermistors are available in a broad range of custom resistance values and R/T curves. They are also available in two lead types:

- Uninsulated: 0,2032 mm [0.008 in] diameter, tinned copper for 1 kOhm or less, and tinned copper alloy for greater than 1 kOhm.
- Insulated: 0,254 mm [0.010 in] diameter, nickel wire, Teflon®-insulated, 38,1 mm [1.5 in] long and furnished with 6,35 mm [0.25 in] stripped ends of 0,4064 mm [0.016 in] and 0,508 mm [0.020 in] tin-plated copper leads.

**Operating temperature range:** -40 °C to 125 °C [-40 °F to 257 °F]*
**Encapsulation:** Epoxy-coated or uncoated
**Lead material:** • Uninsulated: tinned copper/copper alloy
• Insulated: tinned copper/copper alloy with nickel wire Teflon
**Dissipation constant (DC):** 0.75 mW/°C in still air min.
**Time constant (TC):** 15 s in still air max.
**Resistance range at 25 °C [77 °F]:** 100 Ohm to 100 kOhm
*Very accurate (±0.2 °C) when used between 0 °C to 70 °C [32 °F to 158 °F]. Other ranges and tolerances are available.

## OPTIONS

### Epoxy-coated chip

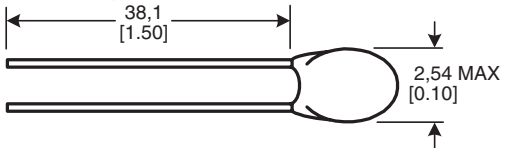


### 10 % tolerance at 25 °C [77 °F], uninsulated leads

| OHM | R/T CURVE | REFERENCE |
|---|---|---|
| 100 | 17 | 197-101CAG-A01 |
| 300 | 17 | 197-301CAG-A01 |
| 500 | 10A | 197-501DAG-A01 |
| 1,000 | 10A | 197-102DAG-A01 |
| 2,000 | 16 | 197-202LAG-A01 |
| 3,000 | 16 | 197-302LAG-A01 |
| 5,000 | 16 | 197-502LAG-A01 |
| 10,000 | 16 | 197-103LAG-A01 |
| 20,000 | 16 | 197-203LAG-A01 |
| 30,000 | 18 | 197-303KAG-A01 |
| 50,000 | 1 | 197-503QAG-A01 |
| 100,000 | 1 | 197-104QAG-A01 |

### 10 % tolerance at 25 °C [77 °F], insulated leads

| OHM | R/T CURVE | REFERENCE |
|---|---|---|
| 100 | 17 | 199-101CAG-A01 |
| 300 | 17 | 199-301CAG-A01 |
| 500 | 10A | 199-501DAG-A01 |
| 1,000 | 10A | 199-102DAG-A01 |
| 2,000 | 16 | 199-202LAG-A01 |
| 3,000 | 16 | 199-302LAG-A01 |
| 5,000 | 16 | 199-502LAG-A01 |
| 10,000 | 16 | 199-103LAG-A01 |
| 20,000 | 16 | 199-203LAG-A01 |
| 30,000 | 18 | 199-303KAG-A01 |
| 50,000 | 1 | 199-503QAG-A01 |
| 100,000 | 1 | 199-104QAG-A01 |

### Uncoated chip

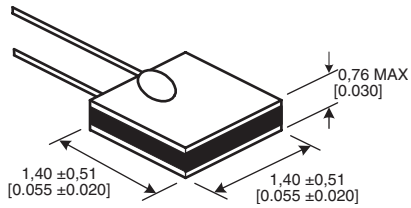


### 10 % tolerance at 25 °C [77 °F], uninsulated leads

| OHM | R/T CURVE | REFERENCE |
|---|---|---|
| 100 | 17 | 195-101CAG-A01 |
| 300 | 17 | 195-301CAG-A01 |
| 500 | 10A | 195-501DAG-A01 |
| 1,000 | 10A | 195-102DAG-A01 |
| 2,000 | 16 | 195-202LAG-A01 |
| 3,000 | 16 | 195-302LAG-A01 |
| 5,000 | 16 | 195-502LAG-A01 |
| 10,000 | 16 | 195-103LAG-A01 |
| 20,000 | 16 | 195-203LAG-A01 |
| 30,000 | 18 | 195-303KAG-A01 |
| 50,000 | 1 | 195-503QAG-A01 |
| 100,000 | 1 | 195-104QAG-A01 |

### 10 % tolerance at 25 °C [77 °F], insulated leads

| OHM | R/T CURVE | REFERENCE |
|---|---|---|
| 100 | 17 | 198-101CAG-A01 |
| 300 | 17 | 198-301CAG-A01 |
| 500 | 10A | 198-501DAG-A01 |
| 1,000 | 10A | 198-102DAG-A01 |
| 2,000 | 16 | 198-202LAG-A01 |
| 3,000 | 16 | 198-302LAG-A01 |
| 5,000 | 16 | 198-502LAG-A01 |
| 10,000 | 16 | 198-103LAG-A01 |
| 20,000 | 16 | 198-203LAG-A01 |
| 30,000 | 18 | 198-303KAG-A01 |
| 50,000 | 1 | 198-503QAG-A01 |
| 100,000 | 1 | 198-104QAG-A01 |

## UNI-CURVE® Interchangeable Thermistors

The UNI-CURVE® Interchangeable thermistors are temperature-matched. They offer additional cost savings by eliminating the need for individual resistance temperature calibration, as well as standardization of circuit components and simplification of design and replacement problems.

**Operating temperature range:** -40 °C to 150 °C [-40 °F to 302 °F]*
**Encapsulation:** Epoxy-coated
**Lead material:** Tinned copper alloy
**Dissipation constant (DC):** 0.75 mW/°C in still air min.
**Time constant (TC):** 15 s in still air max.
**Resistance range at 25 °C [77 °F]:** 1 kOhm to 100 kOhm
*Very accurate (±0.2 °C) when used between 0 °C to 70 °C [32 °F to 158 °F]. Other ranges and tolerances are available.

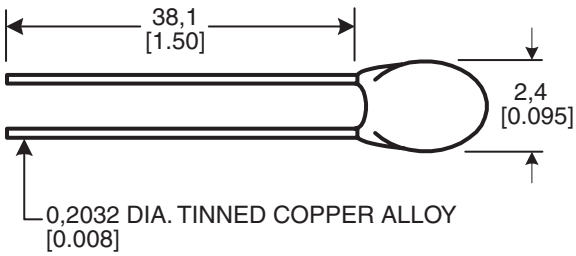


### OPTIONS

#### ±0,2 °C tolerance at 25 °C [77 °F]
#### 0 °C to 70 °C [32 °F to 158 °F]

| OHM | R/T CURVE | REFERENCE |
|---|---|---|
| 1,000 | 10A | 192-102DET-A01 |
| 2,252 | 16 | 192-222LET-A01 |
| 3,000 | 16 | 192-302LET-A01 |
| 5,000 | 16 | 192-502LET-A01 |
| 10,000 | 16 | 192-103LET-A01 |
| 30,000 | 18 | 192-303KET-A01 |
| 30,000 | 1 | 192-303QET-A01 |
| 50,000 | 1 | 192-503QET-A01 |
| 100,000 | 1 | 192-104QET-A01 |

#### ±0,5 °C tolerance at 25 °C [77 °F]
#### 0 °C to 70 °C [32 °F to 158 °F]

| OHM | R/T CURVE | REFERENCE |
|---|---|---|
| 1,000 | 10A | 192-102DEV-A01 |
| 2,252 | 16 | 192-222LEV-A01 |
| 3,000 | 16 | 192-302LEV-A01 |
| 5,000 | 16 | 192-502LEV-A01 |
| 10,000 | 16 | 192-103LEV-A01 |
| 30,000 | 18 | 192-303KEV-A01 |
| 30,000 | 1 | 192-303QEV-A01 |
| 50,000 | 1 | 192-503QEV-A01 |
| 100,000 | 1 | 192-104QEV-A01 |

#### ±1,0 °C tolerance at 25 °C [77 °F]
#### 0 °C to 70 °C [32 °F to 158 °F]

| OHM | R/T CURVE | REFERENCE |
|---|---|---|
| 1,000 | 10A | 192-102DEW-A01 |
| 2,252 | 16 | 192-222LEW-A01 |
| 3,000 | 16 | 192-302LEW-A01 |
| 5,000 | 16 | 192-502LEW-A01 |
| 10,000 | 16 | 192-103LEW-A01 |
| 30,000 | 18 | 192-303KEW-A01 |
| 30,000 | 1 | 192-303QEW-A01 |
| 50,000 | 1 | 192-503QEW-A01 |
| 100,000 | 1 | 192-104QEW-A01 |

## Disc Thermistors

Uncoated or epoxy-coated Disc thermistors are available in a broad range of custom resistance values and R/T curves. They are only available with uninsulated leads. Diameters range from 2,54 mm [0.1 in] to 10,16 mm [0.4 in]. They are often ideally suited for low-cost applications with a maximum temperature of 150 °C [302 °F]. They are also typically well suited for PC board mount and are available on tape and reel.

**Operating temperature range:** -60 °C to 150 °C [-76 °F to 302 °F]
**Encapsulation:** Epoxy-coated or uncoated
**Lead material:** Uninsulated: tinned copper/copper alloy
**Dissipation constant (DC):** Varies with size, ranges from 3 mW/°C to 8 mW/°C
**Time constant (TC):** Varies with size ranges from 10 s to 32 s
**Resistance range at 25 °C [77 °F]:** 100 Ohm to 100 kOhm

### OPTIONS

#### Epoxy-coated chip

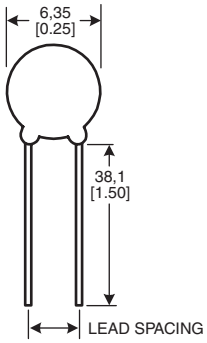


#### 10 % tolerance at 25 °C [77 °F]
#### Lead diameter 0,4064 mm [0.016 in]
#### Lead spacing 2,54 mm [0.1 in]

| OHM | R/T CURVE | DC MIN. | TC MAX. | REFERENCE |
|---|---|---|---|---|
| 500 | 10 | 3 | 10 | 140-501FAG-RB1 |
| 1,000 | 10 | 4 | 10 | 140-102FAG-RB1 |
| 3,000 | 16 | 3 | 10 | 140-302LAG-RB1 |
| 5,000 | 16 | 4 | 10 | 140-502LAG-RB1 |
| 10,000 | 16 | 4 | 10 | 140-103LAG-RB1 |
| 50,000 | 1 | 3 | 10 | 140-503QAG-RB1 |
| 100,000 | 1 | 3 | 10 | 140-104QAG-RB1 |

#### 10 % tolerance at 25 °C [77 °F]
#### Lead diameter 0,508 mm [0.020 in]
#### Lead spacing 5,08 mm [0.2 in]

| OHM | R/T CURVE | DC MIN. | TC MAX. | REFERENCE |
|---|---|---|---|---|
| 100 | 10 | 4 | 16 | 143-101FAG-RC1 |
| 200 | 10 | 5 | 18 | 143-201FAG-RC1 |
| 300 | 10 | 6 | 20 | 143-501FAG-RC1 |
| 1,000 | 16 | 6 | 20 | 143-102LAG-RC1 |
| 3,000 | 16 | 6 | 22 | 143-302LAG-RC1 |
| 5,000 | 16 | 7 | 35 | 143-502LAG-RC1 |
| 10,000 | 1 | 4 | 20 | 143-103QAG-RC1 |
| 30,000 | 1 | 6 | 25 | 143-303QAG-RC1 |
| 50,000 | 1 | 7 | 30 | 143-503QAG-RC1 |

### Uncoated chip

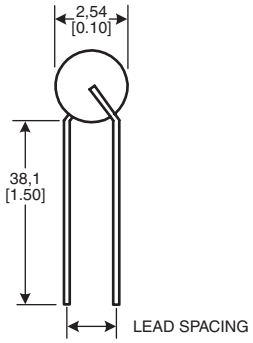


### 10 % tolerance at 25 °C [77 °F]
### Lead diameter 0,4064 mm [0.016 in]
### Lead spacing 2,54 mm [0.1 in]

| OHM | R/T CURVE | DC MIN. | TC MAX. | REFERENCE |
|---|---|---|---|---|
| 500 | 10 | 3 | 10 | 142-501FAG-RB1 |
| 1,000 | 10 | 4 | 10 | 142-102FAG-RB1 |
| 3,000 | 16 | 3 | 10 | 142-302LAG-RB1 |
| 5,000 | 16 | 4 | 10 | 142-502LAG-RB1 |
| 10,000 | 16 | 4 | 10 | 142-103LAG-RB1 |
| 50,000 | 1 | 3 | 10 | 142-503QAG-RB1 |
| 100,000 | 1 | 3 | 10 | 142-104QAG-RB1 |

### 10 % tolerance at 25 °C [77 °F]
### Lead diameter 0,508 mm [0.020 in]
### Lead spacing 5,08 mm [0.2 in]

| OHM | R/T CURVE | DC MIN. | TC MAX. | REFERENCE |
|---|---|---|---|---|
| 100 | 10 | 4 | 16 | 145-101FAG-RC1 |
| 200 | 10 | 5 | 18 | 145-201FAG-RC1 |
| 300 | 10 | 6 | 20 | 145-301FAG-RC1 |
| 500 | 10 | 6 | 25 | 145-501FAG-RC1 |
| 1,000 | 16 | 6 | 20 | 145-102LAG-RC1 |
| 3,000 | 16 | 6 | 22 | 145-302LAG-RC1 |
| 5,000 | 16 | 7 | 35 | 145-502LAG-RC1 |
| 10,000 | 1 | 4 | 20 | 145-103QAG-RC1 |
| 30,000 | 1 | 7 | 28 | 145-303QAG-RC1 |
| 50,000 | 1 | 8 | 32 | 145-503QAG-RC1 |

## Standard Bead Thermistors

Standard Bead thermistors are hermetically-sealed in glass. These small units provide maximum stability when used to 300 °C [572 °F] for high temperature design requirements. They are often ideally suited for many stringent military, aerospace and oceanographic applications.

| | |
|---|---|
| **Operating temperature range:** | -60 °C to 300 °C [-76 °F to 572 °F] |
| **Encapsulation:** | Glass hermetic seal |
| **Lead material:** | Platinum iridium |
| **Dissipation constant (DC):** | 0.4 mW/°C in still air min. |
| **Time constant (TC):** | 4 s in still air max. |
| **Resistance range at 25 °C [77 °F]:** | 200 Ohm to 1 MOhm |

### OPTIONS

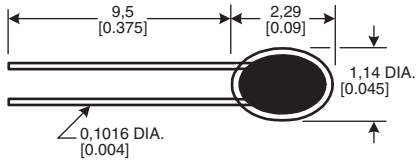


### Adjacent leads
### 20 % Tolerance at 25 °C [77 °F]

| OHM | R/T CURVE | RATIO 0 °C/50 °C | REFERENCE |
|---|---|---|---|
| 200 | 8 | 4.80 | 112-201BAJ-B01 |
| 1,000 | 11 | 7.04 | 112-102EAJ-B01 |
| 2,000 | 11 | 7.04 | 112-202EAJ-B01 |
| 5,000 | 11 | 7.04 | 112-502EAJ-B01 |
| 10,000 | 12 | 7.59 | 112-103FAJ-B01 |
| 20,000 | 13 | 9.11 | 112-203HAJ-B01 |
| 50,000 | 14 | 9.53 | 112-503JAJ-B01 |
| 100,000 | 15 | 10.45 | 112-104KAJ-B01 |
| 200,000 | 15 | 10.45 | 112-204KAJ-B01 |
| 500,000 | 4 | 11.78 | 112-504NAJ-B01 |
| 1 M | 5 | 13.12 | 112-105PAJ-B01 |

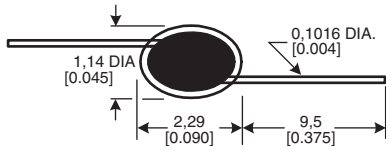


### Axial leads
### 20 % Tolerance at 25 °C [77 °F]

| OHM | R/T CURVE | RATIO 0 °C/50 °C | REFERENCE |
|---|---|---|---|
| 2,000 | 11 | 7.04 | 112-202EAJ-H01 |
| 5,000 | 11 | 7.04 | 112-502EAJ-H01 |
| 10,000 | 12 | 7.59 | 112-103FAJ-H01 |
| 100,000 | 15 | 10.45 | 112-104KAJ-H01 |
| 600,000 | 4 | 11.78 | 112-604NAJ-H01 |

## Small Bead Thermistors

Small Bead Thermistors feature relatively uniform size, offer ultra-fast time response and are highly sensitive to electric power. They are often ideally suited for use in low heat capacity applications and their micro size many times makes them perfect for use in extremely small assemblies such as catheters and hypodermic needles. They are also often used in self-heat applications such as gas analysis, gas flow measurement and thermal conductivity analysis.

**Operating temperature range:** -60 °C to 300 °C [-76 °F to 572 °F]
**Encapsulation:** Glass hermetic seal
**Lead material:** Platinum iridium
**Dissipation constant (DC):** 0.1 mW/°C in still air min.
**Time constant (TC):** 1 s in still air max.
**Resistance range at 25 °C [77 °F]:** 2 kOhm to 100 kOhm

### *OPTIONS*

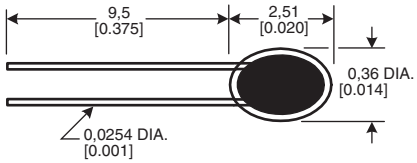


### *Adjacent leads at 25 °C [77 °F]*

| OHM | % TOLERANCE | R/T CURVE | RATIO 0 °C/50 °C [32 °F/122 °F] | REFERENCE |
|---|---|---|---|---|
| 2,000 | 25 | 9 | 5.50 | 111-202CAK-B01 |
| 8,000 | 20 | 11 | 7.04 | 111-802EAJ-B01 |
| 30,000 | 25 | 11 | 7.04 | 111-303EAK-B01 |

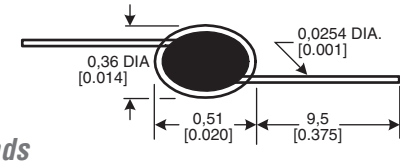


### *Axial leads at 25 °C [77 °F]*

| OHM | % TOLERANCE | R/T CURVE | RATIO 0 °C/50 °C [32 °F/122 °F] | REFERENCE |
|---|---|---|---|---|
| 2,000 | 25 | 9 | 5.50 | 111-202CAK-H01 |
| 8,000 | 20 | 11 | 7.04 | 111-802EAJ-H01 |
| 10,000 | 20 | 11 | 7.04 | 111-103EAJ-H01 |
| 100,000 | 25 | 13 | 9.11 | 111-104HAK-H01 |

## Glass Probe Thermistors

Glass Probe thermistors are shock resistant, rugged, glass-encapsulated units that are ideally suited for immersion in fluid and convenient for mounting in air sensor assemblies. They are available in two configurations: standard and mini.

**Operating temperature range:** -60 °C to 300 °C [-76 °F to 572 °F]
**Encapsulation:** Glass
**Lead material:** Dumet (copper-clad Ni-Fe wire)
**Dissipation constant (DC):** • Standard: 1.0 mW/°C in still air min.
• Mini: 0.7 mW/°C in still air min.
**Time constant (TC):** • Standard: 22 s in still air max.
• Mini: 10 s in still air max.
**Resistance range at 25 °C [77 °F]:** 1 kOhm to 10 MOhm

### *OPTIONS*

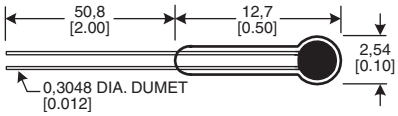


### *Standard*
### *20 % Tolerance at 25 °C [77 °F]*
### *dc 1.0 mW/°C min., TC 22 s max.*

| OHM | R/T CURVE | RATIO | REFERENCE |
|---|---|---|---|
| 1,000 | 11 | 7.04 | 121-102EAJ-Q01 |
| 2,000 | 11 | 7.04 | 121-202EAJ-Q01 |
| 5,000 | 11 | 7.04 | 121-502EAJ-Q01 |
| 10,000 | 12 | 7.59 | 121-103FAJ-Q01 |
| 50,000 | 14 | 9.53 | 121-502JAJ-Q01 |
| 100,000 | 15 | 10.45 | 121-104KAJ-Q01 |
| 200,000 | 15 | 10.45 | 121-202KAJ-Q01 |
| 500,000 | 4 | 11.89 | 121-504NAJ-Q01 |
| 1 M | 5 | 13.12 | 121-105PAJ-Q01 |
| 10 M | 6 | 15.65 | 121-106QAJ-Q01 |

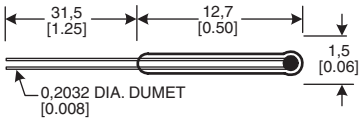


### *Mini*
### *20 % Tolerance at 25 °C [77 °F]*
### *dc 0.7 mW/°C min., TC 10 s max.*

| OHM | R/T CURVE | RATIO | REFERENCE |
|---|---|---|---|
| 1,000 | 11 | 7.04 | 120-102EAJ-Q01 |
| 2,000 | 11 | 7.04 | 120-202EAJ-Q01 |
| 10,000 | 12 | 7.59 | 120-103FAJ-Q01 |
| 50,000 | 14 | 9.53 | 120-502JAJ-Q01 |
| 100,000 | 15 | 10.45 | 120-104KAJ-Q01 |

## E-I Matched Bead Thermistors

E-I Matched Bead thermistors are designed for use in many gas chromatography and other thermal conductivity gas analysis instruments. Each bead is mounted to a special hermetically-sealed header. For maximum sensitivity, the higher resistance units should be used at higher ambient temperatures.

**Operating temperature range:** -60 °C to 300 °C [-76 °F to 572 °F]
**Encapsulation:** Glass hermetic seal
**Lead material:** Tinned Ni-Fe

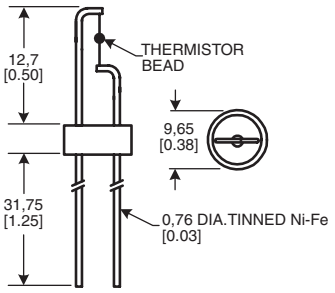


### OPTIONS

#### Helium-matched assembly

| | |
|---|---|
| **Characteristics:** | 115-802EDJ-801 |
| **Resistance at 25 °C [77 °F]:** | 8000 Ohm ±25 % |
| **Resistance at 0 °C [32 °F] (approx.):** | 23,200 Ohm |
| **Resistance at 50 °C [122 °F] (approx.):** | 3,200 Ohm |
| **Ratio of resisistance 0 °C/50 °C:** | 6.56 to 7.99 |
| **Beta nominal at 25 °C:** | 3495 K |
| **Temperature coefficient at 25 °C:** | -3.9 %/°C |
| **Time constant (TC) still air max.:** | 1 s |
| **Dissipation constant (DC) still air min.:** | 0.16 mW/°C |
| **DC helium:** | 0.5 mW/°C |
| **Power rating (air):** | 45 mW |
| **Power rating (helium):** | 140 mW |
| **Max. ambient temperature:** | 250 °C [482 °F] |
| **Max. operating temperature (including self-heat):** | 300 °C [572 °F] |
| **Resisistance at max. operating temperature:** | 25 Ohm |

*2 % resistance at 25 °C [77 °F]*

| DESCRIPTION | REFERENCE |
|---|---|
| Two 111-802EAJ-H01 each mounted on a glass hermetic seal and matched in helium to within 30 mV, 25 mV and 20 mV of each other at 2 mA, 5 mA, 10 mA and 15 mA. | 115-802EDJ-801 |

#### Air-matched assembly

| | |
|---|---|
| **Characteristics:** | 115-202CDK-801 |
| **Resistance at 25 °C [77 °F]:** | 2000 Ohm ±25 % |
| **Resistance at 0 °C [32 °F] (approx.):** | 4900 Ohm |
| **Resistance at 50 °C [122 °F] (approx.):** | 890 Ohm |
| **Ratio of resistance 0 °C/50 °C:** | 4.95 to 6.95 |
| **Beta nominal at 25 °C:** | 3000 K |
| **Temperature coefficient at 25 °C:** | -3.4 %/°C |
| **Time constant (TC) still air max.:** | 1 s |
| **Dissipation constant (DC) still air min.:** | 0.16 mW/°C |
| **DC helium:** | 0.5 mW/°C |
| **Power rating (air):** | 15 mW |
| **Power rating (helium):** | 60 mW |
| **Max. ambient temperature:** | 100 °C [212 °F] |
| **Max. operating temperature (including self-heat):** | 150 °C [302 °F] |
| **Resisistance at max. operating temperature:** | 88 Ohm |

*5 % resistance at 25 °C [77 °F]*

| DESCRIPTION | REFERENCE |
|---|---|
| Two 111-202CAK-H01 each mounted on a glass hermetic seal and matched in air to within 15 mV of each other at 5 mA, 10 mA and 15 mA. | 115-202CDK-801 |

## ICL Inrush Current Limiter Thermistors

ICL Inrush Current Limiter thermistors are a cost-effective way of limiting the inrush of current that may damage components in a switching power supply and in other power devices when the equipment is turned on. These devices have solderable leads and are PC board mountable.

| | |
|---|---|
| **Operating temperature range:** | -40 °C to 185 °C [-40 °F to 365 °F] |
| **Maximum steady state current:** | 1 A to 30 A |
| **Encapsulation:** | Black silicone |
| **Lead material:** | Tinned copper |
| **Dissipation constant (DC):** | 12.7 mW/°C to 23 mW/°C |
| **Time constant (TC):** | 32 s to 93 s |
| **Resistance range at 25 °C [77 °F]:** | 0.5 Ohm to 220 Ohm ±20 % |
| **Resistance at max. steady state current:** | 0.01 Ohm to 2.34 Ohm |
| **Max. diameter:** | 9,5 mm [0.374 in] to 32.0 mm [1.260 in] |
| **Max. thickness:** | 5,0 mm [0.204 in] to 8.0 mm [0.327 in] |
| **Lead diameter:** | 0,8 mm [0.032 in] to 1.0 mm [0.040 in] |

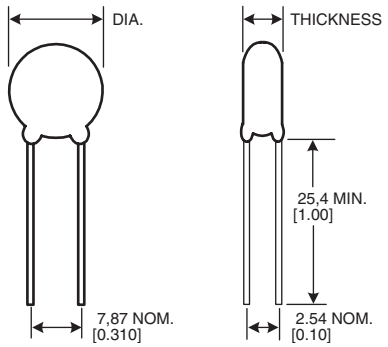


| OHM | MAX. STEADY STATE CURRENT (A) | RESISTANCE AT MAX. STEADY STATE CURRENT (OHM) | REFERENCE |
|---|---|---|---|
| 0.5 | 30 | 0.01 | ICL32OR530-01 |
| 1 | 20 | 0.02 | ICL221R020-01 |
| 1 | 30 | 0.02 | ICL321R030-01 |
| 2 | 18 | 0.03 | ICL222R018-01 |
| 2.5 | 8 | 0.07 | ICL152R508-01 |
| 2.5 | 8 | 0.06 | ICL122R508-01 |
| 2.5 | 15 | 0.03 | ICL222R515-01 |
| 5 | 6 | 0.1 | ICL155R006-01 |
| 5 | 7 | 0.07 | ICL155R007-01 |
| 10 | 2 | 0.3 | ICL1010002-01 |
| 10 | 3.2 | 0.18 | ICL1010004-01 |
| 10 | 5 | 0.13 | ICL1210005-01 |
| 10 | 6 | 0.15 | ICL1510006-01 |
| 10 | 8 | 0.1 | ICL2210008-01 |
| 12 | 4 | 0.26 | ICL1512004-01 |
| 16 | 4 | 0.27 | ICL1516004-01 |
| 20 | 2 | 0.5 | ICL1220002-01 |
| 40 | 2 | 0.6 | ICL1240002-01 |
| 50 | 2 | 0.72 | ICL1250002-01 |
| 80 | 2.5 | 0.75 | ICL1580003-01 |
| 120 | 3 | 0.9 | ICL2212103-01 |
| 220 | 2 | 0.8 | ICL1522102-01 |

# Temperature Sensors - Probes

Temperature Sensor Probes are finished thermistor assemblies complete with thermistor housing, extension leads and usually a connector. A variety of customized packages are available.

NOTE: The products in this section do not follow the "how to use this catalogue" instructions provided in the catalogue introduction. Specific reference numbers are not given due to their custom nature. Please contact your local Honeywell sales office for ordering information.

## ES120 Series Coolant/Oil Temperature Sensor Probes

The ES120 probe is a thermistor mounted into a plastic lead frame and assembled into a metal body. This subassembly is then overmolded to produce both the electrical connection system and the hexagonal shape for easy installation. The all-plastic design reduces heat loss through the sensor, thereby reducing wind chill effects.

**Operating temperature range:** -40 °C to 155 °C [-40 °F to 311 °F]
**Encapsulation:** NTC (Negative Temperature Coefficient) encapsulated in thermal epoxy
**Lead material:** Terminals are 2,8 mm x 0,8 mm [0.11 in x 0.03 in] brass with a copper flash protection layer with final plating to customer requirement (silver, tin, gold, etc.)
**Dissipation constant:** Tor values (time to reach 63.2 % of the difference between two temperatures) are typically 19 s rising temperature and 14 s falling temperature
**Time constant:** None
**Resistance range at 25 °C [77 °F]** 2.5 kOhm at 20 °C [68 °F] ±5 %

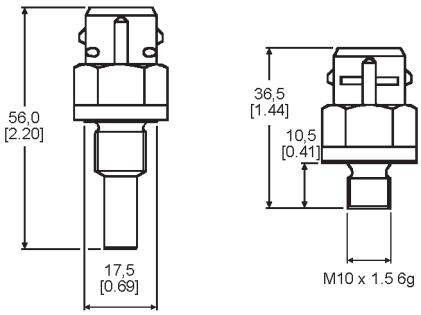


**SERIES NAME**
ES120 Coolant/Oil Temperature Sensor Probe

## ES110 Series Inlet Air Temperature Sensor Probes

The ES110 probe is a thermistor mounted into a plastic lead frame and assembled into a metal body. This subassembly is then overmolded to produce both the electrical connection system and the hexagonal shape for easy installation. Two end configurations are available depending upon response required or degree of protection. The all-plastic design reduces heat loss through the sensor, thereby reducing wind chill effects.

**Operating temperature range:** -40 °C to 155 °C [-40 °F to 311 °F]
**Encapsulation:** Standard NTC (Negative Temperature Coefficient) epoxy protection
**Lead material:** Terminals are 2,8 mm x 0,8 mm [0.11 in x 0.03 in] brass with a copper flash protection layer with final plating to customer requirement (silver, tin, gold, etc.)
**Dissipation constant:** 0.85 mW/°C in still air at 25 °C [77 °F]
**Time constant:** 1 s in liquids, 12 s max. in still air
**Resistance range at 25 °C [77 °F]** 2.5 kOhm at 20 °C [68 °F] ±5 %

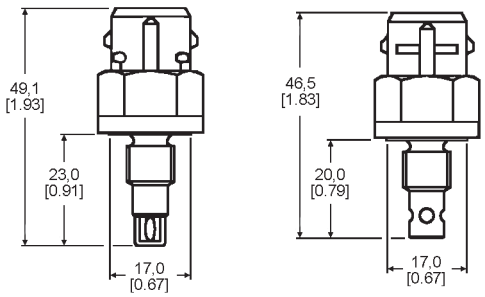


**SERIES NAME**
ES110 Inlet Air Temperature Sensor Probe

## Air Conditioning Temperature Sensor Probes

A fully overmolded and protected sensor incorporating a specially developed NTC (Negative Temperature Coefficient) to withstand many very aggressive, damp operating conditions. The housing is snap fit promoting easy assembly.

**Operating temperature range:** -30 °C to 100 °C [-22 °F to 212 °F]
**Encapsulation:** Special NTC epoxy coating
**Lead material:** Terminals are 2,8 mm x 0,8 mm [0.11 in x 0.03 in] brass with a copper flash protection layer with final plating to customer requirement (silver, tin, gold, etc.)
**Dissipation constant:** 2.5 mW/°C in still air
**Time constant:** 2 s in water, 15 s max. in still air
**Resistance range at 25 °C [77 °F]:** 9 kOhm at 0 °C [32 °F] ±1.5 %

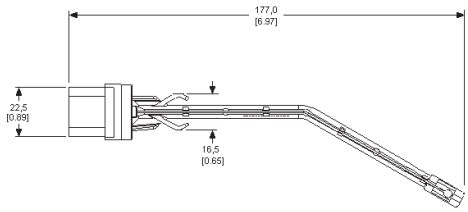


**NAME**
Air Conditioning Temperature Sensor Probe

## Earth Return (Ground) Temperature Sensor Probes

An all-metal temperature sensor, with the body being the ground, incorporating a flat disc thermistor held flush on the base of the body by a spring-loaded pressure pad. This sensor provides a quick response to small variations in high temperature changes.

**Operating temperature range:** -40 °C to 155 °C [-40 °F to 311 °F]
**Encapsulation:** NTC (negative temperature coefficient) encapsulated in a silicone paste
**Lead material:** Standard Lucar type or other variations
**Dissipation constant:** 3 mW/°C in still air
**Time constant:** 10 s in automotive coolant
**Resistance range at 25 °C [77 °F]:** Per customer requirements

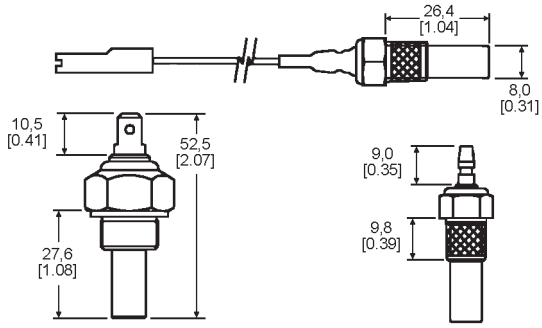


**NAME**
Earth Return (Ground) Temperature Sensor Probe

## Refrigerant Temperature Sensor Probes

A fully sealed, quick response temperature sensor suitable for use in many HVAC systems.

**Operating temperature range:** -40 °C to 140 °C [-40 °F to 284 °F]
**Encapsulation:** NTC (Negative Temperature Coefficient) encapsulated in a thermal heat paste
**Lead material:** Terminals are 1,5 mm x 0,6 mm [0.06 in x 0.02 in] brass with a copper flash protection layer with final plating to customer requirement (silver, tin, gold, etc.)
**Dissipation constant:** Tor values (time to reach 63.2 % of the difference between two temperatures) are typically 10 s rising temperature and 6 s falling temperature
**Time constant:** None
**Resistance range at 25 °C [77 °F]:** 2.5 kOhm at 20 °C [68 °F], calibrated at ±3 % at 100 °C [212 °F]

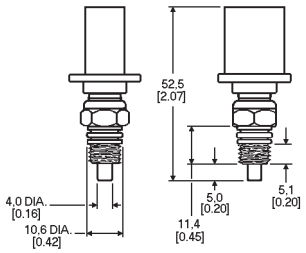


**NAME**
Refrigerant Temperature Sensor Probe

## Surface Temperature Sensor Probes

Sensor assembly is designed to have good heat conductivity between the thermistor element and the area to be monitored. Time response is consistent with the thermal conductivity of the surface being measured. Multiple configurations allow sensor to be mounted, bolted, riveted or attached adhesively.

**Operating temperature range:** -60 °C to 150 °C [-76 °F to 302 °F]
**Encapsulation:** Thermally conductive epoxy used to pot discrete component into surface-style housing
**Lead material:** Insulated lead wires and terminals when required, other options available
**Dissipation constant:** 3.3 mW/°C to 12 mW/°C (varies with size and housing style)
**Time constant:** 1 s to 40 s (application dependent)
**Resistance range at 25 °C [77 °F]:** Per customer requirements

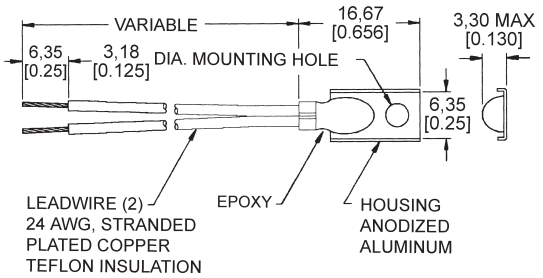


**NAME**
Surface Temperature Sensor Probe

## Air/Gas Temperature Sensor Probes

Air/Gas probes contain an exposed thermistor element because gas is not as good a heat conductor or thermal sink as a liquid, and because time response is normally an important consideration. The sensor housing may be composed of plastic or other thermally conductive materials to reduce conduction and heat from the gas circulating around the thermistor. Multiple configurations allow easy mounting.

**Operating temperature range:** -60 °C to 150 °C [-76 °F to 302 °F]
**Encapsulation:** None, sensing element is exposed
**Lead material:** Insulated lead wires and terminals when required, other options available
**Dissipation constant:** 0.1 mW/°C to 3 mW/°C (design specific)
**Time constant:** 4 s to 150 s (application and design dependent)
**Resistance range at 25 °C [77 °F]:** Per customer requirements

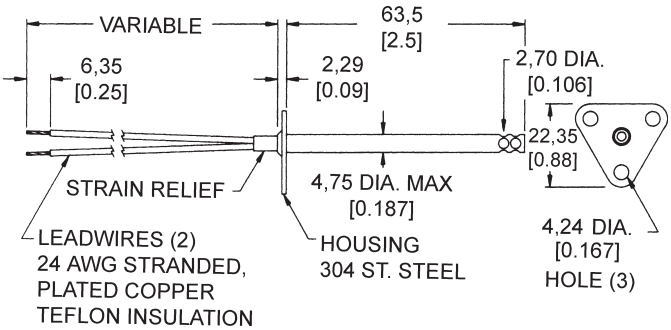


**NAME**
Air/Gas Temperature Sensor Probe

## Immersion Temperature Sensor Probes

Custom designed and application specific, immersion probes are designed to be directly placed in the liquid medium to be measured. A large variety of housing alloys are available. Multiple configurations allow easy mounting.

**Operating temperature range:** -60 °C to 300 °C [-76 °F to 572 °F]
**Encapsulation:** NTC (Negative Temperature Coefficient) encapsulated in housing appropriate to the application
**Lead material:** Insulated lead wires and terminals when required, other options available
**Dissipation constant:** 5 mW/°C to 10 mW/°C (varies with size and housing style)
**Time constant:** 1 s to 12 s (design dependent)
**Resistance range at 25 °C [77 °F]** Per customer requirements

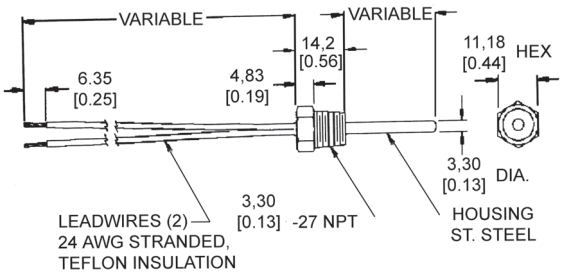


**NAME**
Immersion Temperature Sensor Probe

# Thermal Cutoffs

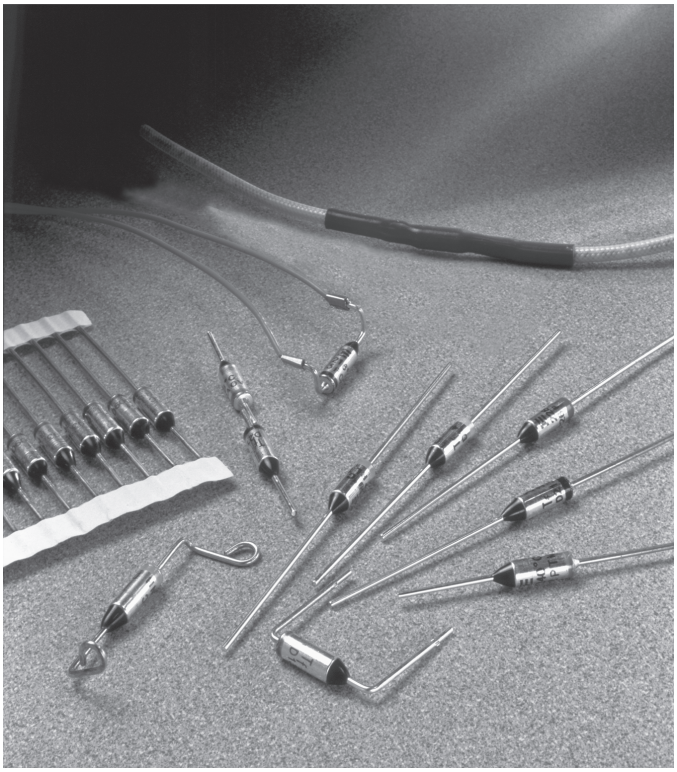

Thermal Cutoffs include products for use in a wide array of small appliances, major appliances, office copy machines, automotive and HVAC equipment. These devices are available in various lead lengths and configurations. Honeywell offers versions that are compliant with European Directive 2002/95/EC, otherwise known as RoHS (Restriction of Hazardous Substances), in electrical and electronic equipment.

NOTE: The products in this section do not follow the "how to use this catalogue" instructions provided in the catalogue introduction. Specific reference numbers are not given due to their custom nature. Please contact your local Honeywell sales office for ordering information.

**NOTICE**

- To maximize product life, use a 30 °C [86 °F] min. differential between the operating ambient temperature at the fuse location and the specified functioning temperature of the fuse being used. Maintain a 40 °C [104 °F] min. differential between devices with functioning temperatures above 200 °C [392 °F].
- Under no condition should the thermal cutoff be exposed to a continuous normal temperature rating in excess of 200 °C [392 °F]. Only proper testing of the above will determine the selected thermal cutoff's suitability within the application.

## D Series

The D Series responds to temperature by interrupting an electrical circuit when the operating and/or environmental temperature exceeds the thermal rating of the fuse. This is accomplished when the organic pellet experiences a phase change, allowing the spring activated contacts to permanently open the circuit.

**Operating temperature range:** 72 °C to 240 °C [162 °F to 464 °F]
**Environmental exposure range:** see notice

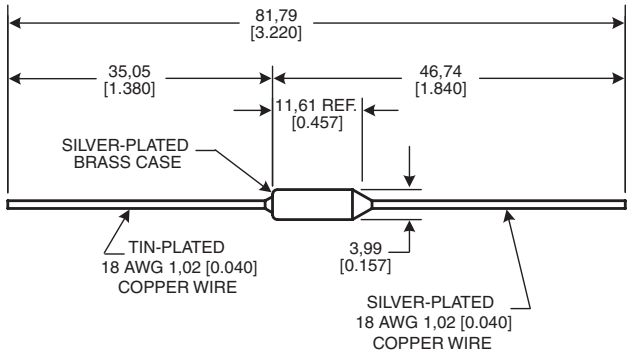


**NAME**
DXXX-002

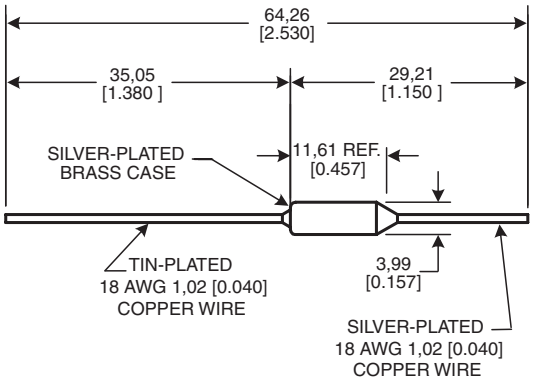


**NAME**
DXXX-001

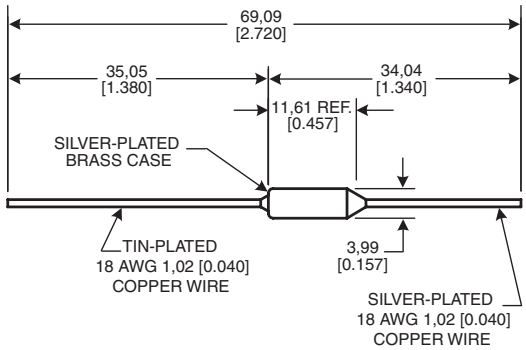


**NAME**
DXXX-003

# RD Series

The RD Series responds to temperature by interrupting an electrical circuit when the operating and/or environmental temperature exceeds the thermal rating of the fuse. This is accomplished when the organic pellet experiences a phase change, allowing the spring activated contacts to permanently open the circuit.

The electrical resistance of an RD Series thermal cutoff is comparable to that found in an equal length of 18 gage solid copper wire. With proper heat flow, heat generation below 15 A is minimal. Above 15 A, the upper limit on current capacity will depend on the environment for each specification.

**Operating temperature range:** 72 °C to 240 °C [162 °F to 464 °F]
**Environmental exposure range:** see notice on previous page

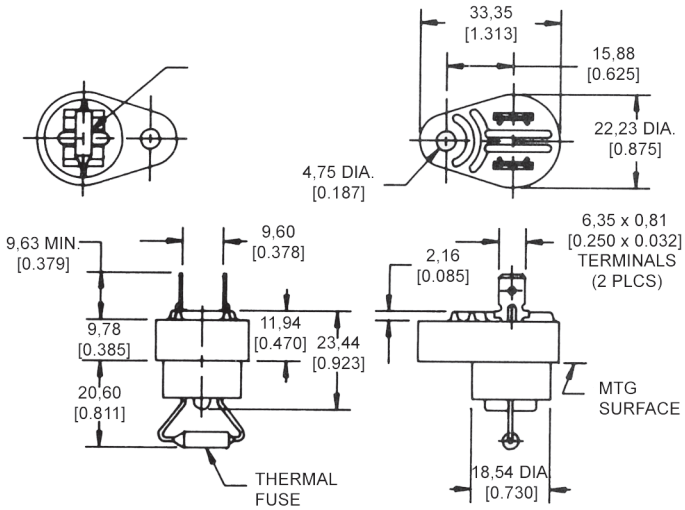


**NAME**
RDXXX-001

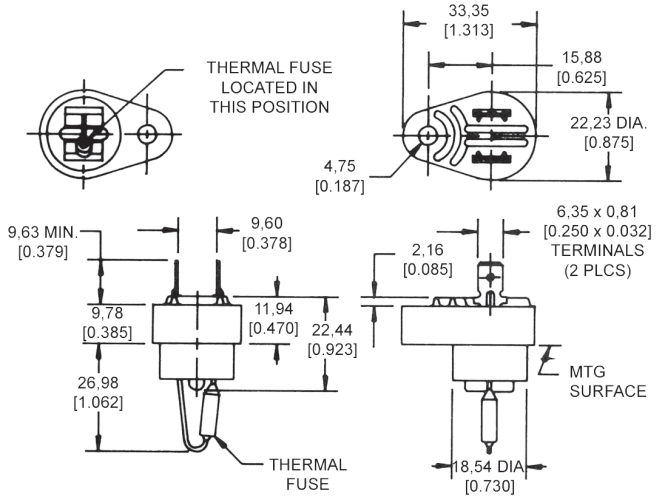


**NAME**
RDXXX-002

# Thermostats - Redi-Temp®

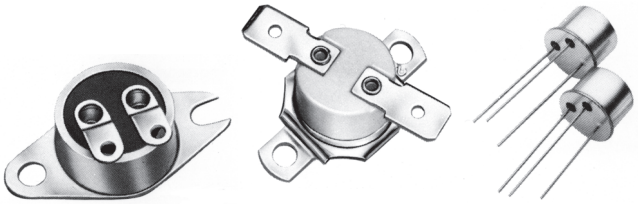

Redi-Temp® is a line of standard thermostat products offered in a range of pre-set temperatures. These products are available standard for immediate delivery. They are often useful for low-volume applications where standard configurations are acceptable, as well as for evaluating new designs and prototypes.

## 3455RC 15 A High Temperature Universal Thermostat Series

Shipped from stock, the 3455RC Series thermostats are often suitable for applications such as copy machines, power supplies, telecommunications and ovens. UL, CSA and European approval agencies listings available.

| | |
|---|---|
| **Electrical rating:** | 15 A resisitive max., 120 Vac |
| **Housing material:** | High density ceramic base |
| **Operating temperature range:** | 0 °C to 150 °C [32 °F to 302 °F] |
| **Environmental exposure range:** | -18 °C to 288 °C [0 °F to 550 °F] |

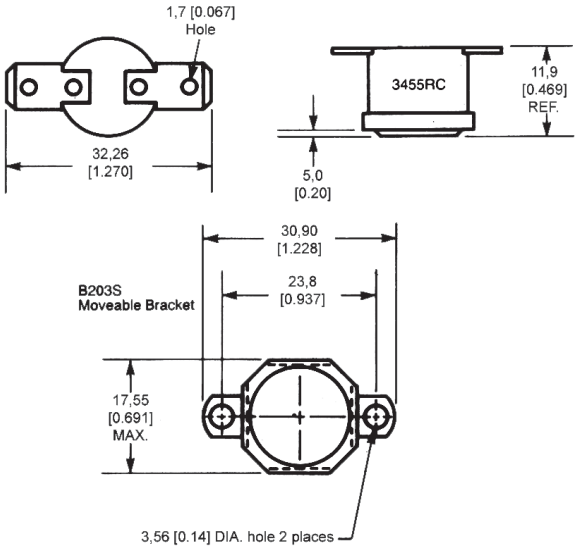


### Open on rise

| OPEN/CLOSE °F | OPEN/CLOSE °C | REFERENCE |
|---|---|---|
| 65 ±5/30 ±8 | 18 ±3/-1 ±5 | 3455RC-100-220 |
| 75 ±5/40 ±8 | 24 ±3/4 ±5 | 3455RC-100-221 |
| 85 ±5/55 ±8 | 29 ±3/13 ±5 | 3455RC-100-222 |
| 95 ±5/65 ±8 | 35 ±3/18 ±5 | 3455RC-100-223 |
| 105 ±5/75 ±8 | 41 ±3/24 ±5 | 3455RC-100-224 |
| 115 ±5/85 ±8 | 46 ±3/29 ±5 | 3455RC-100-225 |
| 125 ±5/95 ±8 | 52 ±3/35 ±5 | 3455RC-100-226 |
| 135 ±5/105 ±8 | 57 ±3/41 ±5 | 3455RC-100-227 |
| 145 ±5/115 ±8 | 63 ±3/46 ±5 | 3455RC-100-228 |
| 155 ±5/125 ±8 | 68 ±3/52 ±5 | 3455RC-100-229 |
| 165 ±5/135 ±8 | 73 ±3/57 ±5 | 3455RC-100-230 |
| 175 ±5/145 ±8 | 79 ±3/63 ±5 | 3455RC-100-231 |
| 185 ±5/155 ±8 | 85 ±3/68 ±5 | 3455RC-100-232 |
| 195 ±5/165 ±8 | 91 ±3/73 ±5 | 3455RC-100-233 |
| 205 ±6/175 ±8 | 96 ±4/79 ±5 | 3455RC-100-234 |
| 215 ±6/185 ±8 | 102 ±4/85 ±5 | 3455RC-100-235 |
| 225 ±6/195 ±8 | 107 ±4/91 ±5 | 3455RC-100-236 |
| 235 ±6/205 ±8 | 113 ±4/96 ±5 | 3455RC-100-237 |
| 245 ±6/215 ±8 | 118 ±4/102 ±5 | 3455RC-100-238 |
| 255 ±7/225 ±8 | 124 ±4/107 ±5 | 3455RC-100-239 |
| 275 ±7/245 ±8 | 135 ±4/118 ±5 | 3455RC-100-240 |
| 295 ±7/265 ±8 | 146 ±4/129 ±5 | 3455RC-100-241 |
| 315 ±10/275 ±15 | 157 ±6/135 ±8 | 3455RC-100-242 |

### Close on rise

| CLOSE/OPEN °F | CLOSE/OPEN °C | REFERENCE |
|---|---|---|
| 70 ±8/35 ±5 | 21 ±5/2 ±3 | 3455RC-100-243 |
| 90 ±8/60 ±5 | 32 ±5/16 ±3 | 3455RC-100-244 |
| 110 ±8/80 ±5 | 43 ±5/27 ±3 | 3455RC-100-245 |
| 130 ±8/100 ±5 | 54 ±5/38 ±3 | 3455RC-100-246 |
| 150 ±8/120 ±5 | 66 ±5/49 ±3 | 3455RC-100-247 |
| 170 ±8/140 ±5 | 77 ±5/60 ±3 | 3455RC-100-248 |
| 190 ±8/160 ±5 | 88 ±5/71 ±3 | 3455RC-100-249 |
| 210 ±8/180 ±6 | 99 ±5/82 ±4 | 3455RC-100-250 |
| 230 ±8/200 ±6 | 110 ±4/93 ±4 | 3455RC-100-251 |

# 3100 SPST Hermetic Thermostat Series

Shipped from stock, the 3100 Series thermostats are often suitable for applications such as computers, medical electronics, power supplies, industrial controls and test equipment. They feature a laser-welded hermetic seal, are pre-set and tamper-proof. UL listings available.

**Electrical rating:** 30 A resisitive max., 120 Vac/240 Vac
**Environmental exposure range:** -62 °C to 288 °C [-80 °F to 550 °F]

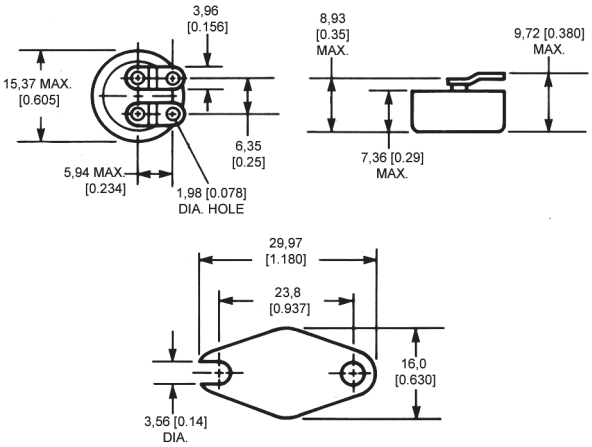


## Open on rise

| OPEN/CLOSE °F | OPEN/CLOSE °C | REFERENCE |
|---|---|---|
| 40 ±5/20 ±5 | 4 ±3/-7 ±3 | 3100U-3-1431 |
| 50 ±5/30 ±5 | 10 ±3/-1 ±3 | 3100U-3-1432 |
| 60 ±5/40 ±5 | 16 ±3/4 ±3 | 3100U-3-1433 |
| 70 ±5/50 ±5 | 21 ±3/10 ±3 | 3100U-3-1434 |
| 80 ±5/60 ±5 | 27 ±3/16 ±3 | 3100U-3-1435 |
| 90 ±5/70 ±5 | 32 ±3/21 ±3 | 3100U-3-1436 |
| 100 ±5/80 ±5 | 38 ±3/27 ±3 | 3100U-3-1437 |
| 110 ±5/90 ±5 | 43 ±3/32 ±3 | 3100U-3-1438 |
| 120 ±5/100 ±5 | 49 ±3/38 ±3 | 3100U-3-1439 |
| 130 ±5/110 ±5 | 54 ±3/43 ±3 | 3100U-3-1440 |
| 140 ±5/120 ±5 | 60 ±3/49 ±3 | 3100U-3-1441 |
| 150 ±5/130 ±5 | 66 ±3/54 ±3 | 3100U-3-1442 |
| 160 ±5/140 ±5 | 71 ±3/60 ±3 | 3100U-3-1443 |
| 170 ±5/150 ±5 | 77 ±3/66 ±3 | 3100U-3-1444 |
| 180 ±5/160 ±5 | 82 ±3/71 ±3 | 3100U-3-1445 |
| 190 ±5/170 ±5 | 88 ±3/77 ±3 | 3100U-3-1446 |
| 200 ±5/180 ±5 | 93 ±3/82 ±3 | 3100U-3-1447 |
| 210 ±8/185 ±6 | 99 ±5/85 ±4 | 3100U-3-1448 |
| 220 ±8/195 ±6 | 104 ±5/91 ±4 | 3100U-3-1449 |
| 230 ±8/205 ±6 | 110 ±5/96 ±4 | 3100U-3-1450 |
| 240 ±8/215 ±6 | 116 ±5/102 ±4 | 3100U-3-1451 |
| 250 ±8/225 ±6 | 121 ±5/107 ±4 | 3100U-3-1452 |

## Close on rise

| CLOSE/OPEN °F | CLOSE/OPEN °C | REFERENCE |
|---|---|---|
| 40 ±5/20 ±5 | 4 ±3/-7 ±3 | 3100U-3-1453 |
| 50 ±5/30 ±5 | 10 ±3/-1 ±3 | 3100U-3-1454 |
| 60 ±5/40 ±5 | 16 ±3/4 ±3 | 3100U-3-1455 |
| 80 ±5/60 ±5 | 27 ±3/16 ±3 | 3100U-3-1456 |
| 100 ±5/80 ±5 | 38 ±3/27 ±3 | 3100U-3-1457 |
| 120 ±5/100 ±5 | 49 ±3/38 ±3 | 3100U-3-1458 |
| 140 ±5/120 ±5 | 60 ±3/49 ±3 | 3100U-3-1459 |
| 160 ±5/140 ±5 | 71 ±3/60 ±3 | 3100U-3-1460 |
| 180 ±5/160 ±5 | 82 ±3/71 ±3 | 3100U-3-1461 |
| 200 ±5/180 ±5 | 93 ±3/82 ±3 | 3100U-3-1462 |
| 220 ±6/195 ±8 | 104 ±4/91 ±5 | 3100U-3-1463 |

# 3600 Series Subminiature Thermostats TO-5 Package

Shipped from stock, the 3600 Series thermostats feature logic-level switching with gold contacts, have no power budget and are wave solderable with a hermetic seal. They are often suitable for applications such as power supplies, logic boards, telecommunications, medical electronics and robotics.

**Electrical rating:** 15 A resisitive max., 120 Vac
**Dielectric strength:** 500 Vac, 60 Hz for 1 s
**Operating temperature range:** -40 °C to 100 °C [-40 °F to 212 °F]
**Environmental exposure range:** -50 °C to 177 °C [58 °F to 351 °F]

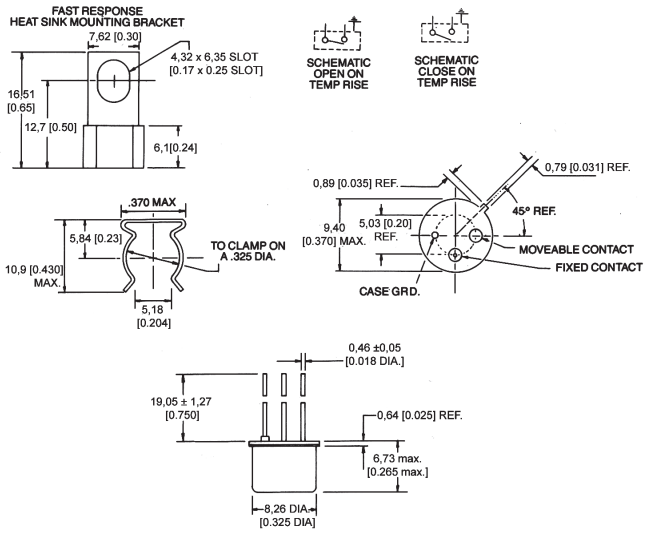


## Open on rise

| OPEN/CLOSE °C | MIN DIFF. °C | REFERENCE |
|---|---|---|
| 40 ±5 | 2 | 3600040010001 |
| 45 ±5 | 2 | 3600045010001 |
| 50 ±5 | 2 | 3600050010001 |
| 55 ±5 | 5 | 3600055010001 |
| 60 ±5 | 5 | 3600060010001 |
| 65 ±5 | 5 | 3600065010001 |
| 70 ±5 | 5 | 3600070010001 |
| 75 ±5 | 5 | 3600075010001 |
| 80 ±5 | 5 | 3600080010001 |
| 85 ±5 | 7 | 3600085010001 |
| 90 ±5 | 7 | 3600090010001 |
| 95 ±5 | 7 | 3600095010001 |
| 100 ±5 | 7 | 3600100010001 |

## Close on rise

| OPEN/CLOSE °C | MIN DIFF. °C | REFERENCE |
|---|---|---|
| 40 ±7 | 2 | 3601040010001 |
| 45 ±7 | 2 | 3601045010001 |
| 50 ±7 | 2 | 3601050010001 |
| 55 ±7 | 5 | 3601055010001 |
| 60 ±7 | 5 | 3601060010001 |
| 65 ±7 | 5 | 3601065010001 |
| 70 ±7 | 5 | 3601070010001 |
| 75 ±7 | 5 | 3601075010001 |
| 80 ±7 | 5 | 3601080010001 |
| 85 ±7 | 7 | 3601085010001 |
| 90 ±7 | 7 | 3601090010001 |
| 95 ±7 | 7 | 3601095010001 |
| 100 ±7 | 7 | 3601100010001 |

# Thermostats - Commercial

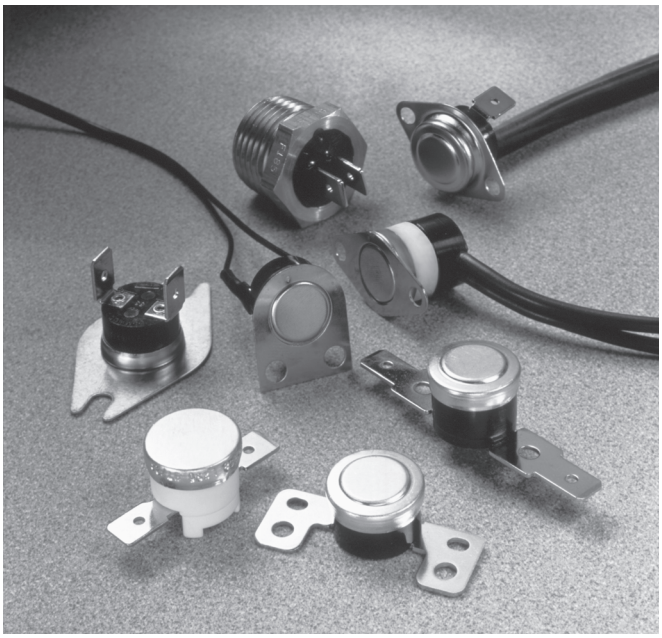

Commercial thermostats include products for use in a wide array of small and major appliances, automotive applications, office copy machines, heat and smoke detectors and HVAC equipment. These snap-action thermostats include automatic or manual reset options, phenolic or ceramic housings, and a variety of mounting brackets and terminal options.

NOTE: The products in this section do not follow the "how to use this catalogue" instructions provided in the catalogue introduction. Specific reference numbers are not given due to their custom nature. Please contact your local Honeywell sales office for ordering information.

## NOTICE

Limitations: Type 2455RM/2450CM is intended as a manual reset control. It is not to be used on applications where a limit thermostat is required unless backup protection is provided. Units have been tested by UL for 1,000 cycles under load, 5,000 cycles no load, and are not considered limit devices.

## ⚠WARNING

**PERSONAL INJURY**

Do not use the bi-metallic, snap action thermostat components as final safety devices in any application. Their intended use is to provide an electrical disruption in the application circuit in the event of a change in temperature conditions.

**Failure to comply with these instructions could result in death or serious injury.**

## 2450R/2450HR/2455R Series Phenolic Automatic Reset Thermostats

A temperature-sensitive bimetal disc, electrically isolated from the switch, actuates the normally closed contacts. The contacts open when the surface or ambient temperatures increase to the operating snap point of the calibrated disc. Response to temperature changes is extremely rapid due to the inherently low mass of the disc and the small size of the product. These products are factory calibrated to the customer's specification.

| | |
|---|---|
| **Reset type:** | Automatic |
| **Amperage capacity:** | 15 A resistive max. |
| **Housing material:** | Phenolic |
| **Operating temperature range:** | 0 °C to 150 °C [32 °F to 302 °F] |
| **Environmental exposure range:** | 0 °C to 150 °C [32 °F to 302 °F] |

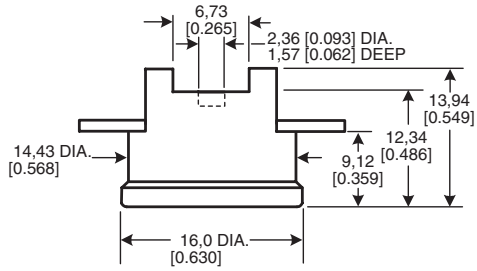


**SERIES NAME**
2450HR Phenolic Automatic Reset Thermostat

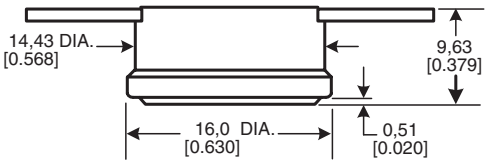


**SERIES NAME**
2450R Phenolic Automatic Reset Thermostat

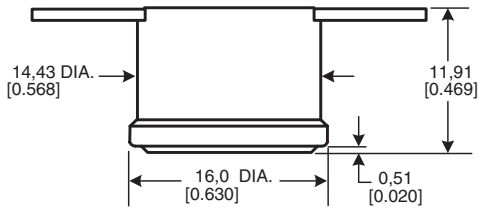


**SERIES NAME**
2455R Phenolic Automatic Reset Thermostat

## 2450RC/2450RCH/2455RC Series Ceramic Automatic Reset Thermostats

A temperature-sensitive bimetal disc, electrically isolated from the switch, actuates the normally closed contacts. The contacts open when the surface or ambient temperatures increase to the operating snap point of the calibrated disc. Response to temperature changes is extremely rapid due to the inherently low mass of the disc and the small size of the product.

| | |
|---|---|
| **Reset type:** | Automatic |
| **Amperage capacity:** | 15 A resistive max. |
| **Housing material:** | Ceramic |
| **Operating temperature range:** | 0 °C to 260 °C [32 °F to 500 °F] |
| **Environmental exposure range:** | -20 °C to 287 °C [0 °F to 550 °F] |

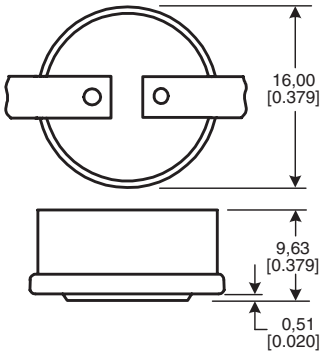


**SERIES NAME**
2450RC Ceramic Automatic Reset Thermostat

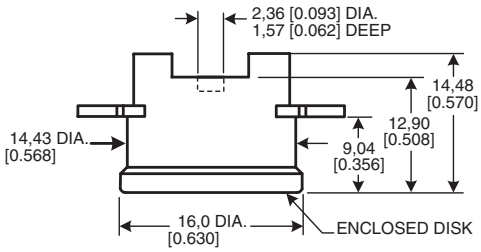


**SERIES NAME**
2450RCH Ceramic Automatic Reset Thermostat

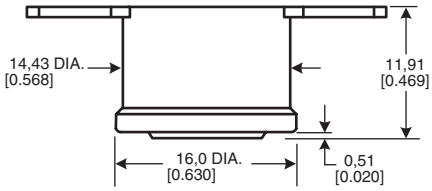


**SERIES NAME**
2455RC Ceramic Automatic Reset Thermostat

## 2450CM/2455RM Series Ceramic and Phenolic Manual Reset Thermostats

A temperature-sensitive bimetal disc, electrically isolated from the switch, actuates the normally closed contacts. The contacts open when the surface or ambient temperatures increase to the operating snap point of the calibrated disc. The circuit will stay open above room ambient temperature until the manual reset button is pressed. Response to temperature changes is extremely rapid due to the inherently low mass of the disc and the small size of the product.

| | |
|---|---|
| **Reset type:** | Manual |
| **Amperage capacity:** | 15 A resistive max. |
| **Housing material:** | Ceramic or phenolic |
| **Operating temperature range:** | 52 °C to 232 °C [125 °F to 450 °F] (ceramic)<br>52 °C to 150 °C [125 °F to 302 °F] (phenolic) |
| **Environmental exposure range:** | 10 °C to 260 °C [50 °F to 500 °F] (ceramic)<br>10 °C to 150 °C [50 °F to 302 °F] (phenolic) |

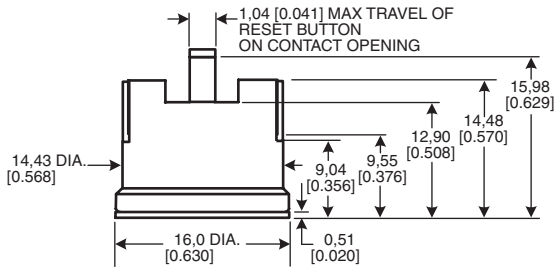


**SERIES NAME**
2450CM Ceramic Manual Reset Thermostat

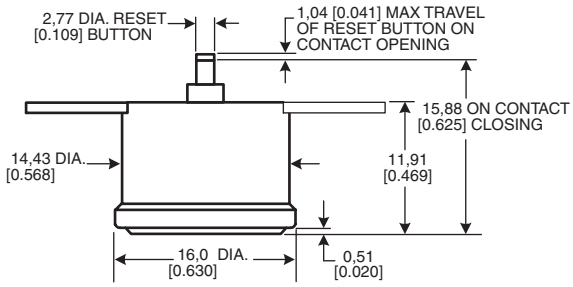


**SERIES NAME**
2455RM Phenolic Manual Reset Thermostat

## 2450A/2455RA Series Heat Detection Thermostats

The gold contacts open or close on a temperature rise of 47 ˚C to 107 ˚C [117 ˚F to 225 ˚F].

**Reset type:** Automatic
**Amperage capacity:** 15 A resistive max.
**Housing material:** Phenolic, epoxy-sealed cap and terminals
**Operating temperature range:** 47 °C to 107 °C [117 °F to 225 °F]
**Environmental exposure range:** 0 °C to 150 °C [32 °F to 302 ° F]

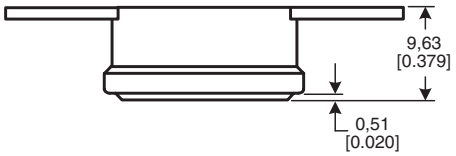


**SERIES NAME**
2450A Heat Detection Thermostat

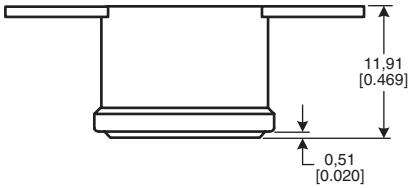


**SERIES NAME**
2455A Heat Detection Thermostat

## 2455RBV Series Overmolded Automatic Reset Thermostats

A temperature-sensitive bimetal disc, electrically isolated from the switch, actuates the normally closed contacts. The contacts open when the surface or ambient temperatures increase to the operating snap point of the calibrated disc. Response to temperature changes is extremely rapid due to the inherently low mass of the disc and the small size of the product.

**Reset type:** Automatic
**Amperage capacity:** 15 A resistive max.
**Housing material:** Ceramic or phenolic, epoxy overmold
**Operating temperature range:** -12 °C to 105 °C [10 °F to 221 °F]
**Environmental exposure range:** -18 °C to 121 °C [0 °F to 250 °F]

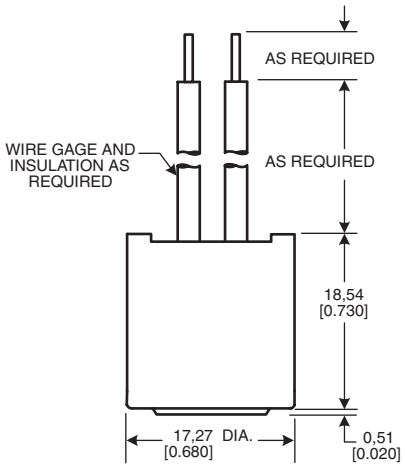


**SERIES NAME**
2455RBV Overmolded Automatic Reset Thermostat

## 2450R/2450RCH/2455R/2455RCH/ 2467RC/2467RCH Series "One-shot" ½ in Thermostats

Products are designed for high limit applications where automatic reset is not desired.

**Reset type:** None
**Amperage capacity:** 15 A resistive max.
21 A resistive max. (2467RC/2467RCH Series)
**Housing material:** ceramic or phenolic, with or without epoxy-sealed cap and terminal
**Operating temperature range:** 52 °C to 260 °C [125 °F to 500 °F] (ceramic)
52 °C to 250 °C [125 °F to 500 °F] (ceramic) (2467RC Series)
52 °C to 150 °C [125 °F to 302 °F] (phenolic)
**Environmental exposure range:** -18 °C to 316 °C [0 °F to 600 °F] (ceramic)
-18 °C to 150 °C [0 °F to 302 °F] (phenolic)

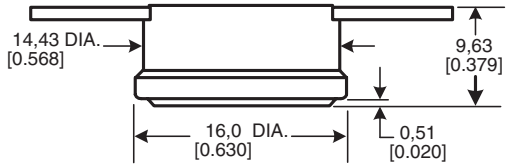


**SERIES NAME**
2450R Phenolic "One-shot" ½ in Thermostat

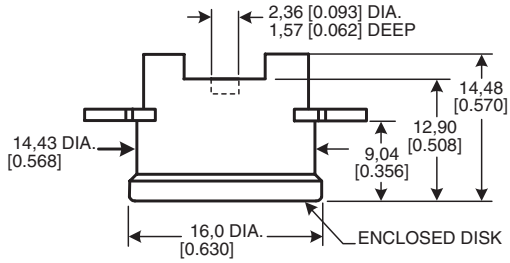


**SERIES NAME**
2450RCH Ceramic "One-shot" ½ in Thermostat
2467RCH Ceramic "One-shot" ½ in Thermostat

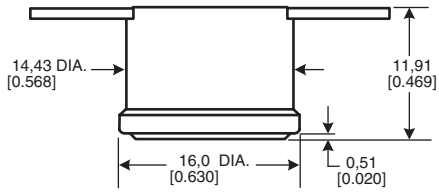


**SERIES NAME**
2455R Phenolic "One-shot" ½ in Thermostat

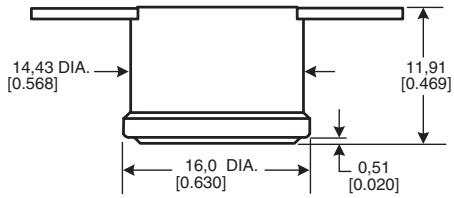


**SERIES NAME**
2455RC Ceramic "One-shot" ½ in Thermostat
2467RC Ceramic "One-shot" ½ in Thermostat

## 2450R Series Annular Ring Cap Automatic Reset Thermostats

A temperature-sensitive bimetal disc, electrically isolated from the switch, actuates the normally closed contacts. The contacts open when the surface or ambient temperatures increase to the operating snap point of the calibrated disc. Response to temperature changes is extremely rapid due to the inherently low mass of the disc and the small size of the product.

| | |
|---|---|
| **Reset type:** | Automatic |
| **Amperage capacity:** | 15 A resistive, 12 Vdc |
| **Housing material:** | Phenolic, can be partially or totally sealed against water ingress |
| **Operating temperature range:** | -10 °C to 55 °C [14 °F to 131 °F] |
| **Environmental exposure range:** | -40 °C to 130 °C [-40 °F to 266 °F] |
| **Life cycle capability:** | 300 K at 12 Vdc, 10 A |
| **Low temperature differential:** | Down to 8 °C [46 °F] |
| **Switch temperature tolerance:** | ±3 °C |

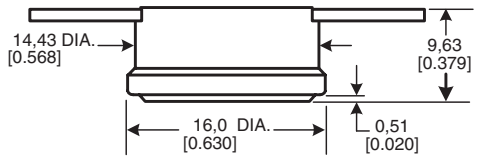


**SERIES NAME**
2450R Phenolic Annular Ring Cap Automatic Reset Thermostat

## 2450R/2455R Series Protected Thermostats

A temperature-sensitive bimetal disc, electrically isolated from the switch, actuates the normally closed contacts. The contacts open when the surface or ambient temperatures increase to the operating snap point of the calibrated disc. Basic thermostat is protected from the environment by sealing it in a metal housing or encapsulating it in epoxy.

| | |
|---|---|
| **Reset type:** | Automatic |
| **Amperage capacity:** | 15 A resistive, 12 Vdc |
| **Housing material:** | Brass, aluminium, stainless steel and epoxy |
| **Operating temperature range:** | 15 °C to 130 °C [59 °F to 266 °F] |
| **Environmental exposure range:** | -40 °C to 155 °C [-40 °F to 311 °F] |

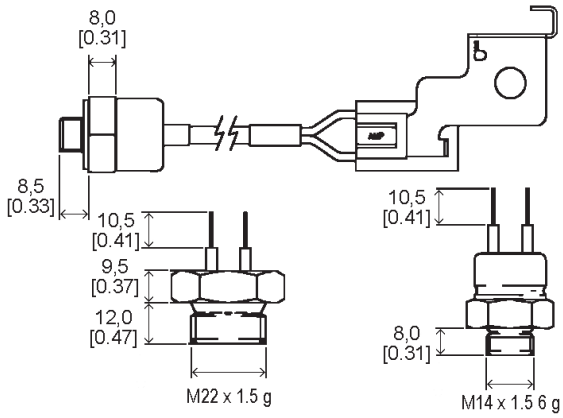


**SERIES NAME**
2450R Protected Thermostat
2455R Protected Thermostat

## 2450R Series Fully Sealed Thermostats

A temperature-sensitive bimetal disc, electrically isolated from the switch, actuates the normally closed contacts. The contacts open when the surface or ambient temperatures increase to the operating snap point of the calibrated disc. Response to temperature changes is extremely rapid due to the inherently low mass of the disc and the small size of the product.

| | |
|---|---|
| **Reset type:** | Automatic |
| **Amperage capacity:** | 15 A resistive, 12 Vdc |
| **Housing material:** | Phenolic housing, aluminium cap totally encapsulated in water-resistant epoxy |
| **Operating temperature range:** | -10 °C to 55 °C [14 °F to 131 °F] |
| **Environmental exposure range:** | -40 °C to 130 °C [-40 °F to 266 °F] |
| **Life cycle capability:** | 300 K at 12 Vdc, 10 A |
| **Low temperature differential:** | Down to 8 °C [46 °F] |
| **Switch temperature tolerance:** | ±3 °C |

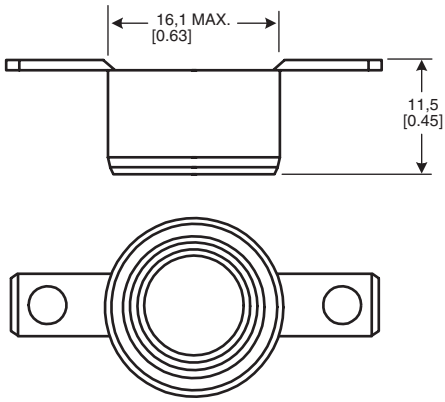


**SERIES NAME**
2450R Fully Sealed Thermostat

## Standard Terminal Guide

### Horizontal Solder

**T-101**

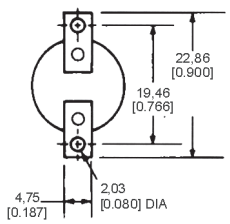


### Vertical Solder Inside

**T-106**

Not avail on 55RM

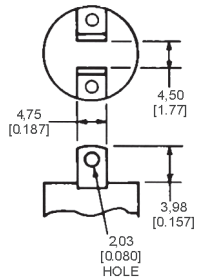


### Vertical Solder Outside

**T-107**

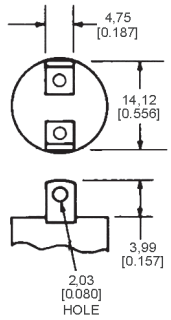


**T-140**

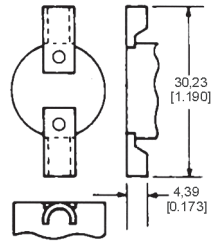


CRIMP TYPE TERMINAL
Specify wire gage, type and direction of crimp

### 1/4 in Quick Connect, Horizontal

**T-146**

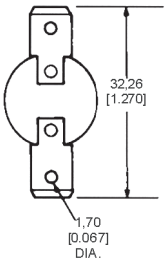


### 1/4 in Quick Connect, Vertical

**T-147**

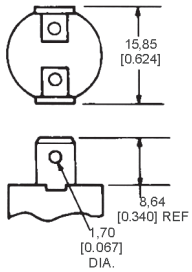


### 3/16 in Quick Connect, Flat

**T-149**

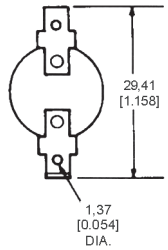


### 3/16 in Quick Connect Vertical

**T-150**

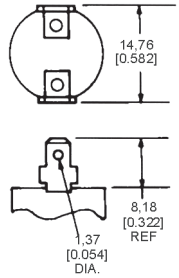


### Special Terminals

**T-102**

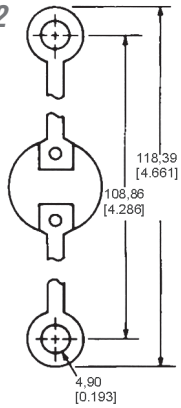


**T-103**

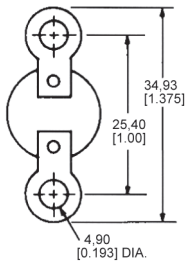


**T-120**

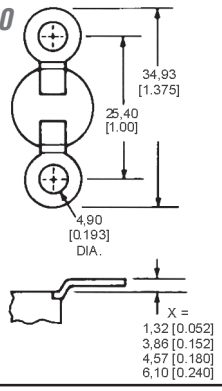


### Specify Crimp Direction Up or Down

**T-105**

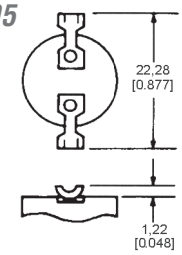


**T-121**

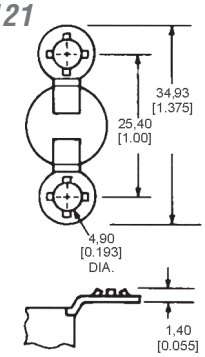


**T-115**

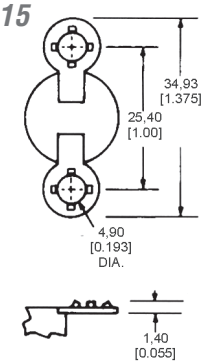

## Standard Terminal Guide (continued)

### Horizontal Weld Tab

**T-141**

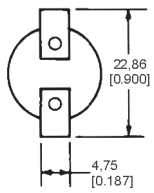


### 1/4 in Quick Connect, 45°

**T-148**

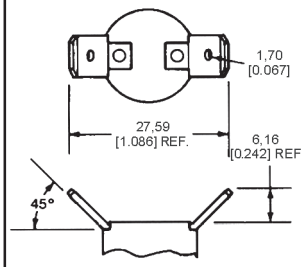


### 3/16 in Quick Connect, 45°

**T-151**

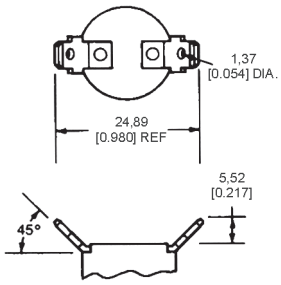


### Spade Terminal

**T-160**

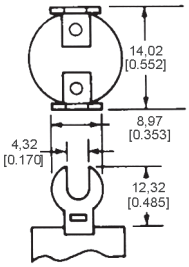


**T-161**

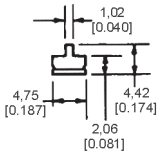


**T-162**

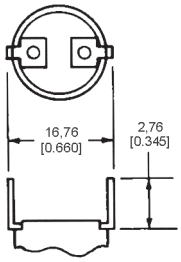


**T-164**

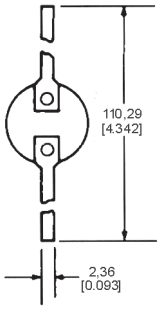


**T-165**

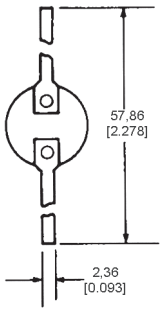


**T-166**

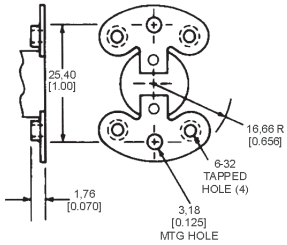


**T-167**

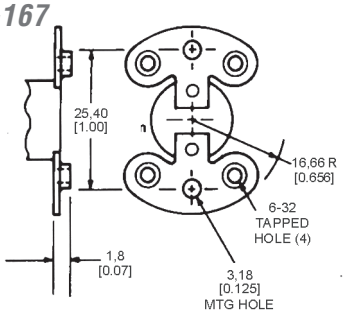


**T-168**

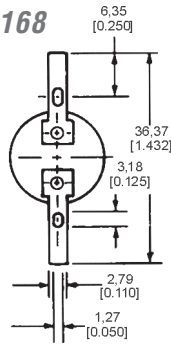


**T-169**

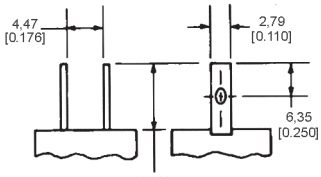


**T-170**

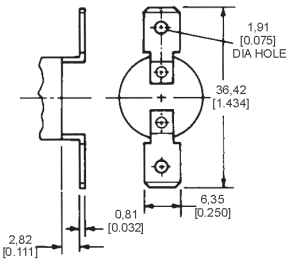


**T-178**

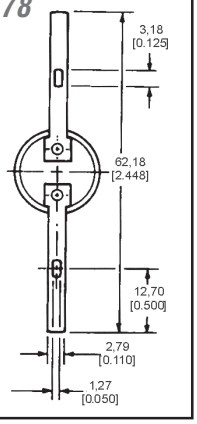


**T-179**

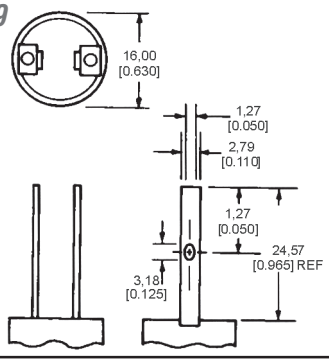


**T-188**

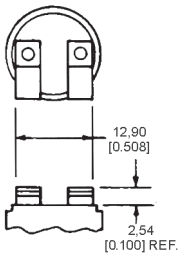

# Standard Mounting Bracket Guide

## Stationary Surface Brackets

### B-201/B-201A/B-201B

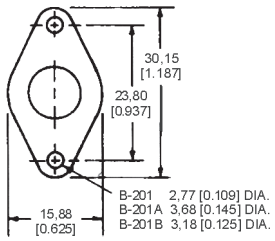


## Moveable Surface Brackets

### B-203/B-203A/B-203B

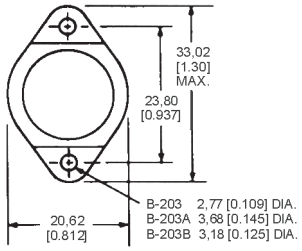


## Air Stream Brackets

### B205/B205A

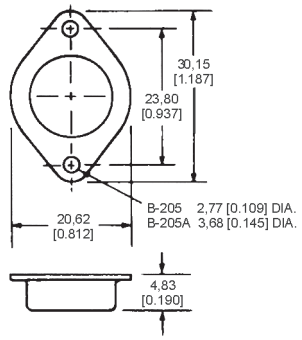


## Special Mounting Brackets

### B-206

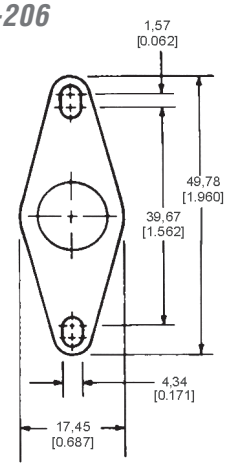


### B-207

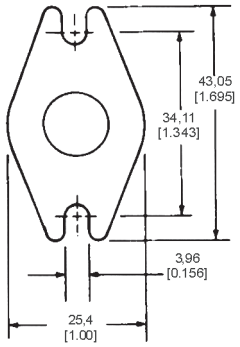


### B-209

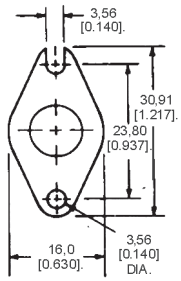


### B-210

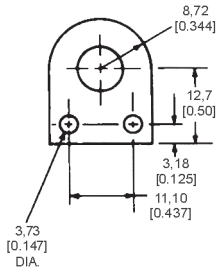


### B-212/B-212A

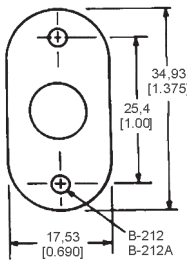


### B-213

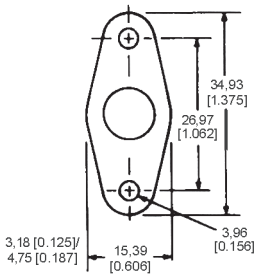


### B-230

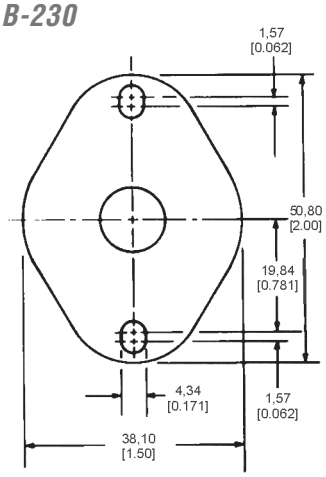


### B-239

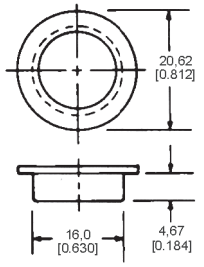

## Standard Mounting Bracket Guide (continued)

### B-246

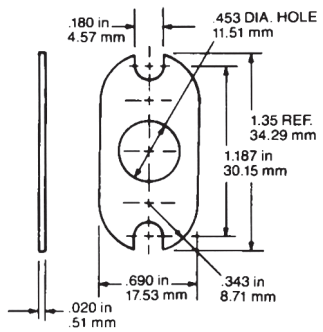


### B-249

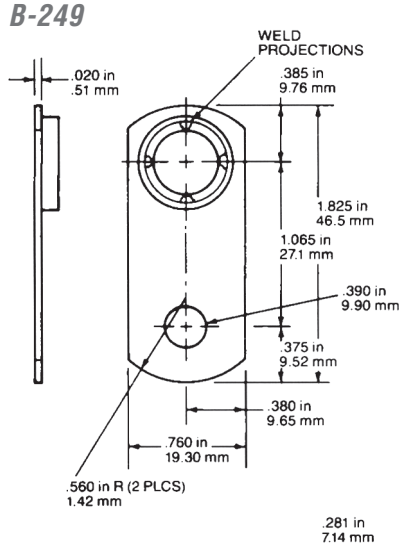


### B-250

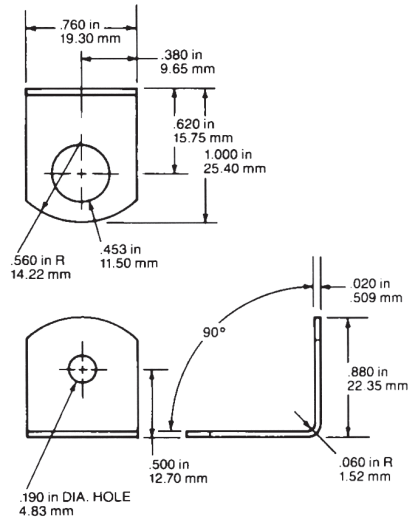


### Mounting Studs

### Brass Hex Stud Mount

### B-220-B-227

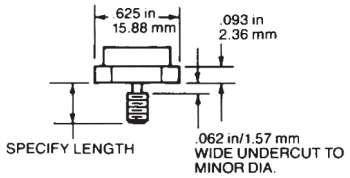


| | |
|---|---|
| B-220 | 6-32 |
| B-221 | 8-32 |
| B-222 | 10-24 |
| B-223 | 10-32 |
| B-224 | M3 × 0.5 |
| B-225 | M4 × 0.7 |
| B-226 | M5 × 0.8 |
| B-227 | M6 × 1.0 |

### B-240

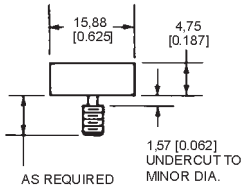


| | |
|---|---|
| #6 - 32 | M3 X 0.3 |
| #8 - 32 | M4 X 0.7 |
| #10 - 24 | M5 X 0.8 |
| #10 - 32 | M6 X 1.0 |

### Bracket/Terminal Orientation (Intermediate angles available on specific request.)

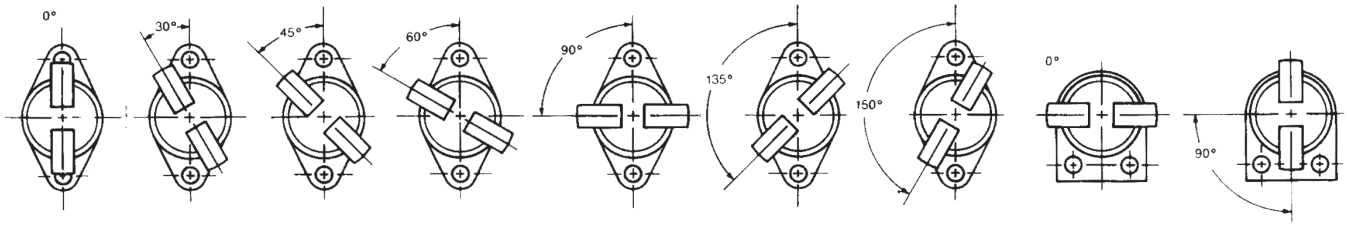

# Thermostats - Precision

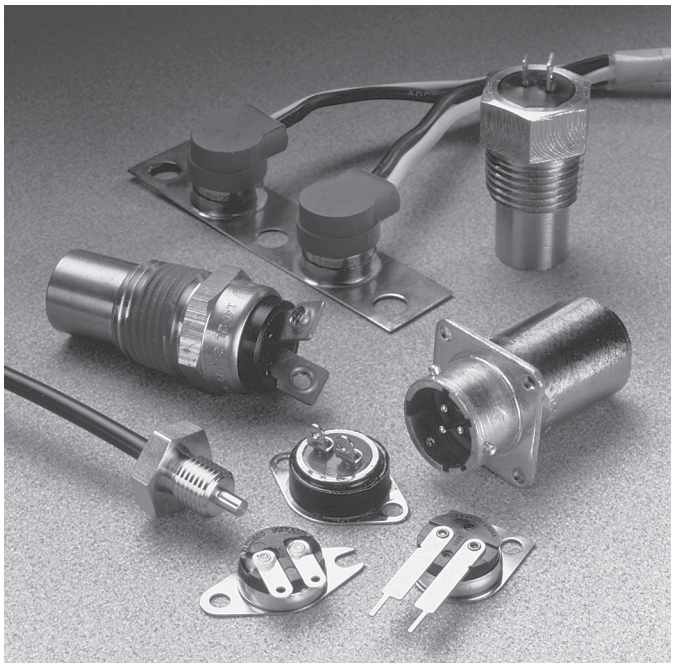

Precision snap-action thermostats include both hermetic and non-hermetic devices for use in a wide array of applications including computers, copy machines, aircraft, radar equipment, medical equipment and electronic control systems. We also offer custom-packaged thermostats for application flexibility and industrial-grade thermostats designed to operate in extreme environmental conditions.

NOTE: The products in this section do not follow the "how to use this catalogue" instructions provided in the catalogue introduction. Specific reference numbers are not given due to their custom nature. Please contact your local Honeywell sales office for ordering information.

**NOTICE**

Limitations: Type 3455RM/3450CM is intended as a manual reset control. It is not to be used on applications where a limit thermostat is required unless backup protection is provided. Units have been tested by UL for 1,000 cycles under load, 5,000 cycles no load, and are not considered limit devices.

**⚠ WARNING**
**PERSONAL INJURY**

Do not use the bi-metallic, snap action thermostat components as final safety devices in any application. Their intended use is to provide an electrical disruption in the application circuit in the event of a change in temperature conditions.

**Failure to comply with these instructions could result in death or serious injury.**

## 3001/3004 Series Non-Hermetic Thermostats

The 3001/3004 Series are factory pre-set, single pole, single throw thermal switches available to open and close on temperature rise. The phenolic base is made dust-proof by a metal closure which also provides thermal and electrical isolation for the silver contacts. The low silhouette design of the 3001 Series makes it an excellent choice where a non-hermetic precision unit is required for tight tolerances. The 3004 Series offers a metal sleeve insert-rivet construction and higher spacing to meet European approval agency requirements. It is also UL recognized and CSA certified.

**Amperage:** 1 A to 3 A (3001, 3001U Series)* 2 A to 4 A (3004 Series)*
**Housing material:** Phenolic base with metal closure
**Operating temperature range:** -18 °C to 168 °C [0 °F to 335 °F]
**Environmental exposure range:** -18 °C to 177 °C [0 °F to 350 °F]
**Dielectric strength:** MIL-STD-202, Method 301
1500 Vac 60 Hz terminal to case (2000 Vac 3004)
**Insulation resistance:** MIL-STD-202, Method 302, Cond. B
500 MOhm, 500 Vdc applied
**Contact resistance:** MIL-STD-202, Method 307, 50 mOhm
**Hermetic seal:** MIL-STD-202, Method 112, Cond. A, $1x10^{-5}$ atm cc/s
**Moisture resistance:** MIL-STD-202, Method 106
*Based on 240 Vac and life-cycle dependent. Call for further details.

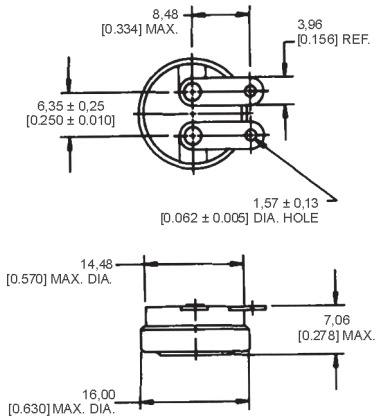


**SERIES NAME**
3001 Series Non-Hermetic Thermostat
3001U Series Non-Hermetic Thermostat
3004 Series Non-Hermetic Thermostat

## 3100/3106 Series Hermetic Thermostats

The 3100/3106 Series is a single pole, single throw switch activated by a snap-action bimetal disc. Temperature calibrations are pre-set at the factory and each unit is 100 % thermally and mechanically inspected. It is available to open or close on temperature rise. The case is laser welded to form a hermetically-sealed steel housing with a glass-to-metal seal at the terminal junction. It is manufactured and tested to meet or exceed critical commercial and industrial specifications. The 3106 Series has gold alloy contacts for low voltage applications.

**Amperage:** 0.5 A resistive (3106 Series)
7 A resistive (3100 Series)
**Housing material:** Steel housing with glass-to-metal seal at terminal junction
**Operating temperature range:** -29 °C to 260 °C [-20 °F to 500 °F] (3100 Series)
-29 °C to 204 °C [-20 °F to 400 °F] (3106 Series)
**Environmental exposure range:** -62 °C to 288 °C [-80 °F to 550 °F]
**Dielectric strength:** MIL-STD-202, Method 301
1250 Vac 60 Hz terminal to case (3100, 3100U, 3106 Series)
1500 Vac 60 Hz terminal to case (3100UX Series)
**Insulation resistance:** MIL-STD-202, Method 302, Cond. B
50 MOhm, 500 Vdc applied
**Contact resistance:** MIL-STD-202, Method 307
25 mOhm (3106 Series)
50 mOhm (3100 Series)
**Hermetic seal:** MIL-STD-202, Method 112, Cond. A
$1x10^{-5}$ atm cc/s
**Moisture resistance:** MIL-STD-202, Method 106

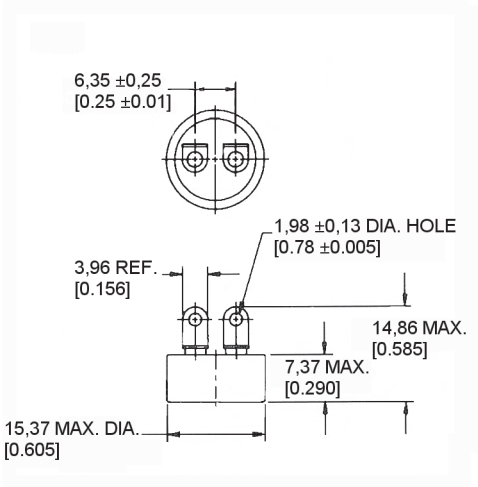


**SERIES NAME**
3100 Hermetic Thermostat
3100U Hermetic Thermostat
3100UX Hermetic Thermostat
3106 Hermetic Thermostat

## 3150/3156 Series Low Silhouette Hermetic Thermostats

The 3150/3156 Series is a single pole, single throw switch activated by a snap-action bimetal disc. Temperature calibrations are pre-set at the factory and each unit is 100 % thermally and mechanically inspected. It is available to open or close on temperature rise. The case is laser welded to form a hermetically-sealed steel housing with a glass-to-metal seal at the terminal junction. The low silhouette and compact design often make it especially well suited for applications that require miniaturization. The 3156 Series has gold alloy contacts for low voltage applications.

**Amperage:** 0.5 A resistive (3156 Series)
7 A resistive (3150 Series)
**Housing material:** Steel housing with glass-to-metal seal at terminal junction
**Operating temperature range:** -29 °C to 177 °C [-20 °F to 350 °F]
**Environmental exposure range:** -62 °C to 260 °C [-80 °F to 500 °F]
**Dielectric strength:** MIL-STD-202, Method 301
750 Vac 60 Hz terminal to case (3150, 3156 Series)
1250 Vac 60 Hz terminal to case (3150U, 3156U Series)
1500 Vac 60 Hz terminal to case (3150UX Series)
**Insulation resistance:** MIL-STD-202, Method 302, Cond. B
50 MOhm, 500 Vdc applied
**Contact resistance:** MIL-STD-202, Method 307
25 mOhm (3156 Series)
50 mOhm (3150 Series)
**Hermetic seal:** MIL-STD-202, Method 112, Cond. A
$1x10^{-5}$ atm cc/s
**Moisture resistance:** MIL-STD-202, Method 106

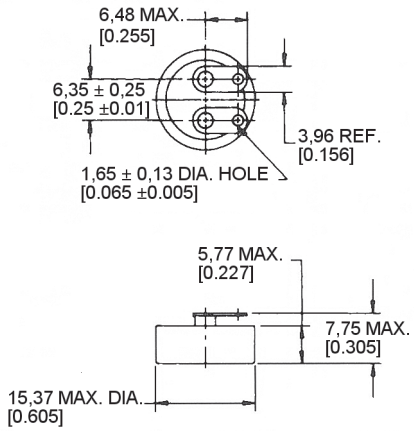


**SERIES NAME**
3150 Low Silhouette Hermetic Thermostat
3150U Low Silhouette Hermetic Thermostat
3150UX Low Silhouette Hermetic Thermostat
3156 Low Silhouette Hermetic Thermostat
3156U Low Silhouette Hermetic Thermostat

# 3600/3601 Series TO-5 Thermal Switches

The 3600/3601 Series is a single pole, single throw, bimetal snap-action switch available to open or close on temperature rise. These devices are specifically designed and often suited for mounting on products such as printed circuit boards to protect against hazardous temperatures associated with the thermal density of components on backplanes, flexible circuitry and sophisticated time-based circuits.

**Amperage:** 1 A resistive
**Housing material:** nickel
**Operating temperature range:** 40 °C to 120 °C [104 °F to 248 °F]
**Environmental exposure range:** -50 °C to 150 °C [-58 °F to 302 °F]
**Dielectric strength:** 500 Vac 60 Hz for one second, terminal to case
**Insulation resistance:** 20 MOhm at 500 Vdc
**Contact resistance:** 60 MOhm
**Hermetic seal:** $1x10^{-3}$ atm cc/s

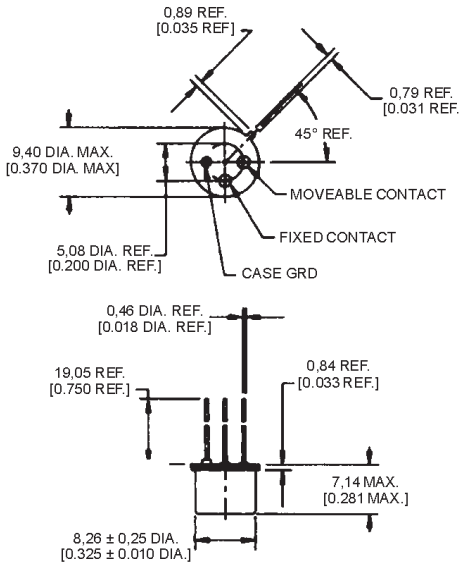


**SERIES NAME**
3600 Series TO-5 Thermal Switch
3601 Series TO-5 Thermal Switch

# 3000 Series Custom-packaged Thermostats

The 3000 Series incorporates a Honeywell thermostat assembled in a custom package for use in a variety of applications that require flexibility in mounting and terminal configurations. A typical product includes a 3100 hermetic internal thermostat with a terminal selection, housing selection and customized part number. These custom package devices operate in many extreme environmental conditions, such as exposure to hazardous substances, dust particles and liquid immersion.

| | |
|---|---|
| **Amperage:** | 7 A resistive |
| **Housing material:** | Stainless steel or brass |
| **Operating temperature range:** | -29 °C to 260 °C [-20 °F to 500 °F] |
| **Environmental exposure range:** | -62 °C to 288 °C [-80 °F to 550 °F] |
| **Dielectric strength:** | MIL-STD-202, Method 301<br>1250 Vac 60 Hz terminal to case |
| **Insulation resistance:** | MIL-STD-202, Method 302<br>50 MOhm to 500 MOhm |
| **Contact resistance:** | MIL-STD-202, Method 307<br>50 mOhm max. |
| **Hermetic seal:** | MIL-STD-202, Method 112, Condition A<br>1 x $10^{-5}$ atm cc/s |
| **Moisture resistance:** | MIL-STD-202 Method 106 |

## *Terminations for 3000-45X* and 3000-55X* Housings*

**0**

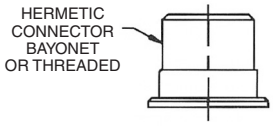


**1**

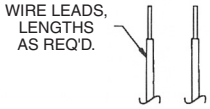


**2a**

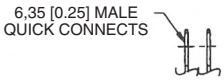


**3**

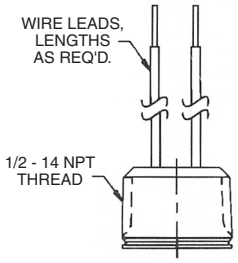


**2b**

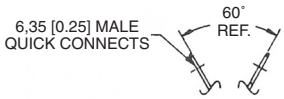


**4a**

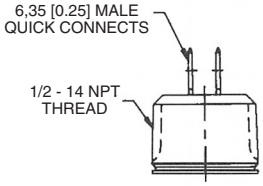


### *Housings*

**3000-45X***

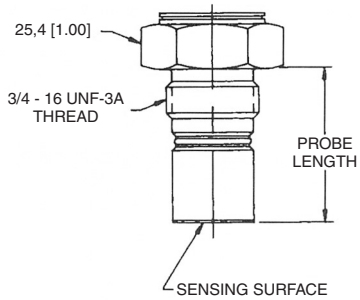


**4b**

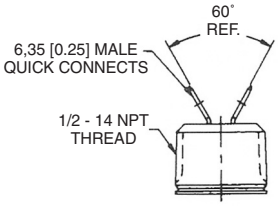


**3000-55X***

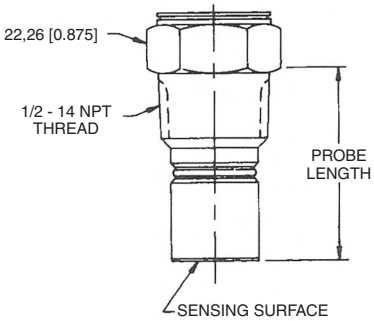


## *Terminations for 3000-53X* and 3000-141 Housings*

**1**

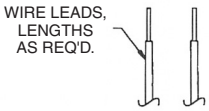


**2a**

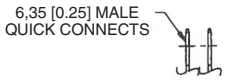


**2b**

### *Housings*

**3000-53X***

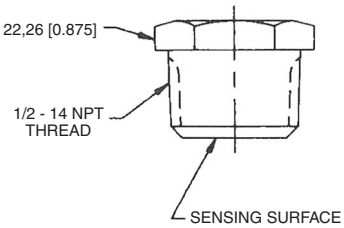


**3000-141**

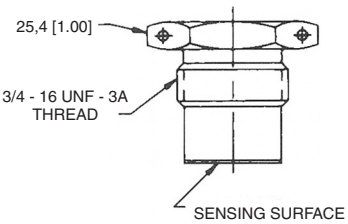


**SERIES NAME**
3000 Custom-packaged Thermostat

## 3800 Series Industrial-grade Thermostats for Severe Duty Applications

The 3800 Series is often used where high levels of vibration and mechanical shock are common but a military device is not required. It is easily customized for use in a variety of applications.

| | |
|---|---|
| **Amperage:** | 7 A resistive |
| **Housing material:** | Steel housing with glass-to-metal seal at terminal junction |
| **Operating temperature range:** | -29 °C to 260 °C [-20 °F to 500 °F] |
| **Environmental exposure range:** | -62 °C to 260 °C [-80 °F to 500 °F] |
| **Dielectric strength:** | MIL-STD-202, Method 301<br>1250 Vac terminal to case |
| **Insulation resistance:** | MIL-STD-202, Method 302, Cond. B<br>50 MOhm min. terminal to case |
| **Contact resistance:** | MIL-STD-202, Method 307<br>50 mOhm max. |
| **Hermetic seal:** | MIL-STD-202, Method 112, Cond. A<br>1 x $10^{-5}$ atm cc/s |
| **Moisture resistance:** | MIL-STD-202, Method 106 |
| **Vibration (random):** | MIL-STD-202, Method 214<br>30 g, 20 Hz to 2,000 Hz |
| **Vibration (sinusoidal):** | MIL-STD-202, Method 204,<br>Condition D 20 G, 20 Hz to 2,000 Hz |
| **Mechanical shock:** | MIL-STD-202, Method 213, 400 G |
| **Thermal shock:** | MIL-STD-202, Method 107, Cond. B |
| **Acceleration:** | MIL-STD-202, Method 212, 20 G |

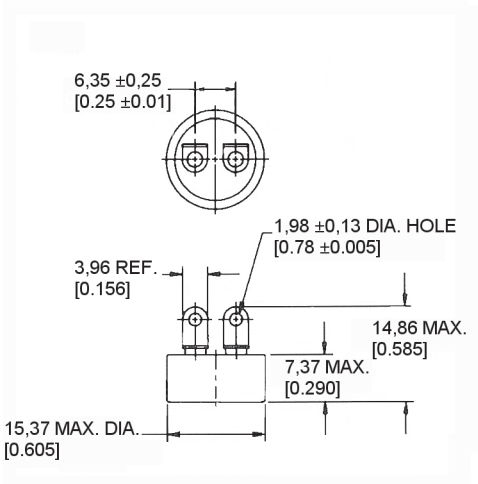


**SERIES NAME**
3800 Industrial Grade Thermostat

## 3450R/3450HR/3455R Series Phenolic Automatic Reset Thermostats

A temperature-sensitive bimetal disc, electrically isolated from the switch, actuates the normally closed contacts. The contacts open when the surface or ambient temperatures increase to the operating snap point of the calibrated disc. Response to temperature changes is extremely rapid due to the inherently low mass of the disc and the small size of the product. These products are factory calibrated to the customer's specification.

| | |
|---|---|
| **Reset type:** | Automatic |
| **Amperage capacity:** | 15 A resistive max. |
| **Housing material:** | Phenolic |
| **Operating temperature range:** | 0 °C to 150 °C [32 °F to 302 °F] |
| **Environmental exposure range:** | 0 °C to 150 °C [32 °F to 302 °F] |

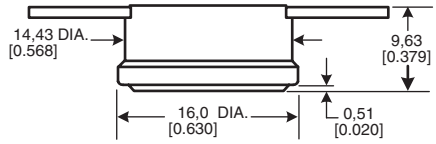


**SERIES NAME**
3450R Phenolic Automatic Reset Thermostat

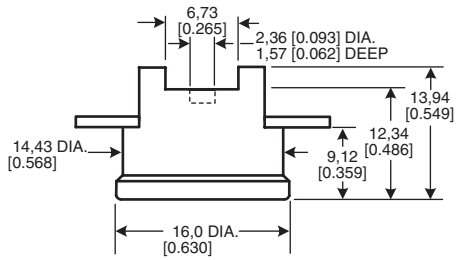


**SERIES NAME**
3450HR Phenolic Automatic Reset Thermostat

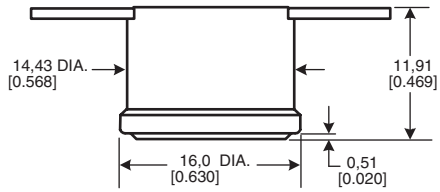


**SERIES NAME**
3455R Phenolic Automatic Reset Thermostat

## 3450RC/3450RCH/3455RC Series Ceramic Automatic Reset Thermostats

A temperature-sensitive bimetal disc, electrically isolated from the switch, actuates the normally closed contacts. The contacts open when the surface or ambient temperatures increase to the operating snap point of the calibrated disc. Response to temperature changes is extremely rapid due to the inherently low mass of the disc and the small size of the product.

| | |
|---|---|
| **Reset type:** | Automatic |
| **Amperage capacity:** | 15 A resistive max. |
| **Housing material:** | Ceramic |
| **Operating temperature range:** | 0 °C to 260 °C [32 °F to 500 °F] |
| **Environmental exposure range:** | -20 °C to 287 °C [0 °F to 550 °F] |

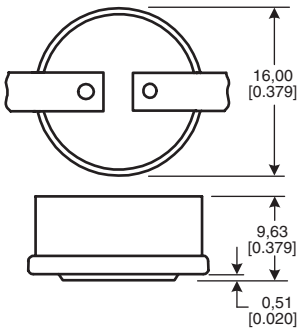


**SERIES NAME**
3450RC Ceramic Automatic Reset Thermostat

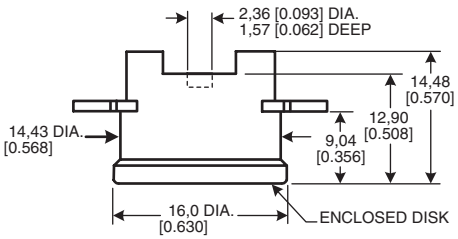


**SERIES NAME**
3450RCH Ceramic Automatic Reset Thermostat

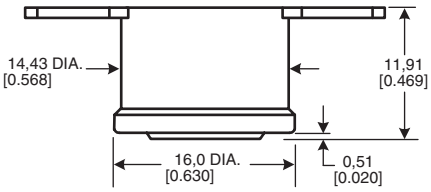


**SERIES NAME**
3455RC Ceramic Automatic Reset Thermostat

## 3450CM/3455RM Series Ceramic and Phenolic Manual Reset Thermostats

A temperature-sensitive bimetal disc, electrically isolated from the switch, actuates the normally closed contacts. The contacts open when the surface or ambient temperatures increase to the operating snap point of the calibrated disc. The circuit will stay open above room ambient temperature until the manual reset button is pressed. Response to temperature changes is extremely rapid due to the inherently low mass of the disc and the small size of the product.

| | |
|---|---|
| **Reset type:** | Manual |
| **Amperage capacity:** | 15 A resistive max. |
| **Housing material:** | Ceramic or phenolic |
| **Operating temperature range:** | 52 °C to 232 °C [125 °F to 450 °F] (ceramic)<br>52 °C to 150 °C [125 °F to 302 °F] (phenolic) |
| **Environmental exposure range:** | 10 °C to 260 °C [50 °F to 500 °F] (ceramic)<br>10 °C to 150 °C [50 °F to 302 °F] (phenolic) |

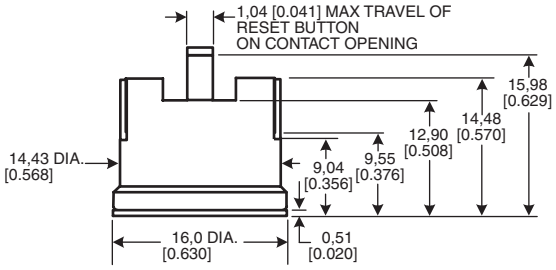


**SERIES NAME**
3450CM Ceramic Manual Reset Thermostat

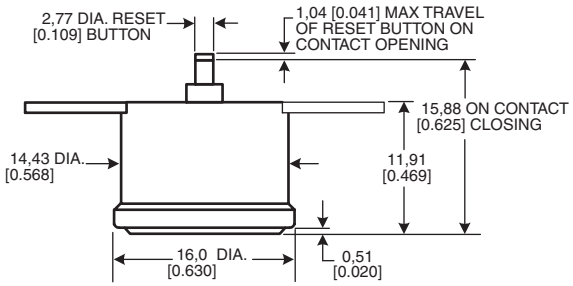


**SERIES NAME**
3455RM Phenolic Manual Reset Thermostat

## 3455RBV Series Overmolded Automatic Reset Thermostats

A temperature-sensitive bimetal disc, electrically isolated from the switch, actuates the normally closed contacts. The contacts open when the surface or ambient temperatures increase to the operating snap point of the calibrated disc. Response to temperature changes is extremely rapid due to the inherently low mass of the disc and the small size of the product.

**Reset type:** Automatic
**Amperage capacity:** 15 A resistive max.
**Housing material:** Ceramic or phenolic, epoxy overmold
**Operating temperature range:** -12 °C to 105 °C [10 °F to 221 °F]
**Environmental exposure range:** -18 °C to 121 °C [0 °F to 250 °F]

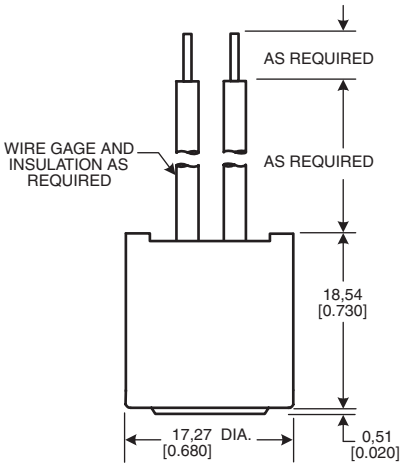


**SERIES NAME**
3455RBV Overmolded Automatic Reset Thermostat

## 3450R/3450RC/3450RCH/3455R/3455RC Series "One-shot" ½ in Thermostats

Products are designed for high limit applications where automatic reset is not desired.

**Reset type:** None
**Amperage capacity:** 15 A resistive max.
**Housing material:** Ceramic or phenolic, with or without epoxy-sealed cap and terminals
**Operating temperature range:** 52 °C to 260 °C [125 °F to 500 °F] (ceramic)
52 °C to 150 °C [125 °F to 302 °F] (phenolic)
**Environmental exposure range:** -18 °C to 287 °C [0 °F to 550 °F] (ceramic)
-18 °C to 150 °C [0 °F to 302 °F] (phenolic)

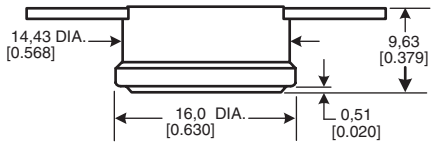


**SERIES NAME**
3450R Phenolic "One-shot" ½ in Thermostat

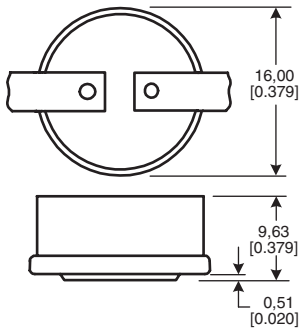


**SERIES NAME**
3450RC Ceramic "One-shot" ½ in Thermostat

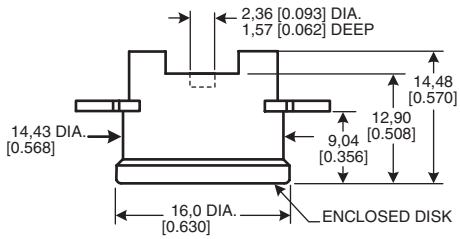


**SERIES NAME**
3450RCH Ceramic "One-shot" ½ in Thermostat

# 3450R/3450RC/3450RCH/3455R/3455RC Series "One-shot" ½ in Thermostats (continued)

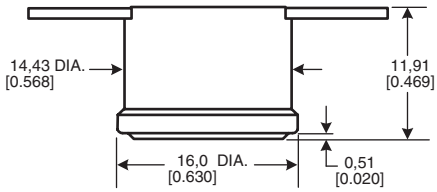


**SERIES NAME**
3455R Phenolic "One-shot" ½ in Thermostat

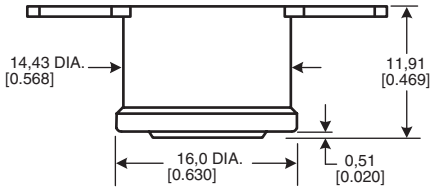


**SERIES NAME**
3455RC Ceramic "One-shot" ½ in Thermostat

# Standard Terminal Guide: Hermetic Thermostats Only

## 3100/3106 Series

### T-116

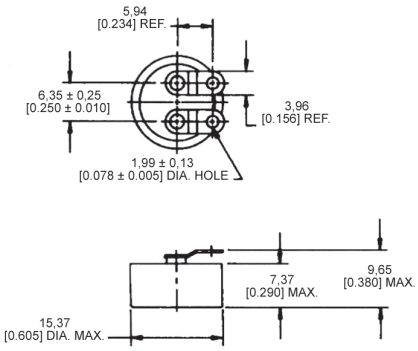


### T-117

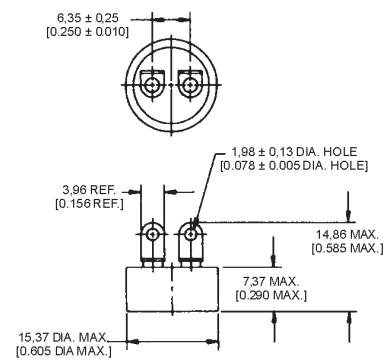


### T-120

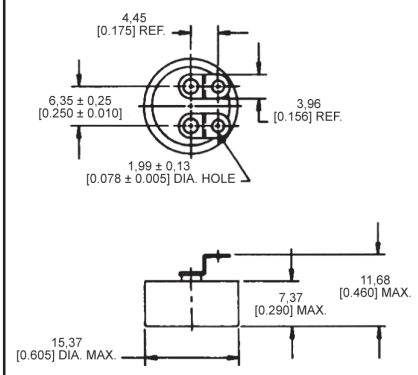


## 3150/3156 Series

### T-109

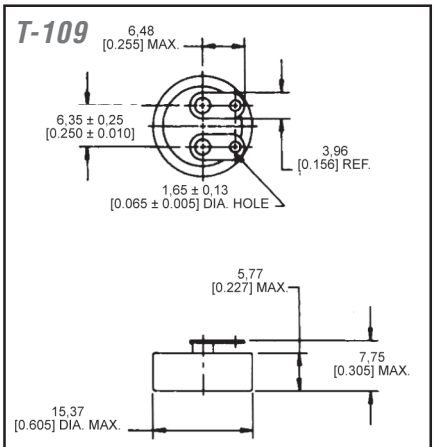


### T-110

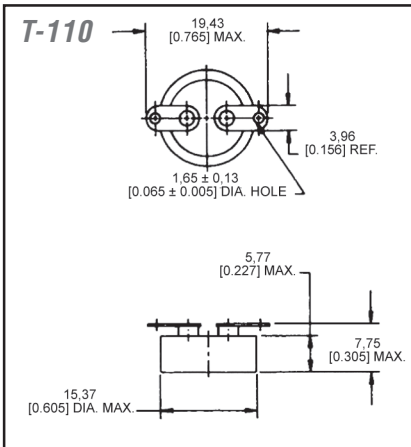


### T-111

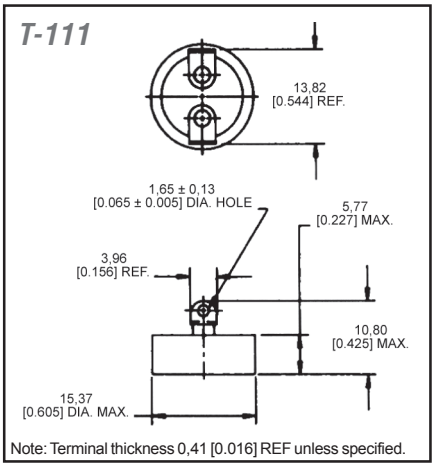


Note: Terminal thickness 0,41 [0.016] REF unless specified.

## 3305/3306 Series

### T-133

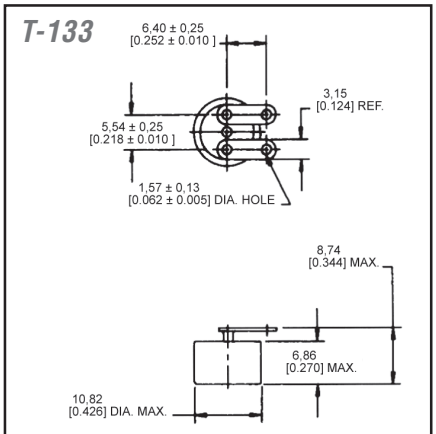


Note: Terminal thickness 0,25 [0.010] REF unless specified.

### T-134

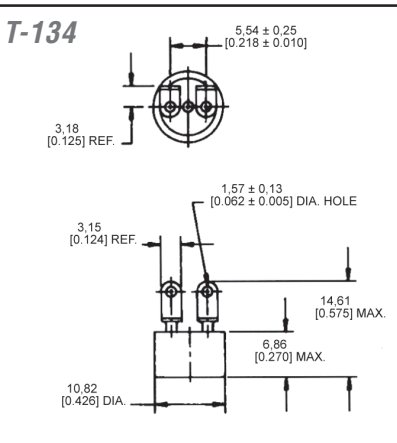


### T-135

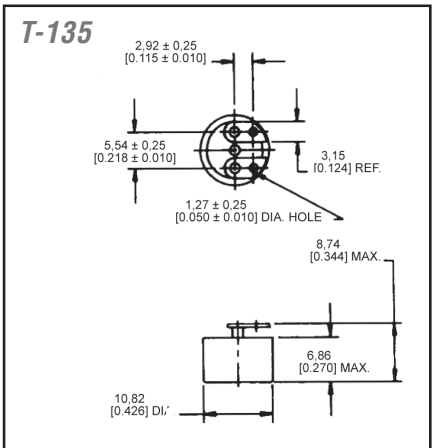

## Standard Terminal Guide: Hermetic Thermostats Only (continued)

*Hermetic Radius Cap (Except 3305/3306 Series)*

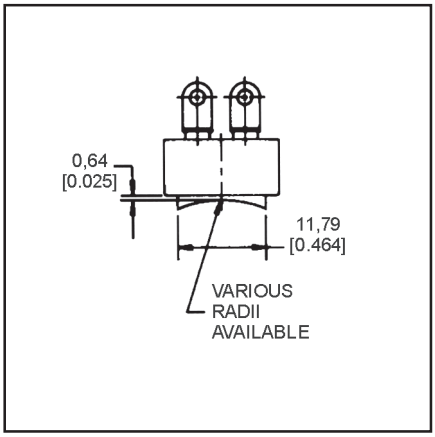


*Terminal/Radius Cap Orientation Parallel Terminals*

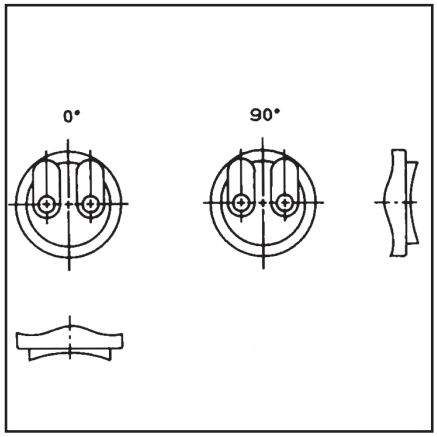


*Terminal/Radius Cap Orientation Opposed Terminals*

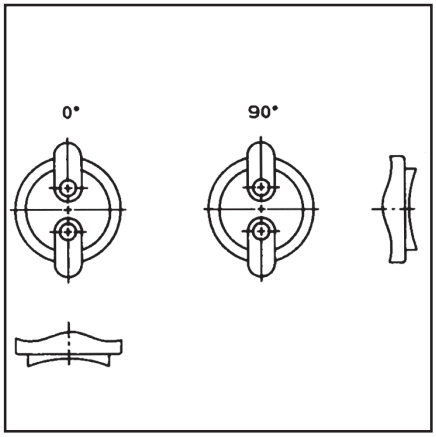


## Standard Mounting Bracket Guide: Hermetic Thermostats Only

*3100/3106/3150/3156/3305/3306 Series*

*B-208*

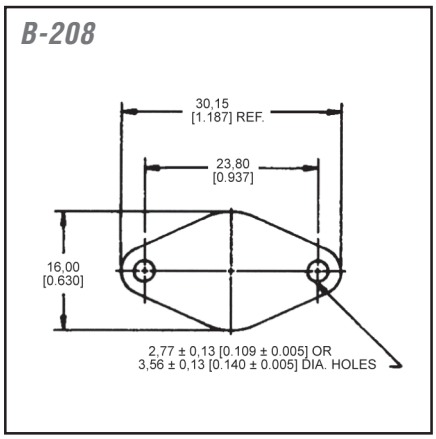


*B-209*

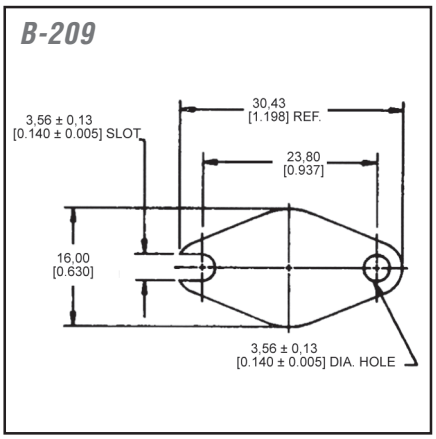


*B-210*

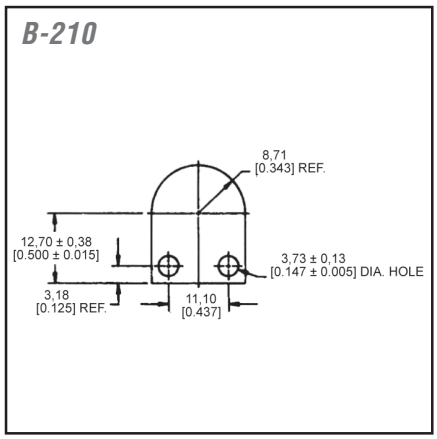


*Top Mounted (Excluding 3150/ 3156/3305 Series)*

*B-212*

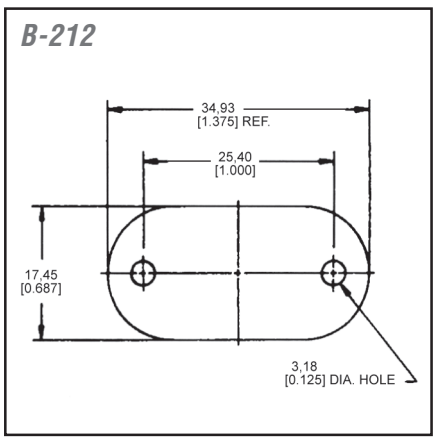


*B-213*

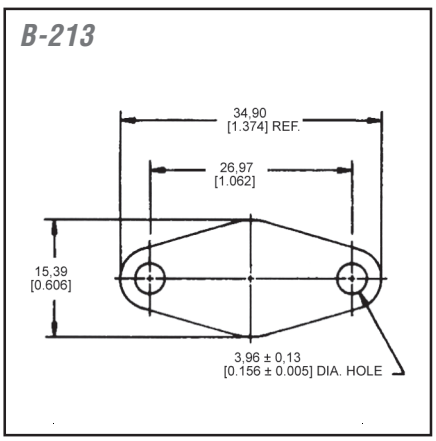


*B-214*

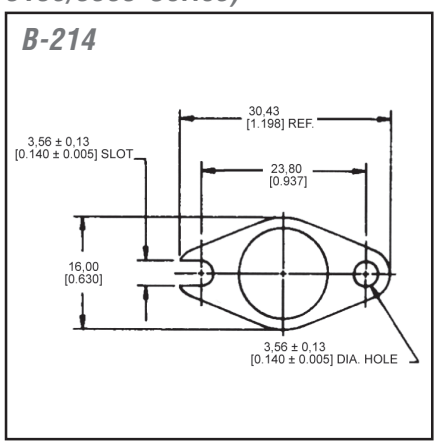

# Standard Mounting Bracket Guide: Hermetic Thermostats Only (continued)

### Top or Bottom Mounted

**B-215**

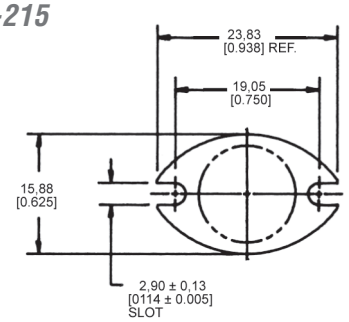


Notes: 1. Top mounted (excluding Series 3150/3156/3305).
2. Bracket thickness 0,51 ±0,10 [0.020 ±0.004] unless specified.
3. Decimal tolerance ±0,25 [±0.010] unless specified.

### 3305 Series Only

**B-216**

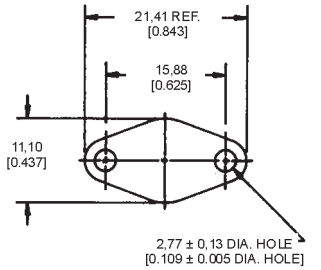


Note: Bracket thickness 0,51 ±0,10 [0.015 ±0.004] unless specified.

### Top Mounted (Excluding 3150/ 3156/3305 Series)

**B-245**

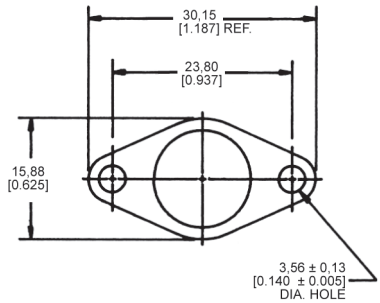


### Hermetic Studs/Hex. Studs (Excluding Series 3305/3306) Studs

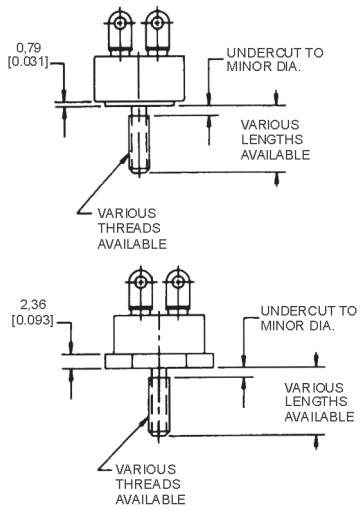


### 3305/3306 Studs

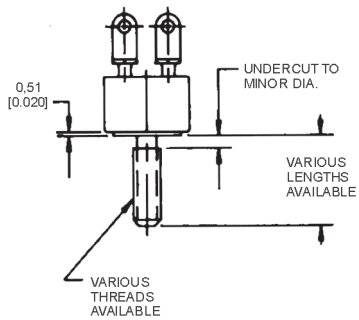


Note: Decimal tolerance ±0,25 [±0.010] unless specified.

# Standard Mounting Bracket Guide: Hermetic Thermostats Only (continued)

## *Hermetic Overmolds (Silicone or Epoxy)*

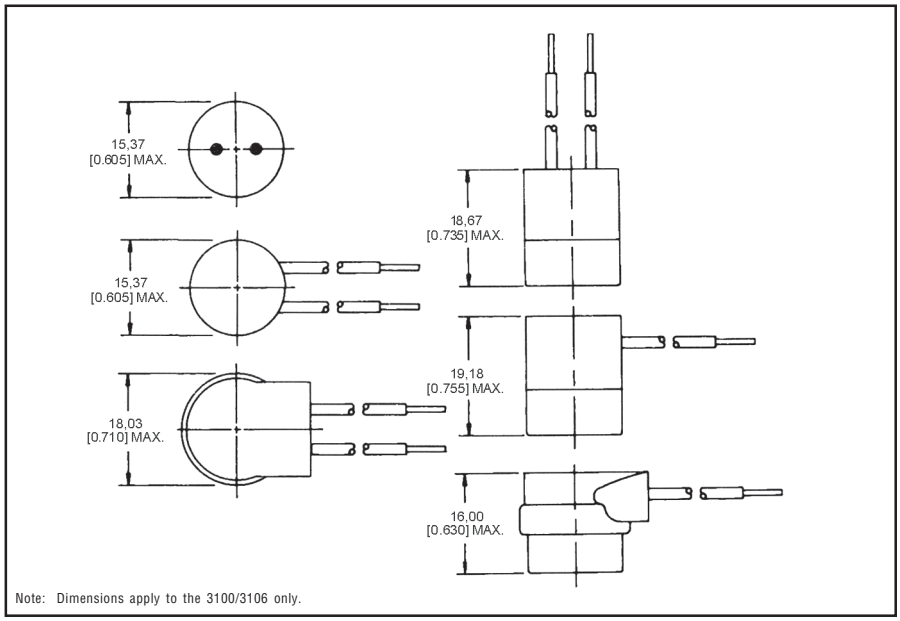


## *Terminal/Bracket Orientations*

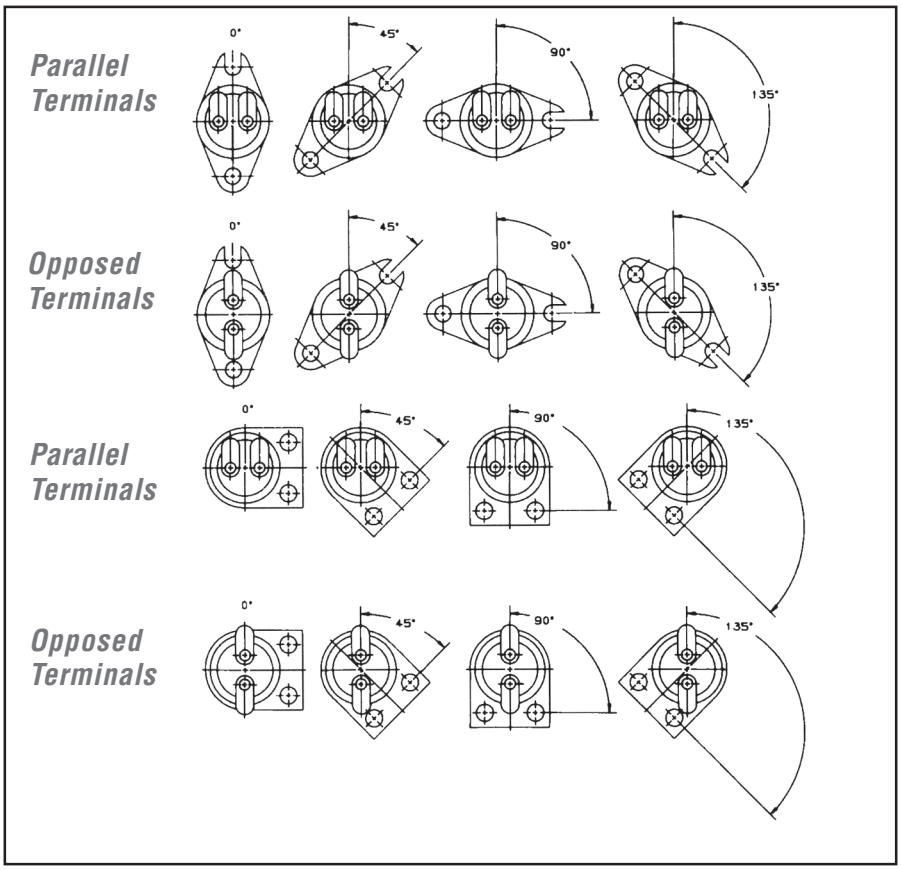

# Standard Terminal Guide: Non-Hermetic Thermostats Only

## 3001 Series

### T-123

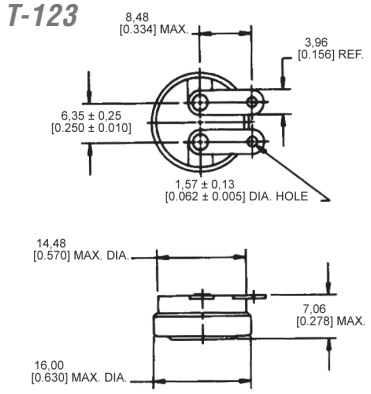


### T-124

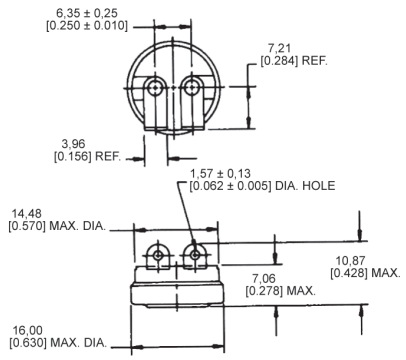


### T-125

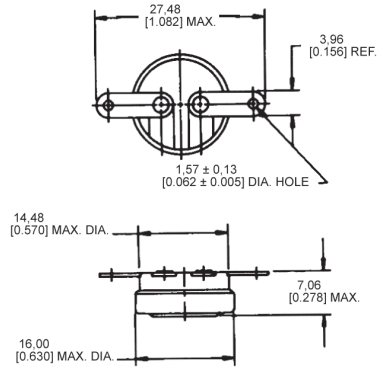


### T-126

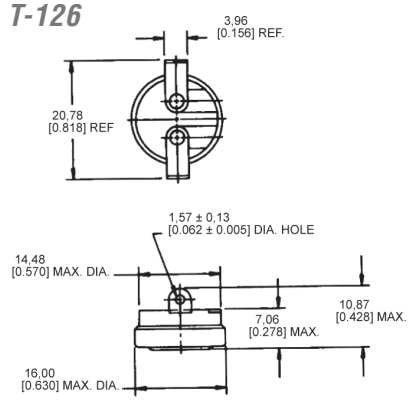


### T-127

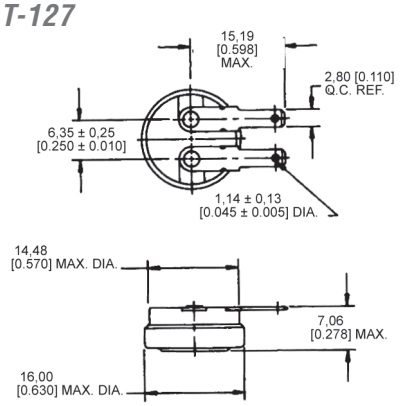


### T-128

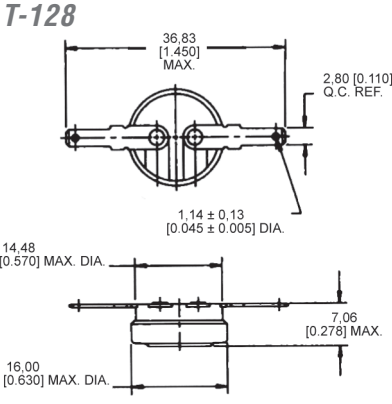


### T-177

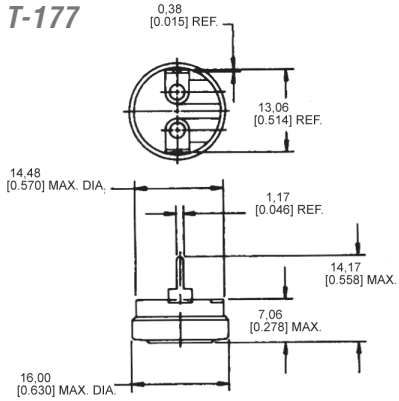


Note: Terminal thickness 0,51 [0.020] REF unless specified.

# Standard Terminal Guide: Non-Hermetic Thermostats Only (continued)

## 3004 Series

### T-123

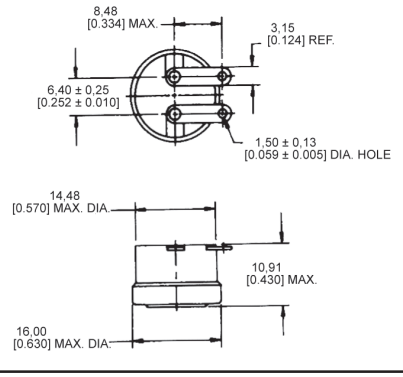


### T-124

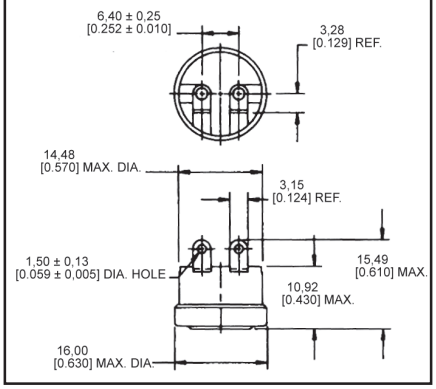


### T-125

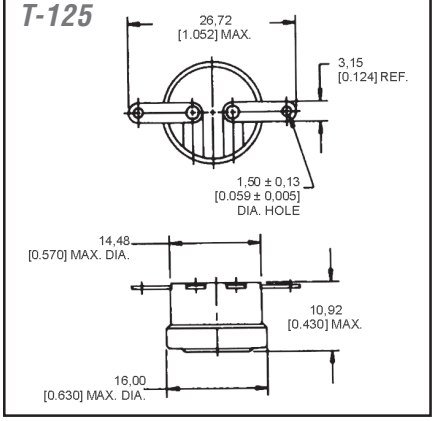


### T-126

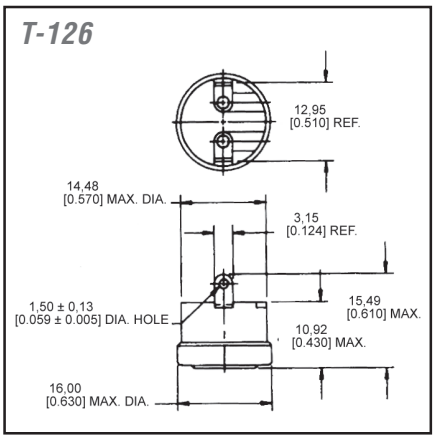


### T-127

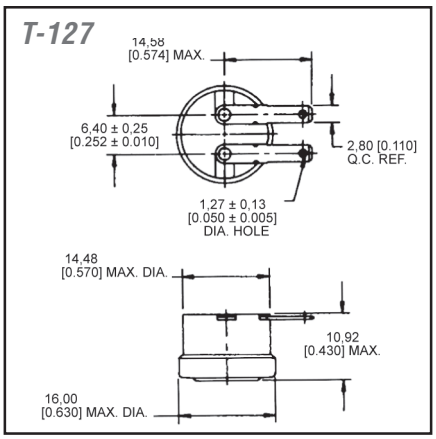


### T-128

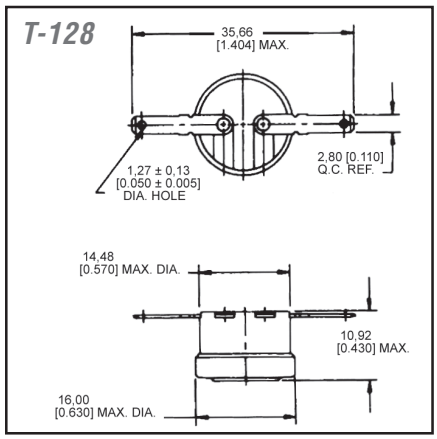


### T-177

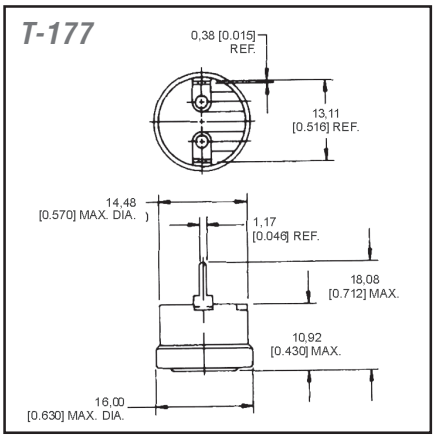


Note: Terminal thickness 0,51 [0.020] REF unless specified.

# Standard Mounting Bracket Guide: Non-Hermetic Thermostats Only

## Series 3450/3450CM/3450RC/3455R/3455RC/3455RM/3455RBV

### 3450, 3450RC

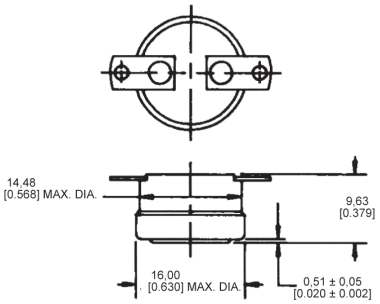


### 3450CM

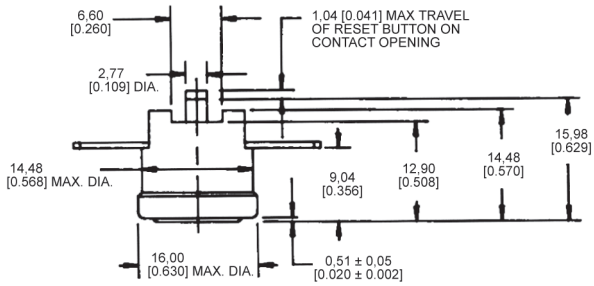


### 3455R, 3455RC

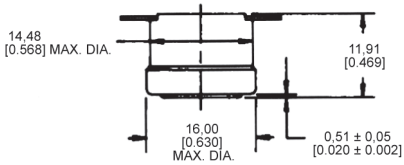


### 3455RM

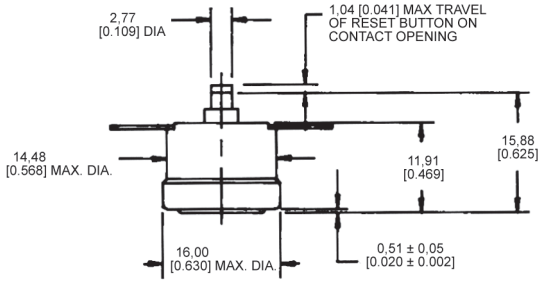


### 3455RBV

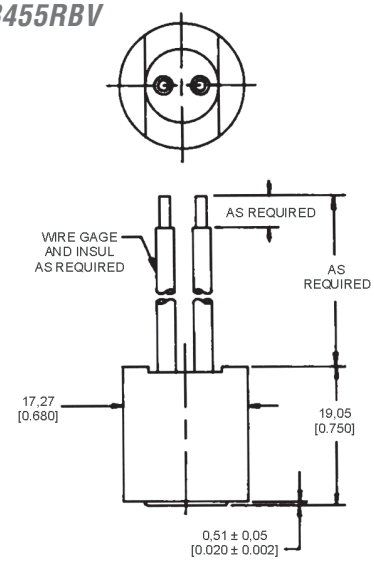

# Standard Mounting Bracket Guide: Non-Hermetic Thermostats Only (continued)

## *Series 3450/3455R/3455RBV/3450C/3455RC/3455RM/3450CM*

### *T-101*

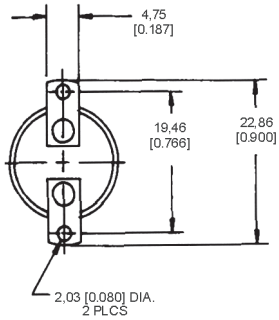


### *T-106*

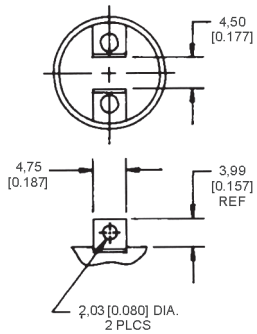


### *T-107*

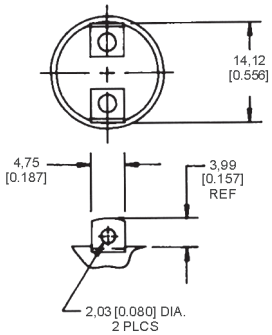


### *T-140*

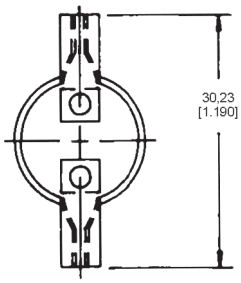


### *T-141*

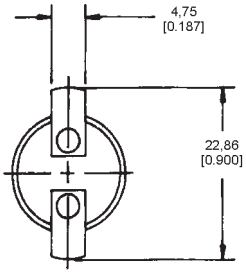


### *T-146*

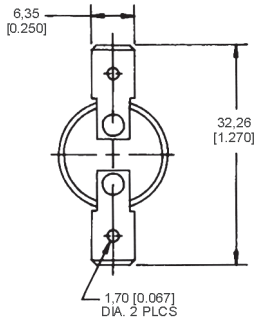


### *T-147*

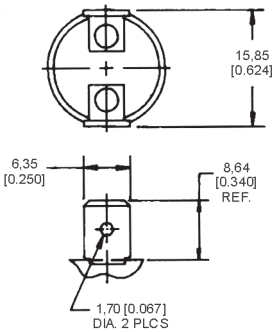


### *T-148*

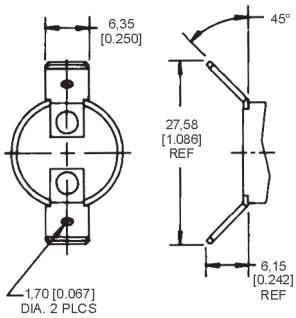


### *T-149*

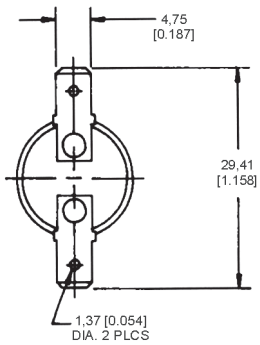

## Standard Mounting Bracket Guide: Non-Hermetic Thermostats Only (continued)

### *Standard Terminals - Series 3450/3455R/3455RBV/3450C/3455RC/3455RM/3450CM*

*T-150*

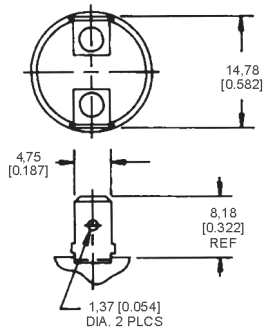


*T-151*

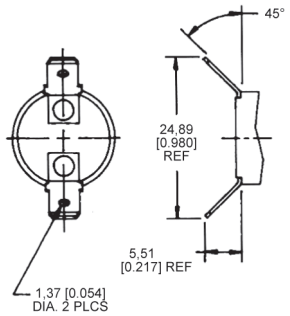


*T-161*

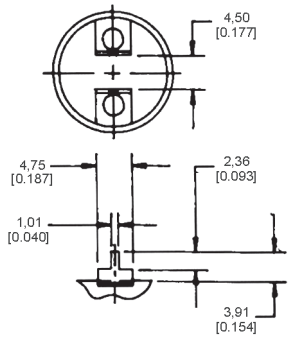


*T-168*

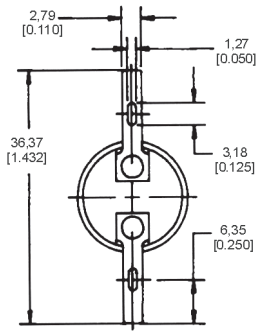


*T-169*

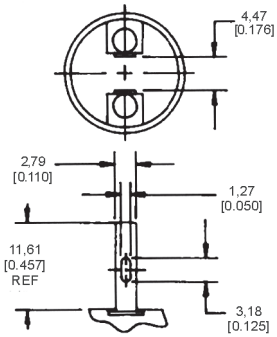


*T-188*

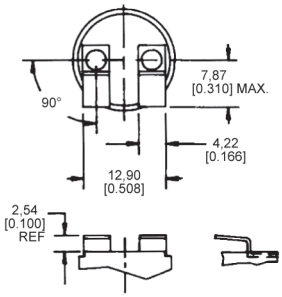

# Standard Mounting Bracket Guide: Non-Hermetic Thermostats Only (continued)

## Standard Mounting Brackets and Studs - Series 3001/3004 Only

### B-201

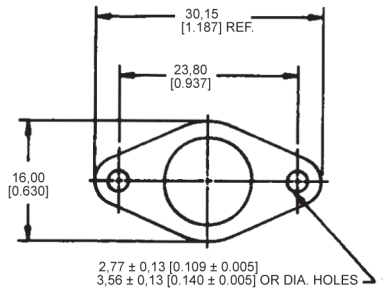


### B-206

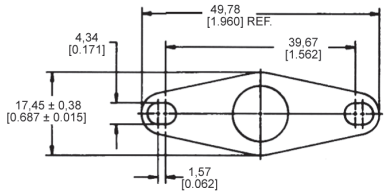


### B-209

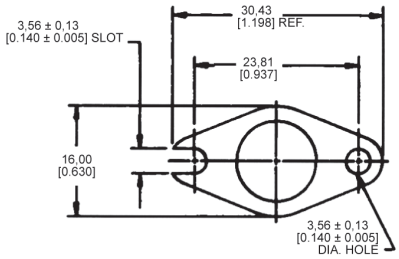


### B-210

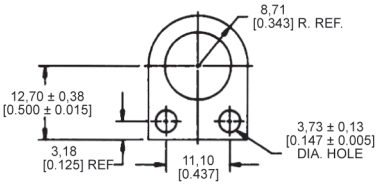


### B-212*

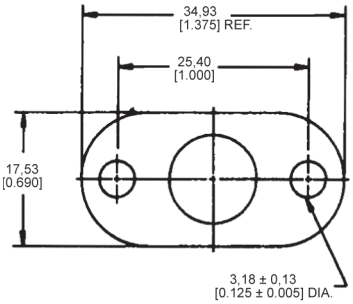


Note: Bracket thickness 0,38 ±0,10 [0.015 ±0.004] unless specified.

### B-213

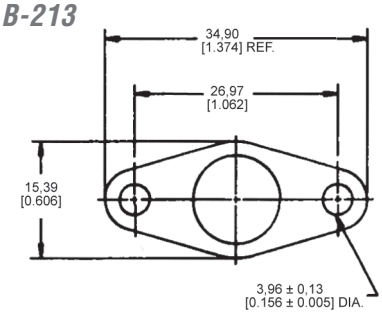


Notes: 1. Bracket thickness 0,51 ±0,10 [0.020 ±0.004] unless specified.
2. Decimal tolerance ±0,25 [0.010] unless specified.

## Non-Hermetic Studs/Hex. Studs

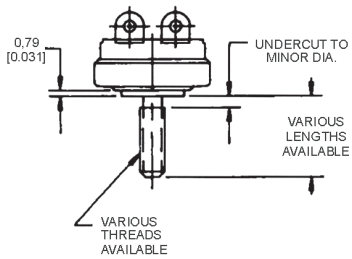


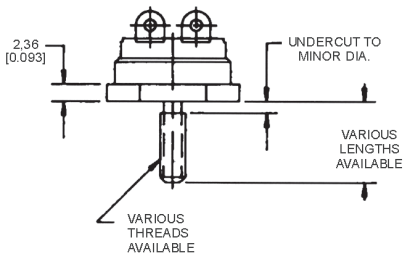


Note: Bracket thickness ±0,25 [0.010] unless specified.

## Non-Hermetic Radius Caps

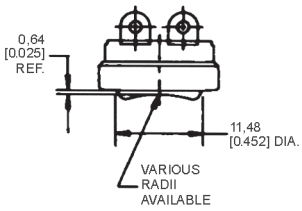


Note: Bracket thickness ±0,25 [0.010] unless specified.

# Standard Mounting Bracket Guide: Non-Hermetic Thermostats Only (continued)

*Series 3450/3455R/3455RBV/3450C/3455RC/3455RM/3450CM*

## B-201

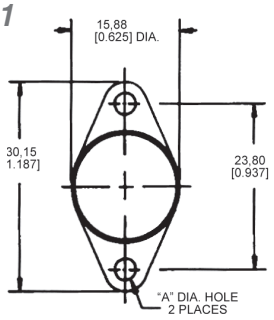


B-201 2,77 [0.109] DIA.
B-201A 3,68 [0.145] DIA.
B-201B 3,18 [0.125] DIA.

## B-203

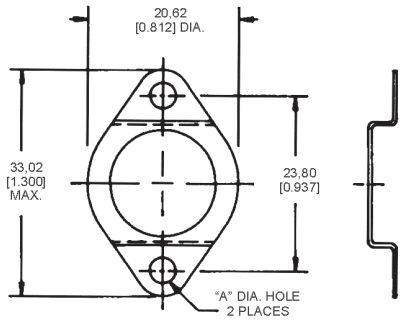


B-203 2,77 [0.109] DIA.
B-203A 3,68 [0.145] DIA.
B-203B 3,18 [0.125] DIA.

## B-205

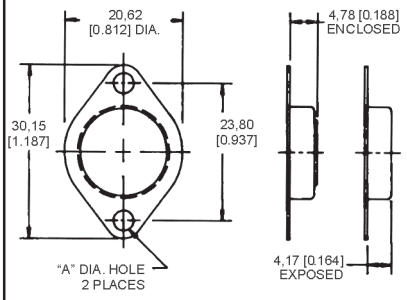


B-205 2,77 [0.109] DIA.
B-205 3,68 [0.145] DIA.

## B-203S

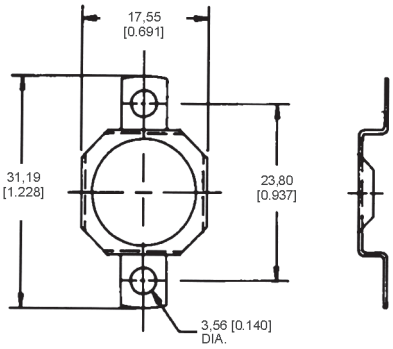


## B-206

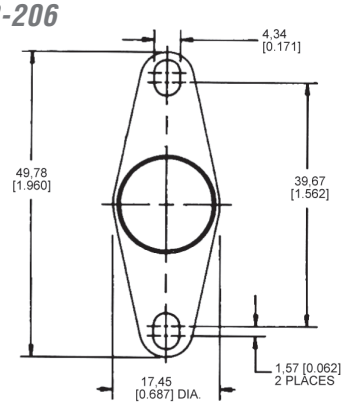


## B-207

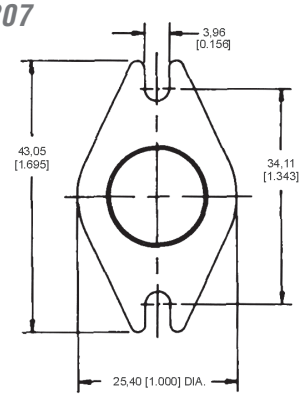


## B-209

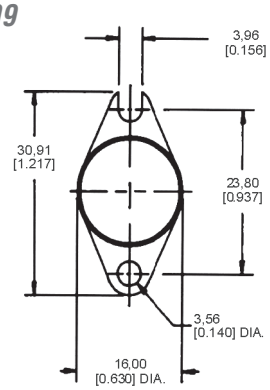


## B-210

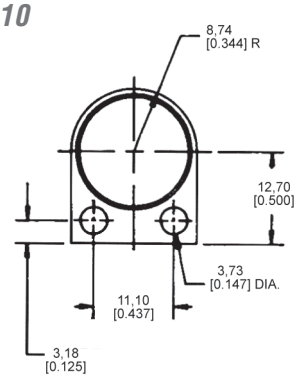


## B-212

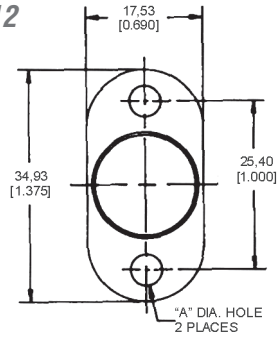


B-212 3,18 [0.125] DIA.
B-212A 4,75 [0.187] DIA.

## B-213

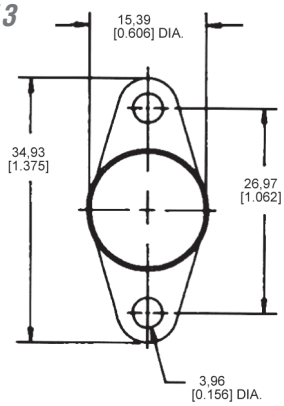

## Standard Mounting Bracket Guide: Non-Hermetic Thermostats Only (continued)

### B-230

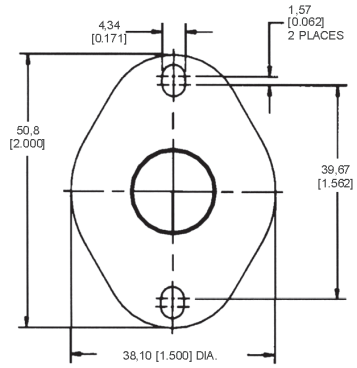


### B-239

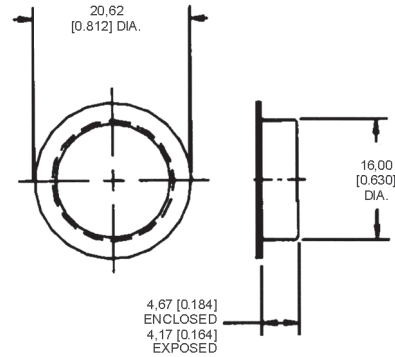


### B-241

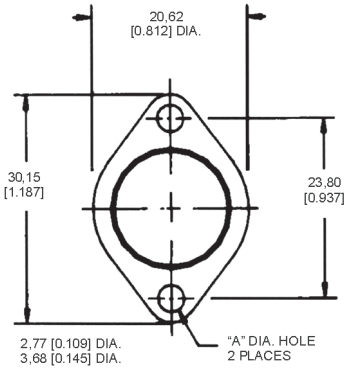


### B-246

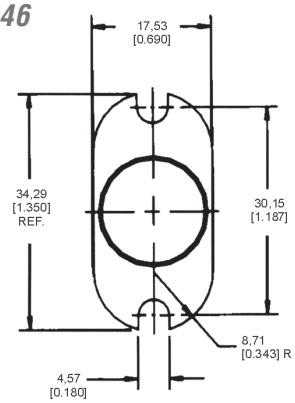


### B-249

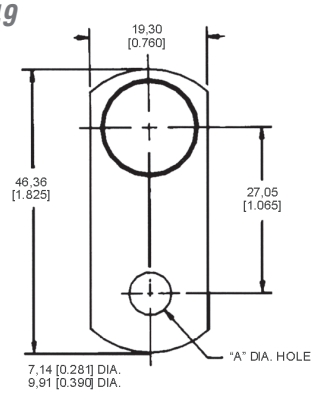


### B-250

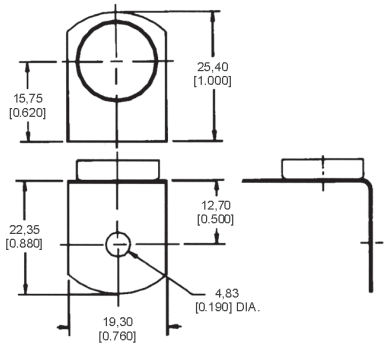


### B-220/B227 Brass Hex Mounting Stud

| | |
|---|---|
| B-220 | #6-32 |
| B-221 | #8-32 |
| B-222 | #10-24 |
| B-223 | #10-32 |
| B-224 | M3 X 0.5 |
| B-225 | M4 X 0.7 |
| B-226 | M5 X 0.8 |
| B-227 | M6 X 1.0 |

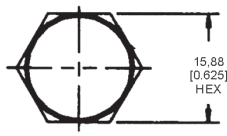


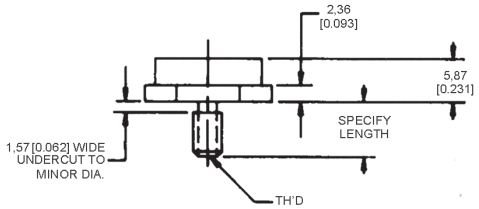


### B-240 Brass Mounting Stud

#6-32
#8-32
#10-32
M3 X 0.5
M4 X 0.7
M5 X 0.8

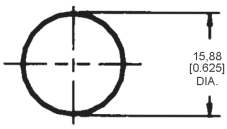


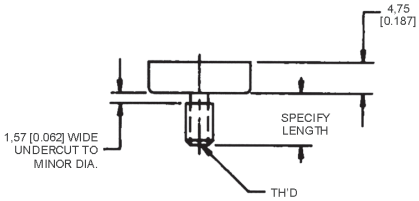

# High Amperage Custom Package Thermostats: Non-Hermetic Internal Thermostats Only

### 3000-59

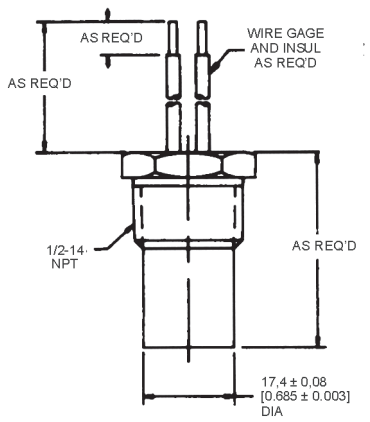


### 3000-105

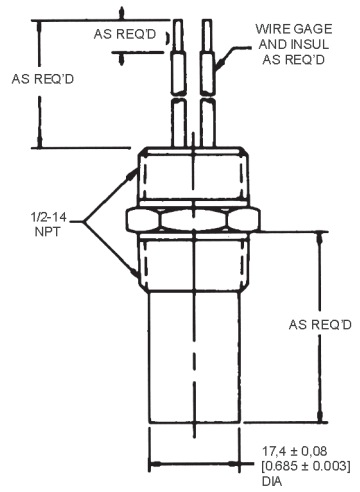


### 3000-53

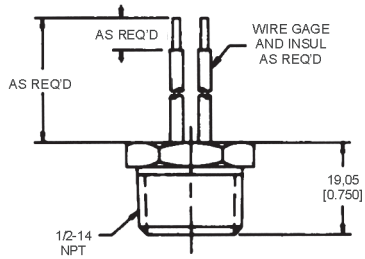


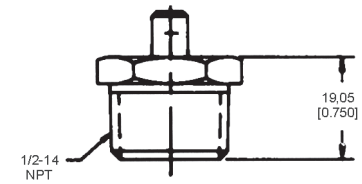


These custom designed Series 3000 packages include a non-hermetic non-adjustable, snap action 3450RC/3455RC thermostat. Performance characteristics are outlined elsewhere in this catalog. Housing material varies with customer requirements. Brass, stainless steel, and other materials are available. Customized wire, terminals and size may be designed to suit requirements.

### *Terminal/Bracket Orientations (Intermediate angles available on special request.)*

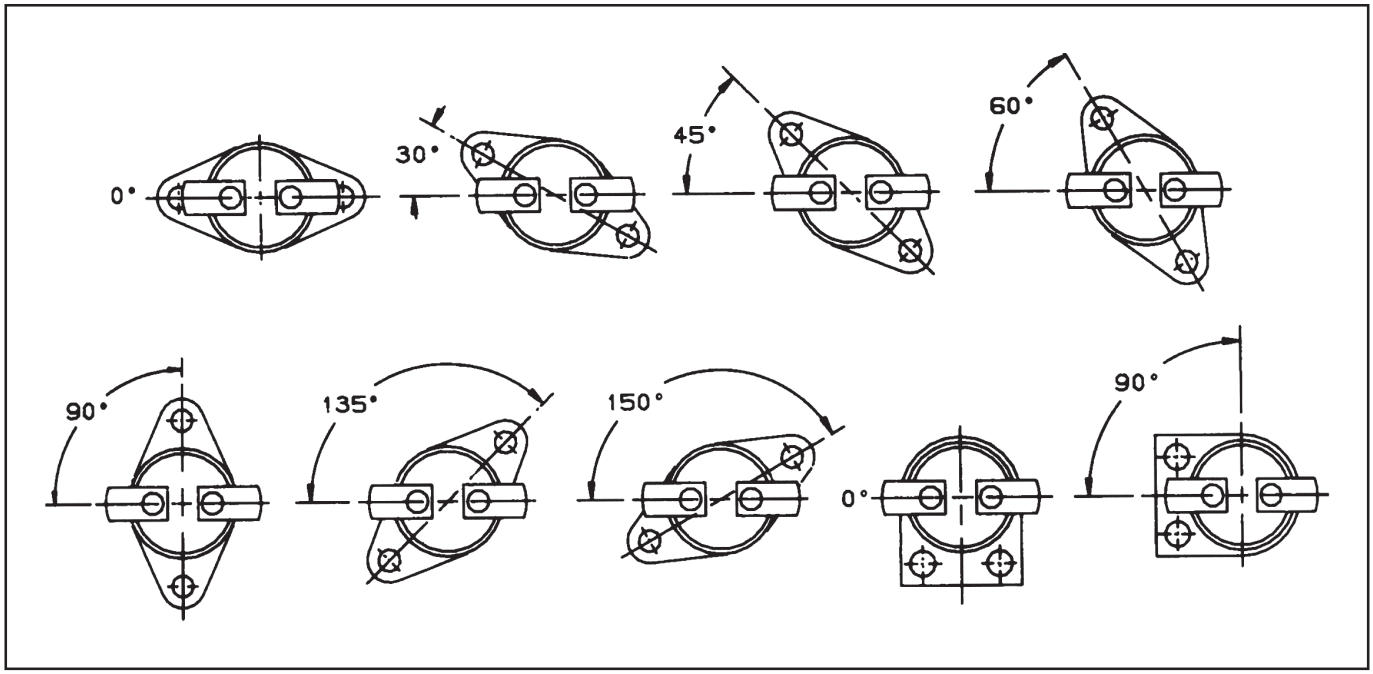

High Reliability thermostats are manufactured to meet the stringent requirements of the military and aerospace industries for dielectric strength, moisture resistance, vibration, shock and hermetic seal. They meet all domestic and international approvals, as well as appropriate military specifications (i.e., MIL-S-24236).

NOTE: The products in this section do not follow the "how to use this catalogue" instructions provided in the catalogue introduction. Specific reference numbers are not given due to their custom nature. Please contact your local Honeywell sales office for ordering information.

## 3200 Series Aerospace

The 3200 Series is a single pole, single throw switch activated by a snap-action bimetal disc. Temperature calibrations are pre-set at the factory and each unit is 100 % thermally and mechanically inspected. It is available to open or close on temperature rise. The case is laser welded to form a hermetically sealed steel housing, with a glass-to-metal seal at the terminal junction. It is manufactured and tested to meet or exceed critical military and aerospace specifications for spaceflight use, including temperature stability, shock, vibration and cleanliness.

| | |
|---|---|
| **Amperage:** | 5 A resistive |
| **Housing material:** | Steel housing with glass-to-metal seal at terminal junction |
| **Operating temperature range:** | -51 °C to 163 °C [-60 °F to 325 °F] |
| **Environmental exposure range:** | -65 °C to 177 °C [-85 °F to 350 °F] |
| **Dielectric strength:** | MIL-STD-202, Method 301, 1250 Vac |
| **Insulation resistance:** | MIL-STD-202, Method 302, 500 MOhm |
| **Contact resistance:** | MIL-STD-202, Method 307, 0.025 Ohm max. |
| **Hermetic seal:** | MIL-STD-202, Method 112, Cond. C |
| **Moisture resistance:** | MIL-STD-202, Method 106 |
| **Shock:** | MIL-STD-202, Method 213, 750 G |
| **Vibration:** | MIL-STD-202, Method 204, 30 G<br>MIL-STD-202, Method 214, 50 G |
| **Acceleration:** | MIL-STD-202, Method 212, 20 G |
| **Thermal shock:** | MIL-STD-202, Method 107, Cond. B |
| **Salt (1) spray:** | MIL-STD-202, Method 101, Cond. B |

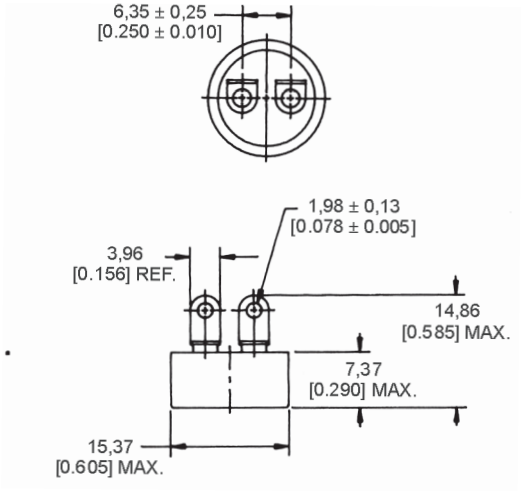


**SERIES NAME**
3200 Series Aerospace

## 3MS1 QPL Series Military

The 3MS1 Series is a single pole, single throw switch activated by a snap-action bimetal disc. Temperature calibrations are pre-set at the factory, and each unit is 100 % thermally and mechanically inspected. It is available to open or close on temperature rise. The case is laser welded to form a hermetically sealed steel housing with a glass-to-metal seal at the terminal junction. It is qualified to MIL-S-24236 and is QPL listed for military applications.

| | |
|---|---|
| **Amperage:** | 5 A resistive |
| **Housing Material:** | Steel housing with glass-to-metal seal at terminal junction |
| **Operating temperature range:** | -46 °C to 190 °C [-50 °F to 375 °F] |
| **Environmental exposure range:** | -65 °C to 260 °C [-85 °F to 500 °F] |
| **Dielectric strength:** | MIL-STD-202, Method 301, 1250 Vac |
| **Insulation resistance:** | MIL-STD-202, Method 302, 500 MOhm |
| **Contact resistance:** | MIL-STD-202, Method 307, 0.050 Ohm max. |
| **Hermetic seal:** | MIL-STD-202, Method 112 Cond. C |
| **Moisture resistance:** | MIL-STD-202, Method 106 |
| **Shock:** | MIL-STD-202, Method 213, 100 G |
| **Vibration:** | MIL-STD-202, Method 204, 20 G |
| **Acceleration:** | MIL-STD-202, Method 212, 20 G |
| **Thermal shock:** | MIL-STD-202, Method 107, Cond. B |
| **Salt (1) spray:** | MIL-STD-202, Method 101, Cond. B |

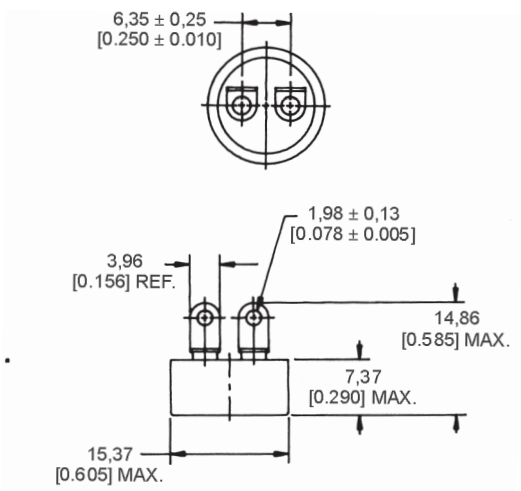


**SERIES NAME**
3MS1 QPL Series Military

## 3500 Series Military

The 3500 Series is a single pole, single throw switch activated by a snap-action bimetal disc. Temperature calibrations are pre-set at the factory, and each unit is 100 % thermally and mechanically inspected. It is available to open or close on temperature rise. The case is laser welded to form a hermetically sealed steel housing, with a glass-to-metal seal at the terminal junction. It meets or exceeds the requirements of MIL-S-24236 and is designed specifically for military and commercial aircraft applications. It is not QPL listed (see 3MS1).

| | |
|---|---|
| **Amperage:** | 5 A resistive |
| **Housing material:** | Steel housing with glass-to-metal seal at terminal junction |
| **Operating temperature range:** | -51 °C to 204 °C [-60 °F to 400 °F] |
| **Environmental exposure range:** | -65 °C to 260 °C [-85 °F to 500 °F] |
| **Dielectric strength:** | MIL-STD-202, Method 301, 1250 Vac |
| **Insulation resistance:** | MIL-STD-202, Method 302, 500 MOhm |
| **Contact resistance:** | MIL-STD-202, Method 307, 0.050 Ohm max. |
| **Hermetic seal:** | MIL-STD-202, Method 112, Cond. C |
| **Moisture resistance:** | MIL-STD-202, Method 106 |
| **Shock:** | MIL-STD-202, Method 213, 400 G |
| **Vibration:** | MIL-STD-202, Method 204, 20 G |
| **Acceleration:** | MIL-STD-202, Method 212, 20 G |
| **Thermal shock:** | MIL-STD-202, Method 107, Cond. B |
| **Salt (1) spray:** | MIL-STD-202, Method 101, Cond. B |

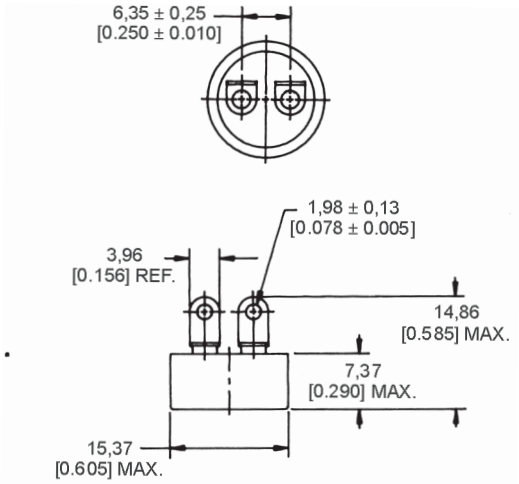


**SERIES NAME**
3500 Series Military

## 3153 Series Low Silhouette

The 3153 Series is a single pole, single throw switch activated by a snap-action bimetal disc. Temperature calibrations are pre-set at the factory, and each unit is 100 % thermally and mechanically inspected. It is available to open or close on temperature rise. The case is laser welded to form a hermetically sealed steel housing, with a glass-to-metal seal at the terminal junction. The low silhouette and compact design often make it especially well-suited for applications that require miniaturization. Acceptance testing is performed in accordance with MIL-S-24236, Table III.

| | |
|---|---|
| **Amperage:** | 6 A resistive |
| **Housing Material:** | Steel housing with glass-to-metal seal at terminal junction |
| **Operating temperature range:** | -29 °C to 177 °C [-20 °F to 350 °F] |
| **Environmental exposure range:** | -65 °C to 260 °C [-85 °F to 500 °F] |
| **Dielectric strength:** | MIL-STD-202, Method 301, 1250 Vac |
| **Insulation resistance:** | MIL-STD-202, Method 302, 500 MOhm |
| **Contact resistance:** | MIL-STD-202, Method 307, 0.050 Ohm max. |
| **Hermetic seal:** | MIL-STD-202, Method 112, Cond. C |
| **Moisture resistance:** | MIL-STD-202, Method 106 |
| **Shock:** | MIL-STD-202, Method 213, 100 G |
| **Vibration:** | MIL-STD-202, Method 204, 20 G |
| **Thermal shock:** | MIL-STD-202, Method 107, Cond. B |
| **Salt (1) spray:** | MIL-STD-202, Method 101, Cond. B |

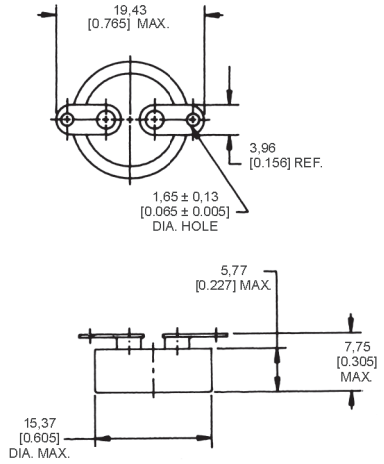


**SERIES NAME**
3153 Series Low Silhouette

# Combi-sensor

The Combi-sensor is a liquid pressure/temperature sensor that uses piezoresistive and thermistor sensing technology to measure water pressure and temperature. It is designed for use in boiler system water pressure and inflow temperature measurement applications.

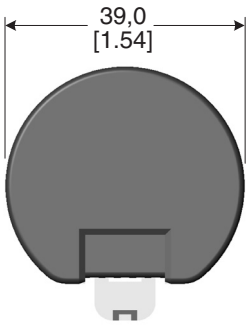


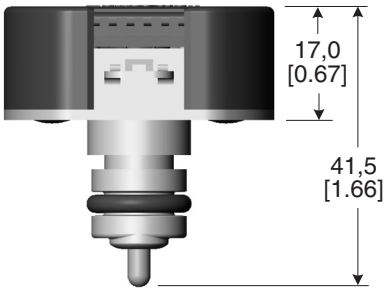


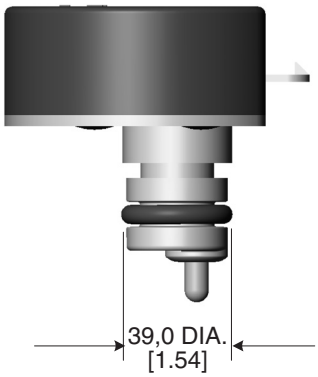


**Pressure range:** 0 bar to 3.0 bar relative
**Accuracy:** ±2 % over full range
**Response time:** <3 s
**Operating temperature:** 5 °C to 110 °C [41 °F to 203 °F]
**Overpressure:** 5 bar for 1 hour
**Burst pressure:** 9 bar for 1 min
**Power supply:** 5 Vdc ±10 %
**Voltage output:** 0.5 Vdc to 4.5 Vdc ratiometric to Vs
**Maximum current limit:** 250 mA (not self-limiting) (for reverse polarity)
**NTC (Negative Temperature Coefficient) characteristics:** 10 kOhm at 25 °C ±3 % beta(25/85) = 3998 K ±2 %
**Connection:** Lumberg rast 2.5 edge connector ESL code 312-600

| DESCRIPTION | REFERENCE |
|---|---|
| Combi-sensor | FS300-100 |

# Heaters

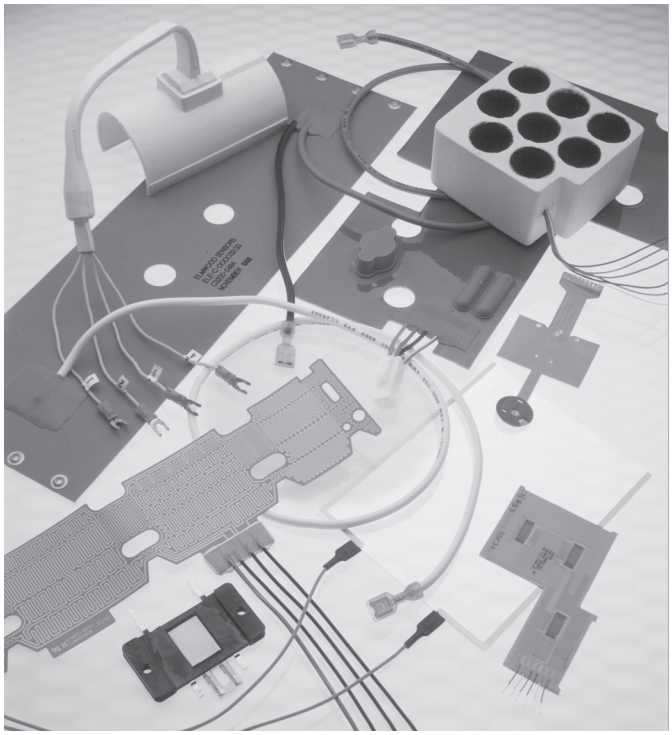

Heaters are resistive devices that are used in a variety of applications such as airborne valves, appliances, satellites and medical electronics. They are available in flat, molded-to-shape, spiral wrap, transparent, composite and high temperature configurations. Honeywell uses a variety of materials to manufacture its heaters. These include silicone, which can easily be vulcanized to metal parts; Kapton®, noted for its thermal stability over a wide temperature range; as well as other flexible dielectric materials. Heaters are available with single, multiple or variable watt densities to customize heat output to unique application needs. They may also be bonded to other system parts or combined with Honeywell thermostats, thermistors, thermocouples, temperature sensors and thermal fuses to form custom-engineered heating systems. Optional PSA (Pressure Sensitive Adhesive) is available with all series.

NOTE: The products in this section do not follow the "how to use this catalogue" instructions provided in the catalogue introduction. Specific reference numbers are not given due to their custom nature. Please contact your local Honeywell sales office for ordering information.

## 3100 Series Silicone Wire-wound Heaters

The 3100 Series contains resistive wire encased between two layers of fiberglass-supported silicone rubber. All bonding adhesives are uncured silicone rubber. These heaters are cured under pressure and temperature during manufacturing. The multi-stranded resistance wires allow wire-wound heaters to conform to three dimensional shapes. Optional PSA (Pressure Sensitive Adhesive) is available with all series.

| | |
|---|---|
| **Maximum power:** | 40 W/in² |
| **Operating/storage temperature range:** | 250 °C [482 °F] max.<br>200 °C [392 °F] max. (UL) |
| **Size constraints:** | None, virtually any size and shape |
| **Geometry:** | Specific to customer requirements |
| **Heater trace pattern:** | Specific to customer requirements |

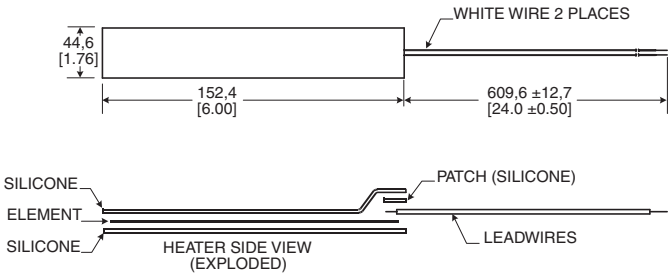


**SERIES NAME**
3100 Silicone Wire-wound Heater

## 3200 Series Silicone Chemically etched Heaters

The 3200 Series contains resistive foil traces encased between two layers of fiberglass-supported silicone rubber. All bonding adhesives are uncured silicone rubber. These heaters are cured under pressure and temperature during their manufacturing. They are often the optimal choice for multiple watt densities or varying trace geometry requirements.

| | |
|---|---|
| **Maximum power:** | 40 W/in² |
| **Operating/storage temperature range:** | 250 °C [482°F] max.<br>200 °C [392 °F] max. (UL) |
| **Size constraints:** | 0,61 m x 0,61 m [24 in x 24 in] |
| **Geometry:** | Specific to customer requirements |
| **Heater trace pattern:** | Specific to customer requirements |

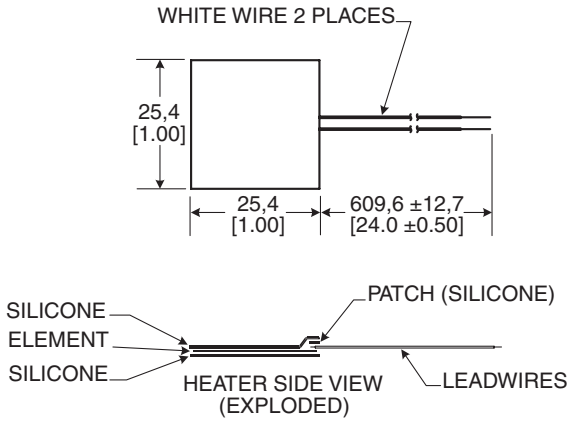


**SERIES NAME**
3200 Silicone Chemically etched Heater

## 3400 Series Kapton® or High Temperature Insulated Heaters

The 3400 Series contains etched, resistive foil encased between two layers of Kapton. The Kapton Insulated Heaters use an acrylic thermoset bonding adhesive, while the Kapton Insulated High Temperature Heaters use a Teflon™ bonding adhesive. Insulated heaters are often used in applications where thin profile and or low material outgassing are important considerations.

**Maximum power:** 40 W/in$^2$
**Operating/storage temp. range:**
- Kapton insulated: 177 °C [350 °F] max.
- Kapton high temperature insulated: 260 °C [500 °F] max.

**Size constraints:** 0,61 m x 0,61 m [24 in x 24 in]
**Geometry:** Specific to customer requirements within size constraints
**Heater trace pattern:** Specific to customer requirements

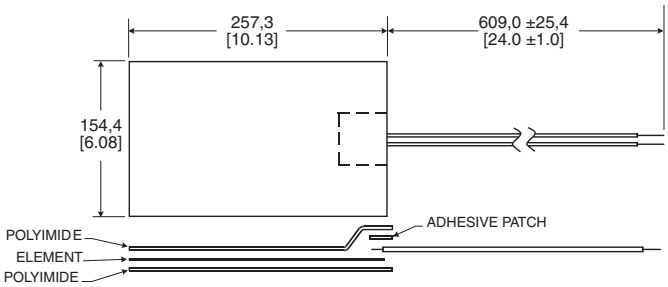


**SERIES NAME**
3400 Kapton or High Temperature Insulated Heater

## 78000 Series Transparent Heaters

The 78000 Series heater resistive element consists of a very thin layer of ITO (Indium Tin Oxide) electrically sputtered on PET polyester film. The electrical connection is made via silver ink or carbon bus bars laid on top of the ITO. Wire connections are made via ring terminals eyeleted to the silver or carbon bus bars or flexible tail/connector. Transparent heaters are often used to warm liquid crystal displays (LCDs) in cold, moist environments.

**Maximum power:** 5 W/in$^2$
**Operating/storage temp. range:** -40 °C to 85 °C [-40 °F to 185 °F]
**Size constraints:** 0,60 m x 0,43 m [22 in x 17 in]
**Geometry:** Specific to customer requirements within size constraints
**Heater trace pattern:** Continuous layer of ITO (Indium Tin Oxide) evenly sputtered across entire surface

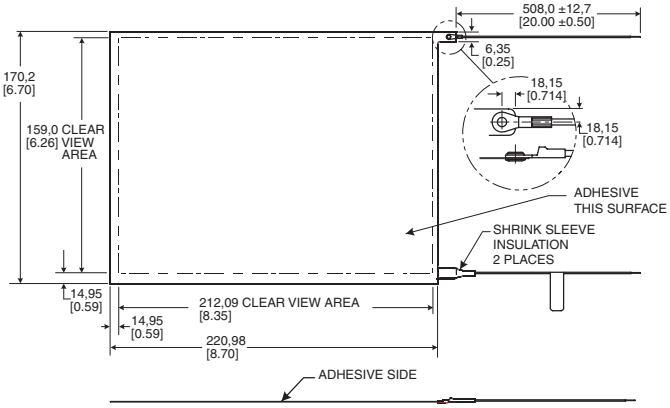


**SERIES NAME**
78000 Transparent Heater

# Magnetic Position Sensors

Honeywell's Solid State Position Sensor family includes digital and analog Hall-effect position sensors, magnetoresistive digital sensors, Hall-effect vane sensors, gear tooth sensors, Hall-effect basic switches, and magnets. Solid State Position Sensors promote reliability, high speed and long life and are directly compatible with other electronic circuits.

Position sensors are often used in applications which require accurate, reliable outputs. They are found in brushless dc motors, utility meters, welding equipment, vending machines, home appliances and computers.

## SS41/SS400 Series and SS51/SS500 Series Hall-effect Digital Position Sensors

The SS41/SS51 Series Bipolar Hall-effect Sensors offer reverse polarity protection, as well as a wide operating voltage and temperature range. The SS400/SS500 Series position sensors have a thermally balanced circuit over the full operating temperature range. The negative compensation slope is optimized to match the negative temperature coefficient of lower-cost magnets. Bipolar, latching, and unipolar magnetic types are available.

**Supply voltage:** 4.5 Vdc to 24 Vdc (SS41/SS51)
3.8 Vdc to 30 Vdc (SS400/SS500)

**Operating temperature:** -40 °C to 150 °C [-40 °F to 302 °F]

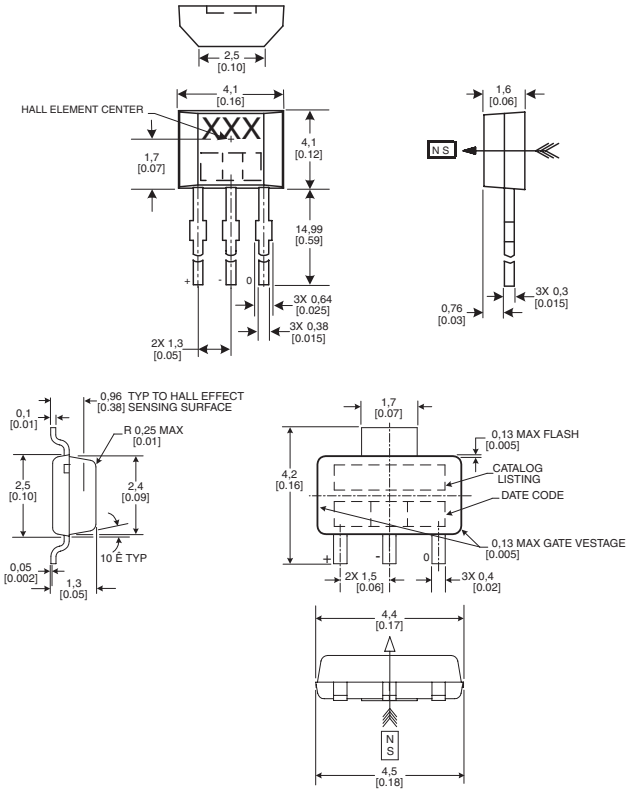


## OPTIONS

**Maximum Operating Point and Minimum Release Point are specified @ 25 °C**

### Bipolar - non-temperature compensated

| OPERATING POINT (MAX.) | RELEASE POINT (MIN.) | PACKAGE STYLE | REFERENCE |
|---|---|---|---|
| 150 Gauss | -140 Gauss | Radial lead IC (SIP) | SS41 |
| 150 Gauss | -140 Gauss | Surface mount (SOT-89) | SS51T |

### Bipolar - temperature compensated

| OPERATING POINT (MAX.) | RELEASE POINT (MIN.) | PACKAGE STYLE | REFERENCE |
|---|---|---|---|
| 60 Gauss | -60 Gauss | Radial lead IC (SIP) | SS411A |
| 140 Gauss | -140 Gauss | Radial lead IC (SIP) | SS413A |
| 60 Gauss | -60 Gauss | Surface mount (SOT-89) | SS511AT |
| 140 Gauss | -140 Gauss | Surface mount (SOT-89) | SS513AT |

### Unipolar - temperature compensated

| OPERATING POINT (MAX.) | RELEASE POINT (MIN.) | PACKAGE STYLE | REFERENCE |
|---|---|---|---|
| 115 Gauss | 20 Gauss | Radial lead IC (SIP) | SS441A |
| 180 Gauss | 75 Gauss | Radial lead IC (SIP) | SS443A |
| 390 Gauss | 235 Gauss | Radial lead IC (SIP) | SS449A |
| 115 Gauss | 20 Gauss | Surface mount (SOT-89) | SS541AT |
| 180 Gauss | 75 Gauss | Surface mount (SOT-89) | SS543AT |
| 390 Gauss | 235 Gauss | Surface mount (SOT-89) | SS549AT |

### Bipolar latching - temperature compensated

| OPERATING POINT (MAX.) | RELEASE POINT (MIN.) | PACKAGE STYLE | REFERENCE |
|---|---|---|---|
| 85 Gauss | -85 Gauss | Radial lead IC (SIP) | SS461A |
| 180 Gauss | -180 Gauss | Radial lead IC (SIP) | SS466A |
| 85 Gauss | -85 Gauss | Surface mount (SOT-89) | SS561AT |
| 180 Gauss | -180 Gauss | Surface mount (SOT-89) | SS566AT |

## SS40A/SS50AT Series

The SS40A/SS50AT Series sensors are low-cost, bipolar, Hall-effect sensors. These sensitive magnetic sensors offer reverse polarity protection and deliver stable output over a -40 °C to 125 °C [-40 °F to 257 °F] temperature range.

**Supply voltage:** 4.5 Vdc to 24 Vdc
**Operating temperature:** -40 °C to 125 °C [-40 °F to 257 °F]
**Magnetic range (25°C):** 110 Gauss (operate point max.)
-110 Gauss (release point min.)

### *OPTIONS*

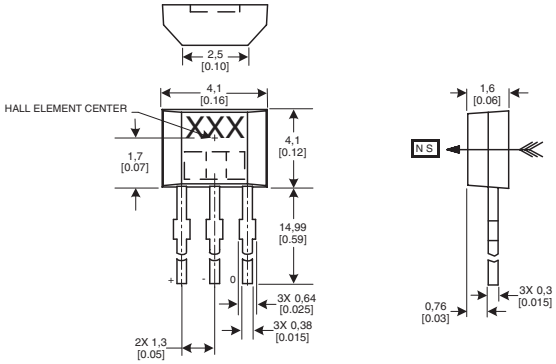


### *Radial IC package*

| LEADS | REFERENCE |
|---|---|
| Standard | SS40A |
| Formed leads on 2,54 mm [0.1 in] centers | SS40A-F |
| Tape-in-box (ammopack) with formed leads | SS40A-T2 |
| Tape-in-box (ammopack) with straight leads | SS40A-T3 |

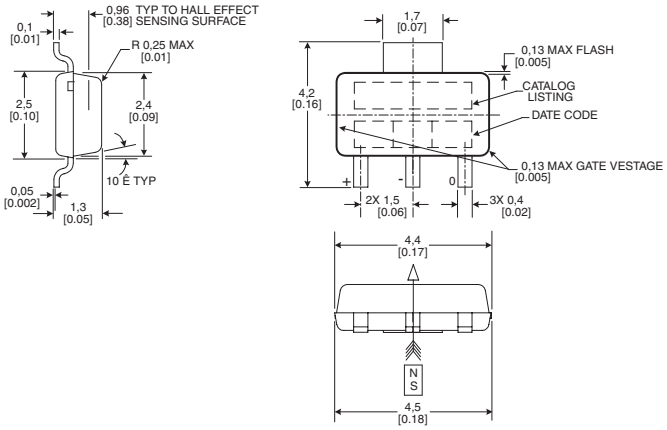


### *Surface-mount package*

| LEADS | REFERENCE |
|---|---|
| Tape and reel | SS50AT |

## SS49E/SS59ET Series

The SS49E/SS59ET Series economical linear Hall-effect sensors are small, versatile devices that are operated by the magnetic field from a permanent magnet or an electromagnet. The linear sourcing output volume is set by the supply voltage and varies in proportion to the strength of the magnetic field

**Supply voltage:** 3.0 Vdc to 6.5 Vdc
**Operating temperature:** -40 °C to 100 °C [-40 °F to 212 °F]
**Magnetic range:** ±1000 Gauss typ.

### *OPTIONS*

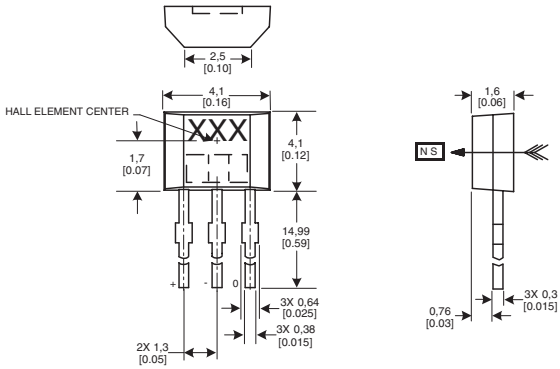


### *Radial IC package*

| LEADS | REFERENCE |
|---|---|
| Standard leads | SS49E |
| Long-leaded version | SS49E-L |
| Tape-and-reel version with formed leads | SS49E-T2 |
| Tape-and-reel version with straight leads | SS49E-T3 |

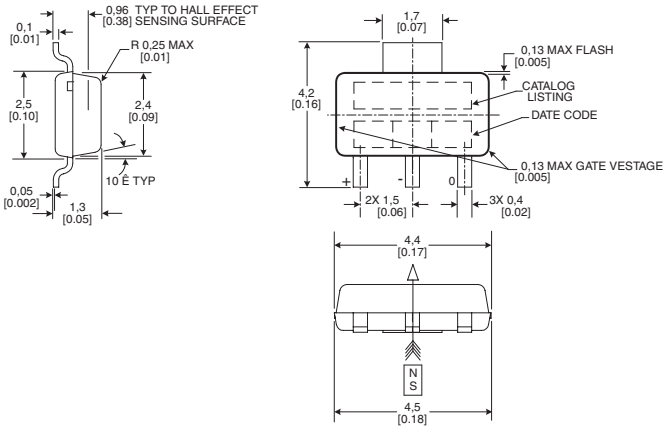


### *Surface-mount package*

| LEADS | REFERENCE |
|---|---|
| Standard surface mount | SS59ET |

## SS490 Series Ratiometric Hall-effect Linear Position Sensors

**Package style:** Plastic radial lead IC
**Supply voltage:** 4.5 Vdc to 10.5 Vdc
**Operating temperature:** -40 °C to 150 °C [-40 °F to 302 °F]

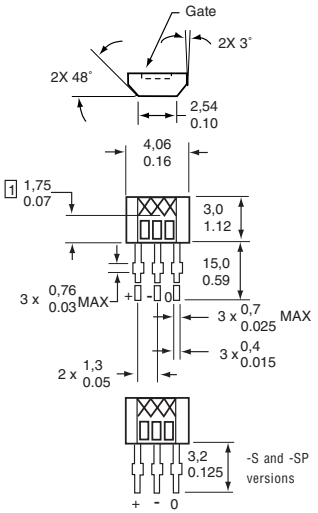


### OPTIONS

#### Magnetic range: -420 Gauss to 420 Gauss

| | PACKAGE STYLE | REFERENCE |
|---|---|---|
| | Radial lead IC | SS494B |
| | Surface mount | SS494B-S |
| | Surface mount reel | SS494B-SP |

#### Magnetic range: -670 Gauss to 670 Gauss

| | PACKAGE STYLE | REFERENCE |
|---|---|---|
| | Radial lead IC | SS495A |
| High accuracy | Radial lead IC | SS495A1 |
| High accuracy | Surface mount | SS495A1-S |
| | Surface mount reel | SS495A-SP |

#### Magnetic range: -840 Gauss to 840 Gauss

| | PACKAGE STYLE | REFERENCE |
|---|---|---|
| | Radial lead IC | SS496A |
| High accuracy | Radial lead IC | SS496A1 |
| High accuracy | Surface mount | SS496A1-S |
| | Surface mount reel | SS4946A-SP |

## SS94 Series Ratiometric Hall-effect Linear Position Sensors

The SS94 utilizes a Hall-effect integrated circuit chip which promotes increased temperature stability and performance. Laser-trimmed thick film resistors on the ceramic substrate and thin film resistors on the integrated circuit reduce null and gain shifts over temperature which results in consistent sensitivity from one device to the next

**Package style**: Ceramic
**Operating temperature:** -40 °C to 125 °C [-40 °F to 257 °F]
-55 °C to 150 °C [-67 °F to 302 °F](SS94B1A only)

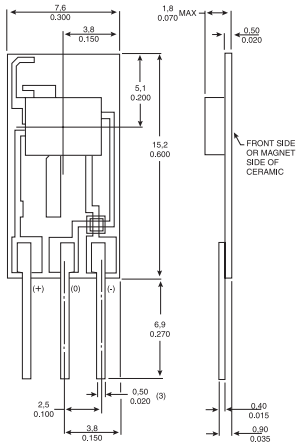


### OPTIONS

#### General purpose

| MAGNETIC RANGE | SUPPLY VOLTAGE | SENSITIVITY @ 25 °C | REFERENCE |
|---|---|---|---|
| -500 Gauss to 500 Gauss | 6.6 Vdc to 12.6 Vdc | 5.0 mV ±0.1 mV/G | SS94A1 |
| -500 Gauss to 500 Gauss | 4.5 Vdc to 8.0 Vdc | 1.875 mV ±0.1 mV/G | SS94A1B |
| -670 Gauss to 670 Gauss | 4.5 Vdc to 12.0 Vdc | 3.125 mV ±0.069 mV/G | SS94B1 |
| 275 Gauss to 1030 Gauss | 4.5 Vdc to 10.5 Vdc | 5.62 mV ±0.112 mV/G | SS94B1A |

#### Low drift

| MAGNETIC RANGE | SUPPLY VOLTAGE | SENSITIVITY @ 25 °C | REFERENCE |
|---|---|---|---|
| -500 Gauss to 500 Gauss | 6.6 Vdc to 12.6 Vdc | 5.0 mV ±0.1 mV/G | SS94A1E |

#### High sensitivity

| MAGNETIC RANGE | SUPPLY VOLTAGE | SENSITIVITY @ 25 °C | REFERENCE |
|---|---|---|---|
| -100 Gauss to 100 Gauss | 6.6 Vdc to 12.6 Vdc | 25.0 mV ±0.5 mV/G | SS94A1F |

#### Noise shielded

| MAGNETIC RANGE | SUPPLY VOLTAGE | SENSITIVITY @ 25 °C | REFERENCE |
|---|---|---|---|
| -500 Gauss to 500 Gauss | 6.6 Vdc to 12.6 Vdc | 5.0 mV ±0.1 mV/G | SS94A2 |
| -1000 Gauss to 1000 Gauss | 6.6 Vdc to 12.6 Vdc | 2.5 mV ±0.05 mV/G | SS94A2C |
| -2500 Gauss to 2500 Gauss | 6.6 Vdc to 12.6 Vdc | 1.0 mV ±0.02 mV/G | SS94A2D |

## 2SS Series Magnetoresistive Digital Position Sensors

2SS Series position sensors have magnetoresistive material integrated on silicon and encapsulated in a plastic package. The integrated circuit provides a digital output in response to very low magnetic fields.

**Supply voltage**: 3.8 Vdc to 30 Vdc
**Operating temperature:** -40 °C to 150 °C [-40 °F to 302 °F]
**Maximum operating point:** 25 Gauss
**Minimum release point:** 5 Gauss

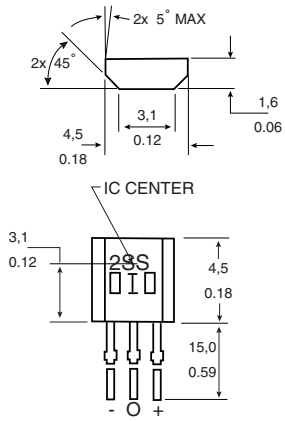


### Omnipolar

| PACKAGE STYLE | REFERENCE |
|---|---|
| Radial lead IC | 2SS52M |
| Surface Mount | 2SS52M-S |

## SS552MT Series Surface-Mount Sensors

**Package style:** Surface mount
**Supply voltage:** 3.8 Vdc to 30 Vdc
**Operating temperature:** -40 °C to 150 °C [-40 °F to 302 °F]

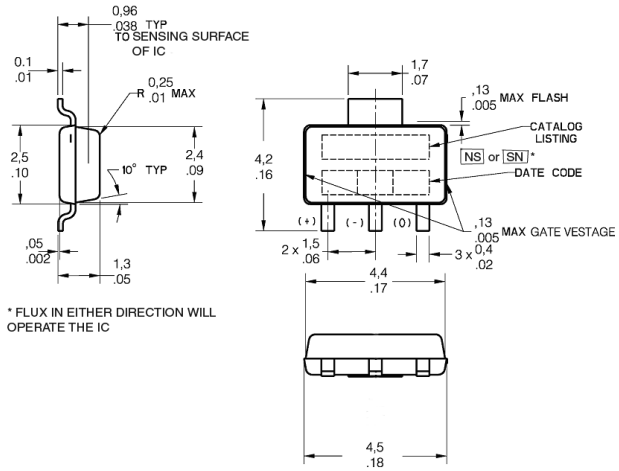


| PACKAGE STYLE | REFERENCE |
|---|---|
| Surface Mount | SS552MT |

## 5SS Series Hall-effect Digital Position Sensors

5SS Series Hall-effect digital sensors detect a unipolar target and function as a magnetically operated solid state switch.

**Package style:** Threaded boss, quick-connect terminals
**Operating temperature:** -40 °C to 150 °C [-40 °F to 302 °F]
-40 °C to 100 °C [-40 °F to 212 °F]
**Output type**: Sink

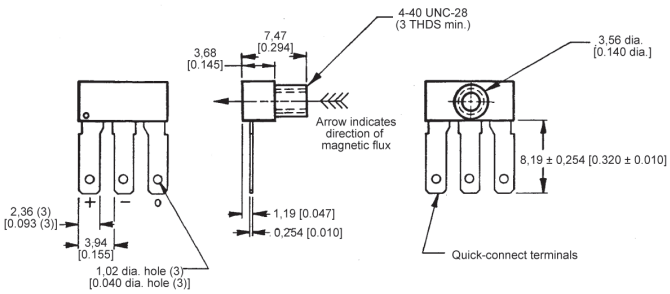


## OPTIONS

### Unipolar

| SUPPLY VOLTAGE | OPERATE POINT | RELEASE POINT | REFERENCE |
|---|---|---|---|
| 6 Vdc to 16 Vdc | 34.0 mT [340 G] max. | 3.0 mT [30 G] min. | 513SS16 |
| 4.5 Vdc to 9.0 Vdc | 40.0 mT [400 G] max. | 5.7 mT [57 G] min. | 55SS13 |

### Bipolar

| SUPPLY VOLTAGE | OPERATE POINT | RELEASE POINT | REFERENCE |
|---|---|---|---|
| 6 Vdc to 16 Vdc | 14.0 mT [140 G] max. | -14 mT [-140 G] min. | 517SS16 |

## 6SS Series Hall-effect Digital Position Sensors

6SS Series position sensors act on unipolar targets, provide dual output and function as a magnetically operated solid state switch.

**Package style:** PCB DIP IC
**Operating temperature:** -40 °C to 150 °C [-40 °F to 302 °F]
-40 °C to 100 °C [-40 °F to 212 °F]
**Output type**: Sink

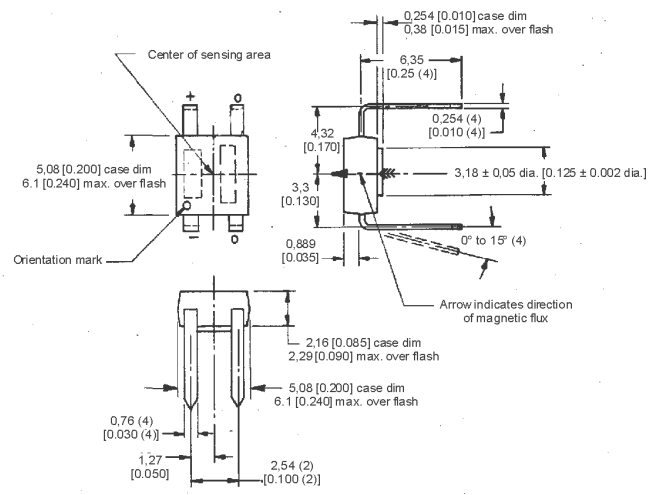


| SUPPLY VOLTAGE | OPERATE POINT | RELEASE POINT | REFERENCE |
|---|---|---|---|
| 6 Vdc to 16 Vdc | 49.5 mT [495 G] max. | 5.0 mT [50 G] min. | 613SS2 |
| 4.5 Vdc to 9.0 Vdc | 57.5 mT [575 G] max. | 8.2 mT [82 G] min. | 65SS4 |

# 103SR Series Cylindrical Hall-effect Position Sensors

Hall-effect position sensors in a rugged aluminum housing. These position sensors meet NEMA 3, 3R, 12 and 13 sealing requirements.

**Package style**: Aluminum
**Operating temperature:** -40 °C to 100 °C [-40 °F to 212 °F]

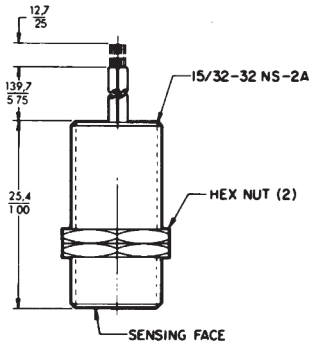


## Linear

| MAGNETIC RANGE | SUPPLY VOLTAGE | SENSITIVITY @ 25 °C | REFERENCE |
|---|---|---|---|
| -670 to 670 Gauss | 4.5 Vdc to 10.5 Vdc | 3.125 mV/G | 103SR19A-1 |

## Unipolar

| OPERATING POINT (MAX.) | RELEASE POINT (MIN.) | SUPPLY VOLTAGE | REFERENCE |
|---|---|---|---|
| 400 Gauss | 250 Gauss | 4.5 Vdc to 24 Vdc | 103SR13A-1 |
| 90 Gauss | 45 Gauss | 4.5 Vdc to 24 Vdc | 103SR14A-1 |

## Bipolar

| OPERATING POINT (MAX.) | RELEASE POINT (MIN.) | SUPPLY VOLTAGE | REFERENCE |
|---|---|---|---|
| 50 Gauss | -50 Gauss | 4.5 Vdc to 24 Vdc | 103SR17A-1 |

## Bipolar latching

| OPERATING POINT (MAX.) | RELEASE POINT (MIN.) | SUPPLY VOLTAGE | REFERENCE |
|---|---|---|---|
| 50 Gauss | -50 Gauss | 4.5 Vdc to 24 Vdc | 103SR18A-1 |

# SR3/SR4 Series Cylindrical Digital Position Sensors

The SR3 Series Hall-effect digital position sensors are enclosed in a plastic cylindrical housing and meet NEMA 3, 3R, 3S, 4, 4X, 12 and 13 requirements. The sensors are capable of operation at frequencies exceeding 100 Hz. The SR4 Series digital position sensors contain a magnetoresistive sensing element. The SR4 Series will typically sense either a north or south pole at a level of 15 Gauss.

**Package style**: Plastic - PBT
**Operating temperature:** -40 °C to 85 °C [-40 °F to 185 °F]

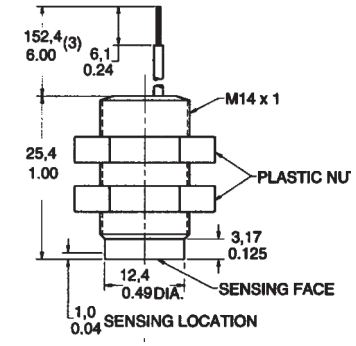


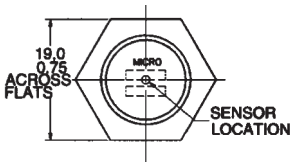


## OPTIONS

### Bipolar

| OPERATING POINT (MAX.) | RELEASE POINT (MIN.) | SUPPLY VOLTAGE | REFERENCE |
|---|---|---|---|
| 90 Gauss | -90 Gauss | 4.5 Vdc to 24 Vdc | SR3B-A1 |

### Unipolar

| OPERATING POINT (MAX.) | RELEASE POINT (MIN.) | SUPPLY VOLTAGE | REFERENCE |
|---|---|---|---|
| 150 Gauss | -50 Gauss | 4.5 Vdc to 24 Vdc | SR3C-A1 |
| 400 Gauss | 185 Gauss | 4.5 Vdc to 24 Vdc | SR3F-A1 |
| 350 Gauss | 260 Gauss | 4.5 Vdc to 24 Vdc | SR3G-A1 |

### Omnipolar

| OPERATING POINT (MAX.) | RELEASE POINT (MIN.) | SUPPLY VOLTAGE | REFERENCE |
|---|---|---|---|
| 25 Gauss | 5 Gauss | 3.8 Vdc to 30 Vdc | SR4P3-A1 |

# SR13 Series Hall-effect Digital Position Sensors

SR13 series Hall-effect digital position sensors permit quick and easy sensor installation, with snap-in and flat mount sensor packages, and can house any of the present SS400 Series sensors or any similarly sized sensing elements.

**Package style:** Plastic snap-in
**Supply voltage**: 3.8 Vdc to 30 Vdc
**Operating temperature:** -40 °C to 150 °C [-40 °F to 302 °F]

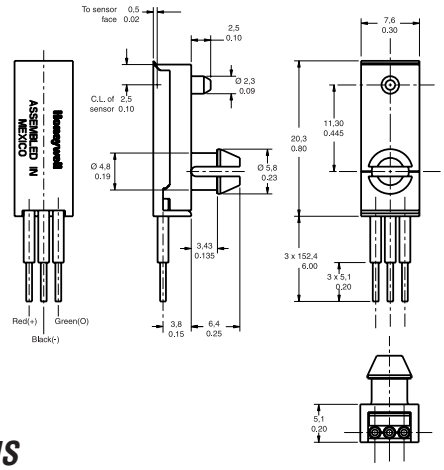


## OPTIONS

**Maximum Operating Point and Minimum Release Point are specified @ 25 °C**

### Unipolar

| OPERATING POINT (MAX.) | RELEASE POINT (MIN.) | REFERENCE |
|---|---|---|
| 180 Gauss | 75 Gauss | SR13C-A1 |
| 115 Gauss | 20 Gauss | SR13D-A1 |
| 390 Gauss | 235 Gauss | SR13F-A1 |

### Bipolar latching

| OPERATING POINT (MAX.) | RELEASE POINT (MIN.) | REFERENCE |
|---|---|---|
| 85 Gauss | -85 Gauss | SR13R-A1 |

## SR16 Series Cost-effective Digital Vane Sensors

SR16 Series competitively priced Hall-effect digital vane sensors contain an internal magnet and Hall-effect sensor mounted in a dual tower configuration.

**Package style:** Dual tower
**Supply voltage**: 3.8 Vdc to 30 Vdc
**Operating temperature:** -20 °C to 85 °C [-4 °F to 185 °F]

### *OPTIONS*

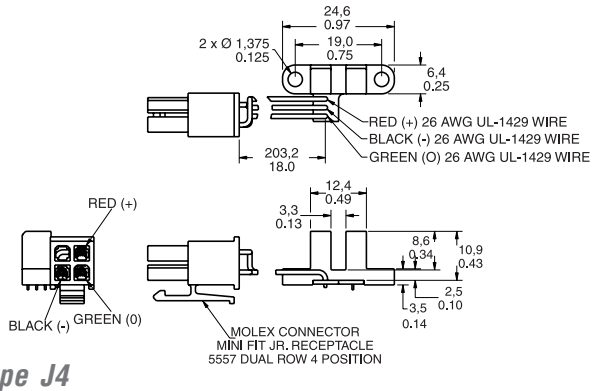


### *Type J4*

| ACKAGE STYLE | REFERENCE |
|---|---|
| PCB/Molex 5557 connector | SR16C-J4 |

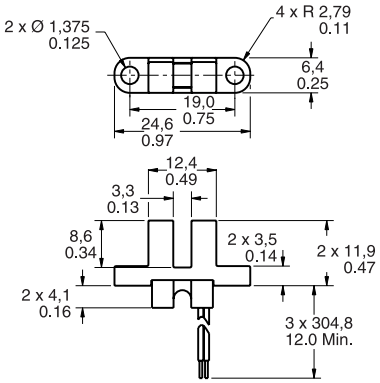


### *Type J6*

| ACKAGE STYLE | REFERENCE |
|---|---|
| Wire exit | SR16C-J6 |

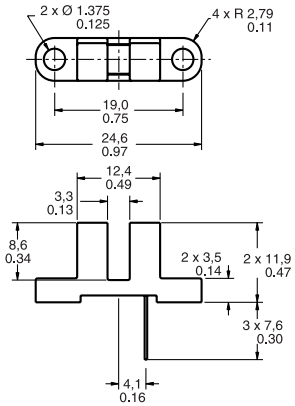


### *Type N*

| PACKAGE STYLE | REFERENCE |
|---|---|
| PCB mount leads | SR16C-N |

## SR17 Series Cost-effective Digital Vane Sensors

SR17 Series competitively priced Hall-effect digital vane sensors are designed for position and speed sensing and are offered in a side-mount twin tower package.

**Package style:** Side looker mounting
**Supply voltage**: 3.8 Vdc to 30 Vdc
**Operating temperature:** -20 °C to 85 °C [-4 °F to 185 °F]

### *OPTIONS*

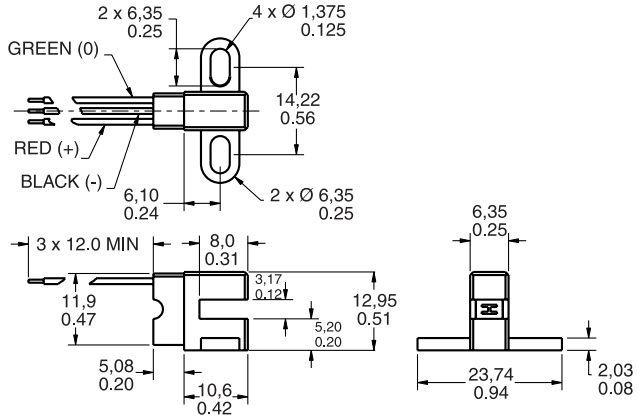


### *Type J6*

| PACKAGE STYLE | REFERENCE |
|---|---|
| Side mount wire exit | SR17C-J6 |

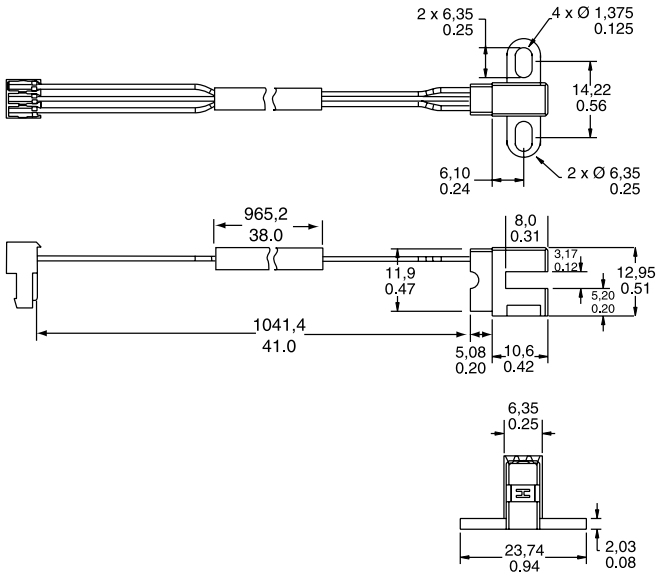


### *Type J7*

| PACKAGE STYLE | REFERENCE |
|---|---|
| 41 in wire leads and connector | SR17C-J7 |

# Infrared Products

Optoelectronics is the integration of optical principles and semi-conductor electronics. Optoelectronic components are reliable, cost-effective sensors. Standard infrared emitting diodes (IREDs), IR detectors and assemblies are covered.

Infrared sensors are often used for presence sensing, motion sensing, position encoding, limit sensing, movement detection and counting.

## Infrared Emitting Diodes

### *OPTIONS*

### *Metal package, end-emitting*

### Coaxial, lead case - SE1450/1470(L)

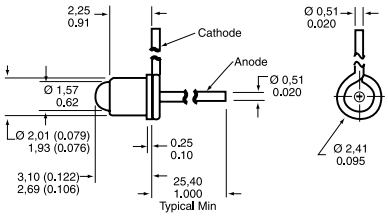


### Miniature pill pack - SE2460/2470

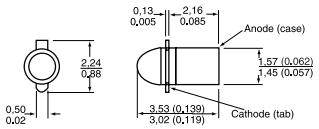


### TO-46, flat window - SE3455/3470

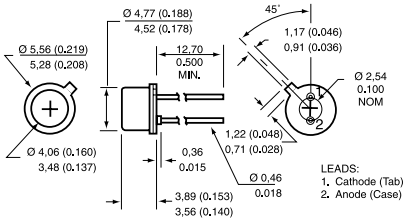


### TO-46, dome lensed - SE5455/5470

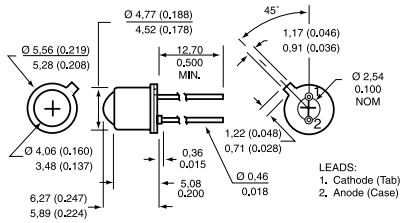


**Operating temperature:** -55 °C to 125 °C [-67 °F to 257 °F]

| OUTPUT WAVELENGTH (nm) | BEAM ANGLE (°) | POWER OUTPUT | REFERENCE |
|---|---|---|---|
| 935 | 24 | 0.70 mW min. | SE1450-003L |
| 880 | 24 | 1.10 to 4.50 mW/cm² | SE1470-003L |
| 935 | 18 | 1.00 mW min. | SE2460-003 |
| 880 | 18 | 6.0 mW/sr min. | SE2470-002 |
| 935 | 90 | 5.4 mW min. | SE3455-004 |
| 880 | 90 | 10.5 mW min. | SE3470-003 |
| 935 | 20 | 4.8 mW min. | SE5455-003 |
| 880 | 20 | 3.5 mW/cm² min. | SE5470-004 |

### *Plastic package*

### T1, end-emitting - SEP8505/8705

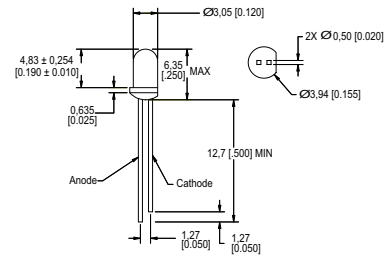


### Side-emitting - SEP8506/8706

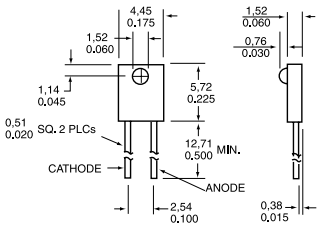


### Side-emitting - SEP8736

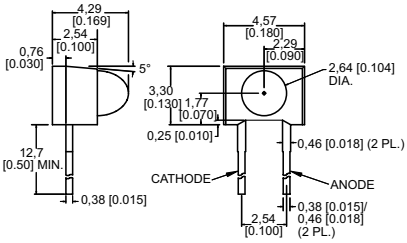


**Operating temperature:** -40 °C to 85 °C [-40 °F to 185 °F]

| OUTPUT WAVELENGTH (nm) | BEAM ANGLE (°) | POWER OUTPUT | REFERENCE |
|---|---|---|---|
| 935 | 15 | 2.0 to 4.0 mW/cm² | SEP8505-003 |
| 935 | 50 | 0.33 to 0.52 mW/cm² | SEP8506-002 |
| 880 | 15 | 2.7 to 7.8 mW/cm² | SEP8705-003 |
| 880 | 10 | 1.7 to 3.0 mW/cm² | SEP8736-003 |

### *Ceramic discrete surface mount - glass lens*

### SME2470

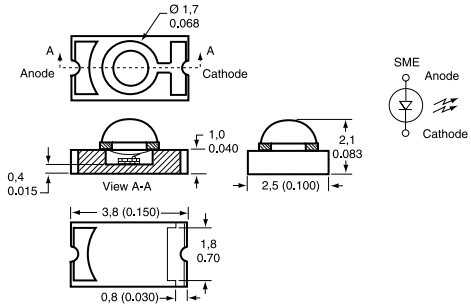


***Note:***
*This device can be mounted with the lens up or down, looking through PCB.*

**Operating temperature:** -55 °C to 125 °C [-67 °F to 257 °F]

| OUTPUT WAVELENGTH (NM) | BEAM ANGLE (°) | POWER OUTPUT | REFERENCE |
|---|---|---|---|
| 880 | 24 | 0.60 mW/cm² min. | SME2470-021 |

# Phototransistors

## *OPTIONS*

### *Metal package*

### Coaxial, lead case - SD1440(L)

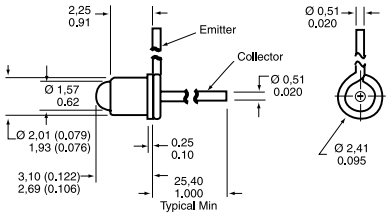


### Miniature pill pack - SD2440

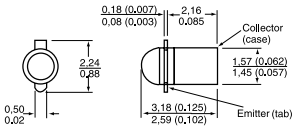


### TO-46, flat window - SD3443

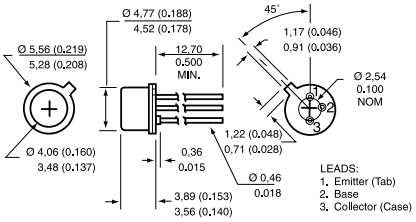


### TO-46, dome lensed - SD5443

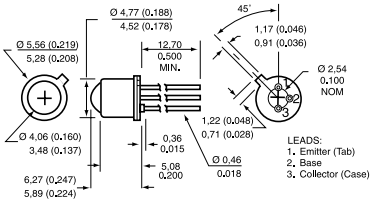


**Operating temperature:** -55 °C to 125 °C [-67 °F to 257 °F]

| ANGULAR RESPONSE (°) | LIGHT CURRENT MINIMUM (mA) | REFERENCE |
|---|---|---|
| 24 | 3.0 | SD1440-003L |
| 48 | 7.0 | SD2440-004 |
| 90 | 2.0 | SD3443-003 |
| 18 | 8.0 | SD5443-003 |

### *Plastic package*

### T1, end-looking - SDP8405

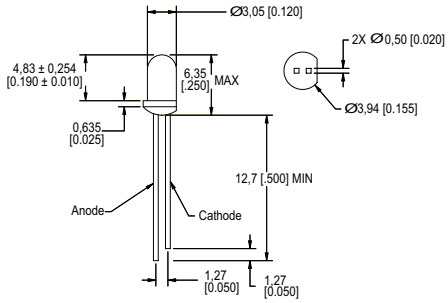


### Side-looking - SDP8406

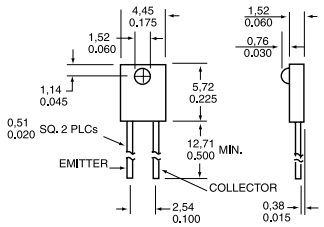


### Side-looking - SDP8436

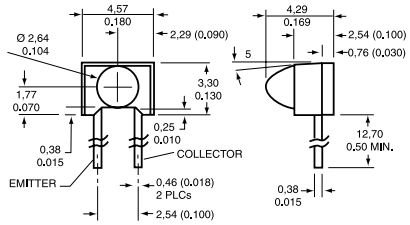


**Operating temperature:** -40 °C to 85 °C [-40 °F to 185 °F]

| ANGULAR RESPONSE (°) | LIGHT CURRENT MINIMUM (mA) | REFERENCE |
|---|---|---|
| 20 | 12.0 | SDP8405-003 |
| 50 | 1.80 | SDP8406-002 |
| 18 | 7.0 | SDP8436-003 |

### *Ceramic discrete surface mount - glass lens*

### Top-looking - SMD2420/2440

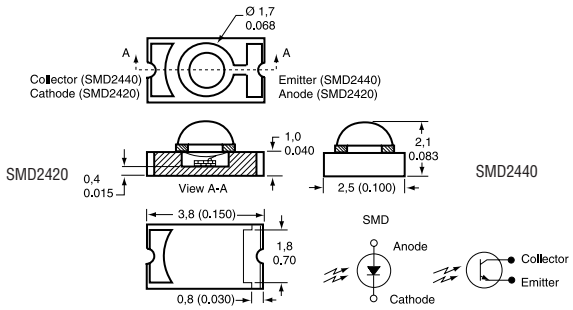


***Note:***
*This device can be mounted with the lens up or down, looking through PCB.*

**Operating temperature:** -55 °C to 125 °C [-67 °F to 257 °F]

| ANGULAR RESPONSE (°) | LIGHT CURRENT MINIMUM (mA) | REFERENCE |
|---|---|---|
| 28 | 3.0 | SMD2440-012 |

# Optoschmitt Detectors

## OPTIONS

### Metal package

### TO-46, dome lensed

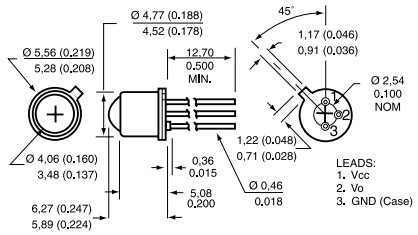


**Operating temperature:** -40 °C to 100 °C [-40 °F to 212 °F]
**Supply voltage:** 4.5 V to 16.0 V
**Output**: 10 kOhm Pull-up
**Angular response:** 12°

| OUTPUT LOGIC | TURN-ON THRESHOLD IRRADIANCE | REFERENCE |
|---|---|---|
| Buffer | 2.5 mW/cm² max. | SD5600-001 |
| Inverter | 2.5 mW/cm² max. | SD5610-001 |
| Buffer | 0.25 mW/cm² | SD5620-001 |
| Inverter | 0.25 mW/cm² | SD5630-001 |

### Plastic package

### Side-looking

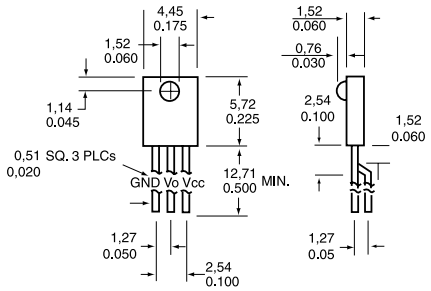


**Operating temperature:** -40 °C to 85 °C [-40 °F to 185 °F]
**Supply voltage:** 4.5 V to 12.0 V
**Output**: 10 kOhm Pull-up
**Angular response:** 50°

| OUTPUT LOGIC | TURN-ON THRESHOLD IRRADIANCE | REFERENCE |
|---|---|---|
| Buffer | 2.5 mW/cm² max. | SDP8600-001 |

# Encoder Sensors

**Operating temperature:** -40 °C to 85 °C [-40 °F to 185 °F]
**Turn-on threshold irradiance:** 0.05 mW/cm² to 2.0 mW/cm²
**Supply voltage:** 4.5 Vdc to 5.5 Vdc
**Package style:** Plastic, PC mount

## OPTIONS

### Side-looking - HLC2701/HLC2705

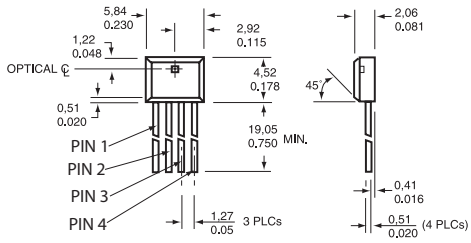


LEADS

| HLC 2701 | HLC2705 |
|---|---|
| 1. B out | 1. Direction out |
| 2. Vcc | 2. Vcc |
| 3. Gnd | 3. Gnd |
| 4. A out | 4. Speed (Tach) out |

### PC mount - HOA0901/0902

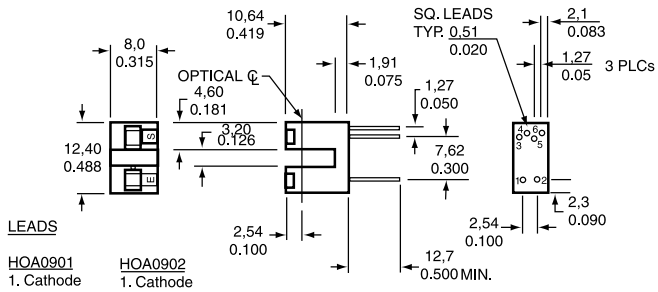


LEADS

| HOA0901 | HOA0902 |
|---|---|
| 1. Cathode | 1. Cathode |
| 2. Anode | 2. Anode |
| 3. Output A | 3. Speed |
| 4. GND | 4. GND |
| 5. Vcc | 5. Vcc |
| 6. Output B | 6. Direction |

| OUTPUT OPTION | REFERENCE |
|---|---|
| A and B output | HLC2707-001 |
| Speed and direction | HLC2705-001 |
| Direction, inverting logic | HOA0901-011* |
| Speed and direction, 2 tachometer | HOA0902-011* |

* -012 version not shown, has dual mounting tabs

**NOTICE**

Housings are soluble in chlorinated hydrocarbons and ketones. Recommended cleaning agents are methanol and isopropanol.

# Reflective Sensors

## OPTIONS

### Metal components

### Converging/focused optical axis - HOA1180

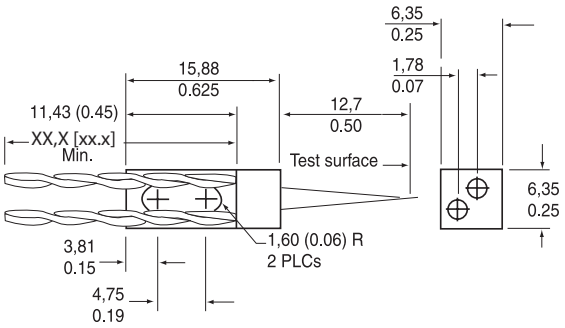


### Converging/focused optical axis - HOA2498

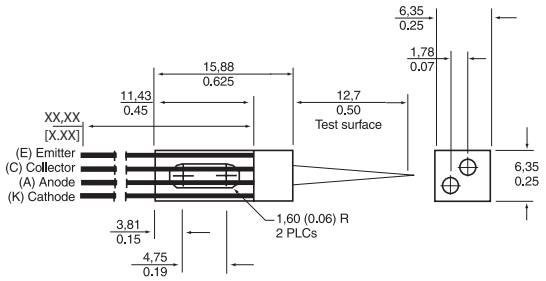


**Operating temperature:** -55 °C to 100 °C [-67 °F to 212 °F]
**Output:** Transistor

| ON-STATE COLLECTOR CURRENT | REFERENCE |
|---|---|
| 0.16 mA | HOA1180-002 |
| 0.16 mA | HOA2498-002 |

### Plastic package

### HLC1395 Series, short distance detection

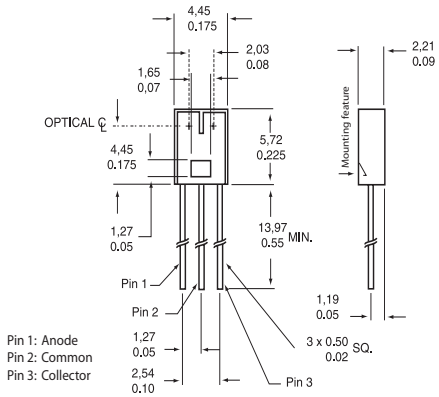


(1,0 mm/0.04 in) point of optimum response

### HOA Series

### Converging/focused optical axis - HOA0149

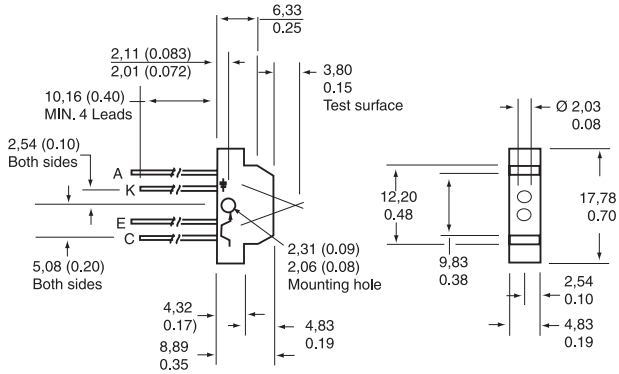


### HOA1397

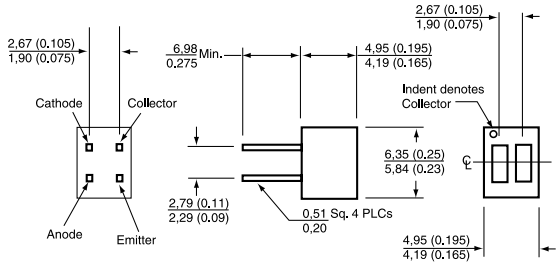


(1,27 mm/0.05 in) point of optimum response

### Converging/focused optical axis - HOA1405

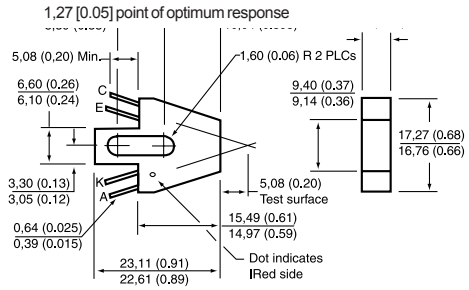


**Operating temperature:** -40 °C to 85 °C [-40 °F to 185 °F]
**Output:** Transistor

| | ON-STATE COLLECTOR CURRENT | REFERENCE |
|---|---|---|
| | 0.60 mA | HLC1395-002 |
| Low profile | 1.00 mA | HOA0149-001 |
| | 0.70 mA | HOA1397-002 |
| | 0.80 mA | HOA1405-002 |

**NOTICE**

Housings are soluble in chlorinated hydrocarbons and ketones. Recommended cleaning agents are methanol and isopropanol.

# Transmissive Sensors, Phototransistor Output

## OPTIONS

### Metal components

### HOA1877

**Aperture (emitter and detector):** Ø 1,27 mm [0.050 in]

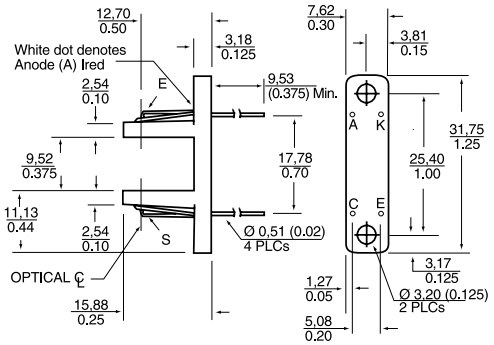


**Operating temperature:** -55 °C to 100 °C [-67 °F to 212 °F]
**Output:** Transistor

| ON-STATE COLLECTOR CURRENT | REFERENCE |
|---|---|
| 0.1 mA | HOA1877-001 |

### Plastic components

### HOA086X/087X (L,N,T,P ear versions available)

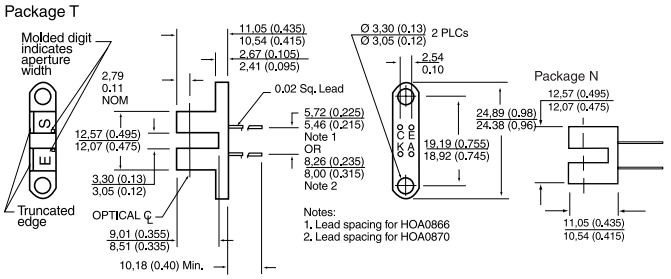


### HOA1879

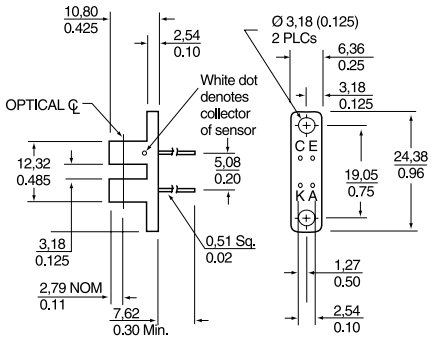


**NOTICE**

Housings are soluble in chlorinated hydrocarbons and ketones. Recommended cleaning agents are methanol and isopropanol.

### HOA1882

**Aperture (emitter and detector):** Ø 1,52 mm [0.060 in]

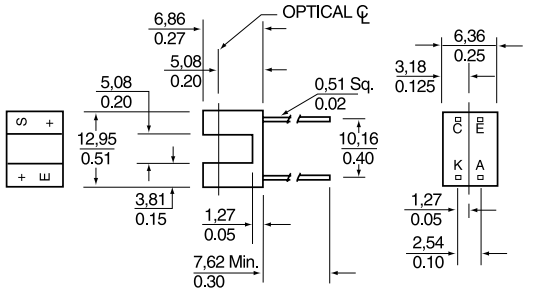


### Plastic components, wire leads

### HOA088X/089X (L,N,T, P ear versions available)

**Wire colour code and functions:**

Red - IRED Anode
Black - IRED Cathode
White - Detector Collector
Green - Detector Emitter

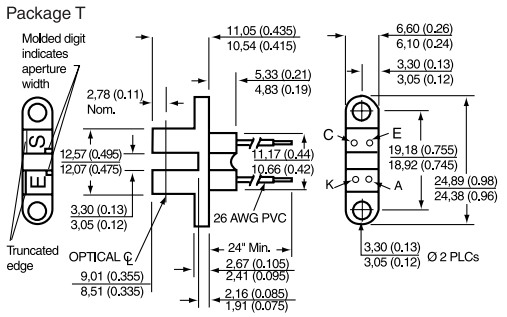


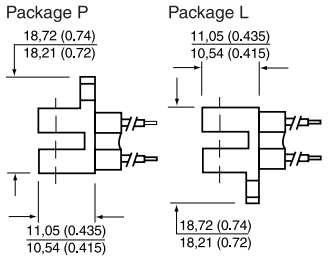


### HOA1870

**Wire colour code and functions:**

Orange - IRED Anode
Green - IRED Cathode
White - Detector Collector
Blue - Detector Emitter

**Aperture (emitter and detector):** 0,15 mm [0.006 in] wide

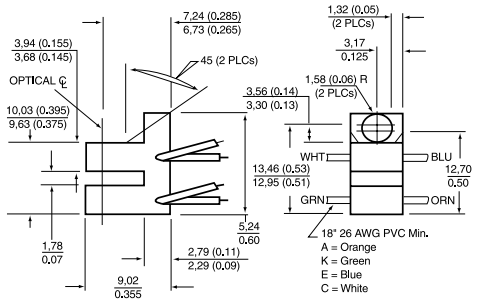


**Operating temperature:** -40 °C to 85 °C [-40 °F to 185 °F]
**Output:** Transistor

| | ON-STATE COLLECTOR CURRENT | REFERENCE |
|---|---|---|
| | 1.00 mA | HOA0866-T55 |
| Opaque housing | 0.50 mA | HOA0870-N51 |
| | 0.50 mA | HOA0880-P51 |
| Opaque housing | 0.50 mA | HOA0890-L55 |
| | 0.30 mA | HOA1870-031 |
| | 0.50 mA | HOA1879-015 |
| | 1.80 mA | HOA1882-012 |

# Transmissive Sensors, Optoschmitt Output

## OPTIONS

### Plastic components

**HOA096X/097X**
**HOA696X/697X**

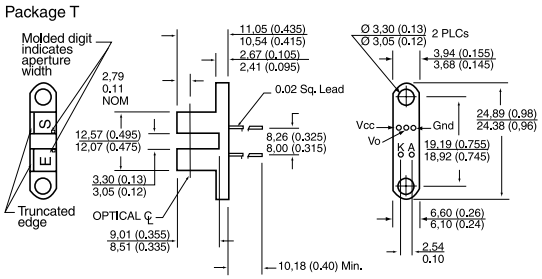


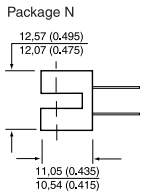


### Plastic components, wire leads

**HOA698X/699X (L,N,T, P ear versions available)**

**Wire colour code and functions:**

Red - IRED Anode
Black - IRED Cathode
Green - Detector Ground
White - Detector Vcc
Blue - Detector Output

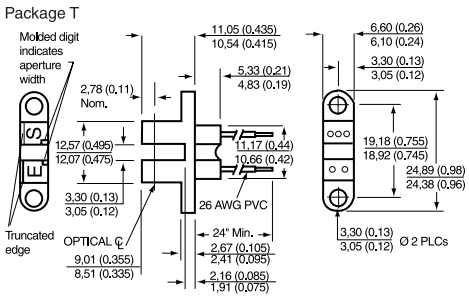


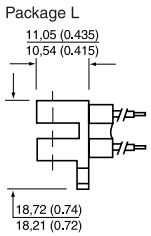


### Plastic components, integral 3 pin connector

**HOA7720/30**

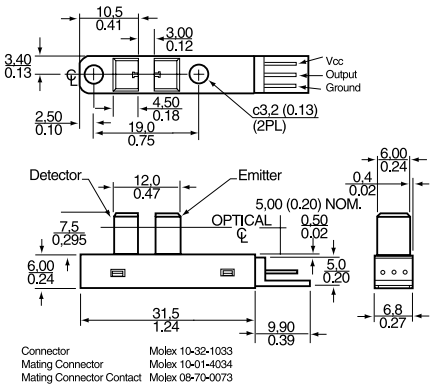


**Operating temperature:** -40 °C to 70 °C [-40 °F to 158 °F]

| | OUTPUT | OUTPUT LOGIC | HYSTERESIS | REFERENCE |
|---|---|---|---|---|
| | 10 kOhm Pull-up | Buffer | 10 % | HOA0961-N51 |
| Opaque housing | 10 kOhm Pull-up | Buffer | 10 % | HOA0971-N51 |
| | Open-Collector | Inverter | 5 % | HOA6963-N51 |
| Opaque housing | Totem-Pole | Inverter | 5 % | HOA6972-N55 |
| | Open-Collector | Buffer | 5 % | HOA6981-L51 |
| Opaque housing | Totem-Pole | Buffer | 5 % | HOA6990-T51 |
| | Totem-Pole | Inverter | 5 % | HOA7720-M22 |
| | Open-Collector | Inverter | 5 % | HOA7730-M22 |

**NOTICE**

Housings are soluble in chlorinated hydrocarbons and ketones. Recommended cleaning agents are methanol and isopropanol.

# HOD Series Single Fiber Duplex Modules

The HOD Series allows full duplex communication over a single fiber link. These products may also be used where a dual fiber solution is neither possible nor economical. Each duplex module consists of one on-axis port and one off-axis port, each configured with the appropriate devices.

**Link bandwidth:** dc to 160 MHz
**Link budgets**: 2 km [1.24 miles] or greater
**Operating temperature:** 0 °C to 70 °C [32 °F to 158 °F]

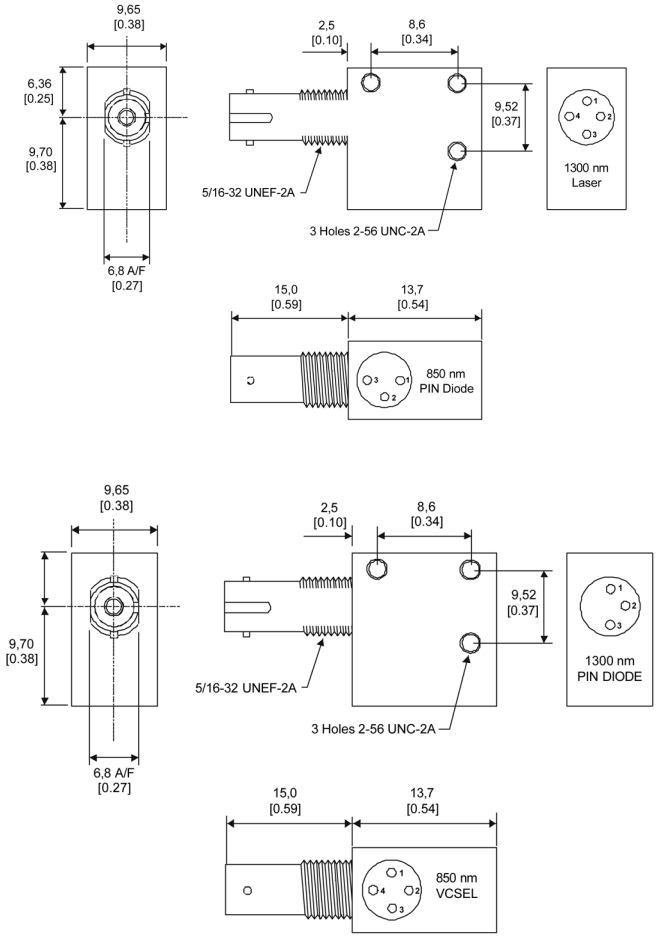


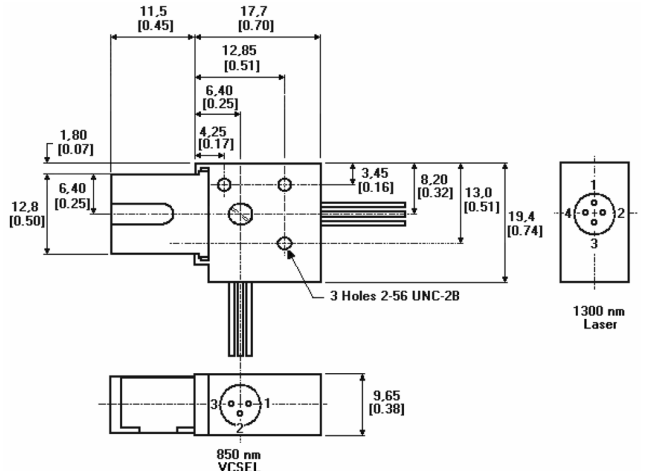


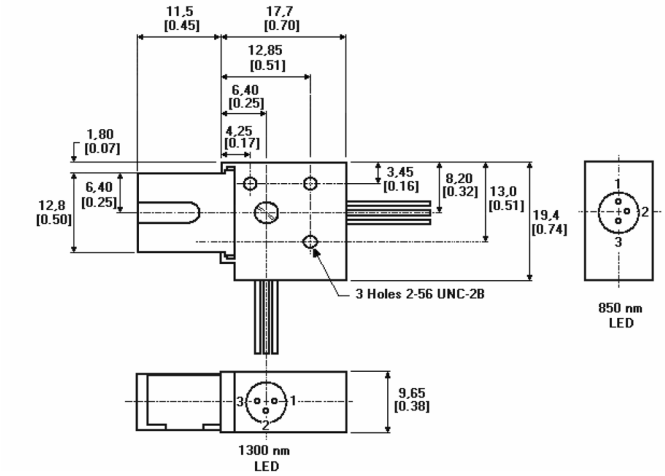


## ST housing

| PORT 1 DEVICE | PORT 2 DEVICE | REFERENCE |
|---|---|---|
| 1300 nm LED/Laser | 850 nm PIN | HOD2236-111/BBA |
| 1300 nm PIN | VCSEL | HOD4090-111/BBA |

## SC connector

| PORT 1 DEVICE | PORT 2 DEVICE | REFERENCE |
|---|---|---|
| 1300 nm LED/Laser | VCSEL | HOD2294-111/EBA |
| 850 nm LED | 1300 nm LED/Laser | HOD1121-411/EBA |

# Current Sensors

Current sensors monitor ac or dc current. Included are adjustable linear, null balance, digital and linear current sensors.

Digital current sensors can sound an alarm, start a motor, open a valve or shut down a pump. The linear signal duplicates the waveform of the current being sensed, and can be used as a feedback element to control a motor or regulate the amount of work being done by a machine.

## Closed Loop Current Sensors

Closed loop current sensors measure ac, dc and impulse currents over 0 A to 25 A, 0 A to 50 A, 0 A to 100 A, 0 A to 600 A and 0 A to 1200 A ranges. The CSN series is based on the Hall-effect principle and the null balance or zero magnetic flux method (feedback system). The magnetic flux in the sensor core is constantly controlled at zero. The amount of current required to balance zero flux is the measure of the primary current flowing through the conductor, multiplied by the ratio of the primary to secondary windings. This closed loop current is the output from the device and presents an image of the primary current reduced by the number of secondary turns at any time. This current can be expressed as a voltage by passing it through a resistor.

The CSN Series has a high overload capacity, a high level of electrical insulation between primary and secondary circuits and a rapid response rate. Lightweight and compact, and with no restriction on input current waveform, the sensors are often ideal for variable speed drives, power supplies, feedback control systems, robotics/welding equipment and general overcurrent protection.

**Sensed current type:** ac or dc
**EMC:** EN 50082-2, EN 50081-2
**Accuracy:** <0.5 %
**Housing material:** UL94-V0

## CSN Series Magnetoresistive (MR) Current Sensor

The CSN Series MR Current Sensor builds on patented Honeywell technology to offer superior sensor performance and accuracy in current measuring applications. There is virtually no offset drift over the entire operating temperature range. The sensor operates from a +5 V unipolar supply and has an accessible, internal 2.5 V voltage reference. The sensor can operate from either the internal voltage reference or an external voltage reference, thus enabling several sensors to be used without offset imbalance.

**Mounting:** PCB on 11 pins
**Accuracy:** ±0.32 % @ -40 °C to 85 °C [-40 °F to 185 °F]
**Thermal drift of offset current:** < ±10 uA @ -40 °C to 85 °C [-40 °F to 185 °F]
**Internal reference voltage:** +2.5 Vdc

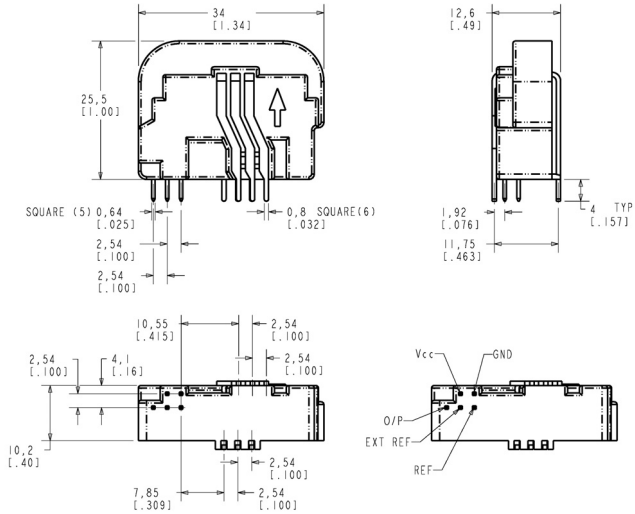


| SENSED CURRENT RANGE | COIL TURNS | SUPPLY VOLTAGE | REFERENCE |
|---|---|---|---|
| ±56 A | 2000 (50 Ohm coil) | +5 Vdc | CSNX25 |

# CSN Series (continued)

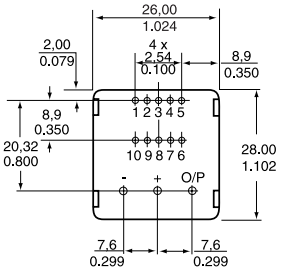


## Multi turn PCB mounted

**Mounting:** PCB on 13 pins

| SENSED CURRENT RANGE | COIL TURNS | SUPPLY VOLTAGE | REFERENCE |
|---|---|---|---|
| ±36 A | 1000 (110 Ohm coil) | ±15 Vdc | CSNE151 |

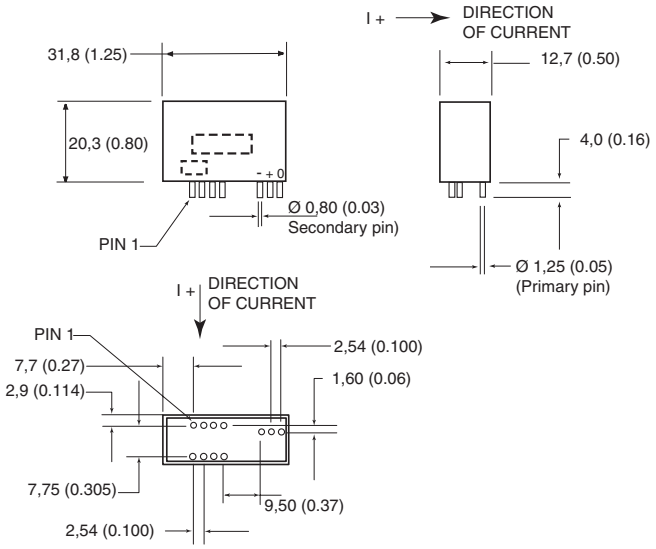


**Mounting:** PCB on 11 pins

| SENSED CURRENT RANGE | NOMINAL CURRENT | COIL TURNS | SUPPLY VOLTAGE | REFERENCE |
|---|---|---|---|---|
| ±90 A | 25 A | 1000 (66 Ohm coil) | ±12 Vdc to 15 Vdc | CSNE151-100 |
| ±90 A | 50 A | 1000 (66 Ohm coil) | ±12 Vdc to 15 Vdc | CSNE151-200 |

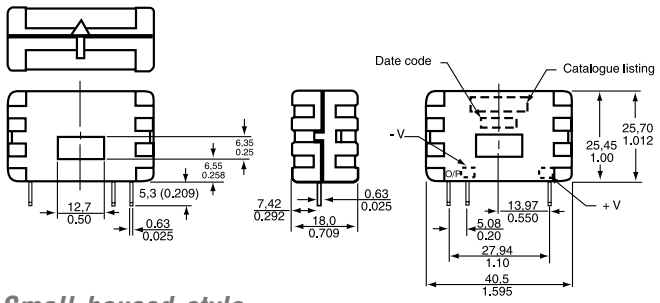


## Small housed style

**Mounting:** PCB on 3 pins

| SENSED CURRENT RANGE | COIL TURNS | SUPPLY VOLTAGE | REFERENCE |
|---|---|---|---|
| ±70 A | 1000 (90 Ohm coil) | ±15 Vdc | CSNA111 |
| ±90 A | 1000 (50 Ohm coil) | ±13 Vdc | CSNC241 |
| ±100 A | 2000 (160 Ohm coil) | ±15 Vdc | CSNB121 |
| ±100 A | 2000 (130 Ohm coil) | ±15Vdc | CSNB131 |

## Small housed family

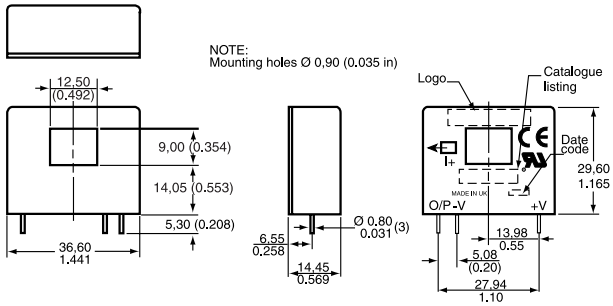


## Pinout style 'A'

**Mounting:** PCB on 3 pins

| SENSED CURRENT RANGE | COIL TURNS | SUPPLY VOLTAGE | REFERENCE |
|---|---|---|---|
| ±90 A | 1000 (30 Ohm coil) | ±12 Vdc to ±15 Vdc | CSNP661 |
| ±150 A | 2000 (100 Ohm coil) | ±12 Vdc to ±15 Vdc | CSNT651 |
| ±180 A | 2000 (100 Ohm coil) | ±15 Vdc | CSNG251 |

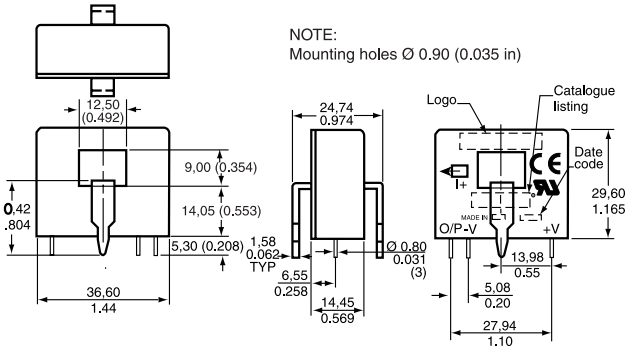


| SENSED CURRENT RANGE | COIL TURNS | SUPPLY VOLTAGE | REFERENCE |
|---|---|---|---|
| ±90 A | 1000 (30 Ohm coil) | ±12 Vdc to ±15 Vdc | CSNP661-002 |
| ±150 A | 2000 (100 Ohm coil) | ±12 Vdc to ±15 Vdc | CSNT651-001 |

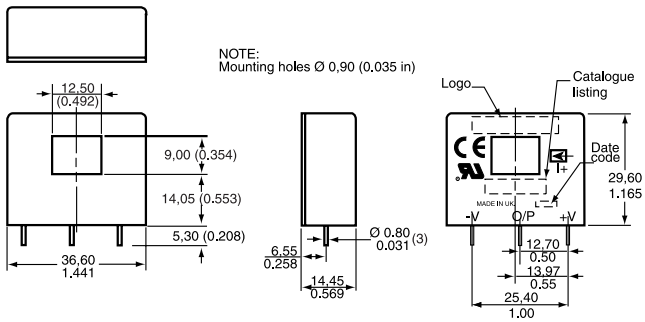


## Pinout style 'B'

| SENSED CURRENT RANGE | COIL TURNS | SUPPLY VOLTAGE | REFERENCE |
|---|---|---|---|
| ±150 A | 1000 (30 Ohm coil) | ±12 to ±15 Vdc | CSNF161 |
| ±180 A | 2000 (100 Ohm coil) | ±12 to ±15 Vdc | CSNF151 |
| ±200 A | 2000 (100 Ohm coil) | ±12 to ±15 Vdc | CSNR151 |
| ±200 A | 1000 (30 Ohm coil) | ±12 to ±15 Vdc | CSNR161 |

## Small housed family (continued)

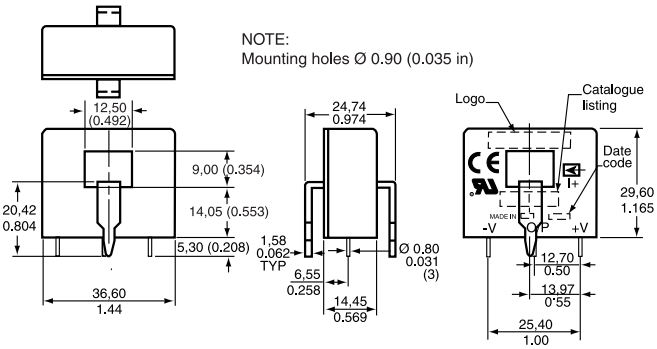


| SENSED CURRENT RANGE | COIL TURNS | SUPPLY VOLTAGE | REFERENCE |
|---|---|---|---|
| ±150 A | 1000 (30 Ohm coil) | ±12 Vdc to ±15 Vdc | CSNF161-002 |
| ±200 A | 2000 (100 Ohm coil) | ±12 Vdc to ±15 Vdc | CSNR151-002 |
| ±200 A | 1000 (30 Ohm coil) | ±12 Vdc to ±15 Vdc | CSNR161-002 |

# CSNS Series Closed Loop Current Sensors

The CSNS Series closed loop current sensor offers a flexible solution for measuring currents up to ±600 A. These small sensors have a large primary through hole to accept either a cable or a variety of busbar sizes. The sensors can be mounted vertically or horizontally and come with connection options of integral Molex type connector or a flying lead. The sensors are closed loop devices and based on the principle of Hall effect and null balance method. The output from the current sensor is the balancing current that is the perfect image of the primary current reduced by the number of secondary turns at any time. The current can be expressed as a voltage by passing it through a load resistor.

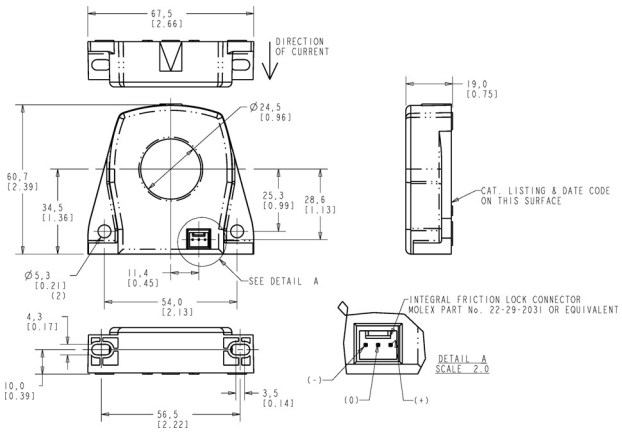


## Mid-range housed style

**Mounting:** Panel (see order guide)
**Sensed current range:** ±600 A
**Coil turns:** 2000 (31 Ohm coil)
**Supply voltage:** ±12 Vdc to ±18 Vdc

| CONNECTOR | REFERENCE |
|---|---|
| Integral Molex type connector (3 pin) | CSNS300M |
| Integral Molex type connector (4 pin), fully encapsulated | CSNS300M-001 |
| Flying lead and amp-type connector | CSNS300F |

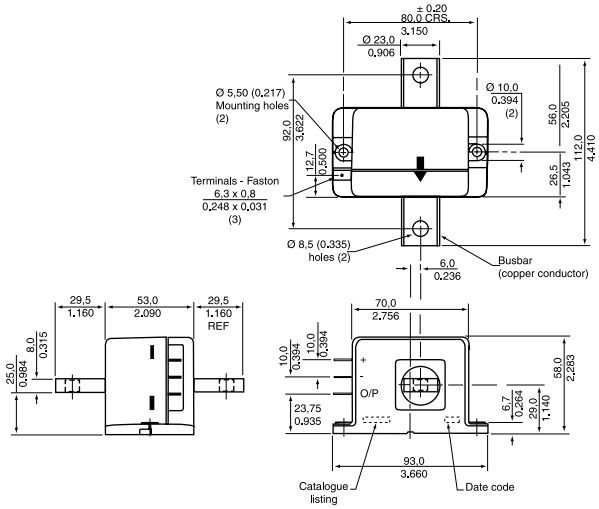


**Mounting:** Panel, spade terminals x 3

| SENSED CURRENT RANGE | COIL TURNS | SUPPLY VOLTAGE | REFERENCE |
|---|---|---|---|
| ±600 A | 2000 (25 Ohm coil) | ±12 Vdc to ±18 Vdc | CSNJ481 |
| ±600 A (busbar) | 2000 (25 Ohm coil) | ±12 Vdc to ±18 Vdc | CSNJ481-001 |

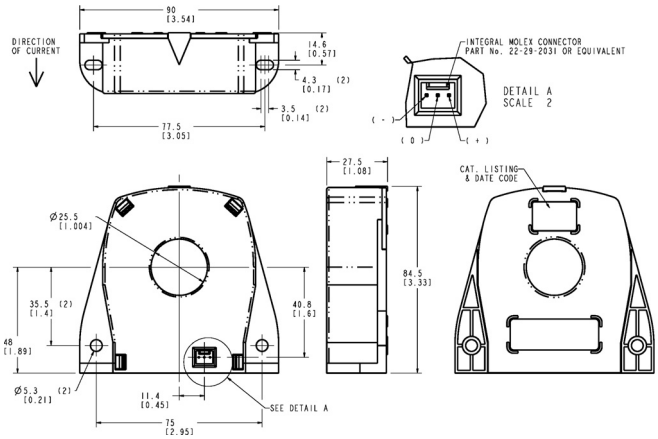


## Large-housed style

**Mounting:** Panel (see order guide)
**Sensed current range:** ±1200 A
**Coil turns:** 5000 (50 Ohm coil)
**Supply voltage:** ±12 Vdc to ±18 Vdc

| CONNECTOR | REFERENCE |
|---|---|
| 3 pin Molex | CSNK500M |
| 4 pin Molex | CSNK500M-001 |

## CSNS Series (continued)

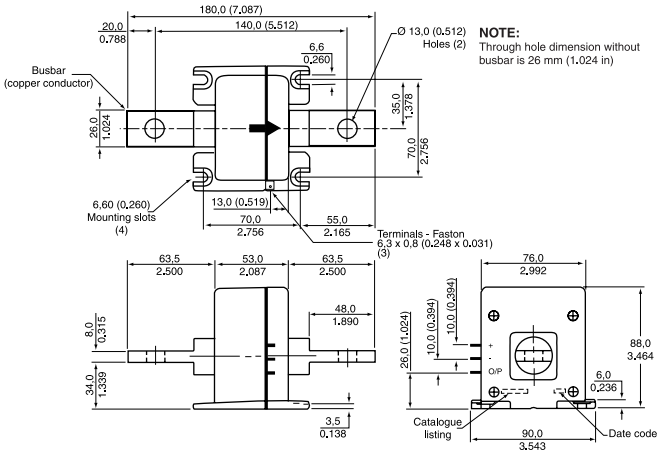


**Mounting:** Panel, spade terminals x 3

| SENSED CURRENT RANGE | COIL TURNS | SUPPLY VOLTAGE | REFERENCE |
|---|---|---|---|
| ±1200 A | 5000 (50 Ohm coil) | ±15 to ±24 Vdc | CSNK591 |
| ±1200 A (busbar) | 5000 (50 Ohm coil) | ±15 to ±24 Vdc | CSNK591-001 |

## Open Loop Current Sensors

## CSL Series Linear Current Sensors

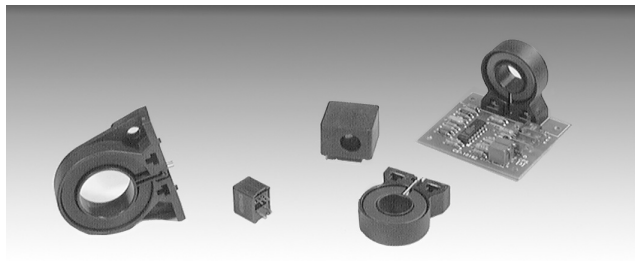

CSL Series linear current sensors incorporate our 91SS12-2 and SS94A1 linear output Hall-effect transducer (LOHET™). These sensors cover measuring ranges from 0 A to 950 A. The sensing element is assembled in a printed circuit board mountable housing. This housing is available in four configurations. Normal mounting is with 0.375 in long 4-40 screw and square nut (not provided) inserted in the housing or a 6-20 self-tapping screw. The combination of the sensor, flux collector and housing comprises the holder assembly. These sensors are ratiometric.

**Sensed current type:** ac or dc
**Housing:** PBT polyester

### *OPTIONS*

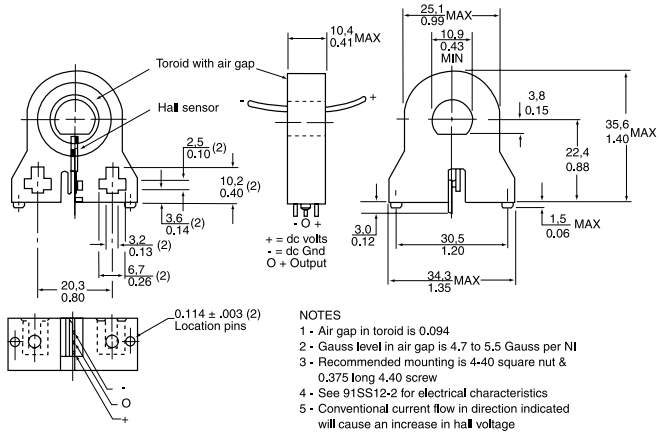


### *PCB bottom mount*

| SENSED CURRENT RANGE | SUPPLY VOLTAGE | REFERENCE |
|---|---|---|
| 0 A to 75 A | 8 Vdc to 16 Vdc | CSLA1DE |
| 0 A to 92 A | 6 Vdc to 12 Vdc | CSLA2DE |
| 0 A to 150 A | 6 Vdc to 12 Vdc | CSLA2DG |
| 0 A to 225 A | 8 Vdc to 16 Vdc | CSLA1DJ |
| 0 A to 225 A | 6 Vdc to 12 Vdc | CSLA2DJ |
| 0 A to 325 A | 8 Vdc to 16 Vdc | CSLA1DK |
| 0 A to 400 A | 6 Vdc to 12 Vdc | CSLA2DK |

# CSL Series (continued)

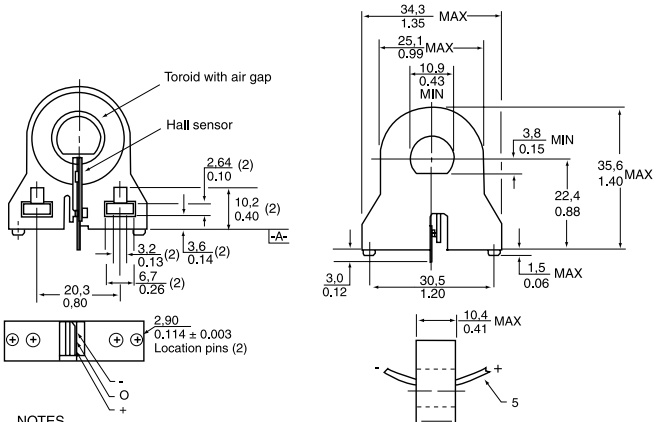


NOTES
1 - Air gap in toroid is 1,90 (0.075)
2 - Gauss level in air gap is 6.0 to 7.0 Gauss per NI
3 - Recommended mounting is 4-40 square nut & 0.375 long 4.40 screw
4 - See 91SS12-2 for electrical characteristics
5 - Conventional current flow in direction indicated will cause an increase in hall voltage

## PCB bottom mount

| SENSED CURRENT RANGE | SUPPLY VOLTAGE | REFERENCE |
|---|---|---|
| 0 A to 57 A | 8 Vdc to 16 Vdc | CSLA1CD |
| 0 A to 72 A | 6 Vdc to 12 Vdc | CSLA2CD |
| 0 A to 100 A | 8 Vdc to 16 Vdc | CSLA1CF |
| 0 A to 150 A | 8 Vdc to 16 Vdc | CSLA1CH |

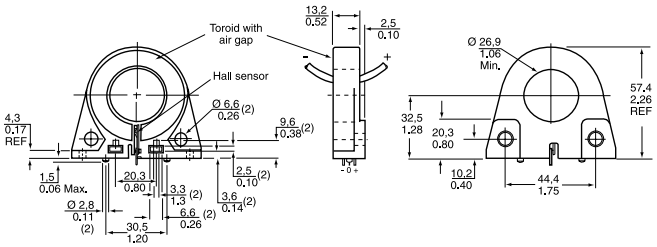


## PCB bottom mount

| SENSED CURRENT RANGE | SUPPLY VOLTAGE | REFERENCE |
|---|---|---|
| 0 A to 310 A | 6 Vdc to 12 Vdc | CSLA2EJ |
| 0 A to 550 A | 6 Vdc to 12 Vdc | CSLA2EL |
| 0 A to 625 A | 8 Vdc to 16 Vdc | CSLA1EL |
| 0 A to 765 A | 6 Vdc to 12 Vdc | CSLA2EM |
| 0 A to 950 A | 6 Vdc to 12 Vdc | CSLA2EN |

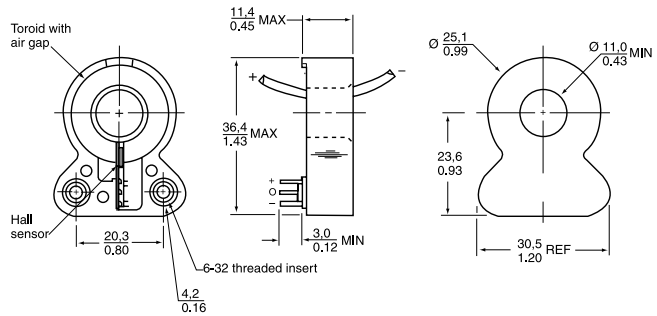


## PCB side mount

| SENSED CURRENT RANGE | SUPPLY VOLTAGE | REFERENCE |
|---|---|---|
| 0 A to 57 A | 8 Vdc to 16 Vdc | CSLA1GD |
| 0 A to 72 A | 6 Vdc to 12 Vdc | CSLA2GD |

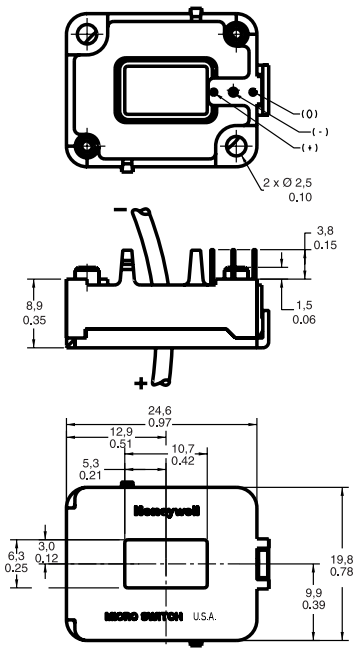


## PCB side mount - low cost

| SENSED CURRENT RANGE | SUPPLY VOLTAGE | REFERENCE |
|---|---|---|
| ±45 A | 4.5 to 10.5 Vdc | CSLH3A45 |

# CSD Series Digital Current Sensor

Each Honeywell CS Series digital current sensor provides a logic-level output that changes from approximately Vsupply to 0.5 Vdc when the sensed current exceeds the operate point. Each digital sensor will sense ac or dc current, but when sensing ac current, the output will turn off at every zero crossing. Maximum current limited only by conductor size.

**Housing:** PET polyester
**Operating temperature:** -25 °C to 85 °C [-13 °F to 185 °F]

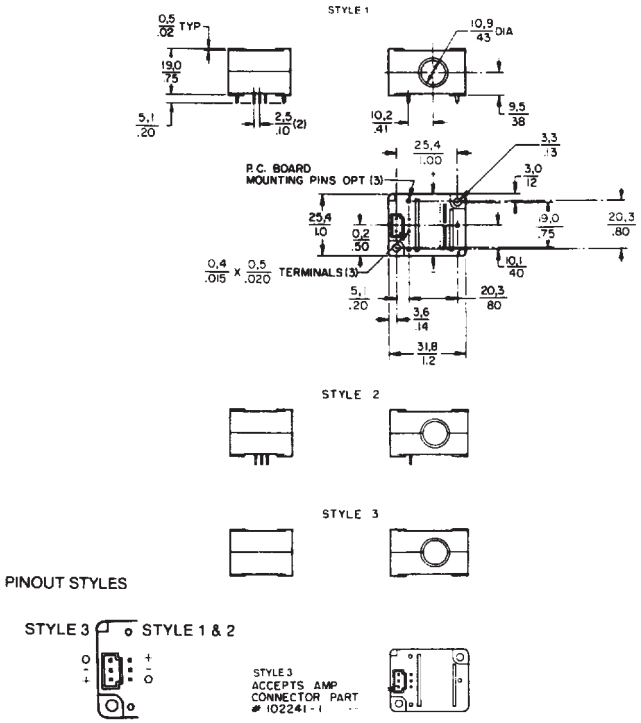


## PCB bottom mount

| OPERATE CURRENT | SUPPLY VOLTAGE | PACKAGE STYLE | REFERENCE |
|---|---|---|---|
| 0.5 A.t nominal* | 6 Vdc to 16 Vdc | 1 | CSDA1AA |
| 0.5 A.t nominal | 6 Vdc to 16 Vdc | 2 | CSDA1BA |
| 0.5 A.t nominal | 6 Vdc to 16 Vdc | 3 | CSDA1DA |
| 3.5 A.t nominal | 6 Vdc to 16 Vdc | 1 | CSDA1AC |
| 3.5 A.t nominal | 6 Vdc to 16 Vdc | 2 | CSDA1BC |
| 3.5 A.t nominal | 6 Vdc to 16 Vdc | 3 | CSDA1DC |
| 0.5 A.t nominal | 5 Vdc ±0.2 Vdc | 1 | CSDC1AA |
| 0.5 A.t nominal | 5 Vdc ±0.2 Vdc | 2 | CSDC1BA |
| 0.5 A.t nominal | 5 Vdc ±0.2 Vdc | 3 | CSDC1DA |
| 3.5 A.t nominal | 5 Vdc ±0.2 Vdc | 1 | CSDC1AC |
| 3.5 A.t nominal | 5 Vdc ±0.2 Vdc | 2 | CSDC1BC |
| 3.5 A.t nominal | 5 Vdc ±0.2 Vdc | 3 | CSDC1DC |

* A.t. = Amp turns

# Liquid Level Sensors

Honeywell Liquid Level Sensors incorporate a voltage level switch which provides a digital output that denotes the presence or absence of liquid.

The mode of operation is derived from the principle of total internal reflection. An LED and detector are housed within a plastic dome at the head of the device. When no liquid is present, all light from the LED is totally internally reflected from the dome boundary to the detector. When liquid covers the dome, the effective refractive index at the dome/liquid boundary changes, allowing some light from the LED to escape. Thus the amount of light received by the voltage level switch is reduced and the output switches, denoting the presence of liquid. This method of liquid level sensing is very fast and instantaneous for water.

**Principle - in air**

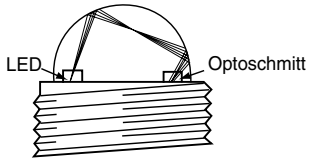


## LLE Series Enhanced Liquid Level Sensor

The LLE Series enhanced liquid level sensors use a phototransistor trigger which provides a digital output that denotes the presence or absence of liquid. This series incorporates reverse polarity, over voltage, short circuit and transient protection.

| | |
|---|---|
| **Termination:** | 250 mm lead wires |
| **Supply voltage:** | +5 Vdc to +12 Vdc |
| **Pressure range:** | 0 bar to 5 bar (plastic housing)<br>0 bar to 25 bar (metal housing) |
| **Operating temperature:** | -25 °C to 80 °C [-13 °F to 176 °F]<br>-40 °C to 125 °C [-40 °F to 257 °F] (high) |
| **Storage temperature:** | -30 °C to 85 °C [-22 °F to 185 °F] |
| **Seal washer:** | Vamac® or Nitrile rubber<br>(Plastic, threaded options only) |
| **Output function:** | High in air |

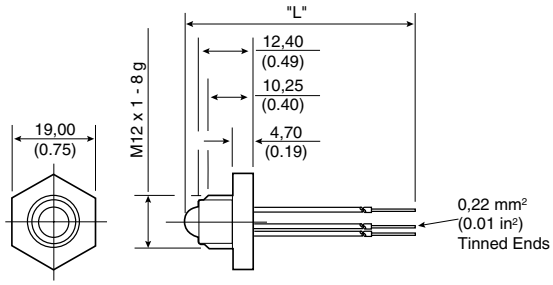


### *Screw-in, M12 thread, plastic - Type 1*

| | SEAL WASHER | REFERENCE |
|---|---|---|
| | Nitrile rubber | LLE101000 |
| High temperature | Vamac® | LLE101101 |

### *Wiring diagram*

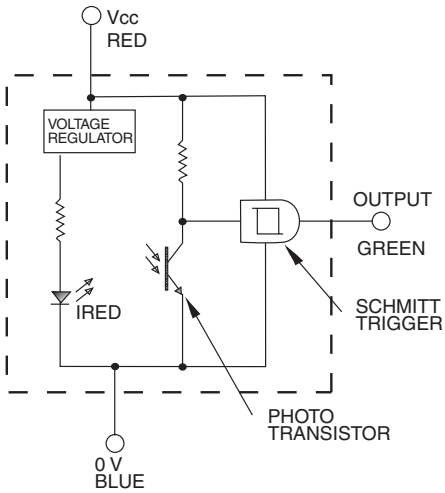


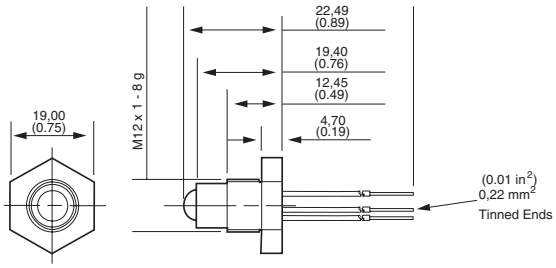


### *Type 2*

| | SEAL WASHER | REFERENCE |
|---|---|---|
| | Nitrile rubber | LLE102000 |
| High temperature | Vamac® | LLE102101 |

## LLE Series (continued)

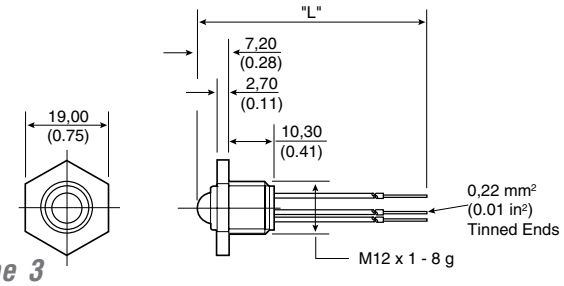


### *Type 3*

| | SEAL WASHER | REFERENCE |
|---|---|---|
| | Nitrile rubber | LLE103000 |
| High temperature | Vamac® | LLE103101 |

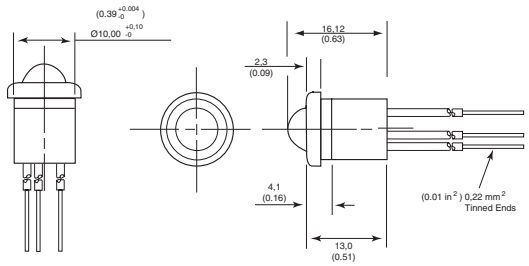


### *Push-in, plastic - Type 5*

| | REFERENCE |
|---|---|
| | LLE105000 |
| High temperature | LLE105100 |

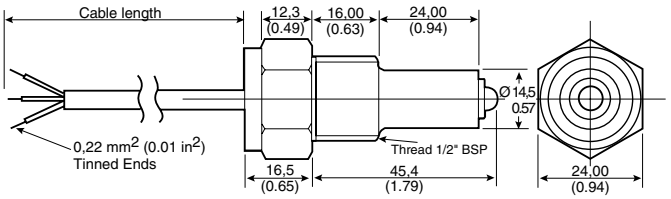


### *Screw-in, 0.5 in, metal*

| | REFERENCE |
|---|---|
| Nickel-plated brass | LLE205000 |
| Stainless steel | LLE305000 |

## LLN Series Industrial Liquid Level Sensors

The LLN Series industrial liquid level sensors are designed for many harsh industrial environments with extremes in temperature, pressure, vibration and shock. The LLN Series has reverse polarity and overvoltage protection. Housed in stainless-steel, the LLN Series has long life and is easy to clean. The LLN Series terminates using industry standard quick-connect connectors.

### *Wiring diagram*

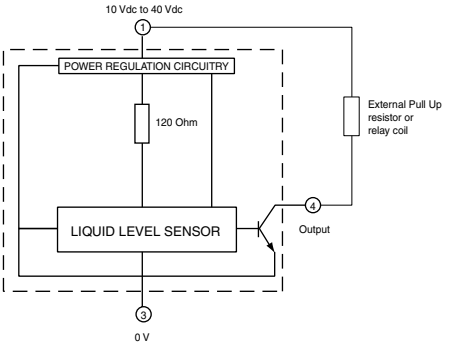


| | |
|---|---|
| **Housing material:** | Stainless steel |
| **Sealing:** | IP67 |
| **Termination:** | 3 pin Lumberg/Brad Harrison type connector |
| **Supply voltage:** | 10 Vdc to 40 Vdc |
| **Pressure range:** | 0 bar to 25 bar |
| **Operating temperature:** | -40 °C to 125 °C [-40 °F to 257 °F] |
| **Storage temperature:** | -50 °C to 150 °C [-58 °F to 302 °F] |

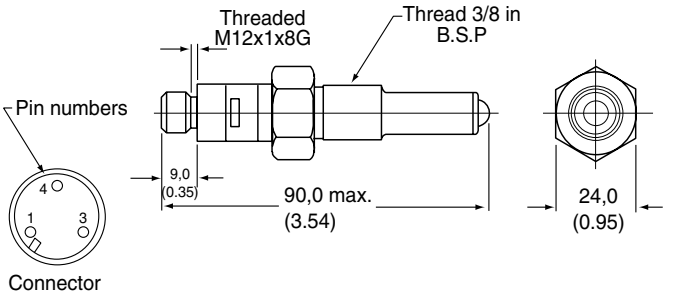


| OUTPUT TYPE | REFERENCE |
|---|---|
| High in air | LLN8651721 |
| Low in air | LLN8651722 |

# Basic Switches

These listings include standard size basics, miniature and subminiature switches. The precision snap-action mechanisms are offered with a wide variety of actuators and operating characteristics. Basic switches are often ideal for applications requiring compactness, light weight, accurate repeatability and long life.

They are best used for presence/absence detection where physical contact with object is permissible. Very economical.

## BZ/BA/BM/BE Series Basic Switches

BZ/BA/BM/BE Series standard basic switches are used for simple or precision on/off application needs.

As well as the catalogue listings presented here, we offer other versions with higher temperature ratings, different termination options, different electrical ratings and Single Pole, Single Throw (SPST) circuitry. Refer to our Web site for details.

| | |
|---|---|
| **Voltage:** | 250 Vac |
| **Electrical rating:** | up to 25 A |
| **Operating temperature:** | -55 °C to 85 °C [-67 ° F to 185 °F] |
| **Termination:** | Screw |
| **Contact type:** | Silver |
| **Approvals:** | CE, CSA, UL, ENEC |
| **Switching options:** | Single pole, double throw (SPDT) |

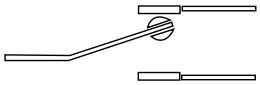

## *OPTIONS*

***Note:*** *BA/BE plunger position distance from mounting hole = 19 mm [0.75 in]*

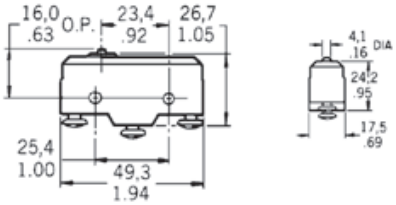


### *Top pin plunger*

| **Approvals:** | BE-2R-A4 | CSA, UL |
|---|---|---|
| **ELECTRICAL RATING** | **TERMINATION** | **REFERENCE** |
| 15 A | Solder | BZ-R |
| 15 A | Screw | BZ-R-A2 |
| 15 A | Solder | BZ-R169 |
| 15 A | Screw | BZ-2R-A2 |
| 25 A | Screw | BE-2R-A4 |

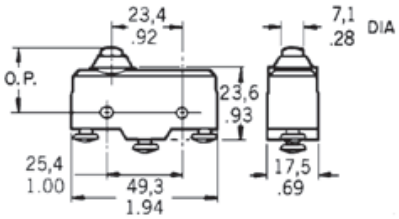


### *Overtravel plunger (standard)*

| **ELECTRICAL RATING** | **TERMINATION** | **REFERENCE** |
|---|---|---|
| 15 A | Screw | BZ-2RD-A2 |
| 20 A | Screw | BA-2RB-A2 |

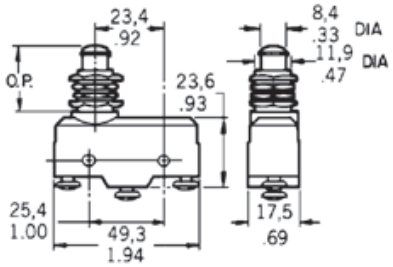


### *Panel mount overtravel plunger*

| **ELECTRICAL RATING** | **TERMINATION** | **REFERENCE** |
|---|---|---|
| 15 A | Screw | BZ-2RQ1-A2 |
| 20 A | Screw | BA-2RQ1-A2 |

# BZ/BA/BM/BE Series (continued)

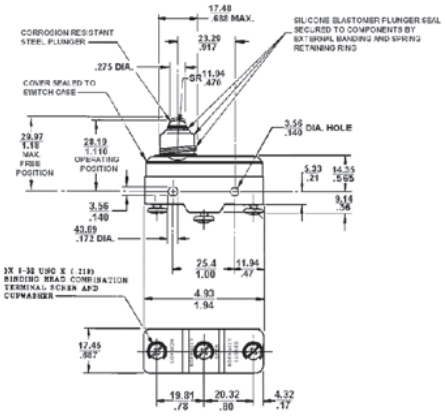


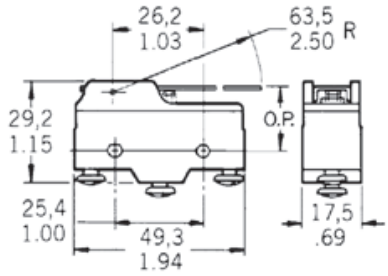


## Overtravel plunger (splash resistant)

| ELECTRICAL RATING | TERMINATION | REFERENCE |
|---|---|---|
| 15 A | Screw | BZ-2RDS-A2 |
| 15 A (Stainless steel spring) | Screw | BZ-2RDS-A2S |

## Straight lever

| ELECTRICAL RATING | TERMINATION | LEVER RADIUS | REFERENCE |
|---|---|---|---|
| 20 A | Screw | 63,5 mm [2.5 in] | BA-2RV-A2 |
| 15 A | Screw | 63,5 mm [2.5 in] | BZ-2RW80-A2 |
| 15 A | Screw | 152,4 mm [6.0 in] | BZ-2RW863-A2 |

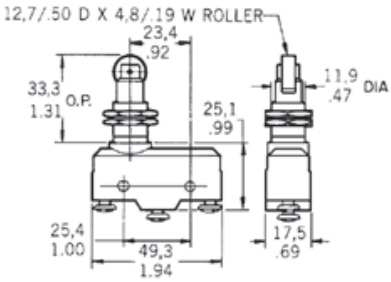


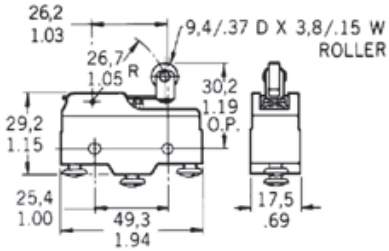


## Overtravel roller plunger

| ELECTRICAL RATING | TERMINATION | REFERENCE |
|---|---|---|
| 15 A | Screw | BZ-2RQ18-A2 |

## Roller lever

| ELECTRICAL RATING | TERMINATION | LEVER RADIUS | REFERENCE |
|---|---|---|---|
| 15 A | Screw | 26,67 mm [1.05 in] | BZ-2RW822-A2 |
| 15 A | Solder | 26,67 mm [1.05 in] | BZ-2RW822 |
| 15 A (Splash resistant) | Screw | 26,67 mm [1.05 in] | BZ-2RW8225551-A2 |
| 15 A | Screw | One way, 32,0 mm [1.26 in] | BZ-2RW826-A2 |
| 15 A | Screw | 48,3 mm [1.9 in] | BZ-2RW82-A2 |

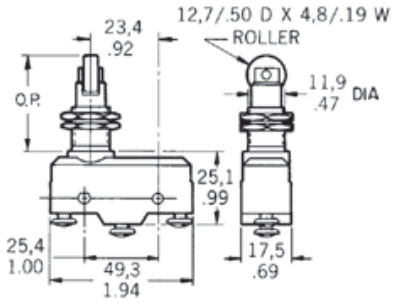


## Overtravel roller plunger, perpendicular

| ELECTRICAL RATING | APPROVALS | REFERENCE |
|---|---|---|
| 15 A | Screw | BZ-2RQ181-A2 |

## DT Series Basic Switches

DT Series standard basic switches consist of two independent single-pole double throw circuits in one housing actuated by one actuator. The terminals are separated by a non-conductive shield to reduce shorting.

**Voltage:** 250 Vac
**Electrical rating:** 10 A
**Operating temperature:** -55 °C to 85 °C [-67 ° F to 185 °F]
**Termination:** Screw
**Contact type:** Silver
**Approvals:** CSA, UL
**Switching options:** Double pole, double throw (DPDT)

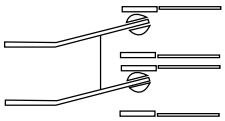

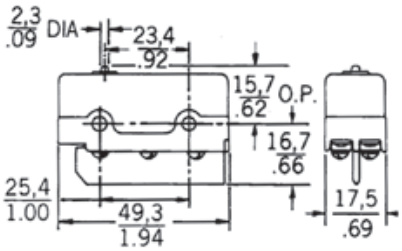


### *Top pin plunger*

| ELECTRICAL RATING | TERMINATION | REFERENCE |
|---|---|---|
| 10 A | Screw | DT-2R-A7 |

## Basic Switch Accessories

A range of accessories is available for BZ, BA, BM, BE and DT switches, such as the 5PA2 terminal enclosure. For more information please contact your local sales office.

## TB Series Miniature Double-break Basic Switches

TB Series miniature double-break basic switches are basic double-break units that offer a means of controlling isolated circuits. Each circuit may be driven by an independent voltage source.

**Voltage:** 250 Vac
**Electrical rating:** 10 A
**Operating temperature:** -55 °C to 125 °C [-67 ° F to 257 °F]
**Termination:** Solder
**Contact type:** Silver
**Approvals:** CSA, UL
**Switching options:** Single pole, double throw, double break (SPDT DB)

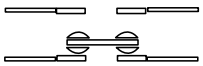

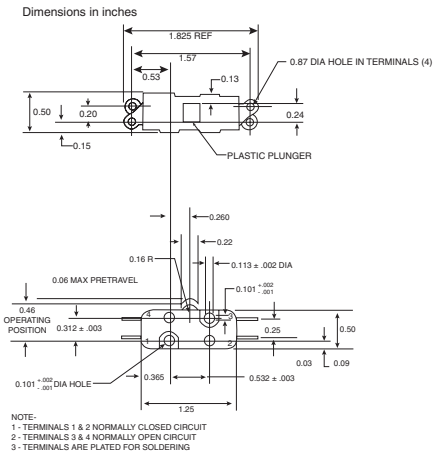


### *Top pin plunger*

| ELECTRICAL RATING | TERMINATION | REFERENCE |
|---|---|---|
| 10 A | Solder | 1TB1-2 |

# SM and SX Series Subminiature Basic Switches

SM and SX Series subminiature basic switches are used for simple or precision on/off application needs. These switches combine small size and light weight with ample electrical capacity, precision operation and long life. The SX Series are small, precision, snap-action switches that are often ideal where savings in space and weight are important.

**Voltage:** 250 Vac
**Operating temperature:** -55 °C to 125 °C [-67 ° F to 257 °F]
**Termination:** Solder
**Contact type:** Silver
**Switching options:** Single pole, double throw (SPDT)

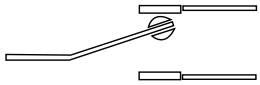

## SM Series

**Approvals:** CE, CSA, UL
**Electrical rating:** 5 A

### OPTIONS

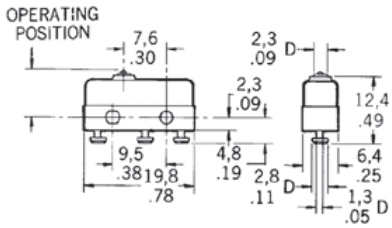


### Top pin plunger

Approvals: 11SM601-H4 UL, CSA

| TERMINATION | ELECTRICAL RATING | CONTACT TYPE | REFERENCE |
|---|---|---|---|
| | 5 A | silver | 11SM1 |
| Solder/quick connect | 5 A | silver | 11SM601-H4 |

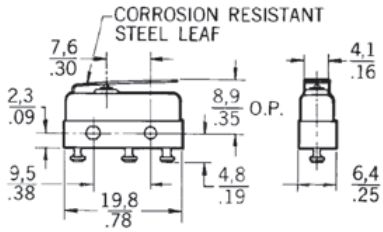


### Straight lever

| LEVER LENGTH | ELECTRICAL RATING | CONTACT TYPE | REFERENCE |
|---|---|---|---|
| 4,83 mm | 5 A | silver | 111SM1 |

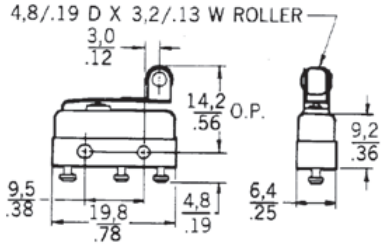


### Roller lever

| TERMINATION | ELECTRICAL RATING | CONTACT TYPE | REFERENCE |
|---|---|---|---|
| Solder/quick connect | 5 A | silver | 111SM2-T |

## SX Series

**Approvals:** CE, CSA, UL
**Electrical rating:** 5 A

### OPTIONS

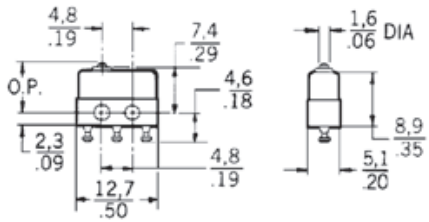


### Top pin plunger

Approvals: 6SX7-T UL, CSA

| CONTACTS | ELECTRICAL RATING | REFERENCE |
|---|---|---|
| Silver | 7 A | 1SX1-T |
| Silver | 3 A | 11SX1-T |
| Gold | 1 A | 6SX7-T |

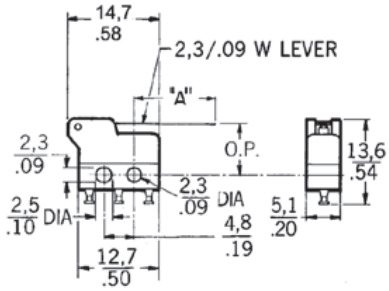


### Straight lever

| CONTACT TYPE | ELECTRICAL RATING | LEVER LENGTH | REFERENCE |
|---|---|---|---|
| Silver | 5 A | 'A' 12,8 mm | 311SX2-T |
| Silver | 5 A | 'A' 24,5 mm | 311SX3-T |

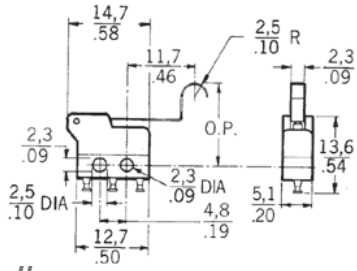


### Simulated roller

| CONTACT TYPE | ELECTRICAL RATING | LEVER | REFERENCE |
|---|---|---|---|
| Silver | 5 A | Roller | 311SX5-T |

# ZM, ZX, ZV and ZW Series Subminiature Basic Switches

ZM, ZX, ZV and ZW Series subminiature basic switches are cost-effective devices used for simple on/off applications. These switches combine small size and light weight with ample electrical capability and long life. Plastic lever capability is available on the ZV Series.

**Electrical rating:** 0.1 A, 3 A, 5 A or 10.1 A
**Voltage:** 125/250 Vac
**Operating temperature:** 25 °C to 85 °C [-13 °F to 185 °F]
**Termination:** Quick connect, solder, PCB
**Contact type:** Gold or silver
**Switching options:** SPDT

## ZM Series

**Approvals:** UL/CSA
**Electrical rating:** 0.1 A, 5 A or 10.1 A

### *OPTIONS*

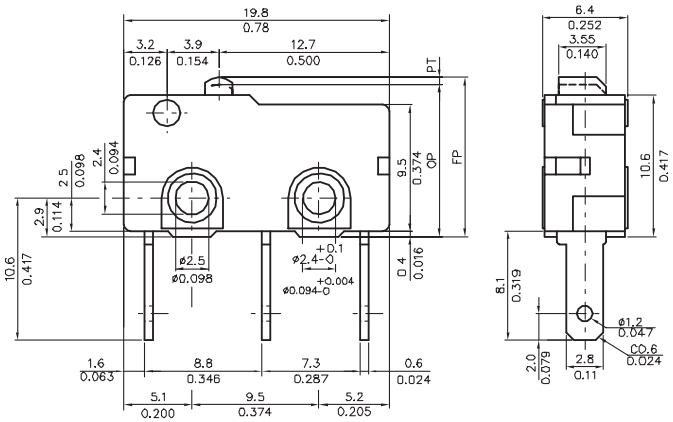


### *Top pin plunger*

| TERMINATION | ELECTRICAL RATING | CONTACT TYPE | REFERENCE |
|---|---|---|---|
| Quick connect | 5 A | silver | ZM50E70A01 |
| Solder | 5 A | silver | ZM50E10A01 |
| PCB | 10.1 A | silver | ZM90G20A01 |
| Solder | 0.1 A | gold | ZM10B10A01 |

## ZX Series

**Approvals:** UL/CSA
**Electrical rating:** 0.1 A or 3 A

### *OPTIONS*

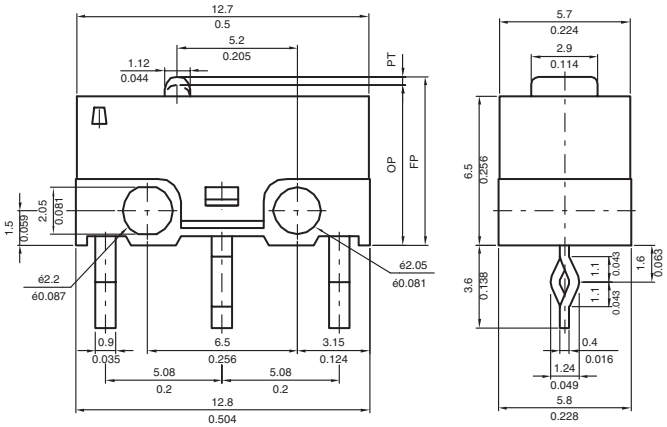


### *Top pin plunger*

| TERMINATION | ELECTRICAL RATING | CONTACT TYPE | REFERENCE |
|---|---|---|---|
| PCB | 3 A | silver | ZX40E30A01 |
| Solder | 0.1 A | gold | ZX10C10A01 |

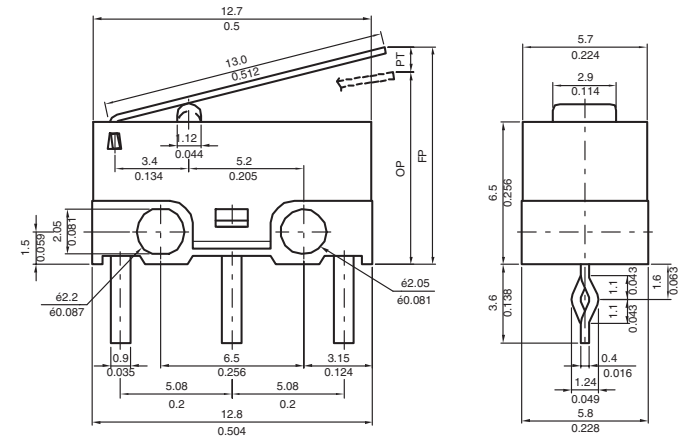


### *Straight lever*

| TERMINATION | ELECTRICAL RATING | CONTACT TYPE | REFERENCE |
|---|---|---|---|
| PCB | 3 A | silver | ZX40E30C01 |
| Solder | 3 A | silver | ZX40E10C01 |

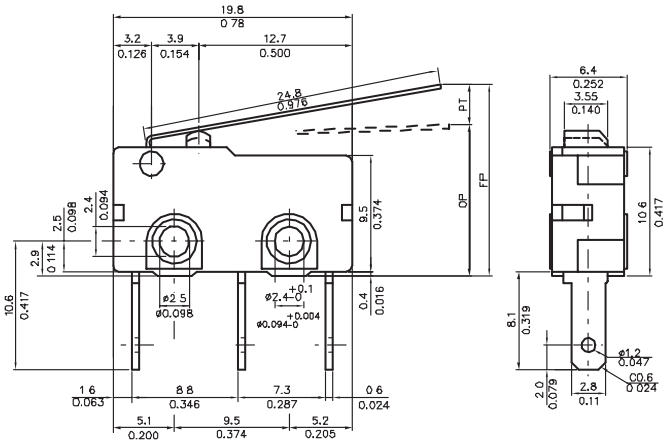


## Straight lever

| TERMINATION | ELECTRICAL RATING | CONTACT TYPE | REFERENCE |
|---|---|---|---|
| Quick connect | 5 A | silver | ZM50E70D01 |
| Solder | 5 A | silver | ZM50E10D01 |

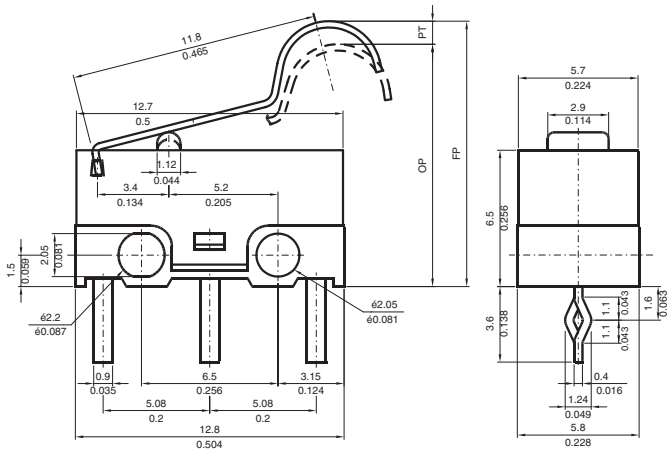


## Simulated roller lever

| TERMINATION | ELECTRICAL RATING | CONTACT TYPE | REFERENCE |
|---|---|---|---|
| PCB | 3 A | silver | ZX40E30E01 |
| Solder | 3 A | silver | ZX40E10E01 |

# ZV Series

**Approvals:** UL/ENEC
**Electrical rating:** 0.1 A, 5 A or 10.1 A

## OPTIONS

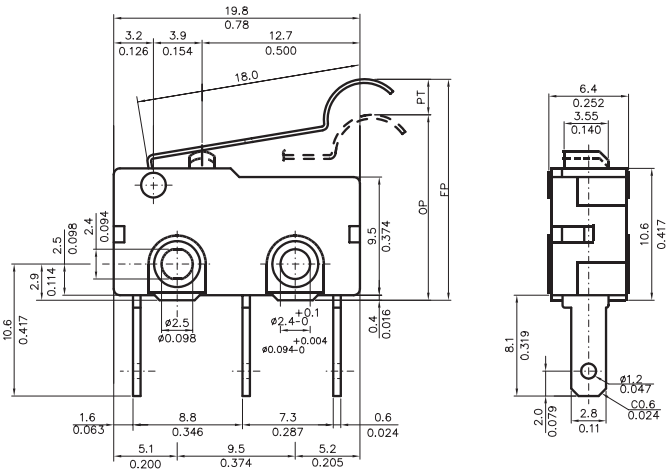


## Simulated roller lever

| TERMINATION | ELECTRICAL RATING | CONTACT TYPE | REFERENCE |
|---|---|---|---|
| Quick connect | 5 A | silver | ZM50E70E01 |
| Solder | 5 A | silver | ZM50E10E01 |

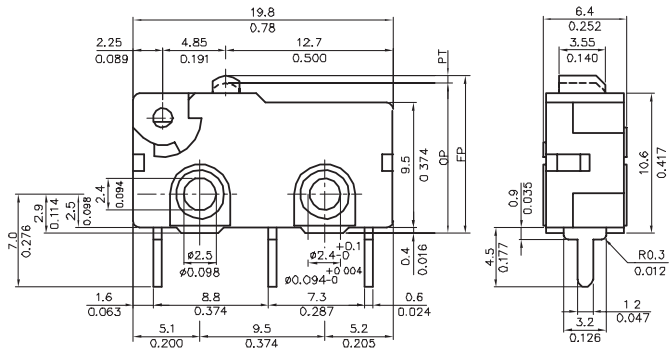


## Top pin plunger

| TERMINATION | ELECTRICAL RATING | CONTACT TYPE | REFERENCE |
|---|---|---|---|
| PCB | 5 A | silver | ZV50E20A01 |
| Solder | 5 A | silver | ZV50E10A01 |
| Quick connect | 0.1 A | gold | ZV10B70A01 |

# ZW Sealed Series

**Approvals:** UL/ENEC
**Electrical rating:** 0.1 A or 5 A
**Sealing:** IP50 and IP67

## OPTIONS

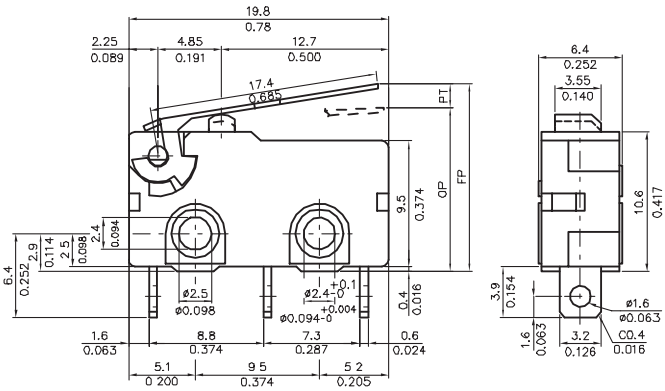

### Straight lever

| TERMINATION | ELECTRICAL RATING | CONTACT TYPE | REFERENCE |
|---|---|---|---|
| Solder | 5 A | silver | ZV50E10B01 |
| Quick connect | 5 A | silver | ZV50E70C01 |

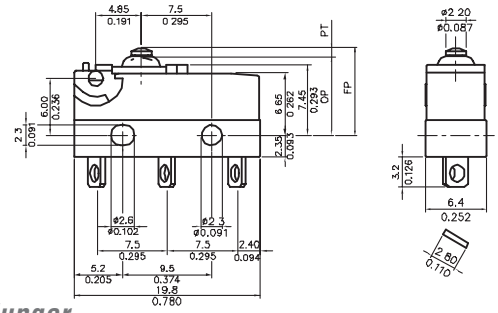

### Top pin plunger

| TERMINATION | ELECTRICAL RATING | CONTACT TYPE | REFERENCE |
|---|---|---|---|
| Solder | 5 A | silver | ZW50F15AD1 |

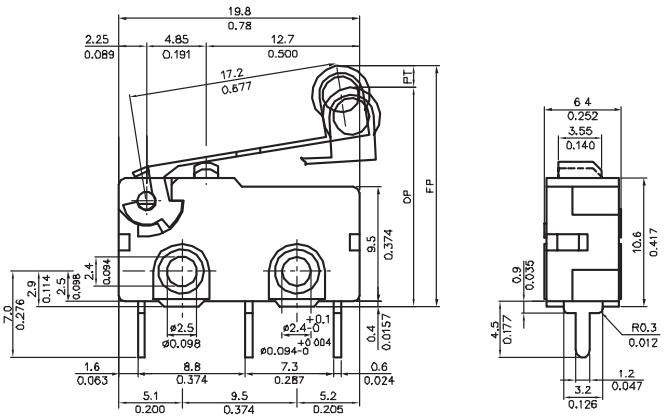

### Roller lever

| TERMINATION | ELECTRICAL RATING | CONTACT TYPE | REFERENCE |
|---|---|---|---|
| PCB | 5 A | silver | ZV50E20F01 |
| Quick connect | 5 A | silver | ZV50E70F01 |

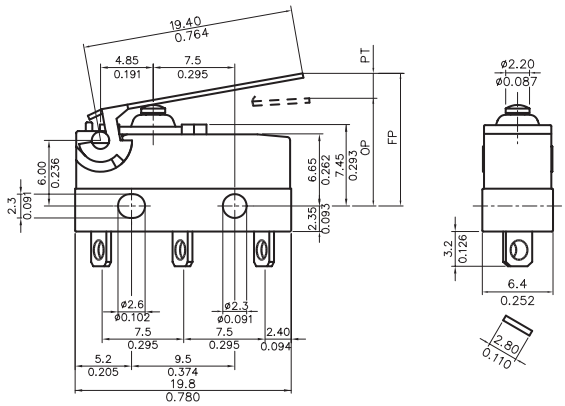

### Straight lever

| TERMINATION | ELECTRICAL RATING | CONTACT TYPE | REFERENCE |
|---|---|---|---|
| Solder | 0.1 A | gold | ZW10E15CD1 |

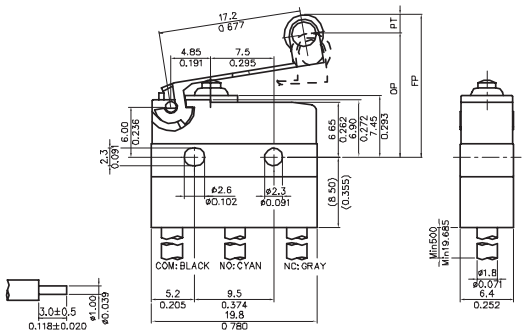


### Roller lever

| TERMINATION | ELECTRICAL RATING | CONTACT TYPE | REFERENCE |
|---|---|---|---|
| Wire leads | 0.1 A | gold | ZW10E90FW1 |

# V5 Series Miniature Basic Switches

V5 Series basic switches are used for simple or precision on/off, end of limit, presence/absence, pressure, temperature and manual operator interface application needs.

**Voltage:** 250 Vac
**Operating temperature:**
-55 °C to 85 °C [-67 °F to 185 °F] (standard)
-55 °C to 150 °C [-67 °F to 302 °F] (high temperature)
**Termination:** 6,3 mm x 0,8 mm quick connect (QC)
**Contact type:** Silver/silver cadmium oxide
**Electrical rating:** 20 A (V5A)
16 A (V5B/P/R)
10 A (V5C/D)
22 A (V5S)
**Switching options:** SPDT
Single pole double throw (SPDT)
Single pole single throw (SPST) (NO and NC)

## OPTIONS

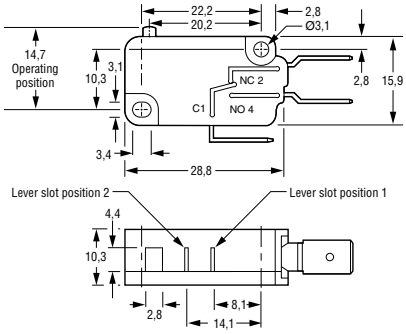


### Top pin plunger

| APPROVALS | | REFERENCE |
|---|---|---|
| CE, ENEC | | V5A010CB |
| CE, CSA, ENEC, UL | | V5B010CB3 |
| CE, CSA, UL | 4,8 mm x 0,5 mm QC | V5B010FB3 |
| CE, ENEC | Solder terminals | V5B010TB |
| CE, ENEC | High temperature | V5B210CB |
| CE, ENEC | | V5C010BB |
| CE, CSA, ENEC, UL | 4,8 mm x 0,5 mm QC | V5C010EB3 |
| CE, CSA, ENEC, UL | Solder terminals | V5C010TB3 |
| CE, ENEC | | V5P010CB |

| APPROVALS | SWITCHING OPTIONS | REFERENCE |
|---|---|---|
| CE, ENEC | SPNO | V5D030BB |
| CE, ENEC | SPNO | V5R030CB |
| CE, BEAB | SPNC | V5S020CB |
| CE, BEAB | SPNO | V5S030CB |

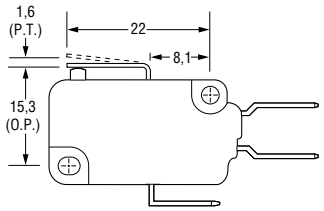


### Straight lever - Type B

| APPROVALS | REFERENCE |
|---|---|
| CE, CSA, ENEC, UL | V5C010BB3B |

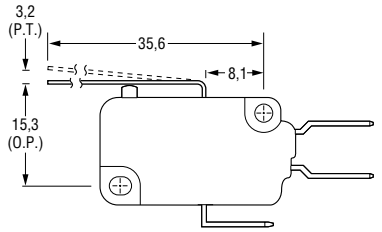


### Type C

| APPROVALS | | REFERENCE |
|---|---|---|
| CE, ENEC | High temperature | V5B210CB1C |

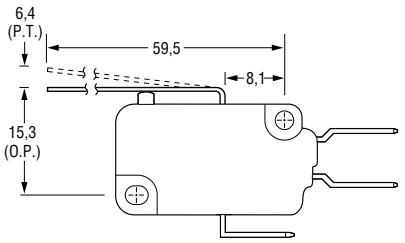


### Type G

| APPROVALS | REFERENCE |
|---|---|
| CE, ENEC | V5C010BB1G |

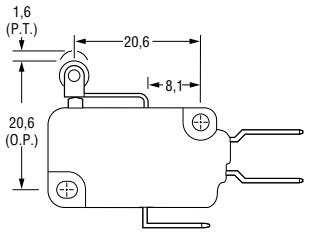


### Roller lever - Type D

| APPROVALS | | REFERENCE |
|---|---|---|
| CE, CSA, ENEC, UL | High temperature | V5B210CB3D |
| CE, CSA, ENEC, UL | | V5C010BB3D |

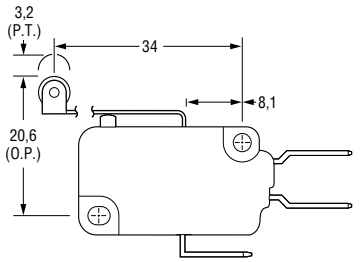


### Type E

| APPROVALS | | REFERENCE |
|---|---|---|
| CE, CSA, ENEC, UL | Lever position 2 | V5A010CB4E |
| CE, ENEC | High temperature | V5B210CB1E |

# V7 Series Miniature Basic Switches

V7 Series basic switches are used for simple or precision on/off, end of limit, presence/absence, pressure, temperature and manual operator interface application needs.

**Operating temperature:**
-40 °C to 82 °C [-40 °F to 180 °F] (standard)
-40 °C to 200 °C [-40 °F to 350 °F] (high temperature)

**Termination:** Printed circuit board (PCB) and two types of quick connect (QC)
D8, E8: 4,8 mm x 0.5 mm [0.187 in x 0.02 in]
E9: 6,35 mm x 0,80 mm [0.25 in x 0.032 in]

| | Electrical rating | Contact Type |
|---|---|---|
| V7-*A | 5 A | Silver |
| V7-*B | 11 A | Silver |
| V7-*C/W | 15 A | Silver |
| V7-*D | 1 A | Gold alloy |
| V7-*E | 10 A | Silver |
| V7-*S | 100 mA | Gold alloy |
| V7-*V | 21 A | Silver alloy |
| V7-*Z | 25 A | Silver cadmium oxide |

**Approvals:** CSA, UL, ENEC
V7-*C/W (Electrical ratings) CSA, UL

**Switching options:** Single pole double throw (NO and NC) (SPDT)

## AVAILABLE TERMINALS

### Quick Connect (QC)

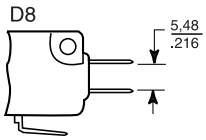


**0.187 in wide x 0.020 in thick**. D8 terminals are European approved when used with electrical ratings A, B, D, E or S. International approval agencies require that switches with these terminals have insulated receptacles or connector.

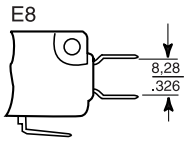


**0.187 in wide x 0.020 in thick.** E8 terminals are European approved when used with electrical ratings A, B, D, E or S.

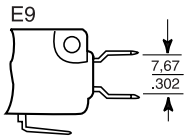


**0.250 in wide x 0.032 in thick.** E9 terminals are European approved when used with electrical ratings A, B, D, E, S, V or Z.

### Printed circuit board (PO2)

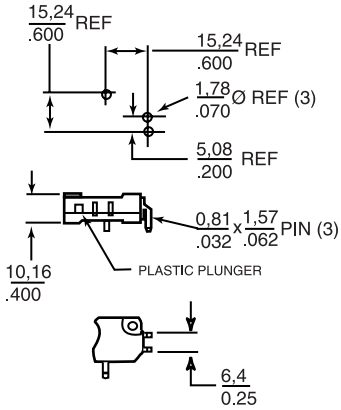


These terminals interface with snap-on receptacles and other components from AMPMODU interconnection system.

PCB terminals are European approved when used with electrical ratings A, B, D, E, S.

## ACTUATION OPTIONS

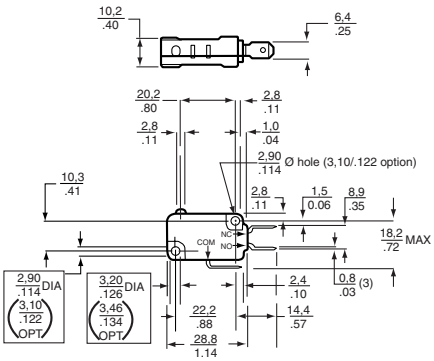


***Note:*** *The optional mounting hole dimensions shown above are standard on V5/V7 International Series switches.*

### Top pin plunger

| CURRENT | TERMINATION | REFERENCE |
|---|---|---|
| 5 A | QC (D8) | V7-1A17D8 |
| 5 A | PCB | V7-1A17P02 |
| 11 A | QC (D8) | V7-1B17D8 |
| 11 A | QC (E9) | V7-1B19E9 |
| 15 A | QC (D8) | V7-1C17D8 |
| 15 A | QC (E9) | V7-1C17E9 |
| 1 A | QC (D8) | V7-1D10D8 |
| 0.1 A | QC (D8) | V7-1S17D8 |
| 21 A | QC (E9) | V7-1V19E9 |
| 25 A | QC (E9) | V7-1Z19E9 |

# V7 Series Miniature Basic Switches (continued)

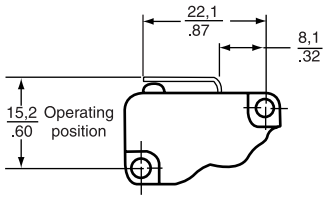


*Straight lever*

## Type -002

| ELECTRICAL RATING | TERMINATION | REFERENCE |
|---|---|---|
| 15 A | QC (D8) | V7-1C17D8-002 |
| 15 A | QC (E9) | V7-1C17E9-002 |
| 11 A | QC (E9) | V7-2B17E9-002 |

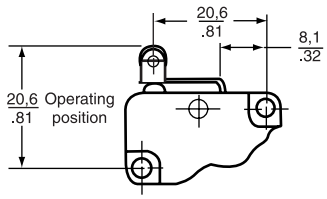


*Roller lever*

## Type -201

| ELECTRICAL RATING | TERMINATION | REFERENCE |
|---|---|---|
| 15 A | QC (D8) | V7-1C17D8-201 |
| 15 A | QC (E9) | V7-1C17E9-201 |
| 0.1 A | QC (D8) | V7-1S17D8-201 |
| 11 A | QC (D8) | V7-2B17D8-201 |

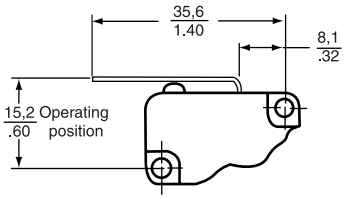


*Straight lever*

## Type -022

| ELECTRICAL RATING | TERMINATION | REFERENCE |
|---|---|---|
| 5 A | QC (D8) | V7-1A17D8-022 |
| 11 A | QC (D8) | V7-1B19D8-022 |
| 15 A | QC (D8) | V7-1C17D8-022 |
| 0.1 A | QC (D8) | V7-1S17D8-022 |

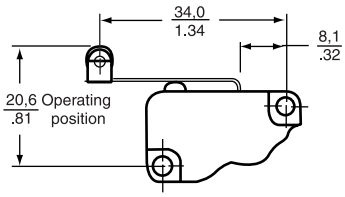


## Type -207

| ELECTRICAL RATING | TERMINATION | REFERENCE |
|---|---|---|
| 11 A | QC (E9) | V7-1B10E9-207 |
| 15 A | QC (D8) | V7-1C17D8-207 |
| 15 A | QC (E9) | V7-1C17E9-207 |
| 0.1 A | QC (D8) | V7-1S17D8-207 |
| 21 A | QC (E9) | V7-1V1939-207 |
| 5 A | QC (D8) | V7-2A17D8-207 |
| 1 A | QC (D8) | V7-7D17D8-207 |

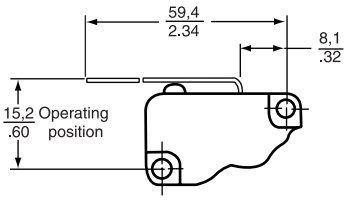


## Type -048

| ELECTRICAL RATING | TERMINATION | REFERENCE |
|---|---|---|
| 11 A | QC(D8) | V7-1B17D8-048 |
| 15 A | QC(D8) | V7-1C17D8-048 |
| 21 A | QC(E9) | V7-1V19E9-048 |
| 11 A | QC(E9) | V7-2B19E9-048 |
| 0.1 A | QC(D8) | V7-3S17D8-048 |
| 15 A (High temperature) | QC(E9) | V7-9W1AE9-048 |

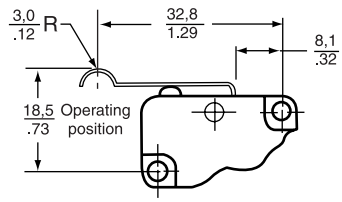


*Simulated roller lever*

## Type -263

| ELECTRICAL RATING | TERMINATION | REFERENCE |
|---|---|---|
| 11 A | QC (D8) | V7-1B17D8-263 |
| 15 A | QC (D8) | V7-1C17D8-263 |
| 0.1 A | QC (D8) | V7-1S17D8-263 |
| 0.1 A | QC (E9) | V7-3S17E9-263 |

# Turbidity Sensors

Turbidity sensing provides a quick, practical indication of the relative amount of solids suspended in water or liquids. Conductivity sensing gives a relative measurement of the ionic concentration of a given liquid.

Turbidity sensors can provide inputs to the control algorithms of dishwashers and clothes washers. Many industrial and commercial bath applications may make use of integrated turbidity and conductivity sensing to improve product quality, minimize ingredient consumptions and reduce waste water discharge.

| | |
|---|---|
| **Package style:** | Tank mount |
| **Operating temperature:** | 20 °C to 60 °C [68 °F to 140 °F] |

## APMS-10 Series

The APMS-10 wash process sensor application kit includes the sensor, PC interface and the software required to apply the Honeywell wash process sensor in bath or other wet applications. Once installed, the kit enables the user to begin taking measurements of water quality. To run the wash process application, the user must supply a PC that meets the specified hardware requirements and an 8 Vdc to 30 Vdc power supply. Wash process sensors provide an integrated package of a microprocessor and sensing functions that measures turbidity, conductivity and/or temperature. Information from the sensor may be used in an adaptive control scheme to monitor and control the application process to help improve process quality and minimize consumption of energy, water, materials and time. Each of the sensing functions is conditioned by the internal microprocessor. All data transmitted to the host system is supplied by the microprocessor via a 5 Vdc custom communications protocol. The sensor operates in slave mode, waiting for the host system to request sensor information.

| | |
|---|---|
| **Supply voltage:** | 8 Vdc to 30 Vdc |
| **Ratio range:** | 0 NTU to 4000 NTU |
| **Output type:** | RS-232 Serial link, slave mode |

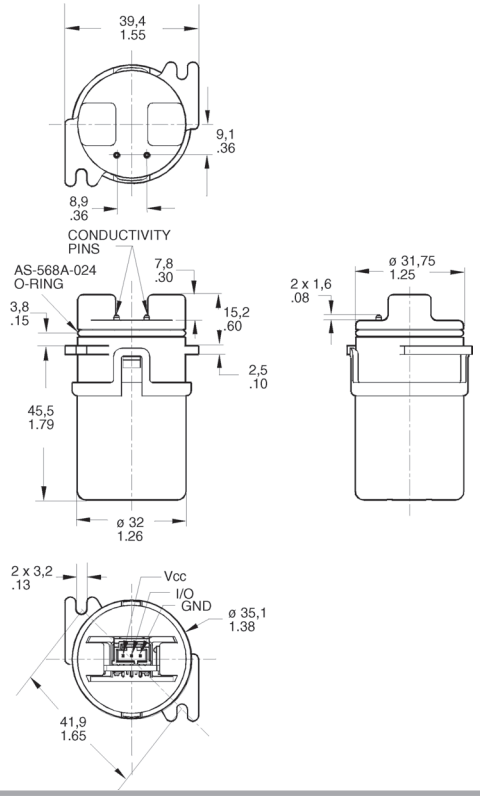


APMS-10 Kit specifications

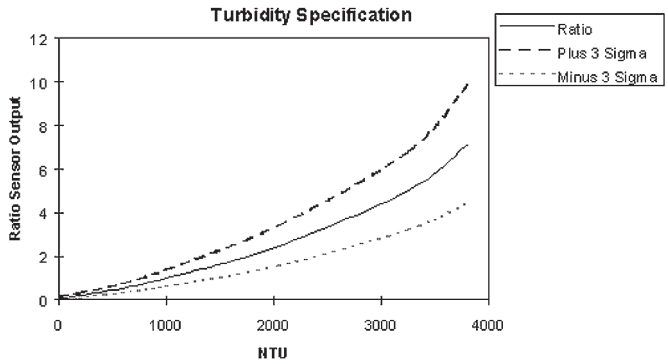


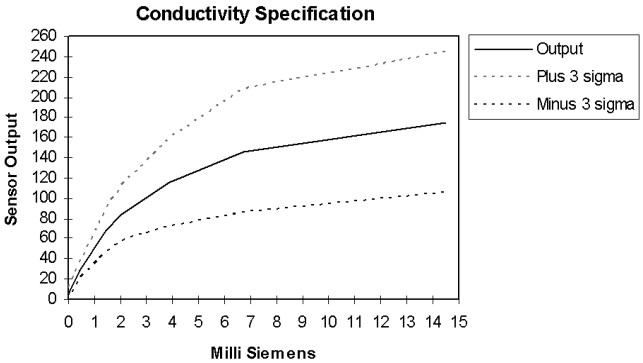


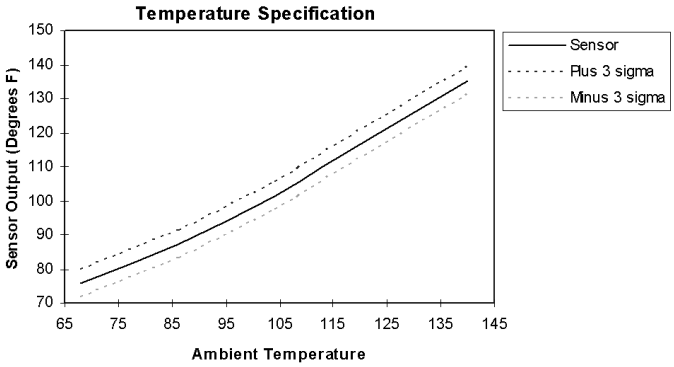


**REFERENCE**
APMS-10GRCF-KIT

## APMS-11 Series

The Low NTU turbidity sensor application kit includes the sensor and installation instructions to apply the sensor in a bath or other wet applications. Once installed, the sensor enables the user to measure the relative amount of particulate in solution. To run the application, the user must supply a 5 Vdc power supply that meets the specified tolerance and solicits analog output from the output pin of the device. Low NTU turbidity sensors provide an integrated package of optic devices, amplification and trim potentiometer capability. This sensor may be used in an adaptive control scheme to monitor and control the wash process to help improve process quality and minimize consumption of energy, water, materials and time.

| | |
|---|---|
| **Supply voltage:** | 4.9 Vdc to 5.1 Vdc |
| **Ratio range:** | 0 NTU to 600 NTU |
| **Output type:** | 0 Vdc to 5 Vdc analog |

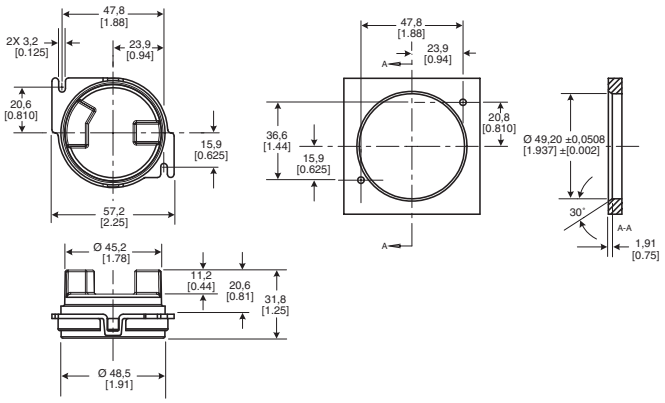


**REFERENCE**
APMS-11GRCF-KIT

APMS-11 Kit - Typical output curve between 0 NTU and 600 NTU

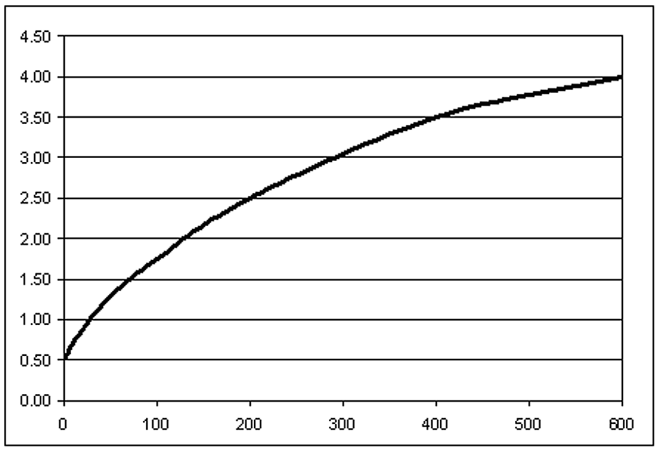


Scatter turbidity sensor operation

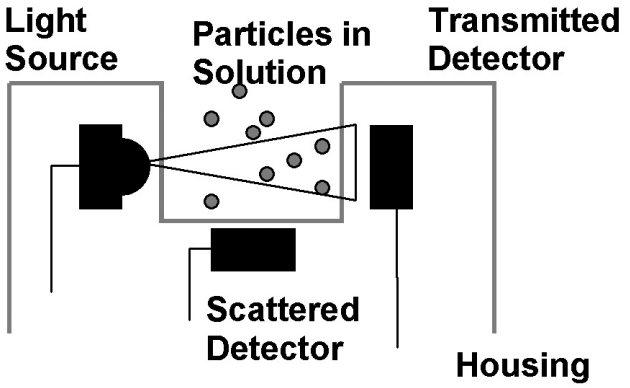


Typical output curve between 0 NTU and 200 NTU

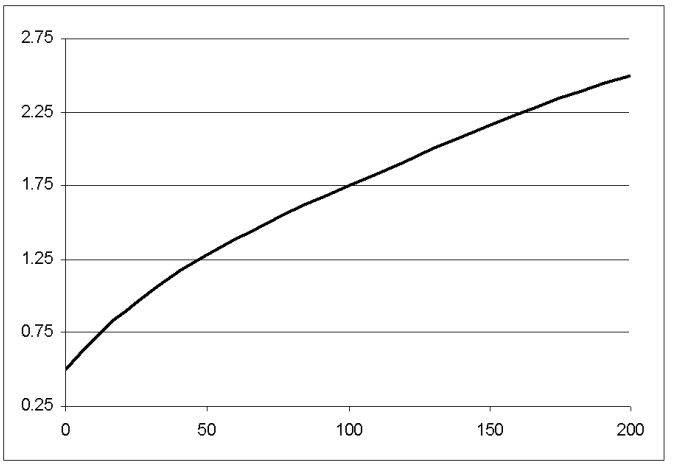

# Index


103SR13A-1 ..... 72
103SR14A-1 ..... 72
103SR17A-1 ..... 72
103SR18A-1 ..... 72
103SR19A-1 ..... 72
111-103EAJ-H01 ..... 25
111-104HAK-H01 ..... 25
111-202CAK-B01 ..... 25
111-202CAK-H01 ..... 25
111-303EAK-B01 ..... 25
111-802EAJ-B01 ..... 25
111-802EAJ-H01 ..... 25
111SM1 ..... 92
111SM2-T ..... 92
112-102EAJ-B01 ..... 24
112-103FAJ-B01 ..... 24
112-103FAJ-H01 ..... 24
112-104KAJ-B01 ..... 24
112-104KAJ-H01 ..... 24
112-105PAJ-B01 ..... 24
112-201BAJ-B01 ..... 24
112-202EAJ-B01 ..... 24
112-202EAJ-H01 ..... 24
112-203HAJ-B01 ..... 24
112-204KAJ-B01 ..... 24
112-502EAJ-B01 ..... 24
112-502EAJ-H01 ..... 24
112-503JAJ-B01 ..... 24
112-504NAJ-B01 ..... 24
112-604NAJ-H01 ..... 24
115-202CDK-801 ..... 26
115-802EDJ-801 ..... 26
11SM1 ..... 92
11SM601-H4 ..... 92
11SX1-T ..... 92
120-102EAJ-Q01 ..... 25
120-103FAJ-Q01 ..... 25
120-104KAJ-Q01 ..... 25
120-202EAJ-Q01 ..... 25
120-502JAJ-Q01 ..... 25
121-102EAJ-Q01 ..... 25
121-103FAJ-Q01 ..... 25
121-104KAJ-Q01 ..... 25
121-105PAJ-Q01 ..... 25
121-106QAJ-Q01 ..... 25
121-202EAJ-Q01 ..... 25
121-202KAJ-Q01 ..... 25
121-502EAJ-Q01 ..... 25
121-502JAJ-Q01 ..... 25
121-504NAJ-Q01 ..... 25
135-102DAG-J01 ..... 21
135-103FAF-J01 ..... 21
135-103FAG-J01 ..... 21
135-103LAF-J01 ..... 21
135-103LFW-J01 ..... 21
135-104LAF-J01 ..... 21
135-104LAG-J01 ..... 21
135-104LFW-J01 ..... 21
135-105QAG-J01 ..... 21
135-202FAG-J01 ..... 21
135-203LAG-J01 ..... 21
135-203LFW-J01 ..... 21
135-204QAG-J01 ..... 21
135-302FAG-J01 ..... 21
135-303KAG-J01 ..... 21
135-303LFW-J01 ..... 21
135-502FAF-J01 ..... 21
135-502FAG-J01 ..... 21
135-503LAF-J01 ..... 21
135-503LAG-J01 ..... 21
135-503LFW-J01 ..... 21
135-504QAG-J01 ..... 21
140-102FAG-RB1 ..... 23
140-103LAG-RB1 ..... 23
140-104QAG-RB1 ..... 23
140-302LAG-RB1 ..... 23
140-501FAG-RB1 ..... 23
140-502LAG-RB1 ..... 23
140-503QAG-RB1 ..... 23
141PC15G 10 ..... 11
142-102FAG-RB1 ..... 24
142-103LAG-RB1 ..... 24
142-104QAG-RB1 ..... 24
142-302LAG-RB1 ..... 24
142-501FAG-RB1 ..... 24
142-502LAG-RB1 ..... 24
142-503QAG-RB1 ..... 24
142PC01D ..... 10
142PC01G ..... 10
142PC02G ..... 10
142PC05D ..... 10
142PC05D97 ..... 10
142PC05G ..... 10
142PC15A ..... 10
142PC15AW95 ..... 10
142PC15G ..... 10
143-101FAG-RC1 ..... 23
143-102LAG-RC1 ..... 23
143-103QAG-RC1 ..... 23
143-201FAG-RC1 ..... 23
143-302LAG-RC1 ..... 23
143-303QAG-RC1 ..... 23
143-501FAG-RC1 ..... 23
143-502LAG-RC1 ..... 23
143-503QAG-RC1 ..... 23
143PC03D ..... 10
143PC05DW ..... 10
145-101FAG-RC1 ..... 24
145-102LAG-RC1 ..... 24
145-103QAG-RC1 ..... 24
145-201FAG-RC1 ..... 24
145-301FAG-RC1 ..... 24
145-302LAG-RC1 ..... 24
145-303QAG-RC1 ..... 24
145-501FAG-RC1 ..... 24
145-502LAG-RC1 ..... 24
145-503QAG-RC1 ..... 24
162PC01D ..... 10
163PC01D36 ..... 10
163PC01D48 ..... 10
163PC01D61 ..... 10
163PC01D75 ..... 10
164PC01D37 ..... 10
164PC01D76 ..... 10
1865-01G-K-N ..... 17
1865-01G-L-N ..... 17
1865-02G-K-N ..... 17
1865-02G-L-N ..... 17
1865-03G-K-N ..... 17
1865-03G-L-N ..... 17
1865-04G-K-N ..... 17
1865-04G-L-N ..... 17
1865-05G-K-N ..... 17
1865-05G-L-N ..... 17
192-102DET-A01 ..... 23
192-102DEV-A01 ..... 23
192-102DEW-A01 ..... 23
192-103LET-A01 ..... 23
192-103LEV-A01 ..... 23
192-103LEW-A01 ..... 23
192-104QET-A01 ..... 23
192-104QEV-A01 ..... 23
192-104QEW-A01 ..... 23
192-222LET-A01 ..... 23
192-222LEV-A01 ..... 23
192-222LEW-A01 ..... 23
192-302LET-A01 ..... 23
192-302LEV-A01 ..... 23
192-302LEW-A01 ..... 23
192-303KET-A01 ..... 23

192-303KEV-A01 ..... 23
192-303KEW-A01 ..... 23
192-303QET-A01 ..... 23
192-303QEV-A01 ..... 23
192-303QEW-A01 ..... 23
192-502LET-A01 ..... 23
192-502LEV-A01 ..... 23
192-502LEW-A01 ..... 23
192-503QET-A01 ..... 23
192-503QEV-A01 ..... 23
192-503QEW-A01 ..... 23
195-101CAG-A01 ..... 22
195-102DAG-A01 ..... 22
195-103LAG-A01 ..... 22
195-104QAG-A01 ..... 22
195-202LAG-A01 ..... 22
195-203LAG-A01 ..... 22
195-301CAG-A01 ..... 22
195-302LAG-A01 ..... 22
195-303KAG-A01 ..... 22
195-501DAG-A01 ..... 22
195-502LAG-A01 ..... 22
195-503QAG-A01 ..... 22
197-101CAG-A01 ..... 22
197-102DAG-A01 ..... 22
197-103LAG-A01 ..... 22
197-104QAG-A01 ..... 22
197-202LAG-A01 ..... 22
197-203LAG-A01 ..... 22
197-301CAG-A01 ..... 22
197-302LAG-A01 ..... 22
197-303KAG-A01 ..... 22
197-501DAG-A01 ..... 22
197-502LAG-A01 ..... 22
197-503QAG-A01 ..... 22
198-101CAG-A01 ..... 22
198-102DAG-A01 ..... 22
198-103LAG-A01 ..... 22
198-104QAG-A01 ..... 22
198-202LAG-A01 ..... 22
198-203LAG-A01 ..... 22
198-301CAG-A01 ..... 22
198-302LAG-A01 ..... 22
198-303KAG-A01 ..... 22
198-501DAG-A01 ..... 22
198-502LAG-A01 ..... 22
198-503QAG-A01 ..... 22
199-101CAG-A01 ..... 22
199-102DAG-A01 ..... 22
199-103LAG-A01 ..... 22
199-104QAG-A01 ..... 22
199-202LAG-A01 ..... 22
199-203LAG-A01 ..... 22
199-301CAG-A01 ..... 22
199-302LAG-A01 ..... 22
199-303KAG-A01 ..... 22
199-501DAG-A01 ..... 22
199-502LAG-A01 ..... 22
199-503QAG-A01 ..... 22
1SX1-T ..... 92
1TB1-2 ..... 91
24PC01SMT ..... 5
24PC05SMT ..... 5
24PC15SMT ..... 5
24PCAFA6G ..... 4
24PCBFA6D ..... 4
24PCBFA6G ..... 4
24PCCFA6D ..... 4
24PCCFA6G ..... 4
24PCCFG6G ..... 4
24PCDFA6D ..... 4
24PCDFA6G ..... 4
24PCDFG6G ..... 4
24PCEFA6D ..... 4
24PCEFA6G ..... 4
24PCFFA6D ..... 4
24PCFFA6G ..... 4
26PC01SMT ..... 5
26PC15SMT ..... 5
26PCAFA6D ..... 4
26PCAFA6G ..... 4
26PCAFG6G ..... 4
26PCBFA6D ..... 4
26PCBFA6G ..... 4
26PCCFA6D ..... 4
26PCCFA6G ..... 4
26PCCFG6G ..... 4
26PCDFA6D ..... 4
26PCDFA6G ..... 4
26PCDFG2G ..... 5
26PCFFA6G ..... 4
26PCFFG6G ..... 4
26PCFFU5G ..... 5
26PCGFA6D ..... 4
2SS52M ..... 71
2SS52M-S ..... 71
3100U-3-1431 ..... 33
3100U-3-1432 ..... 33
3100U-3-1433 ..... 33
3100U-3-1434 ..... 33
3100U-3-1435 ..... 33
3100U-3-1436 ..... 33
3100U-3-1437 ..... 33
3100U-3-1438 ..... 33
3100U-3-1439 ..... 33
3100U-3-1440 ..... 33
3100U-3-1441 ..... 33
3100U-3-1442 ..... 33
3100U-3-1443 ..... 33
3100U-3-1444 ..... 33
3100U-3-1445 ..... 33
3100U-3-1446 ..... 33
3100U-3-1447 ..... 33
3100U-3-1448 ..... 33
3100U-3-1449 ..... 33
3100U-3-1450 ..... 33
3100U-3-1451 ..... 33
3100U-3-1452 ..... 33
3100U-3-1453 ..... 33
3100U-3-1454 ..... 33
3100U-3-1455 ..... 33
3100U-3-1456 ..... 33
3100U-3-1457 ..... 33
3100U-3-1458 ..... 33
3100U-3-1459 ..... 33
3100U-3-1460 ..... 33
3100U-3-1461 ..... 33
3100U-3-1462 ..... 33
3100U-3-1463 ..... 33
3455RC-100-220 ..... 32
3455RC-100-221 ..... 32
3455RC-100-222 ..... 32
3455RC-100-223 ..... 32
3455RC-100-224 ..... 32
3455RC-100-225 ..... 32
3455RC-100-226 ..... 32
3455RC-100-227 ..... 32
3455RC-100-228 ..... 32
3455RC-100-229 ..... 32
3455RC-100-230 ..... 32
3455RC-100-231 ..... 32
3455RC-100-232 ..... 32
3455RC-100-233 ..... 32
3455RC-100-234 ..... 32
3455RC-100-235 ..... 32
3455RC-100-236 ..... 32
3455RC-100-237 ..... 32
3455RC-100-238 ..... 32
3455RC-100-239 ..... 32
3455RC-100-240 ..... 32
3455RC-100-241 ..... 32
3455RC-100-242 ..... 32
3455RC-100-243 ..... 32
3455RC-100-244 ..... 32
3455RC-100-245 ..... 32
3455RC-100-246 ..... 32

3455RC-100-247 ..... 32
3455RC-100-248 ..... 32
3455RC-100-249 ..... 32
3455RC-100-250 ..... 32
3455RC-100-251 ..... 32
3600040010001 ..... 33
3600045010001 ..... 33
3600050010001 ..... 33
3600055010001 ..... 33
3600060010001 ..... 33
3600065010001 ..... 33
3600070010001 ..... 33
3600075010001 ..... 33
3600080010001 ..... 33
3600085010001 ..... 33
3600090010001 ..... 33
3600095010001 ..... 33
3600100010001 ..... 33
3601040010001 ..... 33
3601045010001 ..... 33
3601050010001 ..... 33
3601055010001 ..... 33
3601060010001 ..... 33
3601065010001 ..... 33
3601070010001 ..... 33
3601075010001 ..... 33
3601080010001 ..... 33
3601085010001 ..... 33
3601090010001 ..... 33
3601095010001 ..... 33
3601100010001 ..... 33
40PC001B1A ..... 11
40PC006G1A ..... 11
40PC015G1A ..... 11
40PC015V1A ..... 11
40PC030G1A ..... 11
40PC100G1A ..... 11
40PC150G1A ..... 11
40PC250G1A ..... 11
40PC500G1A ..... 11
513SS16 ..... 71
517SS16 ..... 71
55SS13 ..... 71
613SS2 ..... 71
65SS4 ..... 71
6SX7-T ..... 92
APMS-10GRCF-KIT ..... 99
APMS-11GRCF-KIT ..... 100
ASDX001D44D-DO ..... 8
ASDX001D44R ..... 8
ASDX001G24R ..... 8
ASDX005D44R ..... 8
ASDX005G24R ..... 8
ASDX015A24R ..... 8
ASDX015D44D-DO ..... 8
ASDX015D44R ..... 8
ASDX015D44R-DO ..... 8
ASDX015G24R ..... 8
ASDX030A24R ..... 8
ASDX030D44R ..... 8
ASDX030G24R ..... 8
ASDX100A24R ..... 8
ASDX100D44R ..... 8
ASDX100G24R ..... 8
ASDXL005D44D-DO ..... 9
ASDXL010D44D ..... 9
ASDXL010D44D-DO ..... 9
ASDXL010D44R ..... 9
ASDXL010D44R-DO ..... 9
ASDXL010G24R ..... 9
ASDXL010G25R-DO ..... 9
AWM2100V ..... 13
AWM2200V ..... 13
AWM2300V ..... 13
AWM3100V ..... 13
AWM3200V ..... 13
AWM3300V ..... 13
AWM42150VH ..... 14
AWM42300V ..... 14
AWM43300V ..... 14
AWM43600V ..... 14
AWM5101VN ..... 14
AWM5102VN ..... 14
AWM5104VC ..... 14
AWM5104VN ..... 14
AWM720P1 ..... 15
AWM92100V ..... 15
AWM92200V ..... 15
BA-2RB-A2 ..... 89
BA-2RQ1-A2 ..... 89
BA-2RV-A2 ..... 90
BE-2R-A4 ..... 89
BZ-2R-A2 ..... 89
BZ-2RD-A2 ..... 89
BZ-2RDS-A2 ..... 90
BZ-2RDS-A2S ..... 90
BZ-2RQ1-A2 ..... 89
BZ-2RQ18-A2 ..... 90
BZ-2RQ181-A2 ..... 90
BZ-2RW80-A2 ..... 90
BZ-2RW82-A2 ..... 90
BZ-2RW822 ..... 90
BZ-2RW822-A2 ..... 90
BZ-2RW8225551-A2 ..... 90
BZ-2RW826-A2 ..... 90
BZ-2RW84-A2 ..... 90
BZ-2RW863-A2 ..... 90
BZ-R ..... 89
BZ-R-A2 ..... 89
BZ-R169 ..... 89
CPCL04DFC ..... 6
CPCL04GFC ..... 6
CPCL10DF ..... 6
CPCL10DFC ..... 6
CPXL04DF ..... 6
CSDA1AA ..... 86
CSDA1AC ..... 86
CSDA1BA ..... 86
CSDA1BC ..... 86
CSDA1DA ..... 86
CSDA1DC ..... 86
CSDC1AA ..... 86
CSDC1AC ..... 86
CSDC1BA ..... 86
CSDC1BC ..... 86
CSDC1DA ..... 86
CSDC1DC ..... 86
CSLA1CD ..... 85
CSLA1CF ..... 85
CSLA1CH ..... 85
CSLA1DE ..... 84
CSLA1DJ ..... 84
CSLA1DK ..... 84
CSLA1EL ..... 85
CSLA1GD ..... 85
CSLA2CD ..... 85
CSLA2DE ..... 84
CSLA2DG ..... 84
CSLA2DJ ..... 84
CSLA2DK ..... 84
CSLA2EJ ..... 85
CSLA2EL ..... 85
CSLA2EM ..... 85
CSLA2EN ..... 85
CSLA2GD ..... 85
CSLH3A45 ..... 85
CSNA111 ..... 82
CSNB121 ..... 82
CSNB131 ..... 82
CSNC241 ..... 82
CSNE151 ..... 82
CSNE151-100 ..... 82
CSNE151-200 ..... 82
CSNF151 ..... 82
CSNF161 ..... 82
CSNF161-002 ..... 83

CSNG251 ... 82
CSNJ481 ... 83
CSNJ481-001 ... 83
CSNK500M ... 83
CSNK500M-001 ... 83
CSNK591 ... 84
CSNK591-001 ... 84
CSNP661 ... 82
CSNP661-002 ... 82
CSNR151 ... 82
CSNR151-002 ... 83
CSNR161 ... 82
CSNR161-002 ... 83
CSNS300F ... 83
CSNS300M ... 83
CSNS300M-001 ... 83
CSNT651 ... 82
CSNT651-001 ... 82
DC001NDC4 ... 6
DC005NDR4 ... 6
DCXL01DN ... 6
DCXL10DN ... 6
DT-2R-A7 ... 91
DUXL01D ... 6
DUXL10D ... 6
DXXX-001 ... 30
DXXX-002 ... 30
DXXX-003 ... 30
FS300-100 ... 64
FSG15N1A ... 16
Heaters
3100 Silicone Wired-wound ... 66
3200 Silicone Chemically Etched ... 66
3400 Kapton or High Temperature ... 67
78000 Transparent ... 67
HEL-700-T-0-A ... 19
HEL-700-T-0-B ... 19
HEL-700-T-1-A ... 19
HEL-700-T-1-B ... 19
HEL-700-U-0-A ... 19
HEL-700-U-0-B ... 19
HEL-700-U-0-C ... 19
HEL-700-U-1-A ... 19
HEL-700-U-1-B ... 19
HEL-700-U-1-C ... 19
HEL-705-T-0-12-00 ... 20
HEL-705-T-1-12-00 ... 20
HEL-705-U-0-12-00 ... 20
HEL-705-U-1-12-00 ... 20
HEL-707-T-0-12-00 ... 20
HEL-707-T-1-12-00 ... 20
HEL-707-U-0-12-00 ... 20
HEL-707-U-1-12-00 ... 20
HEL-711-T-0-12-00 ... 20
HEL-711-T-1-12-00 ... 20
HEL-711-U-0-12-00 ... 20
HEL-711-U-1-12-00 ... 20
HEL-712-T-0-12-00 ... 20
HEL-712-T-1-12-00 ... 20
HEL-712-U-0-12-00 ... 20
HEL-712-U-1-12-00 ... 20
HEL-716-T-0-12-00 ... 20
HEL-716-T-1-12-00 ... 20
HEL-716-U-0-12-00 ... 20
HEL-716-U-1-12-00 ... 20
HEL-716-U-1-12-C2 ... 20
HEL-717-T-0-12-00 ... 20
HEL-717-T-1-12-00 ... 20
HEL-717-U-0-12-00 ... 20
HEL-717-U-1-12-00 ... 20
HIH-3602-A ... 18
HIH-3602-C ... 18
HIH-3602-L ... 18
HIH-4000-001 ... 18
HIH-4000-002 ... 18
HIH-4000-003 ... 18
HIH-4000-004 ... 18
HLC1395-002 ... 77
HLC2705-001 ... 76
HLC2707-001 ... 76
HOA0149-001 ... 77
HOA0866-T55 ... 78
HOA0870-N51 ... 78
HOA0880-P51 ... 78
HOA0890-L55 ... 78
HOA0901-011 ... 76
HOA0902-011 ... 76
HOA0961-N51 ... 79
HOA0971-N51 ... 79
HOA1180-002 ... 77
HOA1397-002 ... 77
HOA1405-002 ... 77
HOA1870-031 ... 78
HOA1877-001 ... 78
HOA1879-015 ... 78
HOA1882-012 ... 78
HOA2498-002 ... 77
HOA6963-N51 ... 79
HOA6972-N55 ... 79
HOA6981-L51 ... 79
HOA6990-T51 ... 79
HOA7720-M22 ... 79
HOA7730-M22 ... 79
HPX005GD ... 11
HPX015GD ... 11
HPX030AS ... 11
HPX030GD ... 11
HPX050GD ... 11
HPX100AS ... 11
HPX100GD ... 11
HSD015A ... 12
ICL1010002-01 ... 26
ICL1010004-01 ... 26
ICL1210005-01 ... 26
ICL1220002-01 ... 26
ICL122R508-01 ... 26
ICL1240002-01 ... 26
ICL1250002-01 ... 26
ICL1510006-01 ... 26
ICL1512004-01 ... 26
ICL1516004-01 ... 26
ICL1522102-01 ... 26
ICL152R508-01 ... 26
ICL155R006-01 ... 26
ICL155R007-01 ... 26
ICL1580003-01 ... 26
ICL2210008-01 ... 26
ICL2212103-01 ... 26
ICL221R020-01 ... 26
ICL222R018-01 ... 26
ICL222R515-01 ... 26
ICL321R030-01 ... 26
ICL32OR530-01 ... 26
LLE103000 ... 88
LLE103101 ... 88
LLE105000 ... 88
LLE105100 ... 88
LLE205000 ... 88
LLE305000 ... 88
LLN8651721 ... 88
LLN8651722 ... 88
RDXXX-001 ... 31
RDXXX-002 ... 31
SD1440-003L ... 75
SD2440-004 ... 75
SD3443-003 ... 75
SD5443-003 ... 75
SD5600-001 ... 76
SD5610-001 ... 76
SD5620-001 ... 76
SD5630-001 ... 76
SDP8405-003 ... 75
SDP8406-002 ... 75
SDP8436-003 ... 75
SDP8600-001 ... 76
SDX010IND4 ... 11

SDX05D4 ..... 10
SDX15A2 ..... 10
SDX15D4-A ..... 10
SE1450-003L ..... 74
SE1470-003L ..... 74
SE2460-003 ..... 74
SE2470-002 ..... 74
SE3455-004 ..... 74
SE3470-003 ..... 74
SE5455-003 ..... 74
SE5470-004 ..... 74
SEP8505-003 ..... 74
SEP8506-002 ..... 74
SEP8705-003 ..... 74
SEP8736-003 ..... 74
SMD2440-012 ..... 75
SME2470-021 ..... 74
SR13C-A1 ..... 72
SR13D-A1 ..... 72
SR13F-A1 ..... 72
SR13R-A1 ..... 72
SR16C-J4 ..... 73
SR16C-J6 ..... 73
SR16C-N ..... 73
SR17C-J6 ..... 73
SR17C-J7 ..... 73
SR3B-A1 ..... 72
SR3C-A1 ..... 72
SR3F-A1 ..... 72
SR3G-A1 ..... 72
SR4P3-A1 ..... 72
SS40A ..... 69
SS40A-F ..... 69
SS40A-T2 ..... 69
SS40A-T3 ..... 69
SS41 ..... 68
SS411A ..... 68
SS413A ..... 68
SS441A ..... 68
SS443A ..... 68
SS449A ..... 68
SS461A ..... 68
SS466A ..... 68
SS495A ..... 70
SS495A-SP ..... 70
SS495A1-S ..... 70
SS496A1 ..... 70
SS49E-L ..... 69
SS49E-T2 ..... 69
SS49E-T3 ..... 69
SS511AT ..... 68
SS513AT ..... 68
SS51T ..... 68
SS541AT ..... 68
SS543AT ..... 68
SS549AT ..... 68
SS561AT ..... 68
SS566AT ..... 68
SS59ET ..... 69
SS94A1 ..... 70
SS94A1B ..... 70
SS94A1E ..... 70
SS94A1F ..... 70
SS94A2 ..... 70
SS94A2C ..... 70
SS94A2D ..... 70
SS94B1 ..... 70
SS94B1A ..... 70
TD4A ..... 20
TD5A ..... 20
Temperature - Probes
Air Conditioning ..... 28
Air/Gas ..... 29
Earth Return (Ground) ..... 28
ES110 Inlet Air ..... 27
ES120 Coolant/Oil ..... 27
Immersion ..... 29
Refrigerant ..... 28
Surface ..... 28
Thermostats - Commerical
2450CM Ceramic Manual Reset ..... 35
2450HR Phenolic Automatic Reset ..... 34
2450R Fully Sealed ..... 37
2450R Phenolic Annular Auto. Reset . 37
2450R Phenolic Automatic Reset ..... 34
2450R Phenolic "One-shot" ½ in ..... 36
2450R Protected ..... 37
2450RC Ceramic Automatic Reset ..... 35
2450RCH Ceramic Automatic Reset ... 35
2450RCH Ceramic "One-shot" ½ in .... 36
2450A Heat Detection ..... 36
2455A Heat Detection ..... 36
2455R Phenolic Automatic Reset ..... 34
2455R Phenolic "One-shot" ½ in ..... 36
2455R Protected ..... 37
2455RBV Overmolded Auto.Reset ..... 36
2450RC Ceramic Automatic Reset ..... 35
2455RC Ceramic "One-shot" ½ in ..... 36
2455RM Phenolic Manual Reset ..... 35
2467RC Ceramic "One-shot" ½ in ..... 36
2467RCH Ceramic "One-shot" ½ in .... 36
Standard Mounting Bracket Guide ..... 40
Standard Terminal Guide ..... 38
Thermostats - High Reliability
3200 Aerospace ..... 63
3MS1 QPL Military ..... 63
3500 Military ..... 64
3153 Low Silhouette ..... 64
Thermostats - Precision
3000 Custom-packaged ..... 45
3001 Non-hermetic ..... 42
3001U Non-hermetic ..... 42
3004 Non-hermetic ..... 42
3100 Hermetic ..... 43
3100U Hermetic ..... 43
3100UX Hermetic ..... 43
3106 Hermetic ..... 43
3150 Low Silhouette Hermetic ..... 43
3150U Low Silhouette Hermetic ..... 43
3150UX Low Silhouette Hermetic ..... 43
3156 Low Silhouette Hermetic ..... 43
3156U Low Silhouette Hermetic ..... 43
3450CM Ceramic Manual Reset ..... 47
3450HR Phenolic Automatic Reset ..... 46
3450R Phenolic Automatic Reset ..... 46
3450R Phenolic "One-shot" ½ in ..... 48
3450RC Ceramic Automatic Reset ..... 47
3450RC Ceramic "One-shot" ½ in ..... 48
3450RCH Ceramic Automatic Reset ... 47
3450RCH Ceramic "One-shot ½ in ..... 48
3455R Phenolic Automatic Reset ..... 46
3455R Phenolic "One-shot" ½ in ..... 49
3455RC Ceramic Automatic Reset ..... 47
3455RC Ceramic "One-shot" ½ in ..... 49
3455RBV Overmolded Auto. Reset ..... 48
3455RM Phenolic Manual Reset ..... 47
3600 TO-5 Thermal ..... 44
3601 TO-5 Thermal ..... 44
3800 Industrial Grade ..... 46
Standard Mounting Bracket Guide ..... 51
Standard Terminal Guide ..... 50
V5A010CB ..... 96
V5A010CB4E ..... 96
V5B010CB3 ..... 96
V5B010FB3 ..... 96
V5B010TB ..... 96
V5B210CB ..... 96
V5B210CB1C ..... 96
V5B210CB1E ..... 96
V5B210CB3D ..... 96
V5C010BB ..... 96
V5C010BB1G ..... 96
V5C010BB3B ..... 96
V5C010BB3D ..... 96
V5C010EB3 ..... 96
V5C010TB3 ..... 96

V5D030BB ..... 96
V5P010CB ..... 96
V5R030CB ..... 96
V5S020CB ..... 96
V5S030CB ..... 96
V7-1A17D8 ..... 97
V7-1A17D8-022 ..... 98
V7-1A17P02 ..... 97
V7-1B10E9-207 ..... 98
V7-1B17D8 ..... 97
V7-1B17D8-048 ..... 98
V7-1B17D8-263 ..... 98
V7-1B19D8-022 ..... 98
V7-1B19E9 ..... 97
V7-1C17D8 ..... 97
V7-1C17D8-002 ..... 98
V7-1C17D8-022 ..... 98
V7-1C17D8-048 ..... 98
V7-1C17D8-201 ..... 98
V7-1C17D8-207 ..... 98
V7-1C17D8-263 ..... 98
V7-1C17E9 ..... 97
V7-1C17E9-002 ..... 98
V7-1C17E9-201 ..... 98
V7-1C17E9-207 ..... 98
V7-1C18E9 ..... 97
V7-1C18E9-022 ..... 98
V7-1D10D8 ..... 97
V7-1E10D8 ..... 97
V7-1E17P02 ..... 97
V7-1E19E9 ..... 97
V7-1S17D8 ..... 97
V7-1S17D8-022 ..... 98
V7-1S17D8-201 ..... 98
V7-1S17D8-207 ..... 98
V7-1S17D8-263 ..... 98
V7-1V19E9 ..... 97
V7-1V19E9-048 ..... 98
V7-1V19E9-207 ..... 98
V7-1Z19E9 ..... 97
V7-2A17D8-022 ..... 98
V7-2A17D8-207 ..... 98
V7-2A17E9 ..... 97
V7-2B17D8 ..... 97
V7-2B17D8-022 ..... 98
V7-2B17D8-048 ..... 98
V7-2B17D8-201 ..... 98
V7-2B17D8-207 ..... 98
V7-2B17E9 ..... 97
V7-2B17E9-002 ..... 98
V7-2B17P02 ..... 97
V7-2B19E9-048 ..... 98
V7-2S17D8 ..... 97
V7-2S17D8-022 ..... 98
V7-2S17D8-201 ..... 98
V7-2S17D8-263 ..... 98
V7-3A17D8 ..... 97
V7-3E10E8 ..... 97
V7-3E10E9 ..... 97
V7-3E17D8 ..... 97
V7-3E17E9 ..... 97
V7-3E17E9-022 ..... 98
V7-3E19E9 ..... 97
V7-3S17D8-022 ..... 98
V7-3S17D8-048 ..... 98
V7-3S17E9 ..... 97
V7-3S17E9-022 ..... 98
V7-3S17E9-263 ..... 98
V7-4A17D8 ..... 97
V7-4A18E9 ..... 97
V7-4S17D8 ..... 97
V7-5D17E9 ..... 97
V7-6B19D8 ..... 97
V7-6C17D8 ..... 97
V7-6C17D8-263 ..... 98
V7-6C18D8-002 ..... 98
V7-6C18D8-048 ..... 98
V7-7A19D8 ..... 97
V7-7B17D8-201 ..... 98
V7-7B19D8-263 ..... 98
V7-7D17D8-207 ..... 98
V7-9W1AE9-048 ..... 98
XCA415AN ..... 7
XCX01DNC ..... 7
XCX01DNH ..... 7
XCX15DNC ..... 7
XPC01DFC ..... 7
XPC15DTC ..... 7
XSXL04GF ..... 7
ZM10B10A01 ..... 93
ZM50E10A01 ..... 93
ZM50E10D01 ..... 92
ZM50E10E01 ..... 94
ZM50E70A01 ..... 93
ZM50E70D01 ..... 92
ZM50E70E01 ..... 94
ZM90G20A01 ..... 93
ZV10B70A01 ..... 94
ZV50E10A01 ..... 94
ZV50E10B01 ..... 95
ZV50E20A01 ..... 94
ZV50E20F01 ..... 95
ZV50E70C01 ..... 95
ZV50E70F01 ..... 95
ZW10E15CD1 ..... 95
ZW10E90FW1 ..... 95
ZW50F15AD1 ..... 95
ZX10C10A01 ..... 93
ZX40E10C01 ..... 93
ZX40E10E01 ..... 94
ZX40E30A01 ..... 93
ZX40E30C01 ..... 93
ZX40E30E01 ..... 94

Honeywell Sensing and Control designs, manufactures and markets the industry's most extensive line of sensing and control technologies available from a single switch or sensor manufacturer. You can trust Honeywell for developing the right products for your applications.

## Warranty/Remedy

Honeywell warrants goods of its manufacture as being free of defective materials and faulty workmanship. Honeywell's standard product warranty applies unless agreed to otherwise by Honeywell in writing; please refer to your order acknowledgement or consult your local sales office for specific warranty details. If warranted goods are returned to Honeywell during the period of coverage, Honeywell will repair or replace, at its option, without charge those items it finds defective. **The foregoing is buyer's sole remedy and is in lieu of all warranties, expressed or implied, including those of merchantability and fitness for a particular purpose. In no event shall Honeywell be liable for consequential, special, or indirect damages.**

While we provide application assistance personally, through our literature and the Honeywell web site, it is up to the customer to determine the suitability of the product in the application.

Specifications may change without notice. The information we supply is believed to be accurate and reliable as of this printing. However, we assume no responsibility for its use.

## Sales and Service

Honeywell serves its customers through a worldwide network of sales offices, representatives and distributors. For application assistance, current specifications, pricing or name of the nearest Authorized Distributor, contact your local sales office or:

**E-mail:** info.sc@honeywell.com

**Internet:** www.honeywell.com/sensing

**Phone and Fax:**

| | |
|---|---|
| Asia Pacific | +65 6355-2828 |
| | +65 6445-3033 Fax |
| Europe | +44 (0) 1698 481481 |
| | +44 (0) 1698 481676 Fax |
| Latin America | +1-305-805-8188 |
| | +1-305-883-8257 Fax |
| USA/Canada | +1-800-537-6945 |
| | +1-815-235-6847 |
| | +1-815-235-6545 Fax |

**Automation and Control Solutions**
Sensing and Control
Honeywell
11 West Spring Street
Freeport, Illinois 61032 USA
www.honeywell.com

Honeywell

100455-3-EN IL50 GLO
May 2005
© 2005 Honeywell International Inc. All rights reserved.

Общество с ограниченной ответственностью «МосЧип» ИНН 7719860671 / КПП 771901001
Адрес: 105318, г.Москва, ул.Щербаковская д.3, офис 1107

**Данный компонент на территории Российской Федерации**

**Вы можете приобрести в компании MosChip.**

Для оперативного оформления запроса Вам необходимо перейти по данной ссылке:

http://moschip.ru/get-element

Вы можете разместить у нас заказ для любого Вашего проекта, будь то серийное производство или разработка единичного прибора.

В нашем ассортименте представлены ведущие мировые производители активных и пассивных электронных компонентов.

Нашей специализацией является поставка электронной компонентной базы двойного назначения, продукции таких производителей как XILINX, Intel (ex.ALTERA), Vicor, Microchip, Texas Instruments, Analog Devices, Mini-Circuits, Amphenol, Glenair.

Сотрудничество с глобальными дистрибьюторами электронных компонентов, предоставляет возможность заказывать и получать с международных складов практически любой перечень компонентов в оптимальные для Вас сроки.

На всех этапах разработки и производства наши партнеры могут получить квалифицированную поддержку опытных инженеров.

Система менеджмента качества компании отвечает требованиям в соответствии с ГОСТ Р ИСО 9001, ГОСТ РВ 0015-002 и ЭС РД 009

**Офис по работе с юридическими лицами:**

105318, г.Москва, ул.Щербаковская д.3, офис 1107, 1118, ДЦ «Щербаковский»

Телефон: +7 495 668-12-70 (многоканальный)

Факс: +7 495 668-12-70 (доб.304)

E-mail: info@moschip.ru

Skype отдела продаж:
moschip.ru
moschip.ru_4
moschip.ru_6
moschip.ru_9