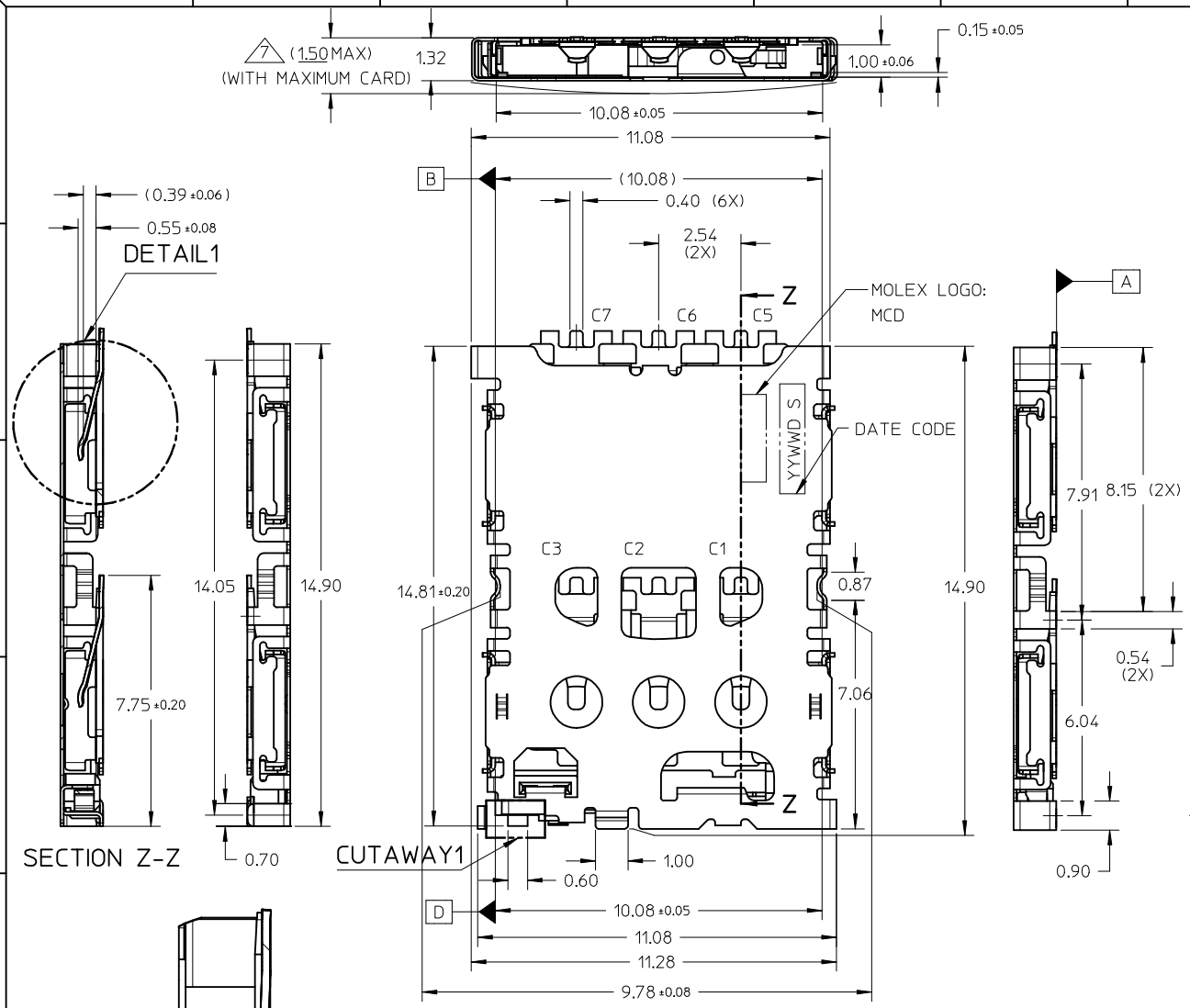

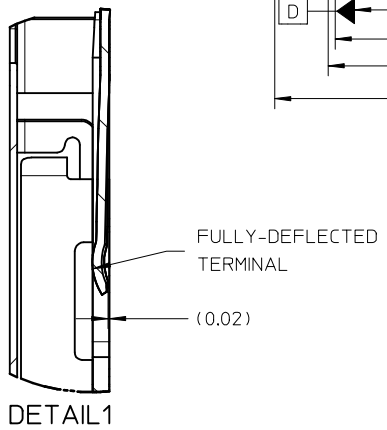

NOTES:

1. MATERIALS:
   1.1 CONNECTOR:-
   INSERT MOLD HOUSING: LCP, GLASS FILLED, UL94V-0, COLOUR BLACK.
   TERMINAL: TITANIUM COPPER, THICKNESS: 0.12MM
   DETECT PIN: TITANIUM COPPER, THICKNESS: 0.12MM
   SHELL: STAINLESS STEEL, THICKNESS: 0.10MM
2. PLATING FINISHES:
   2.1 TERMINAL:-
   CONTACT: 0.38um MIN. GOLD ON CONTACT AREA OVER 2.00um MIN. NICKEL UNDERPLATE.
   SOLDERTAIL: 0.025um MIN. GOLD FLASH OVER 2.00um MIN. NICKEL UNDERPLATE.
   2.2 SHELL:-
   CONTACT: 0.05um MIN. GOLD ON CONTACT AREA OVER 2.00um MIN. NICKEL UNDERPLATE.
   SOLDERTAIL: 0.025um MIN. GOLD FLASH OVER 2.00um MIN. NICKEL UNDERPLATE.
   2.3 DETECT PIN:-
   CONTACT: 0.127um MIN. GOLD ON CONTACT AREA OVER 2.00um MIN. NICKEL UNDERPLATE.
   SOLDERTAIL: 1.27um MIN. MATTE TIN OVER 2.00um MIN. NICKEL UNDERPLATE.
3. PRODUCT SPECIFICATION: PS-151073-0001
4. PACKAGING SPECIFICATION: PK-151073-0001
5. OVERALL (SOLDERTAIL & SOLDERTAB) COPLANARITY 0.08MM MAX. BEFORE REFLOW.
6. CONNECTOR TO BE USED TOGETHER WITH MOLEX NANO SIM CARD TRAY ONLY.

7. DIMENSION INCLUSIVE OF BULGE

THIS DESIGN IS BASED ON DESIGN OBJECTIVES AND IS STRICTLY TENTATIVE. IT MAY CHANGE BASED ON RESULTS OF ADDITIONAL DESIGN REVIEWS & VERIFICATIONS.

ADD TOL TO CONTACT TIP	2015/03/03	QUALITY SYMBOLS	GENERAL TOLERANCES (UNLESS SPECIFIED)	DIMENSION STYLE: MM ONLY	SCALE: NTS	DESIGN UNITS: METRIC	THIRD ANGLE PROJECTION
EC NO: S2015-0916	2015/03/10		mm / INCH	DRAWN BY: SCHEONG	DATE: 2014/07/16	TITLE: NANO SIM CONNECTOR 1.32MM HEIGHT WITH TRAY AND DETECT PIN	
DRWN:SCHEONG	2015/03/12		4 PLACES: ± --- / ± ---	CHECKED BY: GMENARLY	DATE: 2015/03/10		
CH'KD:GMENARLY			3 PLACES: ± --- / ± ---	APPROVED BY: KHLIM	DATE: 2015/03/12	molex	
APPR:KHLIM			2 PLACES: ± 0.10 / ± ---	MATERIAL NO.: SEE TABLE	DOCUMENT NO.: SD-151073-0001		SHEET NO.: 1 OF 3
12	REV	DESCRIPTION	1 PLACE: ± --- / ± ---				
			0 PLACE: ± --- / ± ---				
			ANGULAR ± 3 °				
			DRAFT WHERE APPLICABLE MUST REMAIN WITHIN DIMENSIONS	SIZE: A3	THIS DRAWING CONTAINS INFORMATION THAT IS PROPRIETARY TO MOLEX INCORPORATED AND SHOULD NOT BE USED WITHOUT WRITTEN PERMISSION		

tb_frame_A3_P_AM_T
Rev. G 2012/01/11

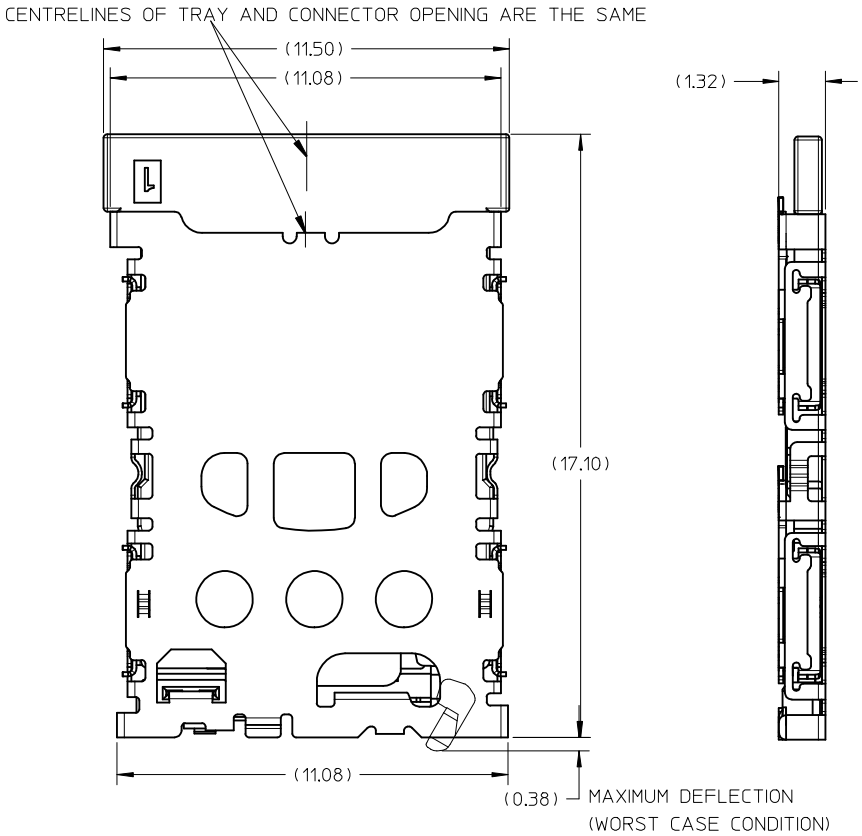

CONNECTOR WITH TRAY

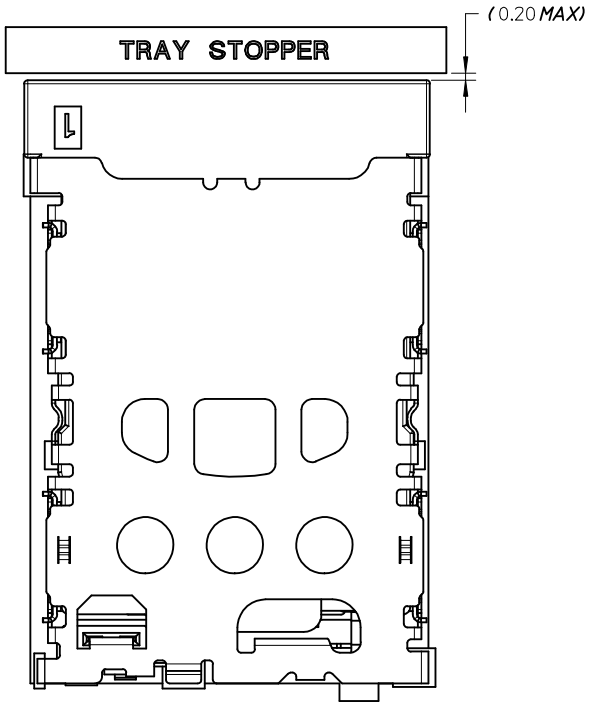

SYSTEM LEVEL

DESCRIPTION	PART NUMBER
CONNECTOR	151073-1000
NANO SIM CARD TRAY	151073-0011

CARD INSERTION STATE	DETECT SWITCH CIRCUIT STATE	SCHEMATIC
CARD MATED	OPENED	D.S. — D.C.
CARD UNMATED	CLOSED	D.S. — D.C.

ADD TOL TO CONTACT TIP
EC NO: S2015-0916
DRWN:SCHEONG 2015/03/03
CH'KD:GMENARLY 2015/03/10
APPR:KHLIM 2015/03/12
DESCRIPTION
REV 12

QUALITY SYMBOLS
F_A=0
F_C=0
F_P=0

GENERAL TOLERANCES (UNLESS SPECIFIED)

	mm	INCH
4 PLACES	± ---	± ---
3 PLACES	± ---	± ---
2 PLACES	± 0.10	± ---
1 PLACE	± ---	± ---
0 PLACE	± ---	± ---

ANGULAR ± 3 °

DRAFT WHERE APPLICABLE MUST REMAIN WITHIN DIMENSIONS

DIMENSION STYLE: MM ONLY
SCALE: NTS
DESIGN UNITS: METRIC
THIRD ANGLE PROJECTION

DRAWN BY: SCHEONG DATE: 2014/07/16
CHECKED BY: GMENARLY DATE: 2015/03/10
APPROVED BY: KHLIM DATE: 2015/03/12

TITLE: NANO SIM CONNECTOR 1.32MM HEIGHT WITH TRAY AND DETECT PIN

molex

MATERIAL NO.: SEE TABLE
DOCUMENT NO.: SD-151073-0001
SHEET NO.: 2 OF 3
SIZE: A3

THIS DRAWING CONTAINS INFORMATION THAT IS PROPRIETARY TO MOLEX INCORPORATED AND SHOULD NOT BE USED WITHOUT WRITTEN PERMISSION

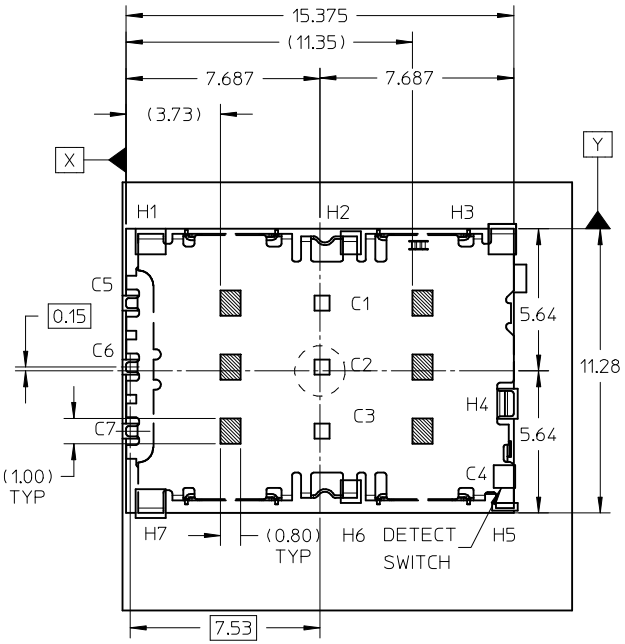

TOP VIEW

CONNECTOR KEEPOUT ZONE
WITH PART CENTER LOCATION OF
CONNECTOR RELATIVE TO PCB

KEEPOUT AREA FOR WIRING

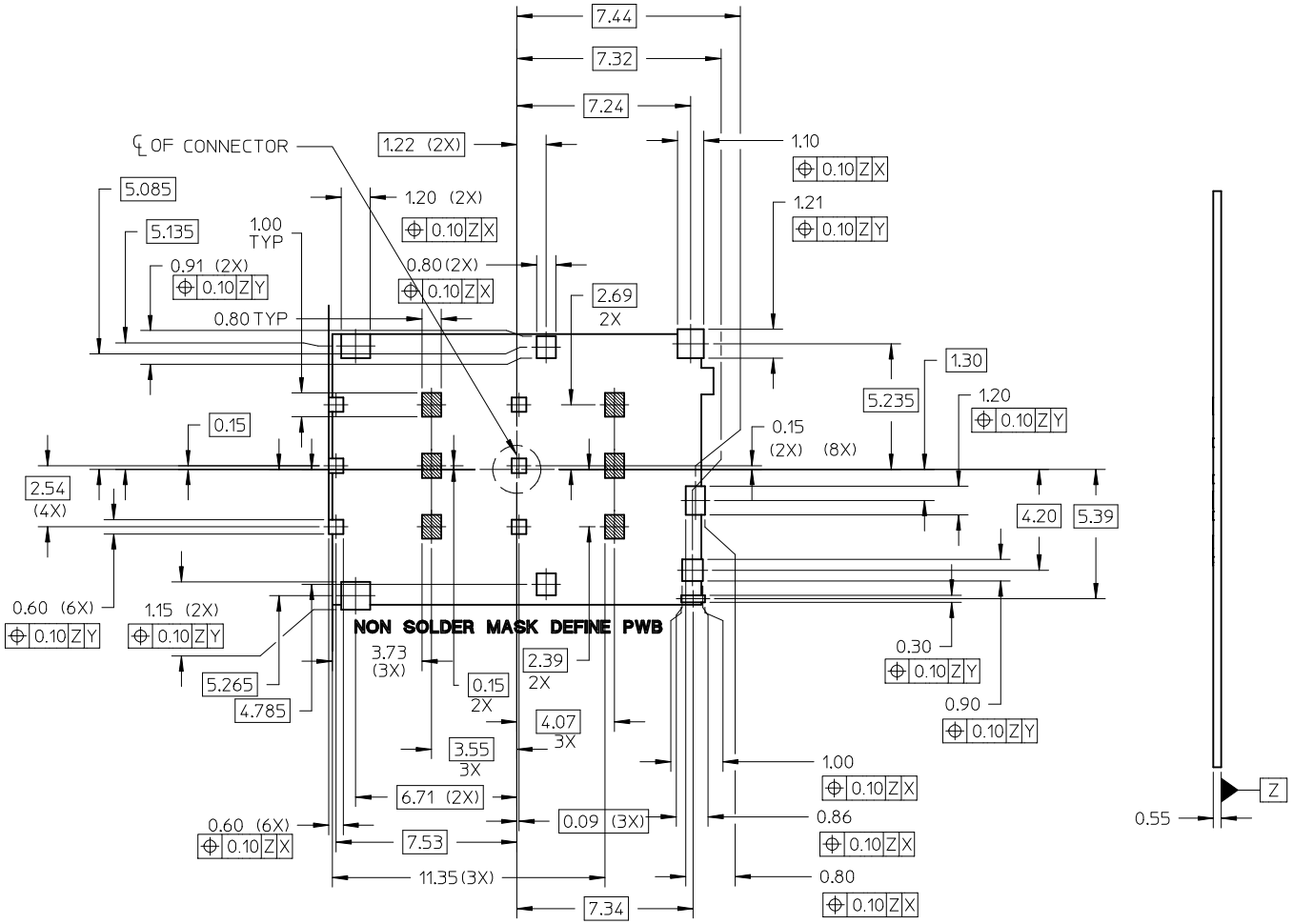

TOP VIEW

RECOMMENDED PWB LAYOUT
(NON SOLDER MASK DEFINE PWB)
PWB TOLERANCE: ±0.05MM

PIN NO	ASSIGNMENT
C1	Vcc (SUPPLY VOLTAGE)
C2	RST (RESET SIGNAL)
C3	CLK (CLOCK SIGNAL)
C4	DETECT SWITCH
C5	GND
C6	Vpp (VARIABLE SUPPLY VOLTAGE)
C7	I/O (DATA INPUT/OUTPUT)
H1	GND
H2	GND
H3	GND
H5	GND
H6	GND
H7	GND

ADD TOL TO CONTACT TIP
EC NO: S2015-0916
DRWN:SCHEONG 2015/03/03
CH'KD:GMENARLY 2015/03/10
APPR:KHLIM 2015/03/12
DESCRIPTION
REV 12

QUALITY SYMBOLS
F_A=0
F_C=0
F_P=0

GENERAL TOLERANCES (UNLESS SPECIFIED)

	mm	INCH
4 PLACES	± ---	± ---
3 PLACES	± ---	± ---
2 PLACES	± 0.10	± ---
1 PLACE	± ---	± ---
0 PLACE	± ---	± ---

ANGULAR ± 3 °

DRAFT WHERE APPLICABLE MUST REMAIN WITHIN DIMENSIONS

DIMENSION STYLE: MM ONLY
SCALE: NTS
DESIGN UNITS: METRIC
THIRD ANGLE PROJECTION

DRAWN BY: SCHEONG DATE: 2014/07/16
CHECKED BY: GMENARLY DATE: 2015/03/10
APPROVED BY: KHLIM DATE: 2015/03/12

TITLE: NANO SIM CONNECTOR 1.32MM HEIGHT WITH TRAY AND DETECT PIN

molex

MATERIAL NO.: SEE TABLE
DOCUMENT NO.: SD-151073-0001
SHEET NO.: 3 OF 3
SIZE: A3

THIS DRAWING CONTAINS INFORMATION THAT IS PROPRIETARY TO MOLEX INCORPORATED AND SHOULD NOT BE USED WITHOUT WRITTEN PERMISSION

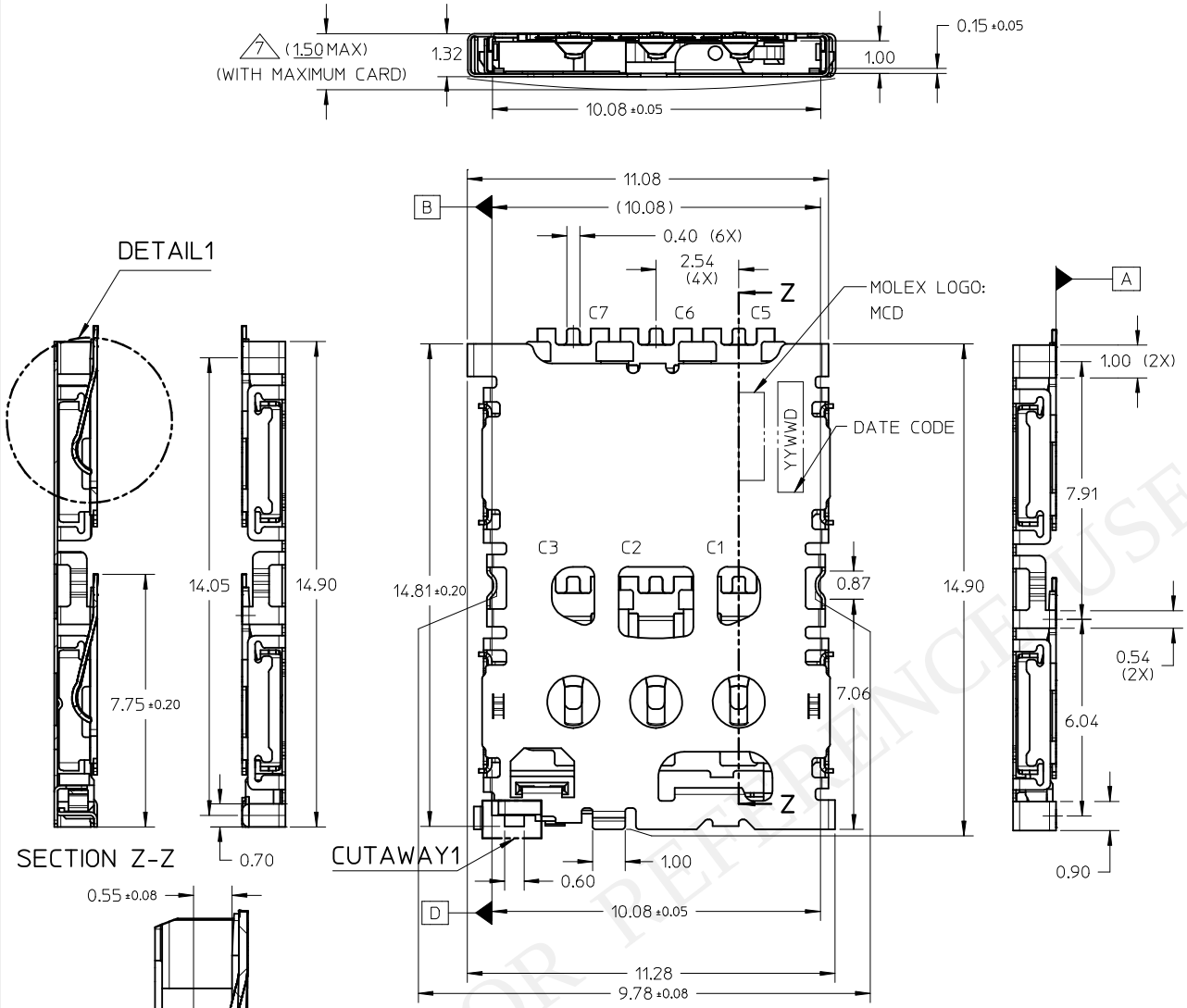

NOTES:

1. MATERIALS:
   1.1 CONNECTOR:-
   INSERT MOLD HOUSING: LCP, GLASS FILLED, UL94V-0, COLOUR BLACK.
   TERMINAL: TITANIUM COPPER, THICKNESS: 0.12MM
   DETECT PIN: TITANIUM COPPER, THICKNESS: 0.12MM
   SHELL: STAINLESS STEEL, THICKNESS: 0.10MM
2. PLATING FINISHES:
   2.1 TERMINAL:-
   CONTACT: 0.38um MIN. GOLD ON CONTACT AREA OVER 2.00um MIN. NICKEL UNDERPLATE.
   SOLDERTAIL: 0.025um MIN. GOLD FLASH OVER 2.00um MIN. NICKEL UNDERPLATE.
   2.2 SHELL:-
   CONTACT: 0.05um MIN. GOLD ON CONTACT AREA OVER 2.00um MIN. NICKEL UNDERPLATE.
   SOLDERTAIL: 0.025um MIN. GOLD FLASH OVER 2.00um MIN. NICKEL UNDERPLATE.
   2.3 DETECT PIN:-
   CONTACT: 0.127um MIN. GOLD ON CONTACT AREA OVER 2.00um MIN. NICKEL UNDERPLATE.
   SOLDERTAIL: 1.27um MIN. MATTE TIN OVER 2.00um MIN. NICKEL UNDERPLATE.
3. PRODUCT SPECIFICATION: PS-151073-0001
4. PACKAGING SPECIFICATION: PK-151073-0001
5. OVERALL (SOLDERTAIL & SOLDERTAB) COPLANARITY 0.08MM MAX. BEFORE REFLOW.
6. CONNECTOR TO BE USED TOGETHER WITH MOLEX NANO SIM CARD TRAY ONLY.
7. DIMENSION INCLUSIVE OF BULGE
8. CUSTOMER STENCIL THICKNESS: 0.10 ~ 0.12mm AND STENCIL OPENING: 1:1 MIN , 1:1.5 MAX

FOR REFERENCE USE ONLY

PRELIM. RELEASE	EC NO: S2016-0054	DRWN:SCHEONG	2015/07/07
		CHKD:	
		APPR:SCHEONG	2015/07/14
REV 1	DESCRIPTION		

QUALITY SYMBOLS: FA=0, FC=6, FP=0

GENERAL TOLERANCES (UNLESS SPECIFIED)

	mm	INCH
4 PLACES	± ---	± ---
3 PLACES	± ---	± ---
2 PLACES	± 0.10	± ---
1 PLACE	± ---	± ---
0 PLACE	± ---	± ---
ANGULAR ± 3 °		

DRAFT WHERE APPLICABLE MUST REMAIN WITHIN DIMENSIONS

DIMENSION STYLE: MM ONLY	SCALE: NTS	DESIGN UNITS: METRIC	THIRD ANGLE PROJECTION
DRAWN BY: SCHEONG	DATE: 2015/07/07	TITLE: NANO SIM CONNECTOR 1.32MM HEIGHT WITH TRAY AND DETECT PIN	
CHECKED BY	DATE		
APPROVED BY: SCHEONG	DATE: 2015/07/14	molex	
MATERIAL NO.: SEE TABLE	DOCUMENT NO.: SD-151073-0010		SHEET NO.: 1 OF 3
SIZE: A3	THIS DRAWING CONTAINS INFORMATION THAT IS PROPRIETARY TO MOLEX INCORPORATED AND SHOULD NOT BE USED WITHOUT WRITTEN PERMISSION		

tb_frame_A3_P_AM_T
Rev. G 2012/01/11

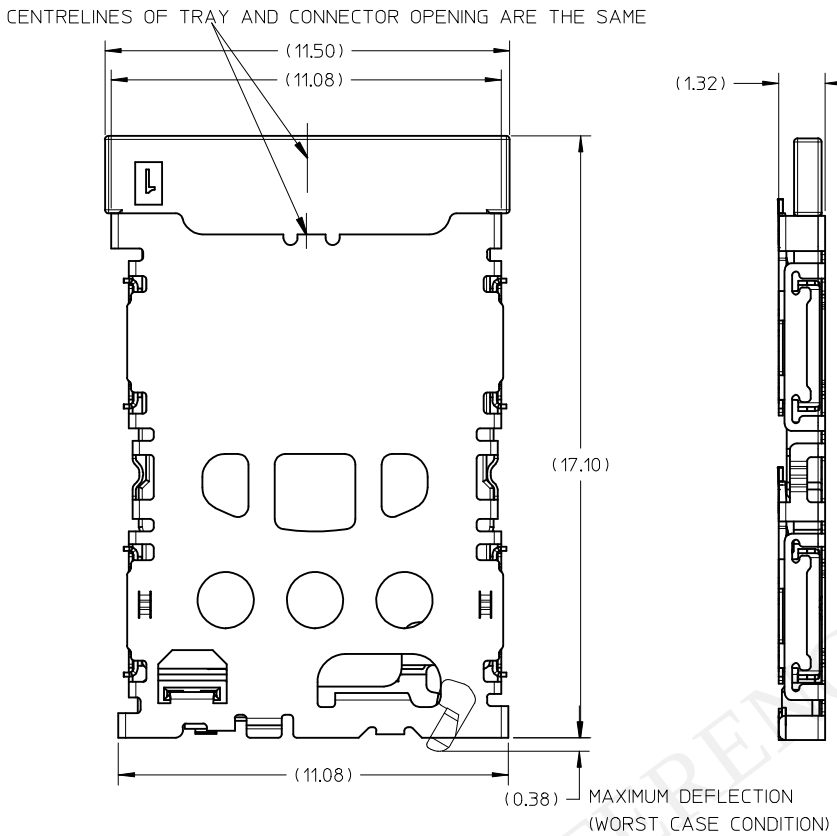

CONNECTOR WITH TRAY

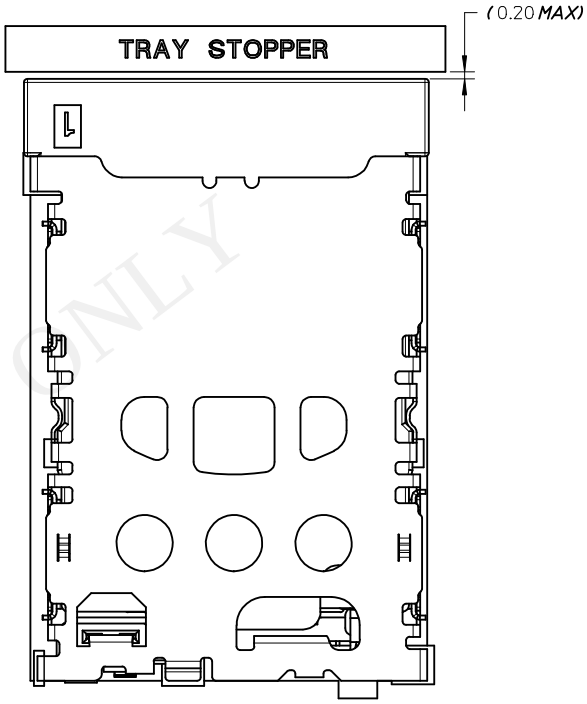

SYSTEM LEVEL

FOR REFERENCE USE ONLY

DESCRIPTION	PART NUMBER
CONNECTOR	151073-0001
NANO SIM CARD TRAY	151073-0030

CARD INSERTION STATE	DETECT SWITCH CIRCUIT STATE	SCHEMATIC
CARD MATED	OPENED	D.S. — D.C.
CARD UNMATED	CLOSED	D.S. — D.C.

PRELIM. RELEASE
EC NO: S2016-0054 2015/07/07
DRWN:SCHEONG
CH'KD:
APPR:SCHEONG 2015/07/14
DESCRIPTION
REV 1

QUALITY SYMBOLS
F_A=0
F_C=0
F_P=0

GENERAL TOLERANCES (UNLESS SPECIFIED)

	mm	INCH
4 PLACES	± ---	± ---
3 PLACES	± ---	± ---
2 PLACES	± 0.10	± ---
1 PLACE	± ---	± ---
0 PLACE	± ---	± ---
ANGULAR ± 3 °		

DRAFT WHERE APPLICABLE MUST REMAIN WITHIN DIMENSIONS

DIMENSION STYLE: MM ONLY
SCALE: NTS
DESIGN UNITS: METRIC
THIRD ANGLE PROJECTION

DRAWN BY: SCHEONG DATE: 2015/07/07
CHECKED BY: DATE:
APPROVED BY: SCHEONG DATE: 2015/07/14

TITLE: NANO SIM CONNECTOR 1.32MM HEIGHT WITH TRAY AND DETECT PIN

molex

MATERIAL NO.: SEE TABLE
DOCUMENT NO.: SD-151073-0010
SHEET NO.: 2 OF 3
SIZE: A3

THIS DRAWING CONTAINS INFORMATION THAT IS PROPRIETARY TO MOLEX INCORPORATED AND SHOULD NOT BE USED WITHOUT WRITTEN PERMISSION

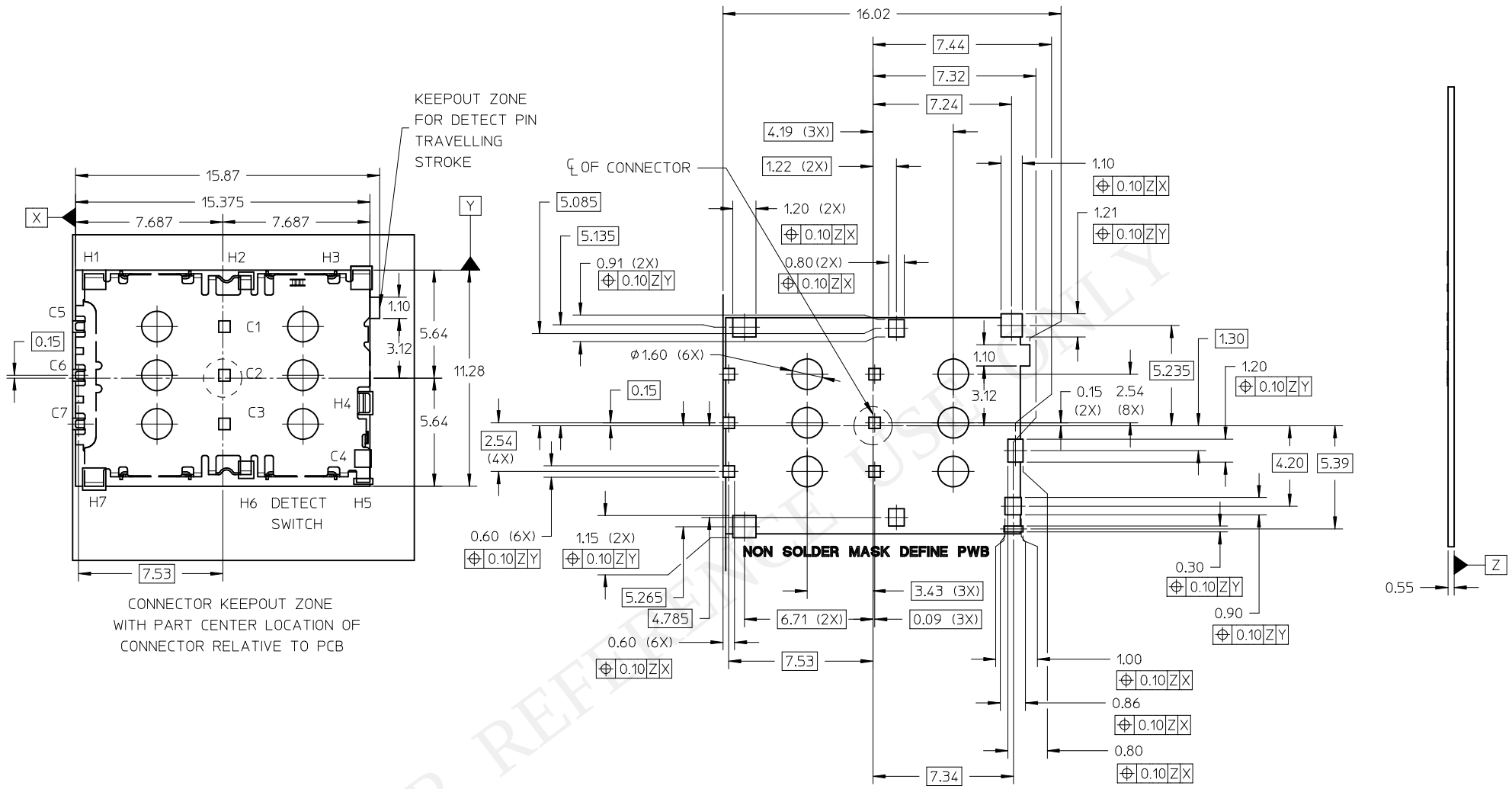

RECOMMENDED PWB LAYOUT
(NON SOLDER MASK DEFINE PWB)
PWB TOLERANCE: ±0.05MM

FOR REFERENCE USE ONLY

PRELIM. RELEASE EC NO: S2016-0054 DRWN:SCHEONG 2015/07/07 CH'KD: APPR:SCHEONG 2015/07/14 DESCRIPTION	QUALITY SYMBOLS FA=0 FC=0 FP=0	GENERAL TOLERANCES (UNLESS SPECIFIED) mm / INCH 4 PLACES ± --- / ± --- 3 PLACES ± --- / ± --- 2 PLACES ± 0.10 / ± --- 1 PLACE ± --- / ± --- 0 PLACE ± --- / ± --- ANGULAR ± 3 ° DRAFT WHERE APPLICABLE MUST REMAIN WITHIN DIMENSIONS	DIMENSION STYLE MM ONLY DRAWN BY SCHEONG DATE 2015/07/07 CHECKED BY DATE APPROVED BY SCHEONG DATE 2015/07/14 MATERIAL NO. SEE TABLE	SCALE NTS	DESIGN UNITS METRIC	THIRD ANGLE PROJECTION TITLE NANO SIM CONNECTOR 1.32MM HEIGHT WITH TRAY AND DETECT PIN molex DOCUMENT NO. SD-151073-0010	SHEET NO. 3 OF 3
REV 1			SIZE A3	THIS DRAWING CONTAINS INFORMATION THAT IS PROPRIETARY TO MOLEX INCORPORATED AND SHOULD NOT BE USED WITHOUT WRITTEN PERMISSION			

Общество с ограниченной ответственностью «МосЧип» ИНН 7719860671 / КПП 771901001
Адрес: 105318, г.Москва, ул.Щербаковская д.3, офис 1107

Данный компонент на территории Российской Федерации

Вы можете приобрести в компании MosChip.

Для оперативного оформления запроса Вам необходимо перейти по данной ссылке:

http://moschip.ru/get-element

Вы можете разместить у нас заказ для любого Вашего проекта, будь то серийное производство или разработка единичного прибора.

В нашем ассортименте представлены ведущие мировые производители активных и пассивных электронных компонентов.

Нашей специализацией является поставка электронной компонентной базы двойного назначения, продукции таких производителей как XILINX, Intel (ex.ALTERA), Vicor, Microchip, Texas Instruments, Analog Devices, Mini-Circuits, Amphenol, Glenair.

Сотрудничество с глобальными дистрибьюторами электронных компонентов, предоставляет возможность заказывать и получать с международных складов практически любой перечень компонентов в оптимальные для Вас сроки.

На всех этапах разработки и производства наши партнеры могут получить квалифицированную поддержку опытных инженеров.

Система менеджмента качества компании отвечает требованиям в соответствии с ГОСТ Р ИСО 9001, ГОСТ РВ 0015-002 и ЭС РД 009

Офис по работе с юридическими лицами:

105318, г.Москва, ул.Щербаковская д.3, офис 1107, 1118, ДЦ «Щербаковский»

Телефон: +7 495 668-12-70 (многоканальный)

Факс: +7 495 668-12-70 (доб.304)

E-mail: info@moschip.ru

Skype отдела продаж:
moschip.ru
moschip.ru_4
moschip.ru_6
moschip.ru_9