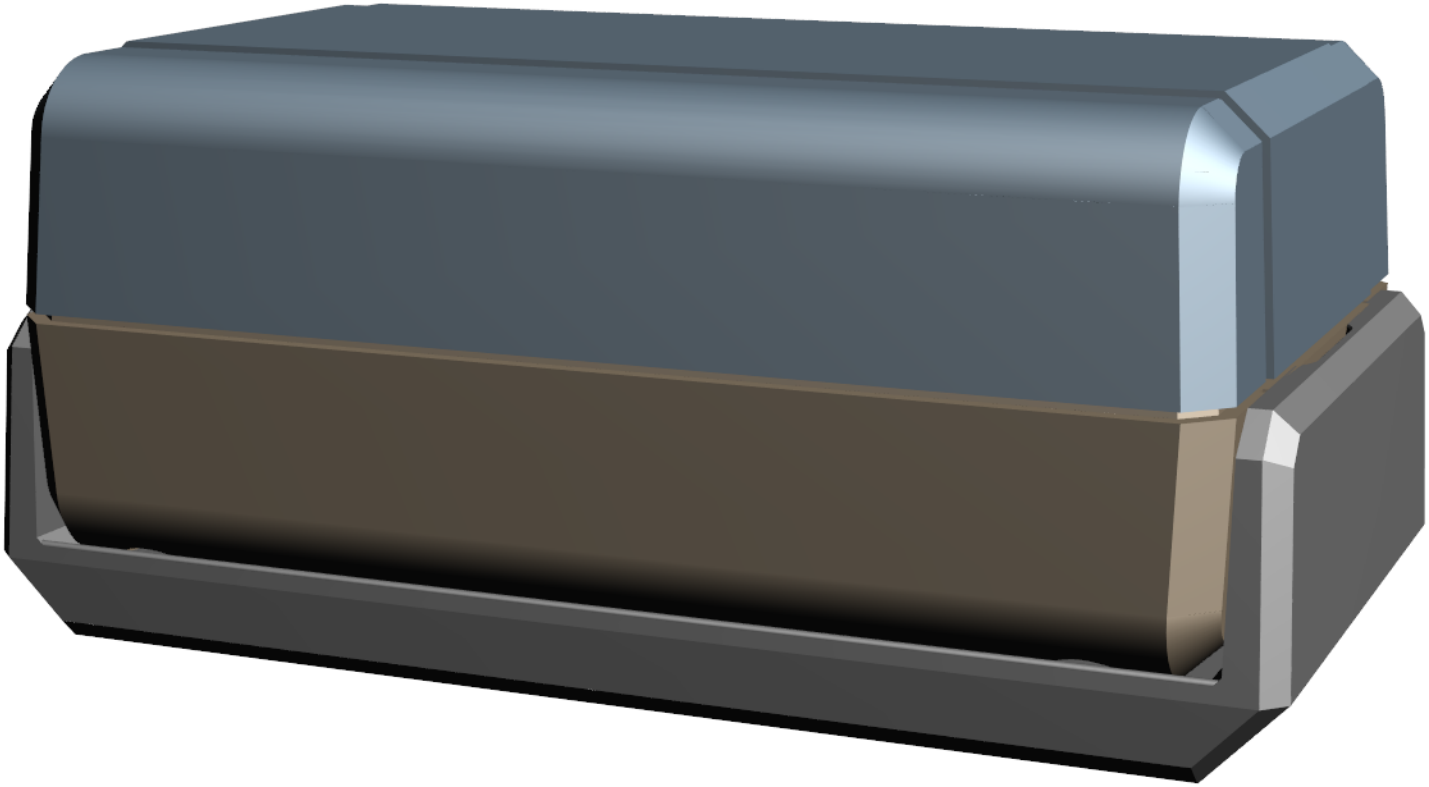

Ordering a market-ready enclosure© is made fast and affordable with our complete in-house capabilities. New Age provides machined openings to fit your PCB, pad printing for your graphics, custom enclosures, custom colors, final assembly, testing and fulfillment services to save you additional time and money. Ask your representative for a free quote today 805-595-1310.

Fast and Affordable Customization

CNC Modifications
Pad Printing
Colored Resins
EMI/RF Shielding
Custom Enclosure
Assembly & Testing

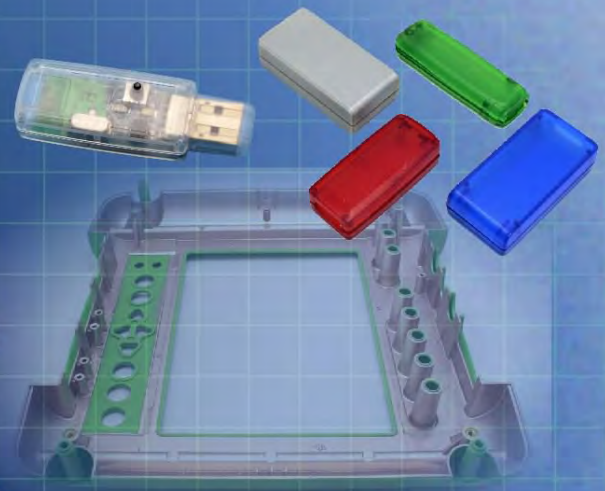

nqa.
AS9100
Registered

ISO quality
off-the-shelf
to market-ready©

NEW AGE
ENCLOSURES

www.NewAgeEnclosures.com
4330 Santa Fe Road • San Luis Obispo, CA 93401 • T 805.595.1310 • F 805.595.1024

NAE Cover H8 Boyer

NOTES: UNLESS OTHERWISE SPECIFIED

1. CORNERS DRAWN SHARP TO BE R.005 MAXIMUM.
2. EXTERIOR SURFACE TEXTURE TO BE LIGHT EDM FINISH. EQUIVALENT TO MT-11020.
3. INTERIOR SURFACE TEXTURE TO BE: NONE
4. ALL INSIDE RADII .010R. ALL OUTSIDE RADII .020R MAX, UNLESS OTHERWISE SPECIFIED.
5. ALL EXTERNAL DIMENSIONS AFFECTED BY THE DRAFT APPLY AT THE LARGE END OF THE FEATURE, AND ALL INTERNAL FEATURES AFFECTED BY THE DRAFT APPLY AT THE SMALL END OF THE FEATURE UNLESS OTHERWISE SPECIFIED.
6. 1 DEGREE DRAFT IN THE DIRECTION OF PULL IS PERMISSIBLE UNLESS OTHERWISED SPECIFIED.
7. MATERIAL / COLOR: ABS PLASTIC IS STANDARD IN BLACK OR WHITE. CUSTOM MATERIALS AND COLORS ARE AVAILABLE UPON REQUEST FOR QUOTE.
8. PCB SIZES ARE RECOMMENDATIONS ONLY. FINAL SIZES AND VERIFICATION OF ITS FIT ARE THE SOLE RESPONSIBILITY OF EACH CUSTOMER.
9. ASSEMBLY HARDWARE PROVIDED. BATTERY CONTACTS SOLD SEPERATELY
10. THIS DRAWING IS BASED ON A SOLID MODEL, AND IS FURTHER DEFINED BY THE SOLID MODEL FILE.

R E V I S I O N

REV.	DRAWN BY	ECO No	DESCRIPTION	DATE	APPROVED
1	M BOYER		PRELIMINARY RELEASE	16-Mar-2009	D.C.
2	M BOYER	2109	UPDATE MODEL, ADD DRAFT AND FORMAT	18-Apr-2009	D.C.
3	M BOYER	4309	ADD SURFACE CALLOUT AND MODIFY HATCH	14-Dec-2009	D.C.
3.1	M BOYER	0710	UPDATE FORMAT	20-Mar-2010	D.C.
4.0	M BOYER	1210	ADD CORING IN REAR	04-May-2010	D.C.
4.1	M BOYER	2810	UPDATE VIEWS AND 2ND-OP PAGE	28-Jul-2010	D.C.
5.0	R CRUZ	7713	ADD "TALL" CONFIGURATION	01-Nov-2013	D.C.
6.0	R CRUZ	2214	INCLUDE WALL CRADLE OPTION	19-May-2014	D.C.
7.0	M BOYER	0814	CHANGE TEXTURE CALLOUT	21-May-2014	D.C.
7.1	R CRUZ	0361	UPDATE WALL CRADLE DIMENSIONS TO AS BUILT	18-Jun-2014	D.C.
8.0	M BOYER	5214	REMOVE TALL CONFIG AND INCLUDE PCB NOTCH	15-Dec-2014	

251510(x) CONFIGURATIONS			
	-Blank	-K	-WP
251510 COVER	1	1	
251510 BASE	1		
251510 MACHINED BASE		1	
251510 HATCH	1	1	
251510 WALL CRADLE		1	1
#2 HiLo SCREW .375"	4	4	

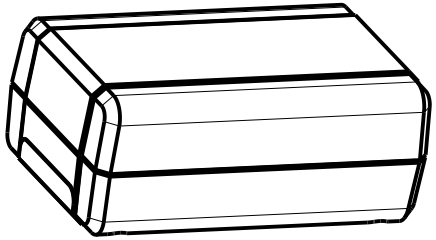

STANDARD 251510
SCALE 0.750

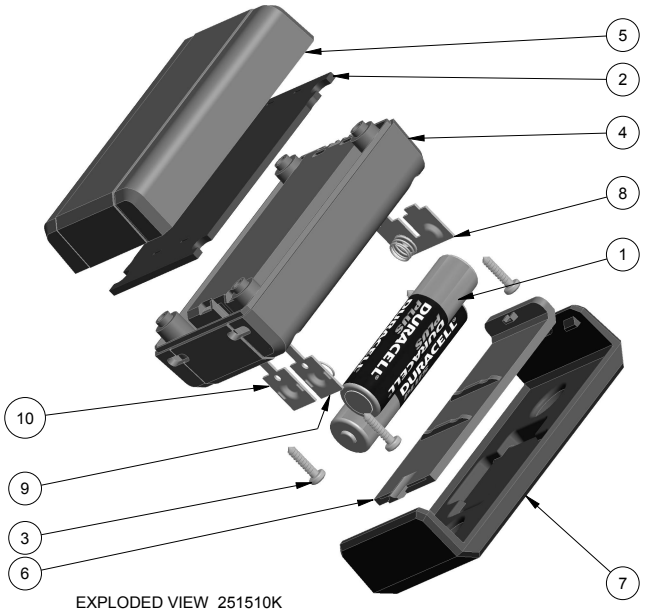

EXPLODED VIEW 251510K
SCALE 0.600

ITEM	FILE NAME	DESCRIPTION	MATERIAL	COLOR	QTY.
10	AAA-SINGL-CONTACT-POS	ACC-AAAPOS-5226	SPRING STEEL	SOLD SEPERATELY	1
9	AAA-SINGL-CONTACT-NEG	ACC-AAANEG-5204	SPRING STEEL	SOLD SEPERATELY	1
8	AAA-DBL-CONTACT	ACC-AAADBL-5214L	SPRING STEEL	SOLD SEPERATELY	1
7	251510_WALL-CRADLE	251510 WALL CRADLE - STANDARD	ABS	BLACK or WHITE	1
6	251510_HATCH	251510 HATCH - STANDARD	ABS	BLACK or WHITE	1
5	251510_COVER	251510 COVER - STANDARD	ABS	BLACK or WHITE	1
4	251510_BASE	251510 BASE - STANDARD	ABS	BLACK or WHITE	1
3	NO_2_HI-LO_SCREW	No2 HI-LO x .375"	STEEL	3/8" LONG	4
2	251510_PCB	REFERENCE ONLY	CUSTOMER SUPPLIED	.062" THICK	1
1	AAA-BATTERY	REFERENCE ONLY	CUSTOMER SUPPLIED	"AAA" SIZE	2

BILL OF MATERIALS

THIRD ANGLE PROJECTION

DO NOT SCALE DRAWING

NOTICE: THE INFORMATION AND DATA CONTAINED HEREIN IS CONSIDERED PROPRIETARY TO ALLTEC INTEGRATED MFG INC & SHALL REMAIN THE EXCLUSIVE PROPERTY OF ALLTEC INTEGRATED MFG INC THE HOLDER WILL ASSUME CUSTODY AND CONTROL THAT THIS DOCUMENT WILL NOT BE COPIED, REPRODUCED, OR DISCLOSED WITHOUT THE EXPRESS WRITTEN CONSENT OF ALLTEC INTEGRATED MFG INC POSSESSION OF THIS DOCUMENT DOES NOT CONSTITUTE A GRANT TO MANUFACTURE ANY ITEMS.
© 2014

TOLERANCES: UNLESS OTHERWISE SPECIFIED DIMENSIONS ARE IN U.S. INCHES.
X.XX = .015 X.XXXX = .001
X.XXX = .010 X.X° = 1°

NEW AGE ENCLOSURES

Customer's Part No: 251510

APPROVAL	BY	DATE
CHECK		
ENG.		
SCALE	AS NOTED	
DRAWN BY	M BOYER	16-Mar-2009

NEW AGE ENCLOSURES
4330 Santa Fe Road San Luis Obispo, CA. 93401
ph. (805) 595-1310 fax (805) 595-1024
www.newageenclosures.com

STANDARD - MINI AAA SXX-251510X ASSEMBLY

SIZE	DRAWING NAME	SHEET	REV.DOC
A	251510_R8_0	1 OF 8	8.0

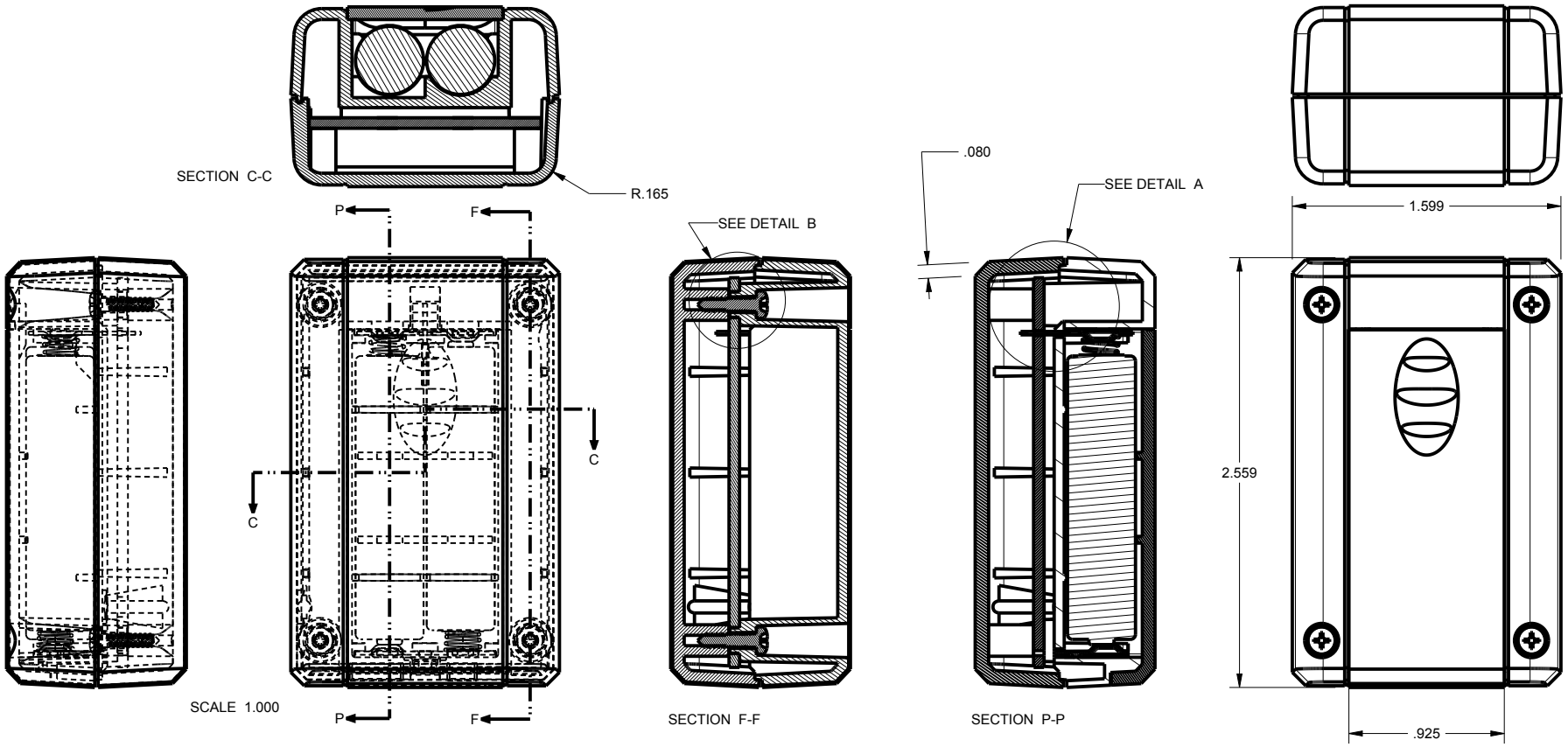

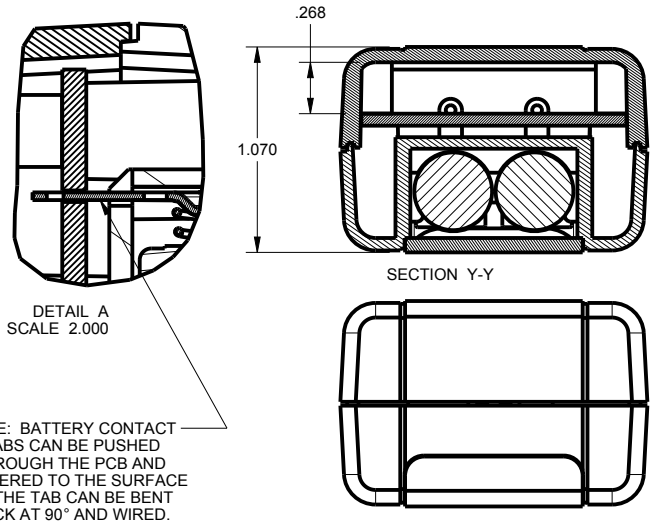

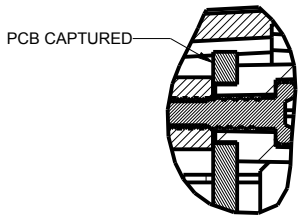

TOLERANCES: UNLESS OTHERWISE SPECIFIED DIMENSIONS ARE IN U.S. INCHES.
X.XX = .015 X.XXXX = .001
X.XXX = .010 X.X° = 1°

NEW AGE ENCLOSURES

Customer's Part No: 251510

APPROVAL	BY	DATE
CHECK		
ENG.		
SCALE	AS NOTED	

NEW AGE ENCLOSURES
4330 Santa Fe Road San Luis Obispo, CA. 93401
ph. (805) 595-1310 fax (805) 595-1024
www.newageenclosures.com

STANDARD - MINI AAA SXX-251510X ASSEMBLY

DRAWN BY	SIZE	DRAWING NAME	SHEET	REV.DOC
M BOYER 16-Mar-2009	A	251510_R8_0	2 OF 8	8.0

S251510 - COVER

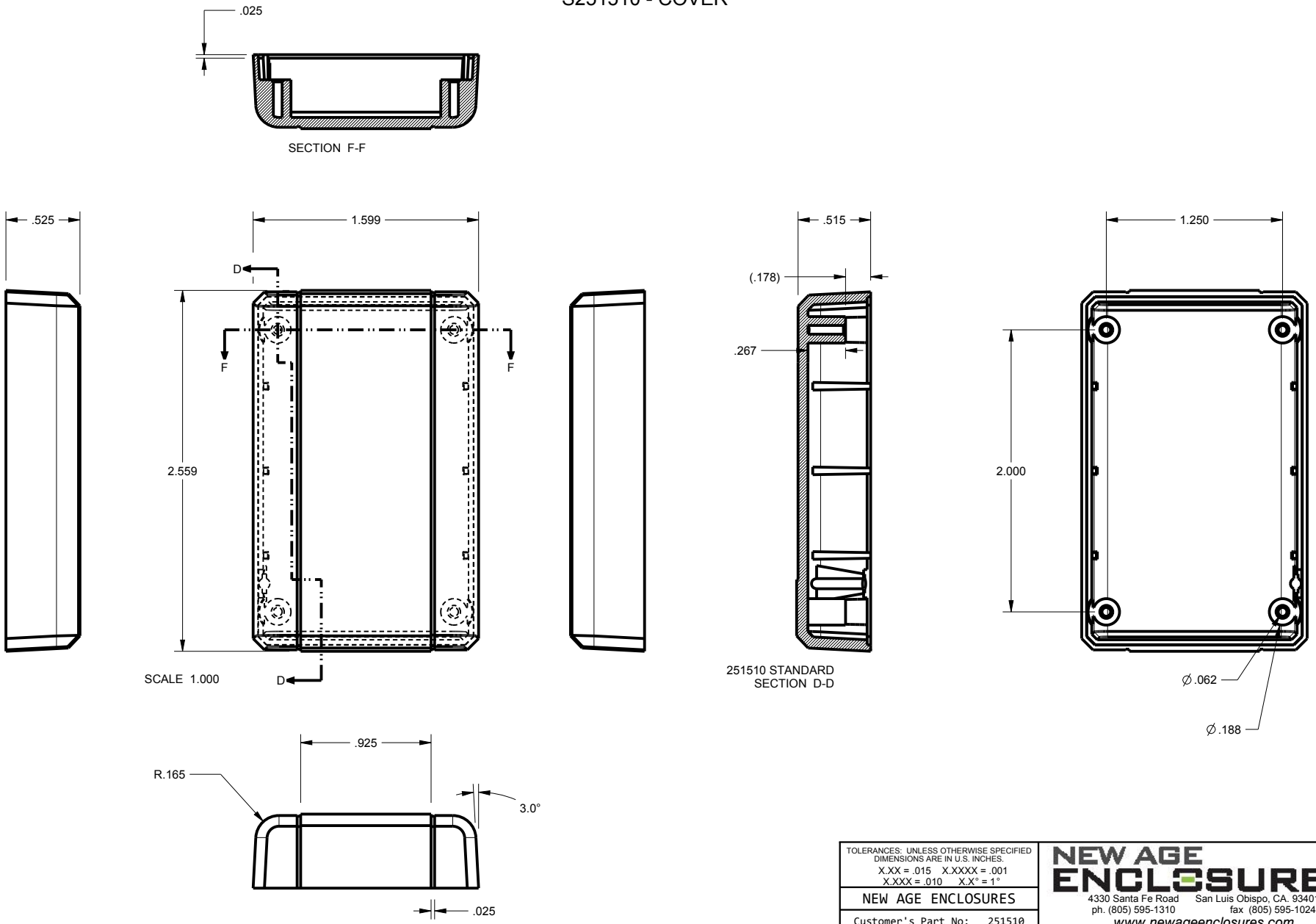

TOLERANCES: UNLESS OTHERWISE SPECIFIED DIMENSIONS ARE IN U.S. INCHES. X.XX = .015 X.XXXX = .001 X.XXX = .010 X.X° = 1°		NEW AGE ENCLOSURES 4330 Santa Fe Road San Luis Obispo, CA. 93401 ph. (805) 595-1310 fax (805) 595-1024 www.newageenclosures.com	
NEW AGE ENCLOSURES			
Customer's Part No: 251510			
APPROVAL	BY DATE	STANDARD - MINI AAA SXX-251510X ASSEMBLY	
CHECK			
ENG.			
SCALE	AS NOTED		
DRAWN BY M BOYER 16-Mar-2009	SIZE A	DRAWING NAME 251510_R8_0	SHEET 3 OF 8 / REV.DOC 8.0

S251510 - BASE

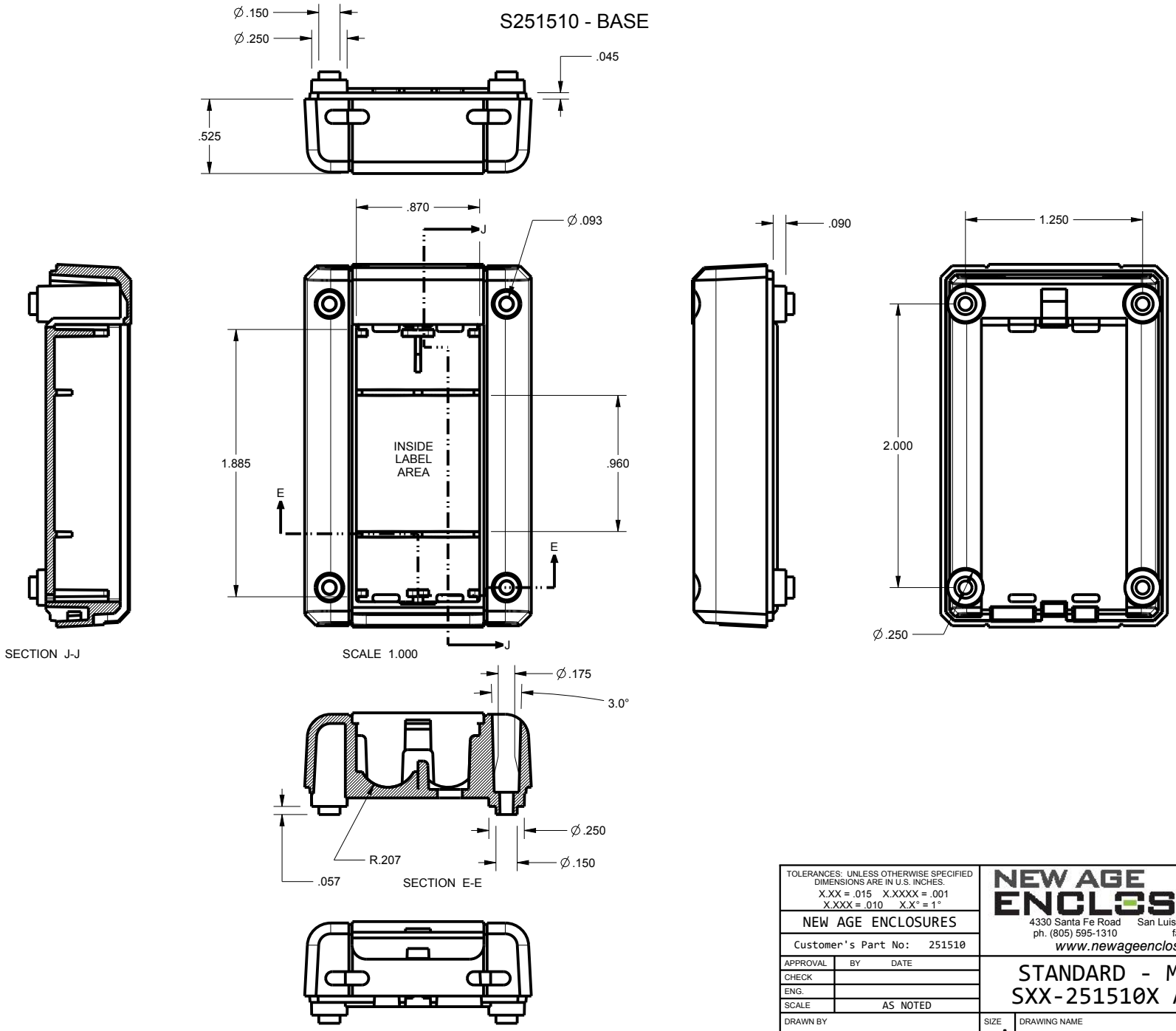

TOLERANCES: UNLESS OTHERWISE SPECIFIED DIMENSIONS ARE IN U.S. INCHES. X.XX = .015 X.XXXX = .001 X.XXX = .010 X.X° = 1°		NEW AGE ENCLOSURES 4330 Santa Fe Road San Luis Obispo, CA. 93401 ph. (805) 595-1310 fax (805) 595-1024 www.newageenclosures.com	
NEW AGE ENCLOSURES			
Customer's Part No: 251510			
APPROVAL	BY DATE	STANDARD - MINI AAA SXX-251510X ASSEMBLY	
CHECK			
ENG.			
SCALE	AS NOTED		
DRAWN BY M BOYER 16-Mar-2009	SIZE A	DRAWING NAME 251510_R8_0	SHEET 4 OF 8 / REV.DOC 8.0

S251510 - WALL CRADLE

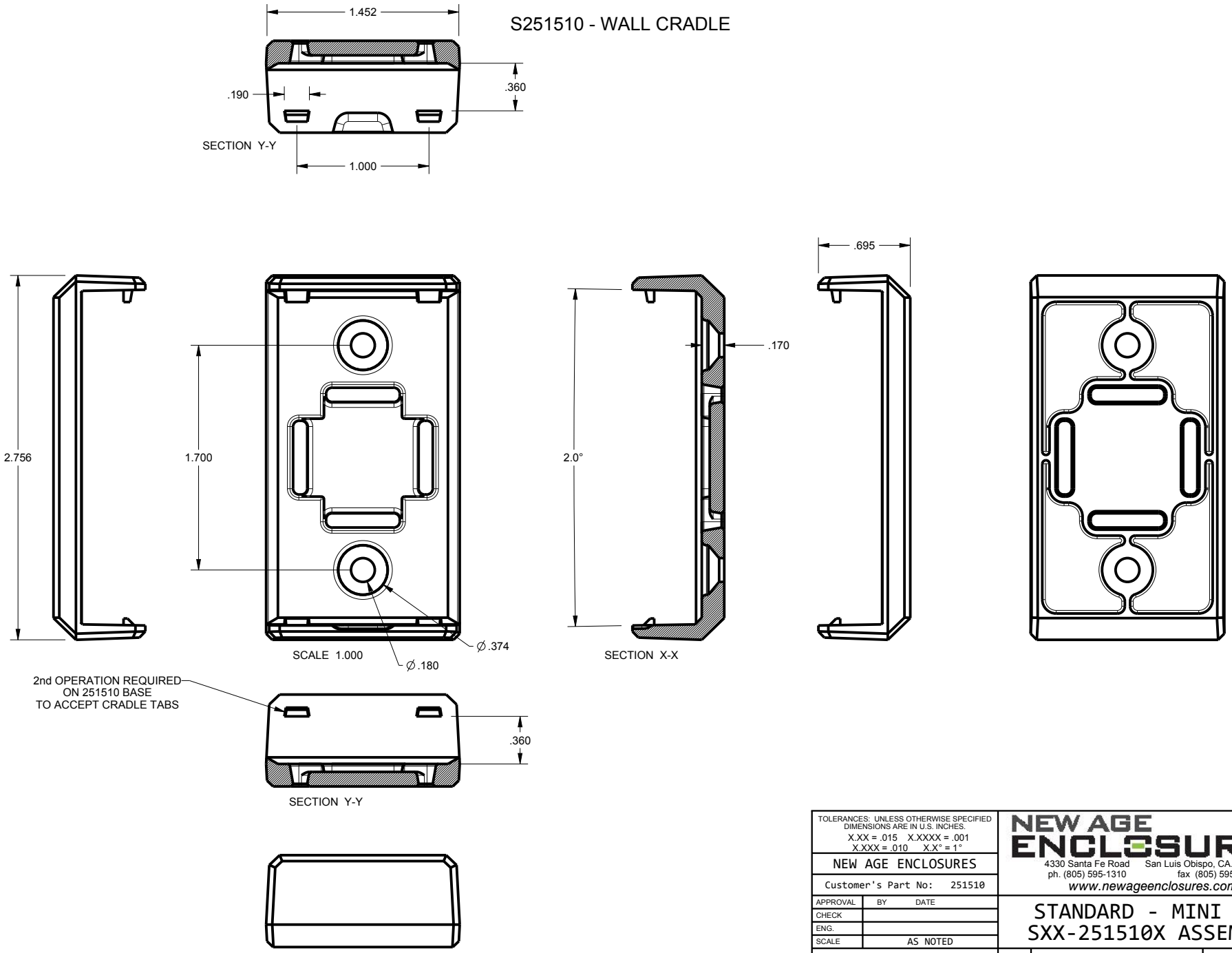

TOLERANCES: UNLESS OTHERWISE SPECIFIED DIMENSIONS ARE IN U.S. INCHES.
X.XX = .015 X.XXXX = .001
X.XXX = .010 X.X° = 1°

NEW AGE ENCLOSURES

Customer's Part No: 251510

APPROVAL	BY	DATE
CHECK		
ENG.		
SCALE	AS NOTED	

DRAWN BY: M BOYER 16-Mar-2009

NEW AGE ENCLOSURES
4330 Santa Fe Road San Luis Obispo, CA. 93401
ph. (805) 595-1310 fax (805) 595-1024
www.newageenclosures.com

STANDARD - MINI AAA
SXX-251510X ASSEMBLY

SIZE	DRAWING NAME	SHEET	REV.DOC
A	251510_R8_0	5 OF 8	8.0

S251510 - PCB

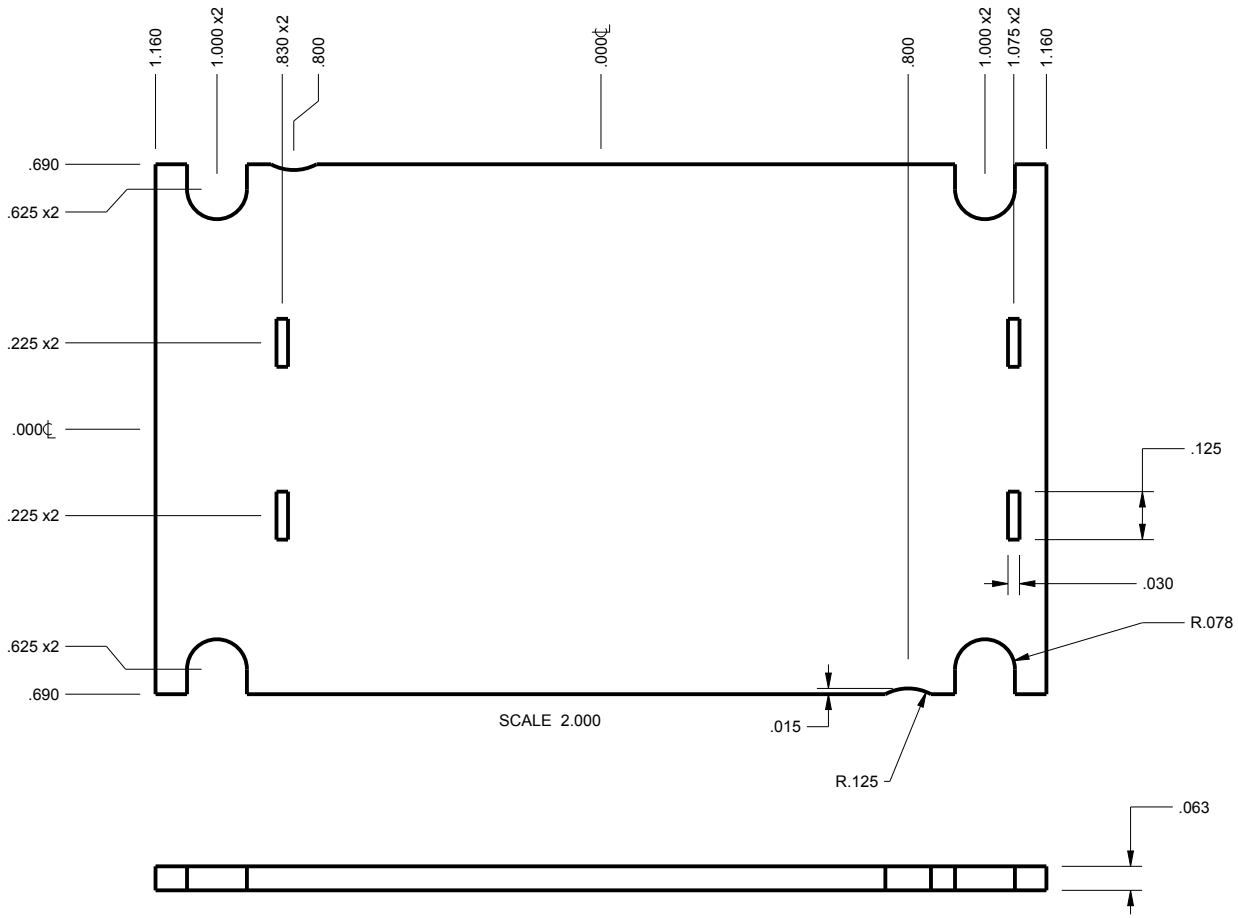

NOTE
1. BATTERY CONNECTION POINTS SHOWN AT BOTH ENDS TO ALLOW ALTERNATE ASSEMBLY OPTION.

TOLERANCES: UNLESS OTHERWISE SPECIFIED DIMENSIONS ARE IN U.S. INCHES. X.XX = .015 X.XXXX = .001 X.XXX = .010 X.X° = 1°		NEW AGE ENCLOSURES 4330 Santa Fe Road San Luis Obispo, CA. 93401 ph. (805) 595-1310 fax (805) 595-1024 www.newageenclosures.com			
NEW AGE ENCLOSURES					
Customer's Part No: 251510					
APPROVAL	BY DATE	STANDARD - MINI AAA SXX-251510X ASSEMBLY			
CHECK					
ENG.					
SCALE	AS NOTED				
DRAWN BY M BOYER 16-Mar-2009		SIZE A	DRAWING NAME 251510_R8_0	SHEET 6 OF 8	REV.DOC 8.0

2nd OPERATION DETAILS (PAGE 1 OF 2)

NEW AGE ENCLOSURES DELIVERS YOUR ENCLOSURE MARKET-READY WITH IN-HOUSE
CNC MACHINING, PAD PRINTING, ASSEMBLY, AND FULFILLEMENT.
ALL SURFACES AND AREAS ARE AVAILABLE FOR CNC ALTERATION BY NEW AGE ENCLOSURES
CALL (805) 595-1310 FOR PRICING AND SCHEDULE.
THE INSIDE RADIUS OF ANY MACHINED FEATURES SHOULD BE NO SMALLER THAN .031"

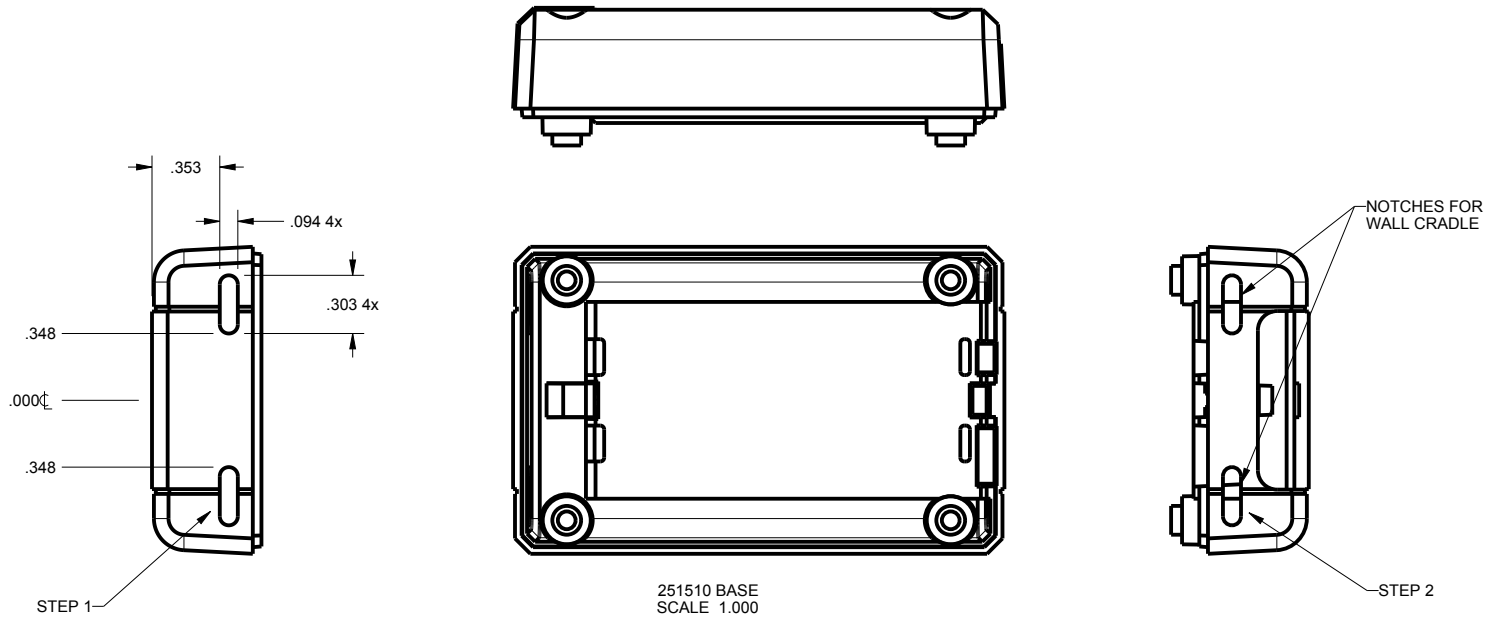

SXX-251510X-XXX BASE - ABS, BLACK

STEP NO	DESCRIPTION	CUTTER	FIXTURE	ORIENTATION	PROGRAM
1-B-C1	CRADLE NOTCHES	T2 = .062" EM	190	SINGLE	-
2-B-C2	CRADLE NOTCHES	T2 = .062" EM	190	SINGLE	-

TOLERANCES: UNLESS OTHERWISE SPECIFIED DIMENSIONS ARE IN U.S. INCHES.
X.XX = .015 X.XXXX = .001
X.XXX = .010 X.X° = 1°

NEW AGE ENCLOSURES

Customer's Part No: 251510

APPROVAL	BY	DATE
CHECK		
ENG.		
SCALE	AS NOTED	

DRAWN BY M BOYER 16-Mar-2009

NEW AGE ENCLOSURES
4330 Santa Fe Road San Luis Obispo, CA. 93401
ph. (805) 595-1310 fax (805) 595-1024
www.newageenclosures.com

STANDARD - MINI AAA
SXX-251510X ASSEMBLY

SIZE	DRAWING NAME	SHEET	REV.DOC
A	251510_R8_0	7 OF 8	8.0

2nd OPERATION DETAILS (PAGE 2 OF 2)

NEW AGE ENCLOSURES DELIVERS YOUR ENCLOSURE MARKET-READY WITH IN-HOUSE
CNC MACHINING, PAD PRINTING, ASSEMBLY, AND FULFILLEMENT.
ALL SURFACES AND AREAS ARE AVAILABLE FOR CNC ALTERATION BY NEW AGE ENCLOSURES
CALL (805) 595-1310 FOR PRICING AND SCHEDULE.
THE INSIDE RADIUS OF ANY MACHINED FEATURES SHOULD BE NO SMALLER THAN .031"

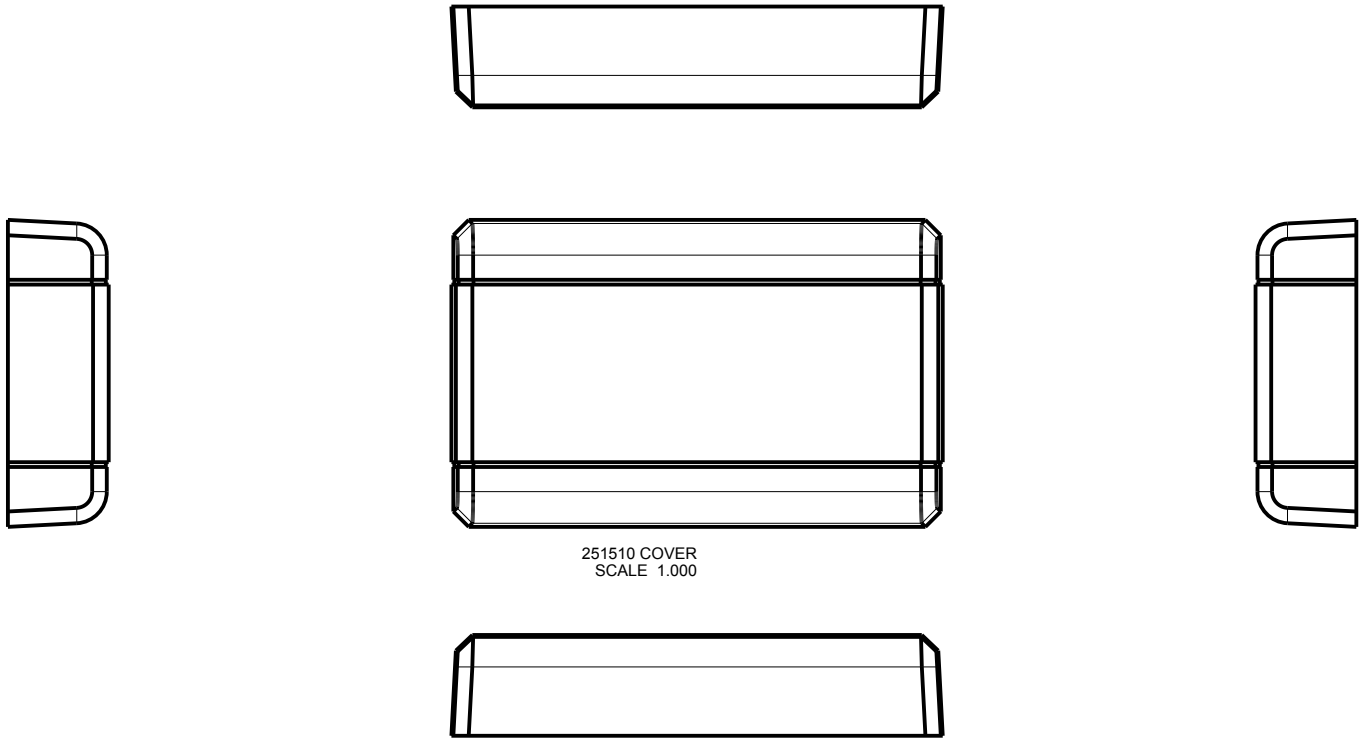

251510 COVER
SCALE 1.000

SXX-251510X-XXX COVER - ABS, BLACK

STEP NO	DESCRIPTION	CUTTER	FIXTURE	ORIENTATION	PROGRAM
1-C-C1	-	T2 = .062" EM	190	-	-
2-C-C2	-	T2 = .062" EM	190	-	-

TOLERANCES: UNLESS OTHERWISE SPECIFIED DIMENSIONS ARE IN U.S. INCHES.
X.XX = .015 X.XXXX = .001
X.XXX = .010 X.X° = 1°

NEW AGE ENCLOSURES

Customer's Part No: 251510

APPROVAL	BY	DATE
CHECK		
ENG.		
SCALE	AS NOTED	

DRAWN BY M BOYER 16-Mar-2009

NEW AGE ENCLOSURES
4330 Santa Fe Road San Luis Obispo, CA. 93401
ph. (805) 595-1310 fax (805) 595-1024
www.newageenclosures.com

STANDARD - MINI AAA
SXX-251510X ASSEMBLY

SIZE	DRAWING NAME	SHEET	REV.DOC
A	251510_R8_0	8 OF 8	8.0

Mouser Electronics

Authorized Distributor

Click to View Pricing, Inventory, Delivery & Lifecycle Information:

New Age Enclosures:

S1A-251510 S3A-251510 S3A-251510-K S1A-251510-K

Общество с ограниченной ответственностью «МосЧип» ИНН 7719860671 / КПП 771901001
Адрес: 105318, г.Москва, ул.Щербаковская д.3, офис 1107

Данный компонент на территории Российской Федерации

Вы можете приобрести в компании MosChip.

Для оперативного оформления запроса Вам необходимо перейти по данной ссылке:

http://moschip.ru/get-element

Вы можете разместить у нас заказ для любого Вашего проекта, будь то серийное производство или разработка единичного прибора.

В нашем ассортименте представлены ведущие мировые производители активных и пассивных электронных компонентов.

Нашей специализацией является поставка электронной компонентной базы двойного назначения, продукции таких производителей как XILINX, Intel (ex.ALTERA), Vicor, Microchip, Texas Instruments, Analog Devices, Mini-Circuits, Amphenol, Glenair.

Сотрудничество с глобальными дистрибьюторами электронных компонентов, предоставляет возможность заказывать и получать с международных складов практически любой перечень компонентов в оптимальные для Вас сроки.

На всех этапах разработки и производства наши партнеры могут получить квалифицированную поддержку опытных инженеров.

Система менеджмента качества компании отвечает требованиям в соответствии с ГОСТ Р ИСО 9001, ГОСТ РВ 0015-002 и ЭС РД 009

Офис по работе с юридическими лицами:

105318, г.Москва, ул.Щербаковская д.3, офис 1107, 1118, ДЦ «Щербаковский»

Телефон: +7 495 668-12-70 (многоканальный)

Факс: +7 495 668-12-70 (доб.304)

E-mail: info@moschip.ru

Skype отдела продаж:
moschip.ru
moschip.ru_4
moschip.ru_6
moschip.ru_9