Data Sheet, Rev. 2
July 2001

Wavelength-Selected High-Power D2587P-Type (with Wavelength Locker)/D2547P-Type Isolated DFB Laser Modules

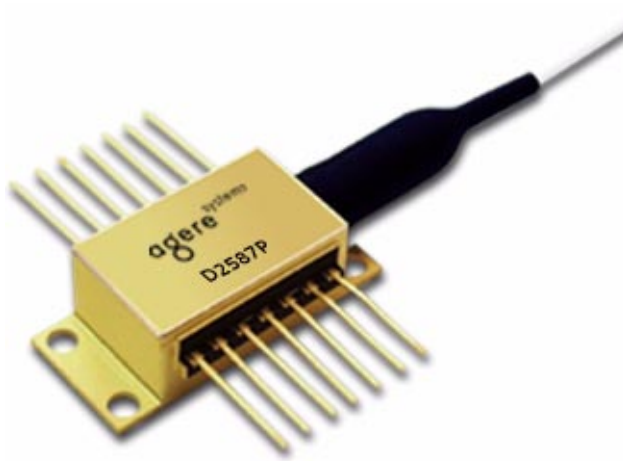

Featuring wavelength selection and locking capabilities, the D2587P Laser Module is ideally suited for use with external lithium niobate modulators, and in high-power (20 mW) applications.

Features

- High-performance, multiquantum-well (MQW), distributed-feedback (DFB) laser
- D2587P-Type is offered on 50 GHz ITU grid wavelengths ranging from 1528.77 nm—1610.06 nm
- D2547P-Type is offered on 100 GHz ITU grid wavelengths ranging from 1528.77 nm—1610.06 nm
- Polarization-maintaining fiber pigtail
- For use with lithium niobate modulators
- High optical power (20 mW, CW)
- Hermetic, 14-pin package

Applications

- Telecommunications:
  — Dense WDM
  — SONET/SDH OC-192/STM-64
  — Extended and ultralong reach
  — Undersea systems
- Digital video

Description

The D2587P-Type DFB laser module is designed for use with an external lithium niobate modulator and also in applications where high power (20 mW) is required.

The use of an internal wavelength locker greatly enhances long-term reliability and reduces chirp and mode dispersion when used in conjunction with LN modulators at OC-192 data rates.

A companion device, the D2547P high-power DFB laser module, is also designed for use with a lithium niobate external modulator, but without the use of an internal wavelength locker.

Description (continued)

Principles of Operation (Controlled Wavelength)

The single-channel, wavelength-selected DFB (ILM) package contains internal wavelength-discriminating optics, i.e., two etalons and associated photodiodes. The output consists of analog signals suitable for controlling the electrical current of the thermoelectric cooler (TEC) and the DFB laser.

Controlled Feedback

The module contains an internal optical isolator that suppresses optical feedback in laser-based, fiber-optic systems. Light reflected back to the laser is attenuated a minimum of 30 dB.

Controlled Temperature

An integral TEC provides stable thermal characteristics. The TEC allows for heating and cooling of the laser chip to maintain a temperature of 25 °C for case temperatures from –25 °C to +70 °C. The laser temperature is monitored by the internal thermistor, which can be used with external circuitry to control the laser chip temperature.

Controlled Power

An internal, InGaAs, PIN photodiode functions as the back-facet monitor. The photodiode monitors emission from the rear facet of the laser and, when used in conjunction with control circuitry, can control optical power launched into the fiber. Normally, this configuration is used in a feedback arrangement to maintain consistent laser output power.

Standard Package

The laser module is fabricated in a 14-pin, hermetic, metal/ceramic butterfly package that incorporates a bias tee that separates the dc-bias path from the RF input. The RF input has a nominal 25 Ω impedance.

The laser module is equipped with *Fujikura** polarization-maintaining fiber (PMF). The fiber is PANDA type and is the same fiber that is used on the Agere Systems Inc. lithium niobate modulators. It has a mode field diameter of 10.5 μm, a cladding diameter of 125 μm ±3 μm, and a loose tube jacketed fiber 900 μm in diameter. Figure 1 shows the orientation of polarization in the fiber.

Agere Systems' optoelectronic components are being qualified to rigorous internal standards that are consistent with *Telcordia Technologies*† TR-NWT-000468. All design and manufacturing operations are *ISO*§ 9001 certified. The module is being fully qualified for central office applications.

* *Fujikura* is a registered trademark of Fujikura Ltd.
† *Telcordia Technologies* is a trademark of Telcordia Technologies Inc.
§ *ISO* is a registered trademark of The International Organization for Standardization.

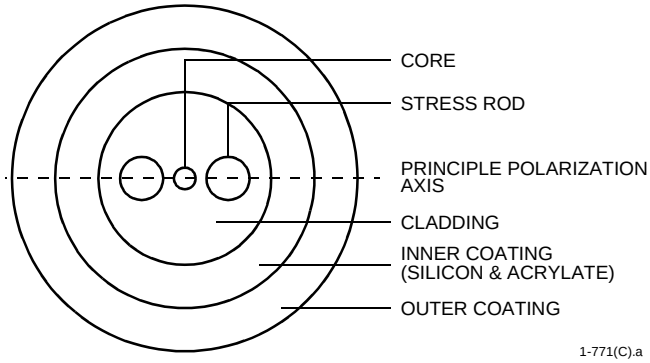

Figure 1. Polarization-Maintaining Fiber

Pin Information

Table 1. Pin Descriptions

Pin	D2587P-Type	D2547P-Type
1	Thermistor	Thermistor
2	Thermistor	Thermistor
3	Laser dc Bias (Cathode) (–)	Laser dc Bias (Cathode) (–)
4	Back-facet Monitor Anode (–)	Back-facet Monitor Anode (–)
5	Back-facet Monitor Cathode (+)	Back-facet Monitor Cathode (+)
6	TEC (+)[1]	TEC (+)[1]
7	TEC (–)[1]	TEC (–)[1]
8	Case Ground	Case Ground
9	λ Photodiode 2 Anode	Case Ground
10	λ Photodiode 1 Anode	Case Ground
11	Laser Anode (+)[2]	Laser Anode (+)[2]
12	RF Laser Input Cathode (–)	RF Laser Input Cathode (–)
13	Laser Anode (+)[2]	Laser Anode (+)[2]
14	NC	Case Ground

1. A positive current through the thermoelectric heat pump cools the laser.
2. Both leads should be grounded for optimum performance.

Description (continued)

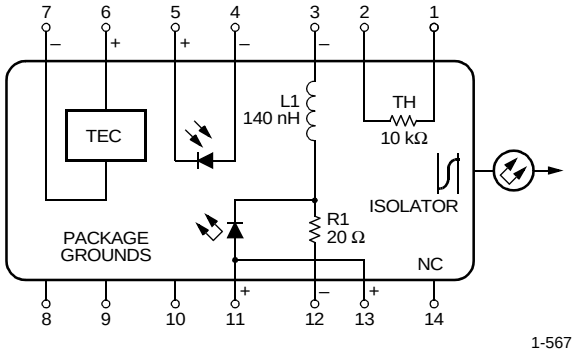

Top view.

Figure 2. D2547P Circuit Schematic

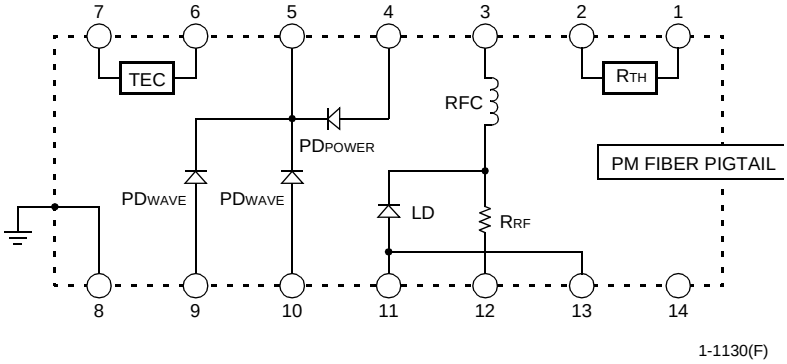

Figure 3. D2587P Circuit Schematic

Block Diagram

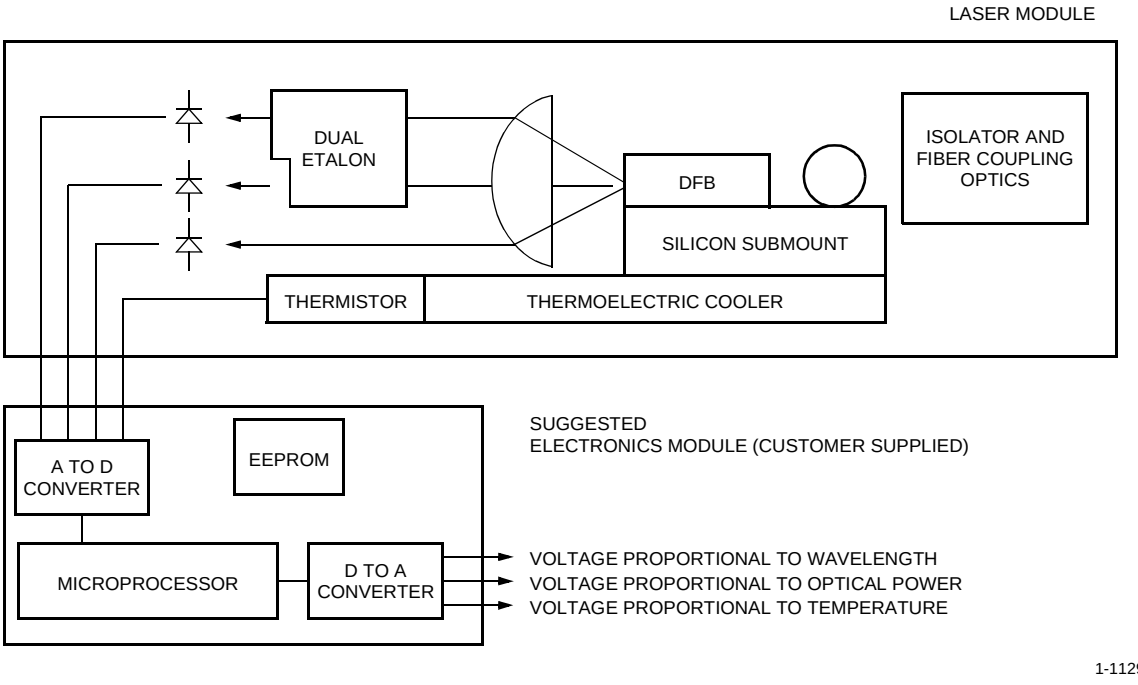

Absolute Maximum Ratings

Stresses in excess of the absolute maximum ratings can cause permanent damage to the device. These are absolute stress ratings only. Functional operation of the device is not implied at these or any other conditions in excess of those given in the operations sections of the data sheet. Exposure to absolute maximum ratings for extended periods can adversely affect device reliability.

Parameter	Symbol	Min	Max	Unit
Laser Reverse Voltage	V_{RLMAX}	—	2	V
dc Forward Current	I_{FLMAX}	—	225	mA
Operating Case Temperature Range	T_C	–25	70	°C
Storage Case Temperature Range*	T_{stg}	–40	70	°C
Photodiode Reverse Voltage	V_{RPDMAX}	—	10	V
Photodiode Forward Current	I_{FPDMAX}	—	2	mA

* Does not apply to shipping container.

Handling Precautions

Power Sequencing

To avoid the possibility of damage to the laser module from power supply switching transients, follow this turn-on sequence:

1. All ground connections
2. Most negative supply
3. Most positive supply
4. All remaining connections

Reverse the order for the proper turn-off sequence.

Electrostatic Discharge

CAUTION: This device is susceptible to damage as a result of electrostatic discharge. Take proper precautions during both handling and testing. Follow guidelines such as JEDEC Publication No. 108-A (Dec. 1988).

Agere Systems employs a human-body model (HBM) for ESD-susceptibility testing and protection-design evaluation. ESD voltage thresholds are dependent on the critical parameters used to define the model. A standard HBM (resistance = 1.5 kΩ, capacitance = 100 pF) is widely used and, therefore, can be used for comparison purposes. The HBM ESD threshold presented here was obtained using these circuit parameters:

Parameter	Value	Unit
Human-body Model	>400	V

Mounting Instructions

The minimum fiber bend radius is 1.0 in. (25.4 mm)

To avoid degradation in performance, mount the module on the board as follows:

1. Place the bottom flange of the module on a flat heat sink at least 0.5 in. x 1.180 in. (12.7 mm x 30 mm) in size. The surface finish of the heat sink should be better than 32 µin. (0.8 µm), and the surface flatness must be better than 0.001 in. (25.4 µm). Using thermal conductive grease is optional; however, thermal performance can be improved by up to 5% if conductive grease is applied between the bottom flange and the heat sink.
2. Mount four #2-56 screws with Fillister heads (M2-3 mm) at the four screw hole locations (see Outline Diagram). The Fillister head diameter must not exceed 0.140 in. (3.55 mm). Do not apply more than 1 in.-lb. of torque to the screws.

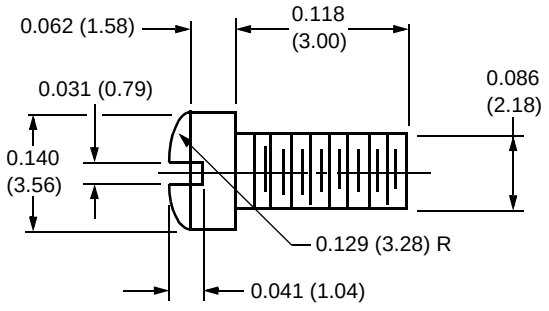

1-532(C)

Note: Dimensions are in inches and (millimeters).

Figure 4. Fillister Head Screw

Characteristics

Minimum and maximum values are testing requirements. Typical values are device characteristics and are results of engineering evaluations; they are for information purposes only and are not part of the testing requirements.

Table 2. D2587-Type Electrical Characteristics (at 25 °C laser temperature)

Parameter	Symbol	Test Conditions	Min	Typ	Max	Unit
Threshold Current	I_{TH}	—	—	15	40	mA
Drive Current	—	L_F = 20 mW	—	—	165	mA
Laser Forward Voltage	V_{LF}	L_F = 20 mW (CW)	—	2	2.5	V
Monitor Reverse-bias Voltage*	V_{RMON}	—	3	5	10	V
Monitor Current:		P_O = 20 mW (CW)				
Back-facet Monitor	I_{RMON}		0.003	—	0.06	mA
λ Photodiode 1	$I_{\lambda PD1}$		0.003	—	0.06	mA
λ Photodiode 2	$I_{\lambda PD2}$		0.003	—	0.06	mA
Monitor Dark Current	I_D	I_F = 0, V_{RMON} = 5 V	—	0.01	0.1	µA
Input Impedance	Z_{IN}	—	—	25	—	Ω
Filter Slope	—	—	0.5	—	8	ℓ/nm
Frequency Capture Range	—	Measured from λ_{ITU} toward increasing λ and decreasing λ	15	—	—	GHz
Thermistor Current	I_{TC}	—	10	—	100	µA
Resistance Ratio†	—	—	9.1	9.6	10.1	—
Thermistor Resistance	R_{TH}	T_L = 25 °C	9.5	—	10.5	kΩ
Laser Submount Temperature	T_{SET}	—	20	—	35	°C
TEC Current	I_{TEC}	T_L = 25 °C, T_C = 70 °C	—	—	1.7	A
TEC Voltage	V_{TEC}	T_L = 25 °C, T_C = 70 °C	—	—	2.8	V
TEC Capacity	ΔT	T_C = 70 °C	—		50	°C

* Standard operating condition is 5.0 V reverse bias.
† Ratio of thermistor resistance at 0 °C to thermistor resistance at 50 °C.

Table 3. D2587-Type Optical Characteristics (at 25 °C laser temperature)

Parameter	Symbol	Test Conditions	Min	Typ	Max	Unit
Peak Optical Output Power	P_P	—	20.0	—	—	mW
Center Wavelength* (See Ordering Information, page 9.)	λ_C	$T_L = T_{SET}$ $\lambda_C = \lambda_{ITU} \pm 0.1$ nm	1528.77	—	1610.06	nm
Line Width (3 dB full width)	Δλ	CW, P_F = 20.0 mW	—	2	10	MHz
Side-mode Suppression Ratio	SMSR	CW	35	45	—	dB
Relative Intensity Noise	RIN	CW, P_F = 20 mW 200 MHz < f < 10 GHz	—	—	–135	dB/Hz
Optical Isolation	—	T_C = 0 °C to 75 °C	30	—	—	dB
Optical Polarization Extinction Ratio†	—	0 °C to 75 °C	20	—	—	dB
FM Efficiency	FM	f_{MOD} = 30 kHz, P_F = 20 mW	—	100	—	MHz/mA
Wavelength Drift (EOL)	$\Delta\lambda_C$	Tested over 25-year lifetime	—	—	±2.5	GHz

* Custom wavelengths available.
† The *ST*® ferrule key is not aligned to slow axis of fiber. Connector is intended for testing purposes only.

Characteristics (continued)

Minimum and maximum values are testing requirements. Typical values are device characteristics and are results of engineering evaluations; they are for information purposes only and are not part of the testing requirements.

Table 4. D2547P-Type Electrical Characteristics (at 25 °C laser temperature)

Parameter	Symbol	Test Conditions	Min	Typ	Max	Unit
Threshold Current	I_{TH}	—	—	15	40	mA
Drive Current	—	L_F = 20 mW	—	—	165	mA
Laser Forward Voltage	V_{LF}	L_F = 20 mW (CW)	—	2	2.5	V
Monitor Reverse-bias Voltage*	V_{RMON}	—	3	5	10	V
Back-facet Monitor Current:	I_{RMON}	P_O = 20 mW (CW)	0.2	—	—	mA
Monitor Dark Current	I_D	I_F = 0, V_{RMON} = 5 V	—	0.01	0.1	µA
Input Impedance	Z_{IN}	—	—	25	—	Ω
Thermistor Current	I_{TC}	—	10	—	100	µA
Resistance Ratio†	—	—	9.1	9.6	10.1	—
Thermistor Resistance	R_{TH}	T_L = 25 °C	9.5	—	10.5	kΩ
Laser Submount Temperature	T_{LASER}	—	20	—	35	°C
TEC Current	I_{TEC}	T_L = 25 °C, T_C = 70 °C	—	—	1.7	A
TEC Voltage	V_{TEC}	T_L = 25 °C, T_C = 70 °C	—	—	2.8	V
TEC Capacity	ΔT	T_C = 70 °C	—	—	50	°C

* Standard operating condition is 5.0 V reverse bias.
† Ratio of thermistor resistance at 0 °C to thermistor resistance at 50 °C.

Table 5. D2547P-Type Optical Characteristics (at 25 °C laser temperature)

Parameter	Symbol	Test Conditions	Min	Typ	Max	Unit
Peak Optical Output Power	P_P	—	20.0	—	—	mW
Center Wavelength* (See Ordering Information, page 12.)	λ_C	$T_L = T_{SET}$ $\lambda_C = \lambda_{ITU} \pm 0.1$ nm	1528.77	—	1610.06	nm
Line Width (3 dB full width)	$\Delta\lambda$	CW, P_F = 20.0 mW	—	2	10	MHz
Side-mode Suppression Ratio	SMSR	CW	35	45	—	dB
Relative Intensity Noise	RIN	CW, P_F = 20 mW 200 MHz < f < 10 GHz	—	—	–135	dB/Hz
Optical Isolation	—	T_C = 0 °C to 75 °C	30	—	—	dB
Optical Polarization Extinction Ratio†	—	0 °C to 75 °C	20	—	—	dB
FM Efficiency	FM	f_{MOD} = 30 kHz, P_F = 20 mW	—	100	—	MHz/mA
Wavelength Drift (EOL)	$\Delta\lambda_C$	Tested over 25-year lifetime	—	—	±0.1	nm

* Custom wavelengths available.
† The *ST* ferrule key is not aligned to slow axis of fiber. Connector is intended for testing purposes only.

Characteristics (continued)

Table 6. D2587P/D2547P Fiber Pigtail and Optical Connector Characteristics

Parameter	Symbol	Description	Min	Typ	Max	Unit
Pigtail Length	L	*Fujikura* PANDA or equivalent polarization-maintaining fiber	1.5	—	—	m
Connector Style	—	*ST* plug (FC/PC optional)	—	—	—	—

Outline Diagram

Dimensions are in inches and (millimeters). Tolerances are ±0.005 in. (±0.127 mm).

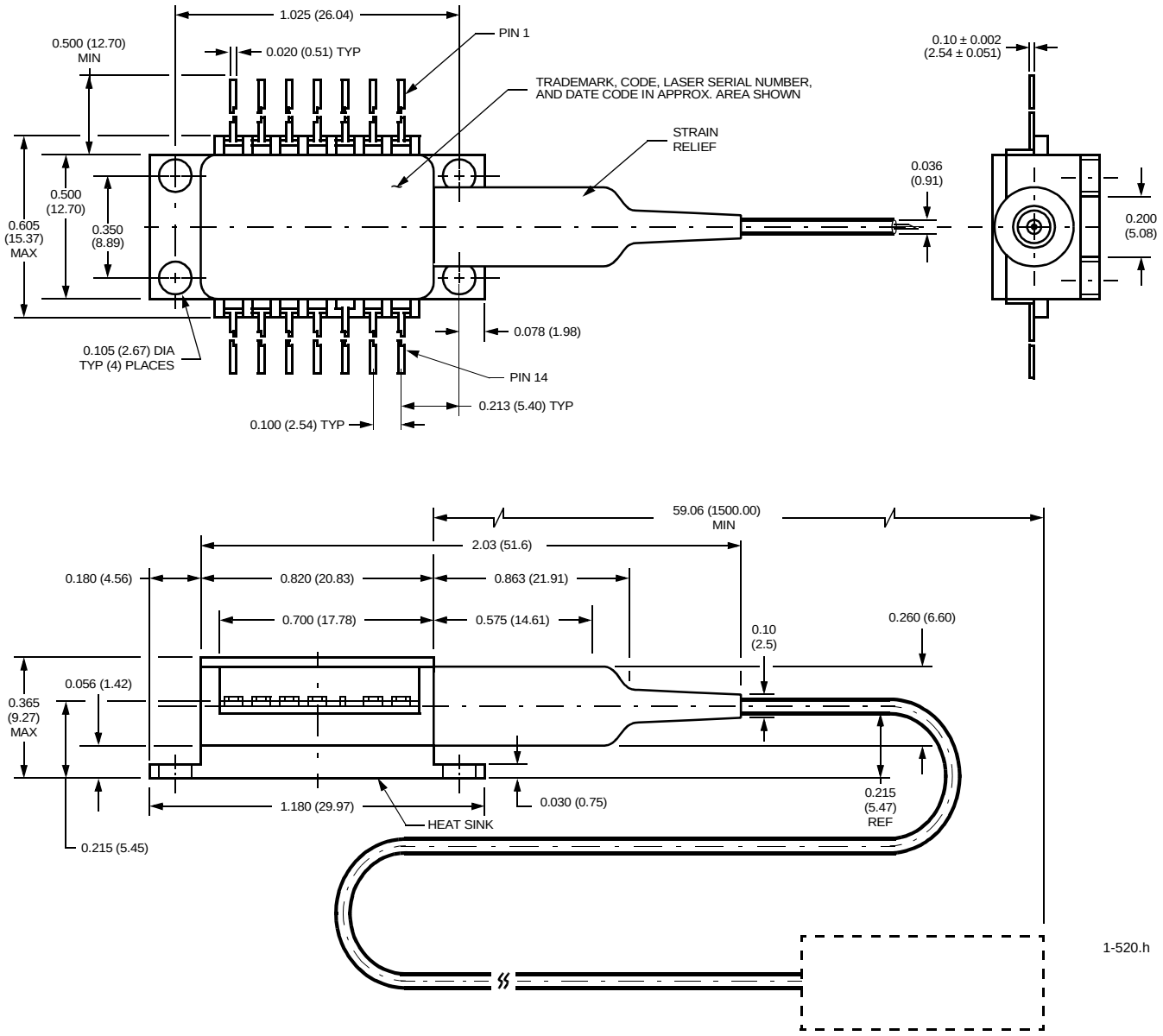

High-Power Product

Class IIIb Laser Product

FDA/CDRH Class IIIb laser product. All versions are Class IIIb laser products per CDRH, 21 CFR 1040 Laser Safety requirements. The device has been classified with the FDA under accession number 8720010.

This product complies with 21 CFR 1040.10 and 1040.11.
8 µm/125 µm ±3 µm single-mode fiber with 900 µm loose-tube jacketed fiber and connector
Wavelength = 1.5 µm
Maximum power = 40 mW
Because of size constraints, laser safety labeling (including an FDA Class IIIb label) is not affixed to the module but attached to the outside of the shipping carton.
Product is not shipped with power supply.

Caution: Use of controls, adjustments, and procedures other than those specified herein may result in hazardous laser radiation exposure.

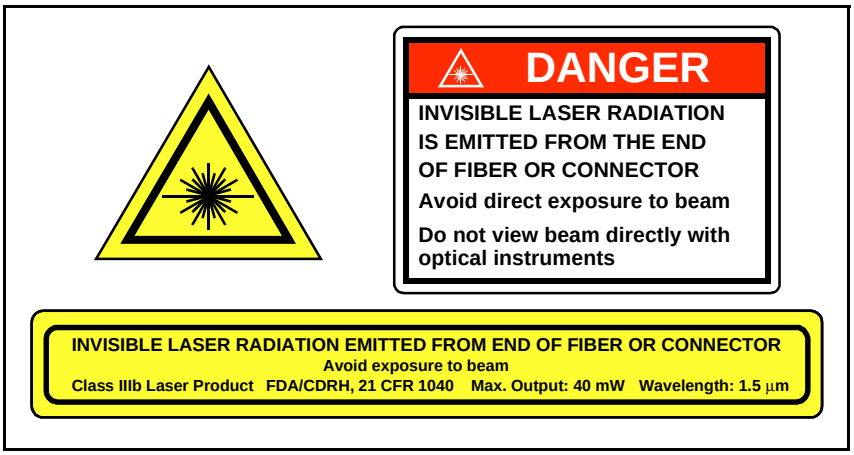

Ordering Information

Table 7. D2587P 20 mW CW Laser with Locker (C- and L-Band) Ordering Information

Device Code	ITU-T Frequency (THz)	Center Wavelength (nm)	Comcode	Device Code	ITU-T Frequency (THz)	Center Wavelength (nm)	Comcode
D2587P61	196.1	1528.77	108835422	D2587P41	194.1	1544.53	108835620
D2587P605	196.05	1529.16	108875220	D2587P405	194.05	1544.92	108875444
D2587P60	196.0	1529.55	108835430	D2587P40	194.0	1545.32	108835638
D2587P595	195.95	1529.94	108875238	D2587P395	193.95	1545.72	108875451
D2587P59	195.9	1530.33	108835448	D2587P39	193.9	1546.12	108835646
D2587P585	195.85	1530.72	108875246	D2587P385	193.85	1546.52	108875469
D2587P58	195.8	1531.12	108835455	D2587P38	193.8	1546.92	108835653
D2587P575	195.75	1531.51	108875253	D2587P375	193.75	1547.32	108875477
D2587P57	195.7	1531.90	108835463	D2587P37	193.7	1547.72	108835661
D2587P565	195.65	1532.29	108875261	D2587P365	193.65	1548.11	108875485
D2587P56	195.6	1532.68	108835471	D2587P36	193.6	1548.51	108835679
D2587P555	195.55	1533.07	108875279	D2587P355	193.55	1548.91	108875493
D2587P55	195.5	1533.47	108835489	D2587P35	193.5	1549.32	108835687
D2587P545	195.45	1533.86	108875287	D2587P345	193.45	1549.72	108875501
D2587P54	195.4	1534.25	108835497	D2587P34	193.4	1550.12	108835695
D2587P535	195.35	1534.64	108875303	D2587P335	193.35	1550.52	108875519
D2587P53	195.3	1535.04	108835505	D2587P33	193.3	1550.92	108835703
D2587P525	195.25	1535.43	108875311	D2587P325	193.25	1551.58	108875527
D2587P52	195.2	1535.82	108835513	D2587P32	193.2	1551.72	108835711
D2587P515	195.15	1536.22	108875329	D2587P315	193.15	1552.12	108875535
D2587P51	195.1	1536.61	108835521	D2587P31	193.1	1552.52	108835729
D2587P505	195.05	1537.00	108875345	D2587P305	193.05	1552.93	108875543
D2587P50	195.0	1537.40	108835539	D2587P30	193.0	1553.33	108835737
D2587P495	194.95	1537.79	108875352	D2587P295	192.95	1553.73	108875550
D2587P49	194.9	1538.19	108835547	D2587P29	192.9	1554.13	108835745
D2587P485	194.85	1538.58	108875360	D2587P285	192.85	1554.54	108875568
D2587P48	194.8	1538.98	108835554	D2587P28	192.8	1554.94	108835752
D2587P475	194.75	1539.37	108875378	D2587P275	192.75	1555.34	108875576
D2587P47	194.7	1539.77	108835562	D2587P27	192.7	1555.75	108835760
D2587P465	194.65	1540.16	108875386	D2587P265	192.65	1556.15	108875584
D2587P46	194.6	1540.56	108835570	D2587P26	192.6	1556.55	108835778
D2587P455	194.55	1540.95	108875394	D2587P255	192.55	1556.96	108875592
D2587P45	194.5	1541.35	108835588	D2587P25	192.5	1557.36	108835786
D2587P445	194.45	1541.75	108875402	D2587P245	192.45	1557.77	108875600
D2587P44	194.4	1542.14	108835596	D2587P24	192.4	1558.17	108835794
D2587P435	194.35	1542.54	108875410	D2587P235	192.35	1558.58	108875618
D2587P43	194.3	1542.94	108835604	D2587P23	192.3	1558.98	108835802
D2587P425	194.25	1543.33	108875428	D2587P225	192.25	1559.39	108875626
D2587P42	194.2	1543.73	108835612	D2587P22	192.2	1559.79	108835810
D2587P415	194.15	1544.13	108875436	D2587P215	192.15	1560.20	108875634

Ordering Information (continued)

Table 7. D2587P 20 mW CW Laser with Locker (C- and L-Band) Ordering Information (continued)

Device Code	ITU-T Frequency (THz)	Center Wavelength (nm)	Comcode	Device Code	ITU-T Frequency (THz)	Center Wavelength (nm)	Comcode
D2587P21	192.1	1560.61	108835828	D2587P900	190.0	1577.86	108836990
D2587P205	192.05	1561.01	108875642	D2587P8995	189.95	1578.27	108876079
D2587P20	192.0	1561.42	108835836	D2587P899	189.9	1578.69	108836982
D2587P195	191.95	1561.83	108875659	D2587P8985	189.85	1579.10	108876061
D2587P19	191.9	1562.23	108835844	D2587P898	189.8	1579.52	108836974
D2587P185	191.85	1562.64	108875667	D2587P8975	189.75	1579.93	108876046
D2587P18	191.8	1563.05	108835851	D2587P897	189.7	1580.35	108836511
D2587P175	191.75	1563.45	108875675	D2587P8965	189.65	1580.77	108876038
D2587P17	191.7	1563.86	108835869	D2587P896	189.6	1581.18	108836503
D2587P9165	191.65	1564.27	109976244	D2587P8955	189.55	1581.60	108876020
D2587P916	191.6	1564.68	108838418	D2587P895	189.5	1582.02	108836495
D2587P9155	191.55	1565.09	108876236	D2587P8945	189.45	1582.44	108876012
D2587P915	191.5	1565.50	108838400	D2587P894	189.4	1582.85	108836487
D2587P9145	191.45	1565.90	108876228	D2587P8935	189.35	1583.27	108876004
D2587P914	191.4	1566.31	108837139	D2587P893	189.3	1583.69	108836479
D2587P9135	191.35	1566.72	108876210	D2587P8925	189.25	1584.11	108875980
D2587P913	191.3	1567.13	108837121	D2587P892	189.2	1584.53	108836461
D2587P9125	191.25	1567.54	108876202	D2587P8915	189.15	1584.95	108875972
D2587P912	191.2	1567.95	108837113	D2587P891	189.1	1585.36	108836453
D2587P9115	191.15	1568.36	108876194	D2587P8905	189.05	1585.78	108875964
D2587P911	191.1	1568.77	108837105	D2587P890	189.0	1586.20	108836446
D2587P9105	191.05	1569.18	108876186	D2587P8895	188.95	1586.62	108875956
D2587P910	191.0	1569.59	108837097	D2587P889	188.9	1587.04	108836438
D2587P9095	190.95	1570.01	108876178	D2587P8885	188.85	1587.46	108875949
D2587P909	190.9	1570.42	108837089	D2587P888	188.8	1587.88	108836420
D2587P9085	190.85	1570.83	108876160	D2587P8875	188.75	1588.30	108875931
D2587P908	190.8	1571.24	108837071	D2587P887	188.7	1588.72	108836412
D2587P9075	190.75	1571.65	108876152	D2587P8865	188.65	1589.15	108875923
D2587P907	190.7	1572.06	108837063	D2587P886	188.6	1589.57	108836404
D2587P9065	190.65	1572.48	108876145	D2587P8855	188.55	1589.99	108875915
D2587P906	190.6	1572.89	108837055	D2587P885	188.5	1590.41	108836396
D2587P9055	190.55	1573.30	108876137	D2587P8845	188.45	1590.83	108875907
D2587P905	190.5	1573.71	108837048	D2587P884	188.4	1591.26	108836388
D2587P9045	190.45	1574.13	108876129	D2587P8835	188.35	1591.68	108875899
D2587P904	190.4	1574.54	108837030	D2587P883	188.3	1592.10	108836370
D2587P9035	190.35	1574.95	108876111	D2587P8825	188.25	1592.52	108875881
D2587P903	190.3	1575.37	108837022	D2587P882	188.2	1592.95	108836362
D2587P9025	190.25	1575.78	108876103	D2587P8815	188.15	1593.37	108875873
D2587P902	190.2	1576.20	108837014	D2587P881	188.1	1593.79	108836354
D2587P9015	190.15	1576.61	108876095	D2587P8805	188.05	1594.22	108875865
D2587P901	190.1	1577.03	108837006	D2587P880	188.0	1594.64	108836347
D2587P9005	190.05	1577.44	108876087	D2587P8795	187.95	1595.06	108875857

Ordering Information (continued)

Table 7. D2587P 20 mW CW Laser with Locker (C- and L-Band) Ordering Information (continued)

Device Code	ITU-T Frequency (THz)	Center Wavelength (nm)	Comcode	Device Code	ITU-T Frequency (THz)	Center Wavelength (nm)	Comcode
D2587P879	187.9	1595.49	108836339	D2587P870	187.0	1603.17	108835950
D2587P8785	187.85	1595.91	108875840	D2587P8695	186.95	1603.60	108875758
D2587P878	187.8	1596.34	108836321	D2587P869	186.9	1604.03	108835943
D2587P8775	187.75	1596.76	108875832	D2587P8685	186.85	1604.46	108875741
D2587P877	187.7	1597.19	108836313	D2587P868	186.8	1604.88	108835935
D2587P8765	187.65	1597.62	108875824	D2587P8675	186.75	1605.31	108875733
D2587P876	187.6	1598.04	108836016	D2587P867	186.7	1605.74	108835927
D2587P8755	187.55	1598.47	108875816	D2587P8665	186.65	1606.17	108875725
D2587P875	187.5	1598.89	108836008	D2587P866	186.6	1606.60	108835919
D2587P8745	187.45	1599.32	108875808	D2587P8655	186.55	1607.04	108875717
D2587P874	187.4	1599.75	108835992	D2587P865	186.5	1607.47	108835901
D2587P8735	187.35	1600.17	108875790	D2587P8645	186.45	1607.90	108875709
D2587P873	187.3	1600.60	108835984	D2587P864	186.4	1608.33	108835893
D2587P8725	187.25	1601.03	108875782	D2587P8635	186.35	1608.76	108875691
D2587P872	187.2	1601.46	108835976	D2587P863	186.3	1609.19	108835885
D2587P8715	187.15	1601.88	108875774	D2587P8625	186.25	1609.62	108875683
D2587P871	187.1	1602.31	108835968	D2587P862	186.2	1610.06	108835877
D2587P8705	187.05	1602.74	108875766				

Ordering Information (continued)

Table 8. D2547P 20 mW CW Laser without Locker (C-Band)

Device Code	ITU-T Frequency (THz)	Center Wavelength (nm)	Comcode	Device Code	ITU-T Frequency (THz)	Center Wavelength (nm)	Comcode
D2547P61	196.1	1528.77	108838301	D2547P38	193.8	1546.92	108838079
D2547P60	196.0	1529.55	108838293	D2547P37	193.7	1547.72	108838061
D2547P59	195.9	1530.33	108838285	D2547P36	193.6	1548.51	108838053
D2547P58	195.8	1531.12	108838277	D2547P35	193.5	1549.32	108838046
D2547P57	195.7	1531.90	108838269	D2547P34	193.4	1550.12	108838038
D2547P56	195.6	1532.68	108838251	D2547P33	193.3	1550.92	108838020
D2547P55	195.5	1533.47	108838244	D2547P32	193.2	1551.72	108838012
D2547P54	195.4	1534.25	108838236	D2547P31	193.1	1552.52	108838004
D2547P53	195.3	1535.04	108838228	D2547P30	193.0	1553.33	108837998
D2547P52	195.2	1535.82	108838210	D2547P29	192.9	1554.13	108837980
D2547P51	195.1	1536.61	108838202	D2547P28	192.8	1554.94	108837972
D2547P50	195.0	1537.40	108838194	D2547P27	192.7	1555.75	108837964
D2547P49	194.9	1538.19	108838186	D2547P26	192.6	1556.55	108837956
D2547P48	194.8	1538.98	108838178	D2547P25	192.5	1557.36	108837949
D2547P47	194.7	1539.77	108838160	D2547P24	192.4	1558.17	108837931
D2547P46	194.6	1540.56	108838152	D2547P23	192.3	1558.98	108837923
D2547P45	194.5	1541.35	108838145	D2547P22	192.2	1559.79	108837915
D2547P44	194.4	1542.14	108838137	D2547P21	192.1	1560.61	108837907
D2547P43	194.3	1542.94	108838129	D2547P20	192.0	1561.42	108837899
D2547P42	194.2	1543.73	108838111	D2547P19	191.9	1562.23	108837881
D2547P41	194.1	1544.53	108838103	D2547P18	191.8	1563.05	108837873
D2547P40	194.0	1545.32	108838095	D2547P17	191.7	1563.86	108837865
D2547P39	193.9	1546.12	108838087				

Ordering Information (continued)

Table 9. D2547P 20 mW CW Laser without Locker (L-Band) Ordering Information

Device Code	ITU Frequency (THz)	Center Wavelength (nm)	Comcode	Device Code	ITU Frequency (THz)	Center Wavelength (nm)	Comcode
D2547P916	191.6	1564.68	108837840	D2547P888	188.8	1587.88	108837568
D2547P915	191.5	1565.50	108837832	D2547P887	188.7	1588.73	108837394
D2547P914	191.4	1566.31	108837824	D2547P886	188.6	1589.57	108837386
D2547P913	191.3	1567.13	108837816	D2547P885	188.5	1590.41	108837378
D2547P912	191.2	1567.95	108837808	D2547P884	188.4	1591.26	108837360
D2547P911	191.1	1568.77	108837790	D2547P883	188.3	1592.10	108837352
D2547P910	191.0	1569.59	108837782	D2547P882	188.2	1592.95	108837345
D2547P909	190.9	1570.42	108837774	D2547P881	188.1	1593.79	108837337
D2547P908	190.8	1571.24	108837766	D2547P880	188.0	1594.64	108837329
D2547P907	190.7	1572.06	108837758	D2547P879	187.9	1595.49	108837311
D2547P906	190.6	1572.89	108837741	D2547P878	187.8	1596.34	108837303
D2547P905	190.5	1573.71	108837733	D2547P877	187.7	1597.19	108837295
D2547P904	190.4	1574.54	108837725	D2547P876	187.6	1598.04	108837287
D2547P903	190.3	1575.37	108837717	D2547P875	187.5	1598.89	108837279
D2547P902	190.2	1576.20	108837709	D2547P874	187.4	1599.75	108837261
D2547P901	190.1	1577.03	108837691	D2547P873	187.3	1600.60	108837253
D2547P900	190.0	1577.86	108837683	D2547P872	187.2	1601.46	108837246
D2547P899	189.9	1578.69	108837675	D2547P871	187.1	1602.31	108837238
D2547P898	189.8	1579.52	108837667	D2547P870	187.0	1603.17	108837220
D2547P897	189.7	1580.35	108837659	D2547P869	186.9	1604.03	108837212
D2547P896	189.6	1581.18	108837642	D2547P868	186.8	1604.88	108837204
D2547P895	189.5	1582.02	108837634	D2547P867	186.7	1605.74	108837196
D2547P894	189.4	1582.85	108837626	D2547P866	186.6	1606.60	108837188
D2547P893	189.3	1583.69	108837618	D2547P865	186.5	1607.47	108837170
D2547P892	189.2	1584.53	108837600	D2547P864	186.4	1608.33	108837162
D2547P891	189.1	1585.36	108837592	D2547P863	186.3	1609.19	108837154
D2547P890	189.0	1586.20	108837584	D2547P862	186.2	1610.06	108837147
D2547P889	188.9	1587.04	108837576				

For additional information, contact your Agere Systems Account Manager or the following:
INTERNET: **http://www.agere.com**
E-MAIL: **docmaster@micro.lucent.com**
N. AMERICA: Agere Systems Inc., 555 Union Boulevard, Room 30L-15P-BA, Allentown, PA 18109-3286
1-800-372-2447, FAX 610-712-4106 (In CANADA: **1-800-553-2448**, FAX 610-712-4106)
ASIA PACIFIC: Agere Systems Singapore Pte. Ltd., 77 Science Park Drive, #03-18 Cintech III, Singapore 118256
Tel. (65) 778 8833, FAX (65) 777 7495
CHINA: Agere Systems (Shanghai) Co., Ltd., 33/F Jin Mao Tower, 88 Century Boulevard Pudong, Shanghai 200121 PRC
Tel. (86) 21 50471212, FAX (86) 21 50472266
JAPAN: Agere Systems Japan Ltd., 7-18, Higashi-Gotanda 2-chome, Shinagawa-ku, Tokyo 141, Japan
Tel. (81) 3 5421 1600, FAX (81) 3 5421 1700
EUROPE: Data Requests: DATALINE: **Tel. (44) 7000 582 368**, FAX (44) 1189 328 148
Technical Inquiries: OPTOELECTRONICS MARKETING: **(44) 1344 865 900** (Ascot UK)

Agere Systems Inc. reserves the right to make changes to the product(s) or information contained herein without notice. No liability is assumed as a result of their use or application. *ST* is a registered trademark of Agere Systems Inc.

Copyright © 2001 Agere Systems Inc.
All Rights Reserved

July 2001
DS00-263OPTO-2 (Replaces DS00-263OPTO-1)

Общество с ограниченной ответственностью «МосЧип» ИНН 7719860671 / КПП 771901001
Адрес: 105318, г.Москва, ул.Щербаковская д.3, офис 1107

Данный компонент на территории Российской Федерации

Вы можете приобрести в компании MosChip.

Для оперативного оформления запроса Вам необходимо перейти по данной ссылке:

http://moschip.ru/get-element

Вы можете разместить у нас заказ для любого Вашего проекта, будь то серийное производство или разработка единичного прибора.

В нашем ассортименте представлены ведущие мировые производители активных и пассивных электронных компонентов.

Нашей специализацией является поставка электронной компонентной базы двойного назначения, продукции таких производителей как XILINX, Intel (ex.ALTERA), Vicor, Microchip, Texas Instruments, Analog Devices, Mini-Circuits, Amphenol, Glenair.

Сотрудничество с глобальными дистрибьюторами электронных компонентов, предоставляет возможность заказывать и получать с международных складов практически любой перечень компонентов в оптимальные для Вас сроки.

На всех этапах разработки и производства наши партнеры могут получить квалифицированную поддержку опытных инженеров.

Система менеджмента качества компании отвечает требованиям в соответствии с ГОСТ Р ИСО 9001, ГОСТ РВ 0015-002 и ЭС РД 009

Офис по работе с юридическими лицами:

105318, г.Москва, ул.Щербаковская д.3, офис 1107, 1118, ДЦ «Щербаковский»

Телефон: +7 495 668-12-70 (многоканальный)

Факс: +7 495 668-12-70 (доб.304)

E-mail: info@moschip.ru

Skype отдела продаж:
moschip.ru
moschip.ru_4
moschip.ru_6
moschip.ru_9