RX24U Group

Renesas MCUs

R01DS0278EJ0100
Rev.1.00
Mar 31, 2017

80-MHz 32-bit RX MCUs, on-chip FPU, 153.6 DMIPS, power supply 5V, 12-bit ADC (equipped with 3-channel synchronous S/H circuits, double data registers, operating amplifiers, comparator) 3 units, Simultaneous sampling up to ADC 5 channels, gain setting reference GND port, CAN, 80-MHz PWM (three-phase complementary output × 2 channels + single-phase complementary output × 4 channels or three-phase complementary × 3 channels + single-phase complementary × 1 channel)

Features

■ 32-bit RXv2 CPU core

- Max. operating frequency: 80 MHz
  Capable of 153.6 DMIPS in operation at 80 MHz
- Enhanced DSP: 32-bit multiply-accumulate and 16-bit multiply-subtract instructions supported
- Built-in FPU: 32-bit single-precision floating point (compliant to IEEE754)
- Divider (fastest instruction execution takes two CPU clock cycles)
- Fast interrupt
- CISC Harvard architecture with 5-stage pipeline
- Variable-length instructions, ultra-compact code
- On-chip debugging circuit
- Memory protection unit (MPU) supported

■ Low power design and architecture

- Operation from a single 2.7-V to 5.5-V supply
- Three low power consumption modes

■ On-chip code flash memory

- 512-/384-/256-Kbyte capacities
- On-board or off-board user programming
- For instructions and operands

■ On-chip data flash memory

- 8-Kbyte (Number of erase/write cycles: 1,000,000 (typ))
- BGO (Back Ground Operation)

■ On-chip SRAM, no wait states

- 32 Kbytes of SRAM

■ Data transfer functions

- DTC: Four transfer modes

■ Reset and supply management

- Seven types of reset, including the power-on reset (POR)
- Low voltage detection (LVD) with voltage settings

■ Clock functions

- Main clock oscillator frequency: 1 to 20 MHz
- External clock input frequency: Up to 20 MHz
- PLL circuit input: 4 MHz to 12.5 MHz
- On-chip low-speed oscillators, on-chip high-speed oscillators, dedicated on-chip oscillator for the IWDT
- Clock frequency accuracy measurement circuit (CAC)

■ Independent watchdog timer

- 15-kHz on-chip oscillator produces a dedicated clock signal to drive IWDT operation.

■ Useful functions for IEC60730 compliance

- Self-diagnostic and disconnection-detection assistance functions for the A/D converter, clock frequency accuracy measurement circuit, independent watchdog timer, RAM test assistance functions using the DOC, etc.

■ MPC

- Multiple locations are selectable for I/O pins of peripheral functions

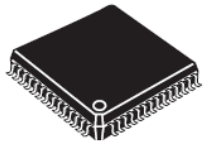

PLQP0144KA-B 20 × 20 mm, 0.5 mm pitch
PLQP0100KB-B 14 × 14 mm, 0.5 mm pitch

■ Up to 9 communications channels

- CAN (compliant with ISO11898-1), incorporating 16 message boxes (1 channel)
- SCI with many useful functions (6 channels)
  Asynchronous mode, clock synchronous mode, smart card interface mode, simplified SPI, simplified I^{2}C, and extended serial mode.
- I^{2}C bus interface: Transfer at up to 400 kbps, capable of SMBus operation (1 channel)
- RSPI capable of high speed connection Transfer at up to 20 Mbps (1 channel)

■ Up to 25 extended-function timers (Up to three-phase complementary PWM 3-channel simultaneous output)

- 16-bit MTU3: 80 MHz operation, input capture, output compare, three-phase complementary PWM × 2 channels output, CPU-efficient complementary PWM, phase counting mode (nine channels)
- 16-bit GPT: 80 MHz operation, input capture, output compare, PWM wave-form single-phase complementary × 4 channels output or three-phase complementary × 1 channel + single-phase complementary × 1 channel output, comparator interlocking operation (Count operation, PWM negate control) (4 channels)
- 8-bit TMRs (8 channels)
- 16-bit compare-match timers (4 channels)

■ 12-bit A/D converter: 22 channels in 3 units

- Incorporating sample-and-hold circuit 12 bits × 3 units (unit 0: 5 channels, unit 1: 5 channels, unit 2: 12 channels)
- Sampling time can be set for each channel
- Group scan priority control mode (3 levels)
- Self-diagnostic function and analog input disconnection detection assistance function (compliant to IEC60730)
- Input signal amplitude by the programmable gain amplifier (4 channels)
- Gain setting reference GND port: 2 ports
- ADC: 3-channel simultaneous sample-and-hold circuit (3 shunt method), double data register (1 shunt method), amplifiers (4 channels), comparator (4 channels)

■ 8-bit D/A converter: 2 channels

- This can be used as reference voltage for a comparator

■ Register write protection function can protect values in important registers against overwriting.

■ Up to 111 pins for general I/O ports

- 5-V tolerant, open drain, input pull-up, switching of driving capacity

■ Operating temperature range

- –40 to +85°C

■ Applications

- General industrial and consumer equipment

1. Overview

1.1 Outline of Specifications

Table 1.1 lists the specifications, and Table 1.2 gives a comparison of the functions of the products in different packages.

Table 1.1 is for products with the greatest number of functions, so the number of peripheral modules and channels will differ in accordance with the package type. For details, see Table 1.2, Comparison of Functions for Different Packages.

Table 1.1 Outline of Specifications (1/4)

Classification	Module/Function	Description
CPU	CPU	• Maximum operating frequency: 80 MHz • 32-bit RX CPU (RX v2) • Minimum instruction execution time: One instruction per clock cycle • Address space: 4-Gbyte linear • Register set General purpose: Sixteen 32-bit registers Control: Ten 32-bit registers Accumulator: Two 72-bit registers • Basic instructions: 75 Variable-length instruction format • Floating-point instructions: 11 • DSP instructions: 23 • Addressing modes: 11 • Data arrangement Instructions: Little endian Data: Selectable as little endian or big endian • On-chip 32-bit multiplier: 32-bit × 32-bit → 64-bit • On-chip divider: 32-bit ÷ 32-bit → 32-bit • Barrel shifter: 32 bits • ROM cache 2 Kbytes (disabled by default)
	FPU	• Single precision (32-bit) floating point • Data types and floating-point exceptions in conformance with the IEEE754 standard
Memory	ROM	• Capacity: 256 K/384 K/512 Kbytes • Up to 32 MHz, no-wait memory access 32 to 80 MHz: wait states • Off-board programming • Programming/erasing method: Serial programming (asynchronous serial communication), self-programming
	RAM	• Capacity: 32 Kbytes • 80 MHz, no-wait memory access
	E2 DataFlash	• Capacity: 8 Kbytes • Number of erase/write cycles: 1,000,000 (typ)
MCU operating mode		Single-chip mode
Clock	Clock generation circuit	• Main clock oscillator, low- and high-speed on-chip oscillators, PLL frequency synthesizer, and IWDT-dedicated on-chip oscillator • Independent settings for the system clock (ICLK), peripheral module clock (PCLK), and FlashIF clock (FCLK) The CPU and system sections such as other bus masters run in synchronization with the system clock (ICLK): 80 MHz (at max.) The MTU3, GPT, and SCI11 modules run in synchronization with the PCLKA: 80 MHz (at max.) The peripheral modules other than MTU3, GPT, and SCI11 run in synchronization with the PCLKB: 40 MHz (at max.) ADCLK operated in S12AD runs in synchronization with the PCLKD: 40 MHz (at max.) The flash memory peripheral circuit runs in synchronization with the FCLK: 32 MHz (at max.)
Resets		RES# pin reset, power-on reset, voltage monitoring reset, independent watchdog timer reset, and software reset
Voltage detection	Voltage detection circuit (LVDAb)	• When the voltage on VCC falls below the voltage detection level, an internal reset or internal interrupt is generated. Voltage detection circuit 0 is capable of selecting the detection voltage from 3 levels Voltage detection circuit 1 is capable of selecting the detection voltage from 9 levels Voltage detection circuit 2 is capable of selecting the detection voltage from 4 levels
Low power consumption	Low power consumption functions	• Module stop function • Three low power consumption modes Sleep mode, deep sleep mode, and software standby mode
	Function for lower operating power consumption	• Operating power control modes High-speed operating mode and middle-speed operating mode

Table 1.1 Outline of Specifications (2/4)

Classification	Module/Function	Description
Interrupt	Interrupt controller (ICUb)	• Interrupt vectors: 175 • External interrupts: 9 (NMI, IRQ0 to IRQ7 pins) • Non-maskable interrupts: 5 (NMI pin, oscillation stop detection interrupt, voltage monitoring 1 interrupt, voltage monitoring 2 interrupt, and IWDT interrupt) • 16 levels specifiable for the order of priority
DMA	Data transfer controller (DTCa)	• Transfer modes: Normal transfer, repeat transfer, and block transfer • Activation sources: Interrupts • Chain transfer function
I/O ports	General I/O ports	144-/100-pin • I/O: 110/79 • Input: 1/1 • Pull-up resistors: 110/79 • Open-drain outputs: 90/61 • 5-V tolerance: 2/2
Multi-function pin controller (MPC)		Capable of selecting the input/output function from multiple pins
Timers	Multi-function timer pulse unit 3 (MTU3d)	• 9 units (16 bits × 9 channels) • Provides up to 28 pulse-input/output lines and three pulse-input lines • Select from among fourteen counter-input clock signals for each channel (PCLK/1, PCLK/2, PCLK/4, PCLK/8, PCLK/16, PCLK/32, PCLK/64, PCLK/256, PCLK/1024, MTCLKA, MTCLKB, MTCLKC, MTCLKD, MTIOC1A) other than channel 1/3/4/6/7, for which only eleven signals are available, channel 2 for 12, channel 5 for 10 • 43 general registers including 28 output compare/input capture registers • Counter clear operation (with compare match- or input capture-sourced simultaneous counter clear capability) • Simultaneous writing to multiple timer counters (TCNT) • Simultaneous register input/output by synchronous counter operation • Buffer operation • Cascaded operation • 45 interrupt sources • Automatic transfer of register data • Pulse output modes: Toggle/PWM/complementary PWM/reset-synchronized PWM • Complementary PWM output mode 3-phase non-overlapping waveform output for inverter control Automatic dead time setting Adjustable PWM duty cycle: from 0 to 100% A/D conversion request delaying function Interrupt at crest/trough can be skipped Double buffer function • Reset-synchronized PWM mode Outputs three phases each for positive and negative PWM waveforms in user-specified duty cycle • Phase counting modes: 16-bit mode (channel 1 and 2)/32-bit mode (channel 1 and 2) • Dead time compensation counter function • A/D converter start trigger can be generated • A/D converter start triggers can be skipped • Signals from the input capture and external counter clock pins are input via a digital filter
	Port output enable 3 (POE3A)	• High impedance control of the MTU3/GPT waveform output pins and switching them to operate as general I/O ports • Startup by input from signal sources on 6 pins (POE0#, POE4#, POE8#, POE10#, POE11#, and POE12#) • Startup by detection of short-circuited outputs (detection of simultaneous PMW output at the active level) • Startup on detection of oscillation stopping or by a comparator, or under software control • Control of the addition of pins for output control is programmable

Table 1.1 Outline of Specifications (3/4)

Classification	Module/Function	Description
Timers	General PWM timer (GPTB)	• 16 bits × 4 channels • Two channels can be cascaded and used as a 32-bit timer • Counting up or down (saw waves), or counting up and down (triangle waves) is selectable for each counter. • A count clock is selectable from 13 types (PCLK/1, PCLK/2, PCLK/4, PCLK/8, PCLK/16,PCLK/32, PCLK/64, PCLK/256, PCLK/1024, GTECLKA, GTECLKB, GTECLKC, and GTECLKD) for each channel. • Two I/O pins per channel • Two output compare/input capture registers per channel • For the two output compare/input capture registers of each channel, 4 registers are provided as buffer registers and are capable of operating as comparison registers when buffering is not in use. • In output compare operation, buffer switching can be at crests or troughs, enabling the generation of laterally asymmetric PWM waveforms. • Registers for setting up frame cycles in each channel (with capability for generating interrupts at overflow or underflow) • Synchronous operation of the several counters • Modes of synchronous operation (synchronized or displaced by a desired time to obtain relative phase shifts) • Generation of dead times in PWM operation • Through combination of three counters, generation of three-phased PWM waveforms incorporating dead times • Starting, clearing, and stopping counters in response to external or internal triggers • Internal trigger sources: output of the comparator detection, MTU3 count start, software, compare match • Noise filter function for signals on the Input capture, external trigger pins, and the external count clock pins • A/D converter start triggers can be generated
	Compare match timer (CMT)	• (16 bits × 2 channels) × 2 units • Select from among four clock signals (PCLK/8, PCLK/32, PCLK/128, PCLK/512)
	Independent watchdog timer (IWDTa)	• 14 bits × 1 channel • Count clock: Dedicated low-speed on-chip oscillator for the IWDT-dedicated on-chip oscillator Frequency divided by 1, 16, 32, 64, 128, or 256
	8-bit timer (TMR)	• (8 bits × 2 channels) × 4 units • Seven internal clocks (PCLK/1, PCLK/2, PCLK/8, PCLK/32, PCLK/64, PCLK/1024, and PCLK/8192) and an external clock can be selected • Pulse output and PWM output with any duty cycle are available • Two channels can be cascaded and used as a 16-bit timer • Generates A/D conversion start trigger • Generates baud rate clock for the SCI5 and SCI6
Communication functions	Serial communications interfaces (SCIg)	• 6 channels (channel 1, 5, 6, 8, 9 and 11: SCIg) • SCIg Serial communications: asynchronous, clock synchronous, and smart-card interface On-chip baud rate generator allows selection of the desired bit rate Selection of LSB-first or MSB first transfer Average transfer rate clocks for SCI5 and SCI6 can be input from TMR timers Simple I^2C Simple SPI Multi-processor function Detection of the start bit: Level or edge is selectable. 9-bit transfer mode Bit rate modulation
	I^2C bus interface (RIICa)	• 1 channel • Communications formats: I^2C bus format/SMBus format • Master mode or slave mode selectable • Supports fast mode
	CAN module (RSCAN)	• Single channel • ISO11898-1 specifications compliant (standard and extended frames) • 16 message boxes
	Serial peripheral interface (RSPIb)	• 1 channel • Transfer facility Using the MOSI (master out, slave in), MISO (master in, slave out), SSL (slave select), and RSPCK (RSPI clock) signals enables serial transfer through SPI operation (four lines) or clock-synchronous operation (three lines) • Capable of handling serial transfer as a master or slave • Data formats Choice of LSB-first or MSB-first transfer The number of bits in each transfer can be changed to 8 to 16, 20, 24, or 32 bits. 128-bit buffers for transmission and reception Up to four frames can be transmitted or received in a single transfer operation (with each frame having up to 32 bits) • Double buffers for both transmission and reception

Table 1.1 Outline of Specifications (4/4)

Classification	Module/Function	Description
12-bit A/D converter (S12ADF)		• 12 bits (5 channels × 2 units/12 channels × 1 unit) • 12-bit resolution • Minimum conversion time: 1.0 μs per channel when the ADCLK is operating at 40 MHz • Operating modes Scan mode (single scan mode, continuous scan mode, and 3 group scan mode) Group A priority control (only for 3 group scan mode) • Sampling variable Sampling time can be set up for each channel • Self-diagnostic function • Double trigger mode (A/D conversion data duplicated) • Assist on analog input disconnection detection • A/D conversion start conditions A software trigger, a trigger from a timer (MTU3, GPT, TMR), or an external trigger signal • Sample-and-hold function Sample-and-hold circuit included (3 channels for unit 1) • Amplification of input signals by a programmable gain amplifier (1 channel for unit 0, 3 channels for unit 1) Amplification rate: 2.0 times, 2.5 times, 3.077 times, 3.636 times, 4.0 times, 4.444 times, 5.0 times, 6.667 times, 8.0 times, 10.0 times, 13.333 times (total of 11 steps)
Comparator C (CMPC)		• 4 channels • Function to compare the reference voltage and the analog input voltage • Reference voltage: DA0 or DA1 output is selectable • Analog input voltage is selectable from 4 inputs
8-bit D/A converter (DAa)		• 2 channels • 8-bit resolution • Output voltage: 0 V to AVCC2
Safety	Memory protection unit (MPU)	• Protection area: Eight areas (max.) can be specified in the range from 0000 0000h to FFFF FFFFh. • Minimum protection unit: 16 bytes • Reading from, writing to, and enabling the execution access can be specified for each area. • An address exception occurs when the detected access is not in the permitted area.
	Register write protection function	• Protects important registers from being overwritten for in case a program runs out of control.
	CRC calculator (CRC)	• CRC code generation for arbitrary amounts of data in 8-bit units • Select any of three generating polynomials: $X^8 + X^2 + X + 1$, $X^{16} + X^{15} + X^2 + 1$, or $X^{16} + X^{12} + X^5 + 1$ • Generation of CRC codes for use with LSB-first or MSB-first communications is selectable.
	Main clock oscillation stop function	• Main clock oscillation stop detection: Available
	Clock frequency accuracy measurement circuit (CAC)	• Monitors the clock output from the main clock oscillator, high-speed on-chip oscillator, low-speed on-chip oscillator, the PLL frequency synthesizer, IWDT-dedicated on-chip oscillator, and PCLKB.
	Data operation circuit (DOC)	The function to compare, add, or subtract 16-bit data
Power supply voltages/Operating frequencies		VCC = 2.7 to 5.5 V: 80 MHz
Packages		144-pin LFQFP 0.5 mm pitch 100-pin LFQFP 0.5 mm pitch
On-chip debugging system		E1 emulator (FINE interface)

Table 1.2 Comparison of Functions for Different Packages

Module/Functions		RX24U Group	
		144 Pins	**100 Pins**
Memory	ROM	512 Kbytes	
	RAM	32 Kbytes	
	E2 Data Flash	8 Kbytes	
Interrupts	External interrupts	NMI, IRQ0 to IRQ7	
DTC	Data transfer controller (DTCa)	Available	
Timers	Multi-function timer pulse unit 3 (MTU3d)	9 channels	
	General PWM timer (GPTB)	4 channels	
	Port output enable 3 (POE3A)	POE0#, POE4#, POE8#, POE10#, POE11#, POE12#	
	8-bit timer (TMR)	2 channels × 4 units	
	Compare match timer (CMT)	2 channels × 2 units	
	Independent watchdog timer (IWDTa)	Available	
Communication functions	Serial communications interfaces (SCIg) [including simple I^{2}C and simple SPI]	6 channels (SCI1, 5, 6, 8, 9, 11)	4 channels (SCI1, 5, 6, 11)
	I^{2}C bus interface (RIICa)	1 channel	
	Serial peripheral interface (RSPIb)	1 channel	
	CAN module (RSCAN)	1 channel	
12-bit A/D converter (including high-precision channels) (S12ADF)		5 channels × 2 units, 12 channels × 1 unit (4 channels × 2 units, 12 channels × 1 unit)	5 channels × 2 units, 10 channels × 1 unit (4 channels × 2 units, 10 channels × 1 unit)
	3 channels simultaneous sampling function	3 channels/unit 1	
	Programmable gain amplifier	1 channel/unit 0, 3 channels/unit 1	
Comparator C (CMPC)		4 channels	
D/A converter (DAa)		2 channels	
CRC calculator (CRC)		Available	
Packages		144-pin LFQFP	100-pin LFQFP

1.2 List of Products

Table 1.3 is a list of products, and Figure 1.1 shows how to read the product part no., memory capacity, and package type.

Table 1.3 List of Products

Group	Part No.	Part No. (for Orders)	Package	ROM Capacity	RAM Capacity	E2 DataFlash	Operating Frequency (max.)	Operating Temperature
RX24U	R5F524UEADFB	R5F524UEADFB#30	PLQP0144KA-B	512 Kbytes	32 Kbytes	8 Kbytes	80 MHz	–40 to + 85°C
	R5F524UEADFP	R5F524UEADFP#30	PLQP0100KB-B					
	R5F524UCADFB	R5F524UCADFB#30	PLQP0144KA-B	384 Kbytes				
	R5F524UCADFP	R5F524UCADFP#30	PLQP0100KB-B					
	R5F524UBADFB	R5F524UBADFB#30	PLQP0144KA-B	256 Kbytes				
	R5F524UBADFP	R5F524UBADFP#30	PLQP0100KB-B					

Note: The part numbers for orders above are used for products in mass production or under development when this manual is issued. Refer to the Renesas Electronics Corporation website for the latest part numbers.

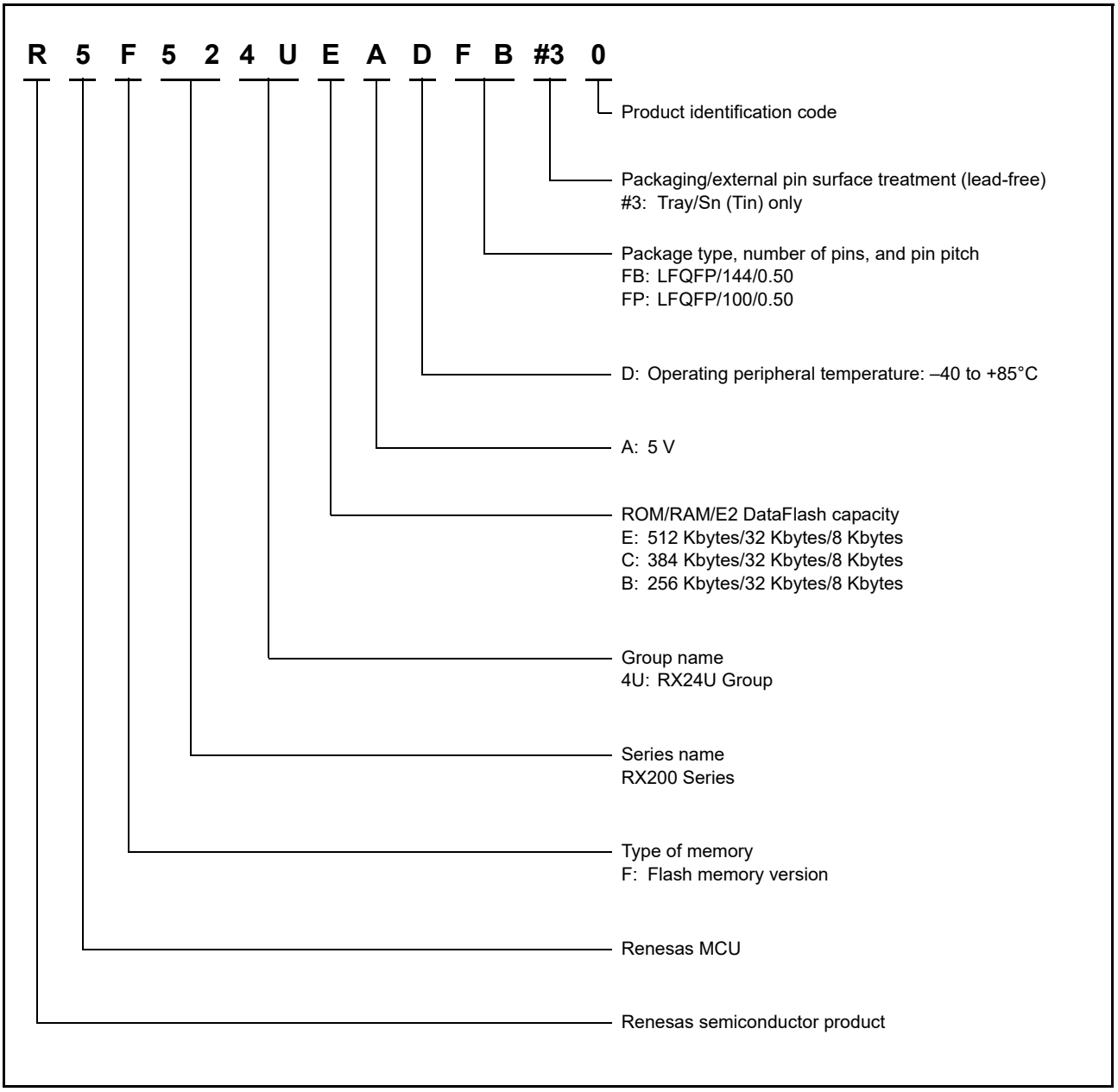

Figure 1.1 How to Read the Product Part Number

1.3 Block Diagram

Figure 1.2 shows a block diagram.

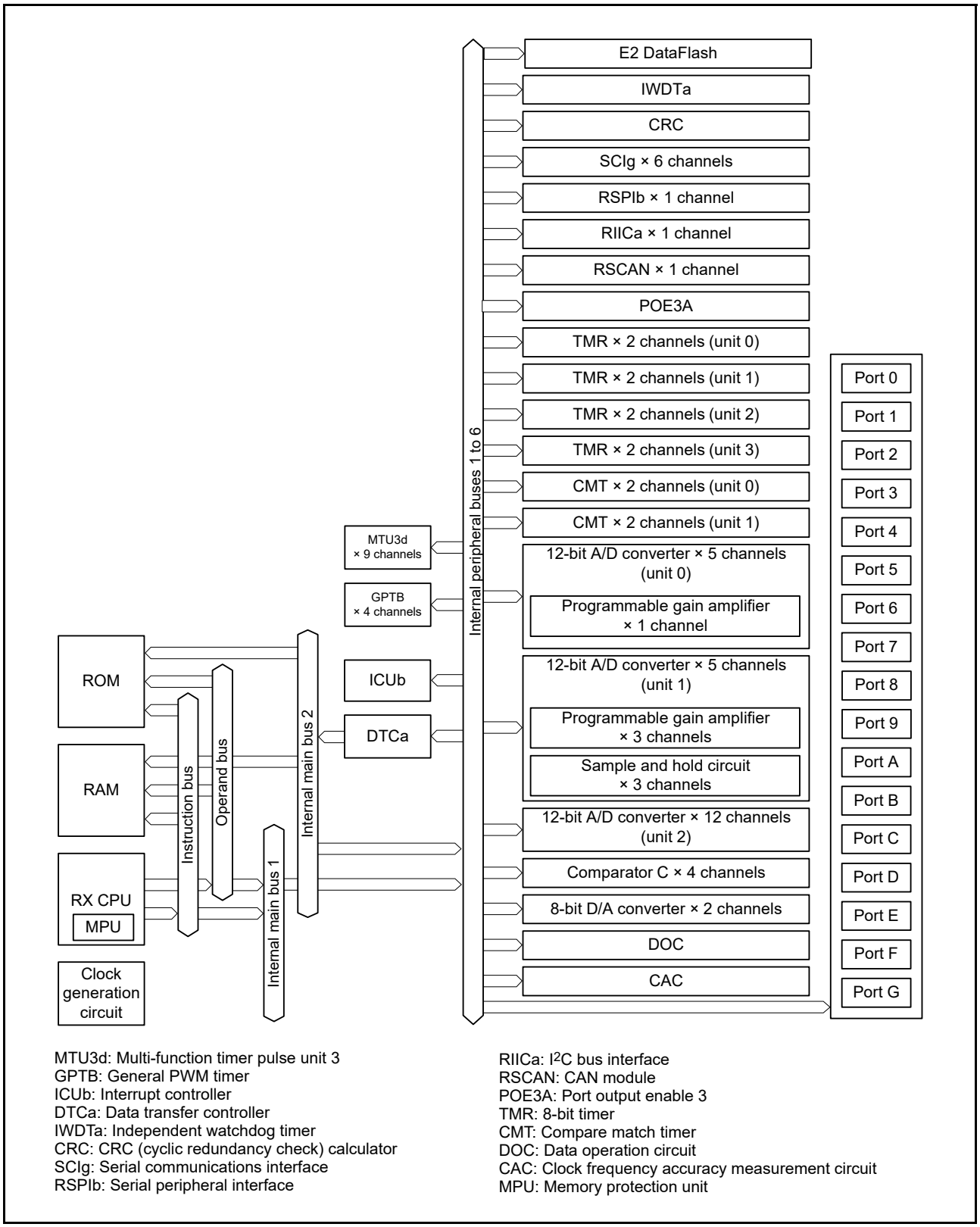

Figure 1.2 Block Diagram

1.4 Pin Functions

Table 1.4 lists the pin functions.

Table 1.4 Pin Functions (1/4)

Classifications	Pin Name	I/O	Description
Power supply	VCC	—	Power supply pin. Connect it to the system power supply.
	VCL	—	Connect this pin to the VSS pin via the 4.7 μF smoothing capacitor used to stabilize the internal power supply. Place the capacitor close to the pin.
	VSS	—	Ground pin. Connect it to the system power supply (0 V).
Clock	XTAL	Output	Pins for connecting a crystal. An external clock can be input through the EXTAL pin.
	EXTAL	Input	
Operating mode control	MD	Input	Pin for setting the operating mode. The signal levels on this pin must not be changed during operation.
System control	RES#	Input	Reset pin. This MCU enters the reset state when this signal goes low.
CAC	CACREF	Input	Input pin for the clock frequency accuracy measurement circuit.
On-chip emulator	FINED	I/O	FINE interface pin.
Interrupts	NMI	Input	Non-maskable interrupt request pin.
	IRQ0 to IRQ7	Input	Interrupt request pins.
Multi-function timer pulse unit 3 (MTU3d)	MTIOC0A, MTIOC0B, MTIOC0C, MTIOC0D	I/O	The TGRA0 to TGRD0 input capture input/output compare output/PWM output pins.
	MTIOC0A#, MTIOC0B#, MTIOC0C#, MTIOC0D#	I/O	The TGRA0 to TGRD0 input capture inverted input/output compare inverted output/PWM inverted output pins.
	MTIOC1A, MTIOC1B	I/O	The TGRA1 and TGRB1 input capture input/output compare output/PWM output pins.
	MTIOC1A#, MTIOC1B#	I/O	The TGRA1 and TGRB1 input capture inverted input/output compare inverted output/PWM inverted output pins.
	MTIOC2A, MTIOC2B	I/O	The TGRA2 and TGRB2 input capture input/output compare output/PWM output pins.
	MTIOC2A#, MTIOC2B#	I/O	The TGRA2 and TGRB2 input capture inverted input/output compare inverted output/PWM inverted output pins.
	MTIOC3A, MTIOC3B, MTIOC3C, MTIOC3D	I/O	The TGRA3 to TGRD3 input capture input/output compare output/PWM output pins.
	MTIOC3A#, MTIOC3B#, MTIOC3C#, MTIOC3D#	I/O	The TGRA3 to TGRD3 input capture inverted input/output compare inverted output/PWM inverted output pins.
	MTIOC4A, MTIOC4B, MTIOC4C, MTIOC4D	I/O	The TGRA4 to TGRD4 input capture input/output compare output/PWM output pins.
	MTIOC4A#, MTIOC4B#, MTIOC4C#, MTIOC4D#	I/O	The TGRA4 to TGRD4 input capture inverted input/output compare inverted output/PWM inverted output pins.
	MTIC5U, MTIC5V, MTIC5W	Input	The TGRU5, TGRV5, and TGRW5 input capture input/external pulse input pins.
	MTIC5U#, MTIC5V#, MTIC5W#	Input	The TGRU5, TGRV5, and TGRW5 input capture inverted input/external pulse inverted input pins.
	MTIOC6A, MTIOC6B, MTIOC6C, MTIOC6D	I/O	The TGRA6 to TGRD6 input capture input/output compare output/PWM output pins.
	MTIOC6A#, MTIOC6B#, MTIOC6C#, MTIOC6D#	I/O	The TGRA6 to TGRD6 input capture inverted input/output compare inverted output/PWM inverted output pins.
	MTIOC7A, MTIOC7B, MTIOC7C, MTIOC7D	I/O	The TGRA7 to TGRD7 input capture input/output compare output/PWM output pins.
	MTIOC7A#, MTIOC7B#, MTIOC7C#, MTIOC7D#	I/O	The TGRA7 to TGRD7 input capture inverted input/output compare inverted output/PWM inverted output pins.
	MTIOC9A, MTIOC9B, MTIOC9C, MTIOC9D	I/O	The TGRA9 to TGRD9 input capture input/output compare output/PWM output pins.

Table 1.4 Pin Functions (2/4)

Classifications	Pin Name	I/O	Description
Multi-function timer pulse unit 3 (MTU3d)	MTIOC9A#, MTIOC9B#, MTIOC9C#, MTIOC9D#	I/O	The TGRA9 to TGRD9 input capture inverted input/output compare inverted output/PWM inverted output pins.
	MTCLKA, MTCLKB, MTCLKC, MTCLKD	Input	Input pins for the external clock.
	MTCLKA#, MTCLKB#, MTCLKC#, MTCLKD#	Input	Inverted input pins for the external clock.
	ADSM0, ADSM1	Output	A/D trigger output pins.
General PWM timer (GPTB)	GTIOC0A, GTIOC0B	I/O	The GPT0.GTGRA and GPT0.GTGRB input capture input/output compare output/PWM output pins
	GTIOC0A#, GTIOC0B#	I/O	The GPT0.GTGRA and GPT0.GTGRB input capture inverted input/output compare inverted output/PWM inverted output pins
	GTIOC1A, GTIOC1B	I/O	The GPT1.GTGRA and GPT1.GTGRB input capture input/output compare output/PWM output pins
	GTIOC1A#, GTIOC1B#	I/O	The GPT1.GTGRA and GPT1.GTGRB input capture inverted input/output compare inverted output/PWM inverted output pins
	GTIOC2A, GTIOC2B	I/O	The GPT2.GTGRA and GPT2.GTGRB input capture input/output compare output/PWM output pins
	GTIOC2A#, GTIOC2B#	I/O	The GPT2.GTGRA and GPT2.GTGRB input capture inverted input/output compare inverted output/PWM inverted output pins
	GTIOC3A, GTIOC3B	I/O	The GPT3.GTGRA and GPT3.GTGRB input capture input/output compare output/PWM output pins
	GTIOC3A#, GTIOC3B#	I/O	The GPT3.GTGRA and GPT3.GTGRB input capture inverted input/output compare inverted output/PWM inverted output pins
	GTETRG	Input	External trigger input pin for GPT0 to GPT3
	GTECLKA, GTECLKB, GTECLKC, GTECLKD	Input	Input pins A to D for the external clock
	GTADSM0, GTADSM1	Output	A/D conversion start request monitoring output pins
8-bit timer (TMR)	TMO0 to TMO7	Output	Compare match output pins.
	TMCI0 to TMCI7	Input	Input pins for the external clock to be input to the counter.
	TMRI0 to TMRI7	Input	Counter reset input pins.
Port output enable 3 (POE3A)	POE0#, POE4#, POE8#, POE10#, POE11#, POE12#	Input	Input pins for request signals to switch the MTU and GPT pins between the high impedance state or operation as general I/O port pins
Serial communications interface (SCIg)	• Asynchronous mode/clock synchronous mode		
	SCK1, SCK5, SCK6, SCK8, SCK9, SCK11	I/O	Input/output pins for the clock.
	RXD1, RXD5, RXD6, RXD8, RXD9, RXD11	Input	Input pins for received data.
	TXD1, TXD5, TXD6, TXD8, TXD9, TXD11	Output	Output pins for transmitted data.
	CTS1#, CTS5#, CTS6#, CTS8#, CTS9#, CTS11#	Input	Input pins for controlling the start of transmission and reception.
	RTS1#, RTS5#, RTS6#, RTS8#, RTS9#, RTS11#	Output	Output pins for controlling the start of transmission and reception.
	• Simple I^2C mode		
	SSCL1, SSCL5, SSCL6, SSCL8, SSCL9, SSCL11	I/O	Input/output pins for the I^2C clock.
	SSDA1, SSDA5, SSDA6, SSDA8, SSDA9, SSDA11	I/O	Input/output pins for the I^2C data.
	• Simple SPI mode		
	SCK1, SCK5, SCK6, SCK8, SCK9, SCK11	I/O	Input/output pins for the clock.

Table 1.4 Pin Functions (3/4)

Classifications	Pin Name	I/O	Description
Serial communications interface (SCIg)	SMISO1, SMISO5, SMISO6, SMISO8, SMISO9, SMISO11	I/O	Input/output pins for slave transmit data.
	SMOSI1, SMOSI5, SMOSI6, SMOSI8, SMOSI9, SMOSI11	I/O	Input/output pins for master transmit data.
	SS1#, SS5#, SS6#, SS8#, SS9#, SS11#	Input	Chip-select input pins.
I^2C bus interface (RIICa)	SCL0	I/O	Input/output pin for I^2C bus interface clocks. Bus can be directly driven by the N-channel open drain output.
	SDA0	I/O	Input/output pin for I^2C bus interface data. Bus can be directly driven by the N-channel open drain output.
Serial peripheral interface (RSPIb)	RSPCKA	I/O	Input/output pin for the RSPI clock.
	MOSIA	I/O	Input/output pin for transmitting data from the RSPI master.
	MISOA	I/O	Input/output pin for transmitting data from the RSPI slave.
	SSLA0	I/O	Input/output pin to select the slave for the RSPI.
	SSLA1 to SSLA3	Output	Output pins to select the slave for the RSPI.
CAN module (RSCAN)	CRXD0	Input	Input pin
	CTXD0	Output	Output pin
12-bit A/D converter (S12ADF)	AN000 to AN003, AN016, AN100 to AN103, AN116, AN200 to AN211	Input	Input pins for the analog signals to be processed by the A/D converter.
	ADST0, ADST1, ADST2	Output	Output pins for A/D conversion status.
	ADTRG0#, ADTRG1#, ADTRG2#	Input	Input pins for the external trigger signals that start the A/D conversion.
	PGAVSS0	Input	AN000 PGA gain setting resistor reference ground pin: Connect to AVSS0 when the PGA is not used.
	PGAVSS1	Input	AN100 to 102 PGA gain setting resistor reference ground pin: Connect to AVSS1 when the PGA is not used.
8-bit D/A converter (DAa)	DA0, DA1	Output	Output pins for the analog signals to be processed by the D/A converter
Comparator C (CMPC)	COMP0 to COMP3	Output	Comparator detection result output pins.
	CMPC00 to CMPC03	Input	Analog input pins for CMPC0
	CMPC10 to CMPC13	Input	Analog input pins for CMPC1
	CMPC20 to CMPC23	Input	Analog input pins for CMPC2
	CMPC30 to CMPC33	Input	Analog input pins for CMPC3
Analog power supply	AVCC0	—	Analog power supply and reference power supply pin for 12-bit A/D converter unit 0. Connect the AVCC0 pin to AVCC1, or AVCC2 when 12-bit A/D converter unit 0 is not used.
	AVSS0	—	Analog ground and reference ground pin for 12-bit A/D converter unit 0. Connect the AVSS0 pin to AVSS1 or AVSS2 when 12-bit A/D converter unit 0 is not used.
	AVCC1	—	Analog power supply and reference power supply pin for 12-bit A/D converter unit 1. Connect the AVCC1 pin to AVCC0, or AVCC2 when 12-bit A/D converter unit 1 is not used.
	AVSS1	—	Analog ground and reference ground pin for 12-bit A/D converter unit 1. Connect the AVSS1 pin to AVSS0 or AVSS2 when 12-bit A/D converter unit 1 is not used.

Table 1.4 Pin Functions (4/4)

Classifications	Pin Name	I/O	Description
Analog power supply	AVCC2	—	Analog power supply and reference power supply pin for 12-bit A/D converter unit 2. Analog power supply pin for D/A converter. Analog power supply pin for comparator C. Connect the AVCC2 pin to AVCC0, or AVCC1 when these modules are not used.
	AVSS2	—	Analog ground and reference ground pin for 12-bit A/D converter unit 2. Analog ground pin for D/A converter. Analog ground pin for comparator C. Connect the AVSS2 pin to AVSS0 or AVSS1 when these modules are not used.
	VREFH0	—	Reference voltage supply pin for the 12-bit A/D converter unit 0.: Connect to AVCC0.
	VREFL0	—	Reference ground pin for the 12-bit A/D converter unit 0.: Connect to AVSS0.
	VREFH1	—	Reference voltage supply pin for the 12-bit A/D converter unit 1. Connect to AVCC1.
	VREFL1	—	Reference ground pin for the 12-bit A/D converter unit 1. Connect to AVSS1.
	VREFH2	—	Reference voltage supply pin for the 12-bit A/D converter unit 2.: Connect to AVCC2.
	VREFL2	—	Reference ground pin for the 12-bit A/D converter unit 2.: Connect to AVSS2.
I/O ports	P00 to P02	I/O	3-bit input/output pins.
	P10 to P17	I/O	8-bit input/output pins.
	P20 to P27	I/O	8-bit input/output pins.
	P30 to P37	I/O	8-bit input/output pins.
	P40 to P47	I/O	8-bit input/output pins.
	P50 to P55	I/O	6-bit input/output pins.
	P60 to P65	I/O	6-bit input/output pins.
	P70 to P76	I/O	7-bit input/output pins.
	P80 to P84	I/O	5-bit input/output pins.
	P90 to P96	I/O	7-bit input/output pins.
	PA0 to PA7	I/O	8-bit input/output pins.
	PB0 to PB7	I/O	8-bit input/output pins.
	PC0 to PC6	I/O	7-bit input/output pins.
	PD0 to PD7	I/O	8-bit input/output pins.
	PE0 to PE6	I/O	7-bit input/output pins (PE2: input).
	PF0 to PF3	I/O	4-bit input/output pins.
	PG0 to PG2	I/O	3-bit input/output pins.

Note: When the A/D converter, D/A converter, and comparator C are not used, connect the AVCC0, AVCC1, AVCC2, VREFH0, VREFH1 and VREFH2 pins to VCC, and connect the AVSS0, AVSS1, AVSS2, VREFL0, VREFL1 and VREFL2 pins to VSS, respectively.

1.5 Pin Assignments

Figure 1.3 and Figure 1.4 show the pin assignments. Table 1.5 and Table 1.6 show the lists of pins and pin functions.

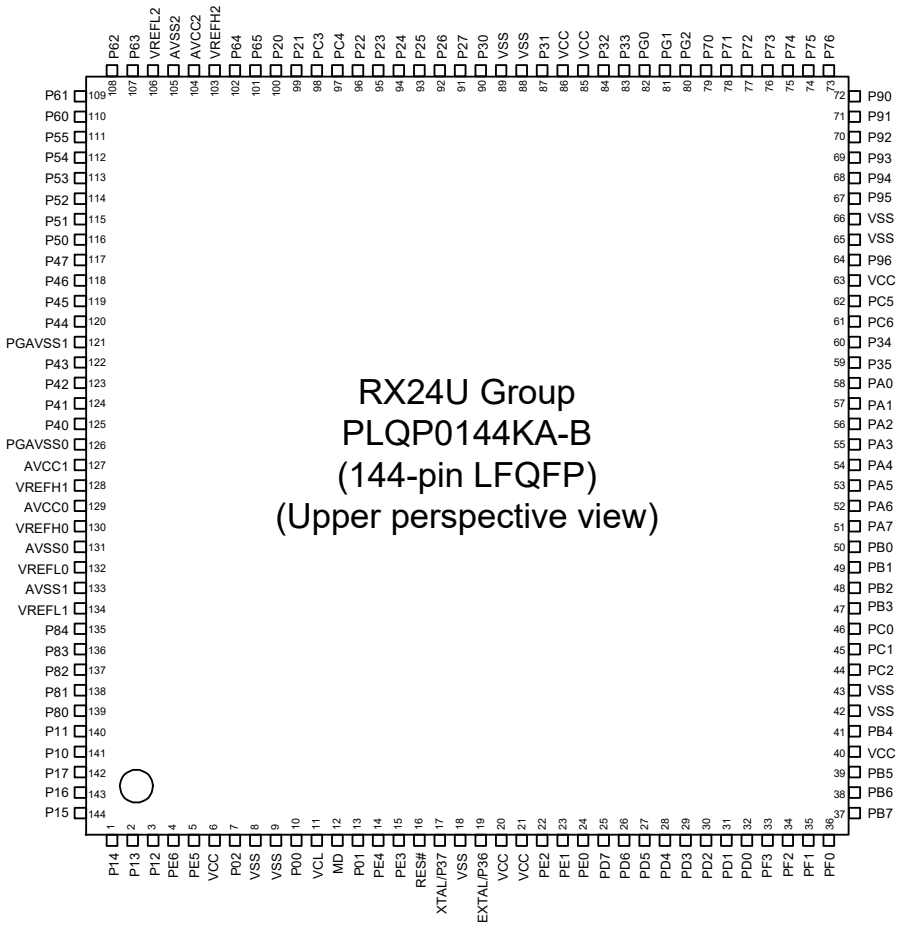

Note: This figure indicates the power supply pins and I/O port pins.
For the pin configuration, see the table “List of Pins and Pin Functions (144-Pin LFQFP)”.

Figure 1.3 Pin Assignments of the 144-Pin LFQFP

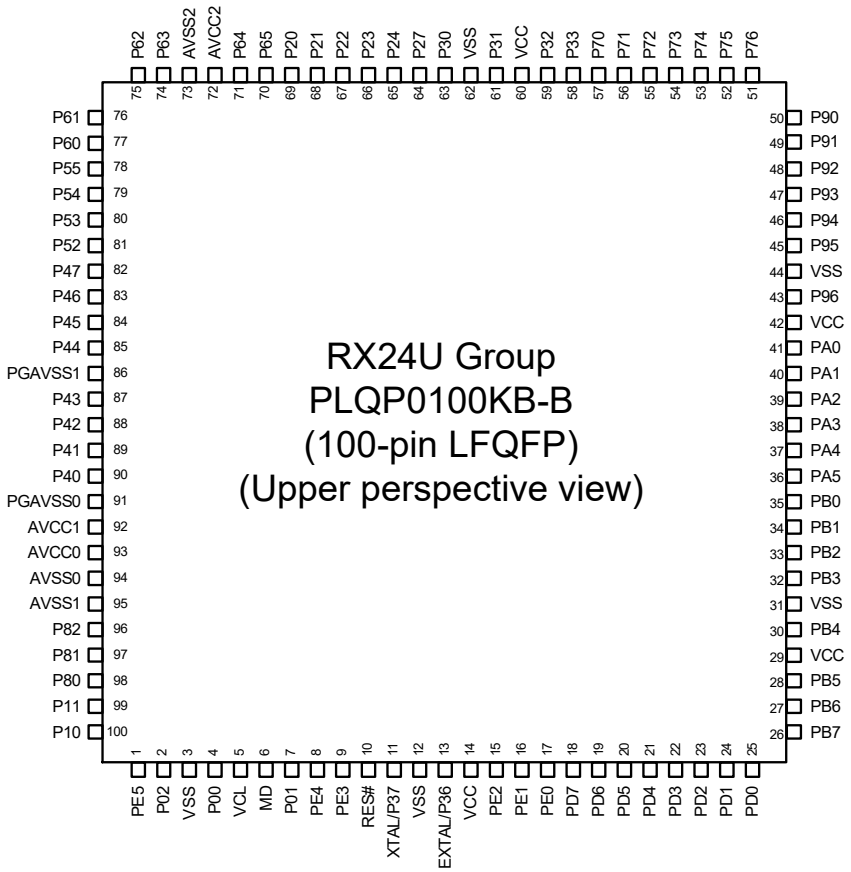

Note: This figure indicates the power supply pins and I/O port pins.
For the pin configuration, see the table “List of Pins and Pin Functions (100-Pin LFQFP)”.

Figure 1.4 Pin Assignments of the 100-Pin LFQFP

Table 1.5 List of Pins and Pin Functions (144-Pin LFQFP) (1/4)

Pin No.	Power Supply, Clock, System Control	I/O Port	Timers (TMR, MTU3, POE, CAC, GPT)	Communications (SCI, RSPI, RIIC, RSCAN)	Others
1		P14	MTIOC4B, MTIOC4B#, GTIOC2A, GTIOC2A#		
2		P13	MTIOC4A, MTIOC4A#, GTIOC1A, GTIOC1A#		
3		P12	MTIOC3B, MTIOC3B#, GTIOC0A, GTIOC0A#		
4		PE6	POE10#		IRQ3
5		PE5			IRQ0
6	VCC				
7		P02	MTIOC9D, MTIOC9D#	CTS1#, RTS1#, SS1#	IRQ5, ADST0
8	VSS				
9	VSS				
10		P00			IRQ2, ADST1
11	VCL				
12	MD				FINED
13		P01	POE12#		IRQ4, ADST2
14		PE4	MTCLKC, MTCLKC#, POE10#		IRQ1
15		PE3	MTCLKD, MTCLKD#, POE11#		IRQ2
16	RES#				
17	XTAL	P37			
18	VSS				
19	EXTAL	P36			
20	VCC				
21	VCC				
22		PE2	POE10#		NMI
23		PE1	MTIOC9D, MTIOC9D#, TMO5	CTS5#, RTS5#, SS5#, SSLA3	
24		PE0	MTIOC9B, MTIOC9B#, TMCI1, TMCI5	RXD5, SMISO5, SSCL5, SSLA2	
25		PD7	MTIOC9A, MTIOC9A#, TMRI1, TMRI5, GTIOC3A, GTIOC3A#	TXD5, SMOSI5, SSDA5, SSLA1	
26		PD6	MTIOC9C, MTIOC9C#, TMO1, GTIOC3B, GTIOC3B#	CTS1#, RTS1#, SS1#, CTS11#, RTS11#, SS11#, SSLA0	IRQ5, ADST0
27		PD5	TMRI0, TMRI6, GTECLKA	RXD1, SMISO1, SSCL1, RXD11, SMISO11, SSCL11	IRQ3
28		PD4	TMCI0, TMCI6, GTECLKB	SCK1, SCK11	IRQ2
29		PD3	TMO0, GTECLKC	TXD1, SMOSI1, SSDA1, TXD11, SMOSI11, SSDA11	
30		PD2	TMCI1, TMO4, GTIOC0A, GTIOC0A#	SCK5, MOSIA	
31		PD1	TMO2, GTIOC0B, GTIOC0B#	MISOA	
32		PD0	TMO6, GTIOC1A, GTIOC1A#	RSPCKA	
33		PF3	TMO7	CTS11#, RTS11#, SS11#, CRXD0	COMP0
34		PF2	TMO3	SCK11, CTXD0	COMP1
35		PF1	TMO5	RXD11, SMISO11, SSCL11	COMP2
36		PF0	TMO1	TXD11, SMOSI11, SSDA11	COMP3
37		PB7	GTIOC1B, GTIOC1B#	SCK5	
38		PB6	GTIOC2A, GTIOC2A#	RXD5, SMISO5, SSCL5	IRQ5
39		PB5	GTIOC2B, GTIOC2B#	TXD5, SMOSI5, SSDA5	
40	VCC				
41		PB4	POE8#, GTETRG, GTECLKD	CTS5#, RTS5#, SS5#	IRQ3
42	VSS				
43	VSS				
44		PC2	ADSM0, GTADSM0	SCK8	
45		PC1	ADSM1, GTADSM1	TXD8, SMOSI8, SSDA8	
46		PC0		RXD8, SMISO8, SSCL8	COMP3
47		PB3	MTIOC0A, MTIOC0A#, CACREF	SCK6, RSPCKA	
48		PB2	MTIOC0B, MTIOC0B#, TMRI0, ADSM0	TXD6, SMOSI6, SSDA6, SDA0	
49		PB1	MTIOC0C, MTIOC0C#, TMCI0, ADSM1	RXD6, SMISO6, SSCL6, SCL0	

Table 1.5 List of Pins and Pin Functions (144-Pin LFQFP) (2/4)

Pin No.	Power Supply, Clock, System Control	I/O Port	Timers (TMR, MTU3, POE, CAC, GPT)	Communications (SCI, RSPI, RIIC, RSCAN)	Others
50		PB0	MTIOC0D, MTIOC0D#, TMO0	TXD6, SMOSI6, SSDA6, MOSIA	ADTRG2#
51		PA7	TMO2, ADSM0		
52		PA6	TMO6, ADSM1		
53		PA5	MTIOC1A, MTIOC1A#, TMCI3	RXD6, SMISO6, SSCL6, MISOA	IRQ1, ADTRG1#
54		PA4	MTIOC1B, MTIOC1B#, TMCI7	SCK6, RSPCKA	ADTRG0#
55		PA3	MTIOC2A, MTIOC2A#, TMRI7, GTADSM0	SSLA0	
56		PA2	MTIOC2B, MTIOC2B#, TMO7, GTADSM1	CTS6#, RTS6#, SS6#, SSLA1	
57		PA1	MTIOC6A, MTIOC6A#, TMO4	SSLA2, CRXD0	ADTRG0#
58		PA0	MTIOC6C, MTIOC6C#, TMO2	SSLA3, CTXD0	
59		P35	TMO0, GTADSM0	CTS8#, RTS8#, SS8#	
60		P34	TMO4, GTADSM1	CTS9#, RTS9#, SS9#	
61		PC6	MTIOC1A, MTIOC1A#	RXD11, SMISO11, SSCL11	
62		PC5	MTIOC1B, MTIOC1B#	TXD11, SMOSI11, SSDA11	
63	VCC				
64		P96	POE4#	CTS8#, RTS8#, SS8#	IRQ4
65	VSS				
66	VSS				
67		P95	MTIOC6B, MTIOC6B#		
68		P94	MTIOC7A, MTIOC7A#		
69		P93	MTIOC7B, MTIOC7B#		
70		P92	MTIOC6D, MTIOC6D#		
71		P91	MTIOC7C, MTIOC7C#		
72		P90	MTIOC7D, MTIOC7D#		
73		P76	MTIOC4D, MTIOC4D#, GTIOC2B, GTIOC2B#		
74		P75	MTIOC4C, MTIOC4C#, GTIOC1B, GTIOC1B#		
75		P74	MTIOC3D, MTIOC3D#, GTIOC0B, GTIOC0B#		
76		P73	MTIOC4B, MTIOC4B#, GTIOC2A, GTIOC2A#		
77		P72	MTIOC4A, MTIOC4A#, GTIOC1A, GTIOC1A#		
78		P71	MTIOC3B, MTIOC3B#, GTIOC0A, GTIOC0A#		
79		P70	POE0#	CTS9#, RTS9#, SS9#	IRQ5
80		PG2	GTETRG	SCK9	COMP0
81		PG1		TXD9, SMOSI9, SSDA9	COMP1
82		PG0		RXD9, SMISO9, SSCL9	COMP2
83		P33	MTIOC3A, MTIOC3A#, MTCLKA, MTCLKA#, TMO0	SSLA3	
84		P32	MTIOC3C, MTIOC3C#, MTCLKB, MTCLKB#, TMO6	SSLA2	
85	VCC				
86	VCC				
87		P31	MTIOC0A, MTIOC0A#, MTCLKC, MTCLKC#, TMRI6	SSLA1	IRQ6
88	VSS				
89	VSS				
90		P30	MTIOC0B, MTIOC0B#, MTCLKD, MTCLKD#, TMCI6	SSLA0	IRQ7, COMP3
91		P27	MTIOC1A, MTIOC1A#		
92		P26	MTIOC9A, MTIOC9A#	CTS1#, RTS1#, SS1#	ADST0
93		P25	MTIOC9C, MTIOC9C#	SCK1	ADST1
94		P24	MTIC5U, MTIC5U#, TMCI2, TMO6	RSPCKA	COMP0, DA0
95		P23	MTIC5V, MTIC5V#, TMO2, CACREF	MOSIA	COMP1, DA1

Table 1.5 List of Pins and Pin Functions (144-Pin LFQFP) (3/4)

Pin No.	Power Supply, Clock, System Control	I/O Port	Timers (TMR, MTU3, POE, CAC, GPT)	Communications (SCI, RSPI, RIIC, RSCAN)	Others
96		P22	MTIC5W, MTIC5W#, TMRI2, TMO4	MISOA	ADTRG2#, COMP2
97		PC4		TXD1, SMOSI1, SSDA1	ADST2
98		PC3		RXD1, SMISO1, SSCL1	
99		P21	MTCLKA, MTCLKA#, MTIOC9A, MTIOC9A#, TMCI4		IRQ6, ADTRG1#, AN116
100		P20	MTCLKB, MTCLKB#, MTIOC9C, MTIOC9C#, TMRI4		IRQ7, ADTRG0#, AN016
101		P65			AN205
102		P64			AN204
103	VREFH2				
104	AVCC2				
105	AVSS2				
106	VREFL2				
107		P63			AN203, IRQ7
108		P62			AN202, IRQ6
109		P61			AN201, IRQ5
110		P60			AN200, IRQ4
111		P55			AN211, IRQ3
112		P54			AN210, IRQ2
113		P53			AN209, IRQ1
114		P52			AN208, IRQ0
115		P51			AN207
116		P50			AN206
117		P47			AN103
118		P46			AN102, CMPC12, CMPC13, CMPC30, CMPC31
119		P45			AN101, CMPC02, CMPC03, CMPC20, CMPC21
120		P44			AN100, CMPC10, CMPC11, CMPC32, CMPC33
121	PGAVSS1				
122		P43			AN003
123		P42			AN002
124		P41			AN001
125		P40			AN000, CMPC00, CMPC01, CMPC22, CMPC23
126	PGAVSS0				
127	AVCC1				
128	VREFH1				
129	AVCC0				
130	VREFH0				
131	AVSS0				
132	VREFL0				
133	AVSS1				
134	VREFL1				
135		P84		TXD8, SMOSI8, SSDA8	
136		P83		RXD8, SMISO8, SSCL8	
137		P82	MTIC5U, MTIC5U#, TMO4	SCK6	
138		P81	MTIC5V, MTIC5V#, TMCI4	TXD6, SMOSI6, SSDA6	
139		P80	MTIC5W, MTIC5W#, TMRI4	RXD6, SMISO6, SSCL6	
140		P11	MTIOC3A, MTIOC3A#, MTCLKC, MTCLKC#, TMO3		IRQ1
141		P10	MTIOC9B, MTIOC9B#, MTCLKD, MTCLKD#, TMRI3, POE12#	CTS6#, RTS6#, SS6#	IRQ0
142		P17	MTIOC4D, MTIOC4D#, GTIOC2B, GTIOC2B#		

Table 1.5 List of Pins and Pin Functions (144-Pin LFQFP) (4/4)

Pin No.	Power Supply, Clock, System Control	I/O Port	Timers (TMR, MTU3, POE, CAC, GPT)	Communications (SCI, RSPI, RIIC, RSCAN)	Others
143		P16	MTIOC4C, MTIOC4C#, GTIOC1B, GTIOC1B#		
144		P15	MTIOC3D, MTIOC3D#, GTIOC0B, GTIOC0B#		

Table 1.6 List of Pins and Pin Functions (100-Pin LFQFP) (1/3)

Pin No.	Power Supply, Clock, System Control	I/O Port	Timers (TMR, MTU3, POE, CAC, GPT)	Communications (SCI, RSPI, RIIC, RSCAN)	Others
1		PE5			IRQ0
2		P02	MTIOC9D, MTIOC9D#	CTS1#, RTS1#, SS1#	IRQ5, ADST0
3	VSS				
4		P00			IRQ2, ADST1
5	VCL				
6	MD				FINED
7		P01	POE12#		IRQ4, ADST2
8		PE4	MTCLKC, MTCLKC#, POE10#		IRQ1
9		PE3	MTCLKD, MTCLKD#, POE11#		IRQ2
10	RES#				
11	XTAL	P37			
12	VSS				
13	EXTAL	P36			
14	VCC				
15		PE2	POE10#		NMI
16		PE1	MTIOC9D, MTIOC9D#, TMO5	CTS5#, RTS5#, SS5#, SSLA3	
17		PE0	MTIOC9B, MTIOC9B#, TMCI1, TMCI5	RXD5, SMISO5, SSCL5, SSLA2	
18		PD7	MTIOC9A, MTIOC9A#, TMRI1, TMRI5, GTIOC3A, GTIOC3A#	TXD5, SMOSI5, SSDA5, SSLA1	
19		PD6	MTIOC9C, MTIOC9C#, TMO1, GTIOC3B, GTIOC3B#	CTS1#, RTS1#, SS1#, CTS11#, RTS11#, SS11#, SSLA0	IRQ5, ADST0
20		PD5	TMRI0, TMRI6, GTECLKA	RXD1, SMISO1, SSCL1, RXD11, SMISO11, SSCL11	IRQ3
21		PD4	TMCI0, TMCI6, GTECLKB	SCK1, SCK11	IRQ2
22		PD3	TMO0, GTECLKC	TXD1, SMOSI1, SSDA1, TXD11, SMOSI11, SSDA11	
23		PD2	TMCI1, TMO4, GTIOC0A, GTIOC0A#	SCK5, MOSIA	
24		PD1	TMO2, GTIOC0B, GTIOC0B#	MISOA	
25		PD0	TMO6, GTIOC1A, GTIOC1A#	RSPCKA	
26		PB7	GTIOC1B, GTIOC1B#	SCK5	
27		PB6	GTIOC2A, GTIOC2A#	RXD5, SMISO5, SSCL5	IRQ5
28		PB5	GTIOC2B, GTIOC2B#	TXD5, SMOSI5, SSDA5	
29	VCC				
30		PB4	POE8#, GTETRG, GTECLKD	CTS5#, RTS5#, SS5#	IRQ3
31	VSS				
32		PB3	MTIOC0A, MTIOC0A#, CACREF	SCK6, RSPCKA	
33		PB2	MTIOC0B, MTIOC0B#, TMRI0, ADSM0	TXD6, SMOSI6, SSDA6, SDA0	
34		PB1	MTIOC0C, MTIOC0C#, TMCI0, ADSM1	RXD6, SMISO6, SSCL6, SCL0	
35		PB0	MTIOC0D, MTIOC0D#, TMO0	TXD6, SMOSI6, SSDA6, MOSIA	ADTRG2#
36		PA5	MTIOC1A, MTIOC1A#, TMCI3	RXD6, SMISO6, SSCL6, MISOA	IRQ1, ADTRG1#
37		PA4	MTIOC1B, MTIOC1B#, TMCI7	SCK6, RSPCKA	ADTRG0#
38		PA3	MTIOC2A, MTIOC2A#, TMRI7, GTADSM0	SSLA0	
39		PA2	MTIOC2B, MTIOC2B#, TMO7, GTADSM1	CTS6#, RTS6#, SS6#, SSLA1	
40		PA1	MTIOC6A, MTIOC6A#, TMO4	SSLA2, CRXD0	ADTRG0#
41		PA0	MTIOC6C, MTIOC6C#, TMO2	SSLA3, CTXD0	
42	VCC				
43		P96	POE4#		IRQ4
44	VSS				
45		P95	MTIOC6B, MTIOC6B#		
46		P94	MTIOC7A, MTIOC7A#		
47		P93	MTIOC7B, MTIOC7B#		
48		P92	MTIOC6D, MTIOC6D#		
49		P91	MTIOC7C, MTIOC7C#		
50		P90	MTIOC7D, MTIOC7D#		

Table 1.6 List of Pins and Pin Functions (100-Pin LFQFP) (2/3)

Pin No.	Power Supply, Clock, System Control	I/O Port	Timers (TMR, MTU3, POE, CAC, GPT)	Communications (SCI, RSPI, RIIC, RSCAN)	Others
51		P76	MTIOC4D, MTIOC4D#, GTIOC2B, GTIOC2B#		
52		P75	MTIOC4C, MTIOC4C#, GTIOC1B, GTIOC1B#		
53		P74	MTIOC3D, MTIOC3D#, GTIOC0B, GTIOC0B#		
54		P73	MTIOC4B, MTIOC4B#, GTIOC2A, GTIOC2A#		
55		P72	MTIOC4A, MTIOC4A#, GTIOC1A, GTIOC1A#		
56		P71	MTIOC3B, MTIOC3B#, GTIOC0A, GTIOC0A#		
57		P70	POE0#		IRQ5
58		P33	MTIOC3A, MTIOC3A#, MTCLKA, MTCLKA#, TMO0	SSLA3	
59		P32	MTIOC3C, MTIOC3C#, MTCLKB, MTCLKB#, TMO6	SSLA2	
60	VCC				
61		P31	MTIOC0A, MTIOC0A#, MTCLKC, MTCLKC#, TMRI6	SSLA1	IRQ6
62	VSS				
63		P30	MTIOC0B, MTIOC0B#, MTCLKD, MTCLKD#, TMCI6	SSLA0	IRQ7, COMP3
64		P27	MTIOC1A, MTIOC1A#		
65		P24	MTIC5U, MTIC5U#, TMCI2, TMO6	RSPCKA	COMP0, DA0
66		P23	MTIC5V, MTIC5V#, TMO2, CACREF	MOSIA	COMP1, DA1
67		P22	MTIC5W, MTIC5W#, TMRI2, TMO4	MISOA	ADTRG2#, COMP2
68		P21	MTCLKA, MTCLKA#, MTIOC9A, MTIOC9A#, TMCI4		IRQ6, ADTRG1#, AN116
69		P20	MTCLKB, MTCLKB#, MTIOC9C, MTIOC9C#, TMRI4		IRQ7, ADTRG0#, AN016
70		P65			AN205
71		P64			AN204
72	AVCC2				
73	AVSS2				
74		P63			AN203, IRQ7
75		P62			AN202, IRQ6
76		P61			AN201, IRQ5
77		P60			AN200, IRQ4
78		P55			AN211, IRQ3
79		P54			AN210, IRQ2
80		P53			AN209, IRQ1
81		P52			AN208, IRQ0
82		P47			AN103
83		P46			AN102, CMPC12, CMPC13, CMPC30, CMPC31
84		P45			AN101, CMPC02, CMPC03, CMPC20, CMPC21
85		P44			AN100, CMPC10, CMPC11, CMPC32, CMPC33
86	PGAVSS1				
87		P43			AN003
88		P42			AN002
89		P41			AN001
90		P40			AN000, CMPC00, CMPC01, CMPC22, CMPC23
91	PGAVSS0				

Table 1.6 List of Pins and Pin Functions (100-Pin LFQFP) (3/3)

Pin No.	Power Supply, Clock, System Control	I/O Port	Timers (TMR, MTU3, POE, CAC, GPT)	Communications (SCI, RSPI, RIIC, RSCAN)	Others
92	AVCC1				
93	AVCC0				
94	AVSS0				
95	AVSS1				
96		P82	MTIC5U, MTIC5U#, TMO4	SCK6	
97		P81	MTIC5V, MTIC5V#, TMCI4	TXD6, SMOSI6, SSDA6	
98		P80	MTIC5W, MTIC5W#, TMRI4	RXD6, SMISO6, SSCL6	
99		P11	MTIOC3A, MTIOC3A#, MTCLKC, MTCLKC#, TMO3		IRQ1
100		P10	MTIOC9B, MTIOC9B#, MTCLKD, MTCLKD#, TMRI3, POE12#	CTS6#, RTS6#, SS6#	IRQ0

2. CPU

Figure 2.1 shows register set of the CPU.

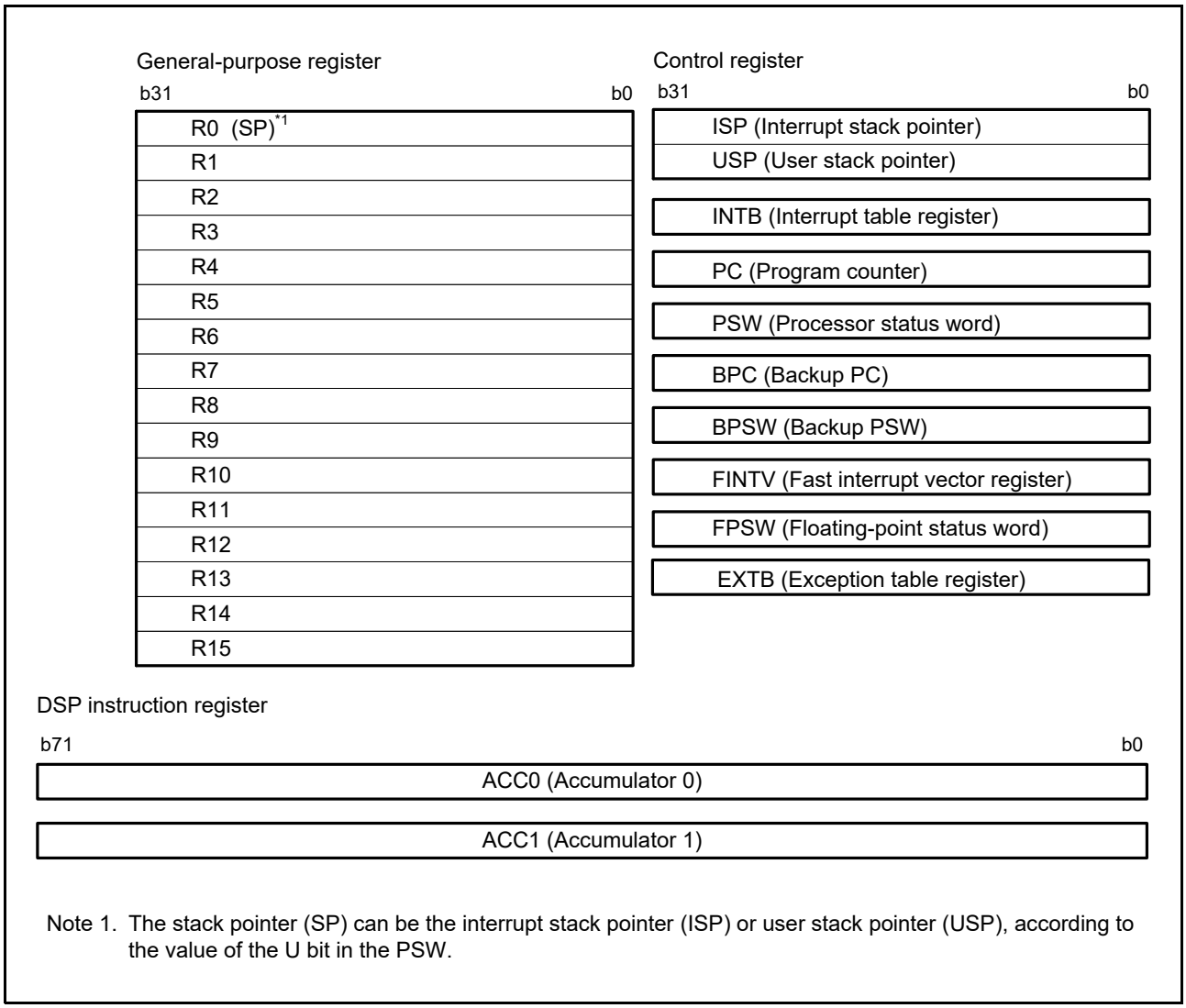

Note 1. The stack pointer (SP) can be the interrupt stack pointer (ISP) or user stack pointer (USP), according to the value of the U bit in the PSW.

Figure 2.1 Register Set of the CPU

2.1 General-Purpose Registers (R0 to R15)

This CPU has sixteen 32-bit general-purpose registers (R0 to R15). R0 to R15 can be used as data registers or address registers.
R0, a general-purpose register, also functions as the stack pointer (SP).
The stack pointer is switched to operate as the interrupt stack pointer (ISP) or user stack pointer (USP) by the value of the stack pointer select bit (U) in the processor status word (PSW).

2.2 Control Registers

(1) Interrupt stack pointer (ISP) and user stack pointer (USP)

The stack pointer (SP) can be either of two types, the interrupt stack pointer (ISP) or the user stack pointer (USP). Whether the stack pointer operates as the ISP or USP depends on the value of the stack pointer select bit (U) in the processor status word (PSW).
Set the ISP or USP to a multiple of 4 to reduce the number of cycles required to execute interrupt sequences and instructions entailing stack manipulation.

(2) Exception table register (EXTB)

The exception table register (EXTB) specifies the address where the exception vector table starts.
Set the EXTB to a multiple of 4 to reduce the number of cycles required to execute interrupt sequences and instructions entailing stack manipulation.

(3) Interrupt table register (INTB)

The interrupt table register (INTB) specifies the address where the interrupt vector table starts.
Set the INTB to a multiple of 4 to reduce the number of cycles required to execute interrupt sequences and instructions entailing stack manipulation.

(4) Program counter (PC)

The program counter (PC) indicates the address of the instruction being executed.

(5) Processor status word (PSW)

The processor status word (PSW) indicates the results of instruction execution or the state of the CPU.

(6) Backup PC (BPC)

The backup PC (BPC) is provided to speed up response to interrupts.
After a fast interrupt has been generated, the contents of the program counter (PC) are saved in the BPC register.

(7) Backup PSW (BPSW)

The backup PSW (BPSW) is provided to speed up response to interrupts.
After a fast interrupt has been generated, the contents of the processor status word (PSW) are saved in the BPSW. The allocation of bits in the BPSW corresponds to that in the PSW.

(8) Fast interrupt vector register (FINTV)

The fast interrupt vector register (FINTV) is provided to speed up response to interrupts.
The FINTV register specifies a branch destination address when a fast interrupt has been generated.

(9) Floating-point status word (FPSW)

The floating-point status word (FPSW) indicates the results of floating-point operations.
When an exception handling enable bit (Ej) enables the exception handling (Ej = 1), the exception cause can be identified by checking the corresponding Cj flag in the exception handling routine. If the exception handling is masked (Ej = 0), the occurrence of exception can be checked by reading the Fj flag at the end of a series of processing. Once the Fj flag has been set to 1, this value is retained until it is cleared to 0 by software (j = X, U, Z, O, or V).

2.3 Accumulator

The accumulator (ACC0 or ACC1) is a 72-bit register used for DSP instructions. The accumulator is handled as a 96-bit register for reading and writing. At this time, when bits 95 to 72 of the accumulator are read, the value where the value of bit 71 is sign extended is read. Writing to bits 95 to 72 of the accumulator is ignored. ACC0 is also used for the multiply and multiply-and-accumulate instructions; EMUL, EMULU, FMUL, MUL, and RMPA, in which case the prior value in ACC0 is modified by execution of the instruction.
Use the MVTACGU, MVTACHI, and MVTACLO instructions for writing to the accumulator. The MVTACGU, MVTACHI, and MVTACLO instructions write data to bits 95 to 64, the higher-order 32 bits (bits 63 to 32), and the lower-order 32 bits (bits 31 to 0), respectively.
Use the MVFACGU, MVFACHI, MVFACMI, and MVFACLO instructions for reading data from the accumulator. The MVFACGU, MVFACHI, MVFACMI, and MVFACLO instructions read data from the guard bits (bits 95 to 64), higher-order 32 bits (bits 63 to 32), the middle 32 bits (bits 47 to 16), and the lower-order 32 bits (bits 31 to 0), respectively.

3. Address Space

3.1 Address Space

This MCU has a 4-Gbyte address space, consisting of the range of addresses from 0000 0000h to FFFF FFFFh. That is, linear access to an address space of up to 4 Gbytes is possible, and this contains both program and data areas.
Figure 3.1 shows the memory maps.

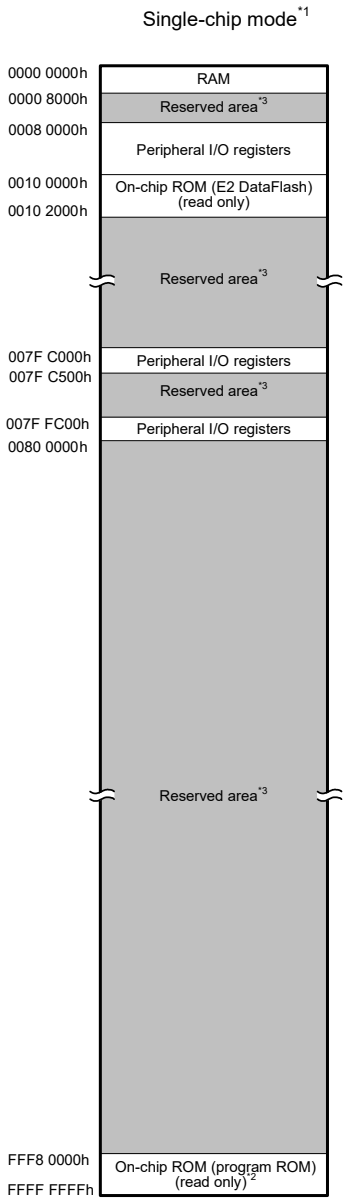

Note 1. The address space in boot mode is the same as the address space in single-chip mode.
Note 2. The capacity of ROM differs depending on the products.

ROM (bytes)		RAM (bytes)		E2 DataFlash (bytes)	
Capacity	**Address**	**Capacity**	**Address**	**Capacity**	**Address**
512 K	FFF8 0000h to FFFF FFFFh	32 K	0000 0000h to 0000 7FFFh	8 K	0010 0000h to 0010 1FFFh
384 K	FFFA 0000h to FFFF FFFFh				
256 K	FFFC 0000h to FFFF FFFFh				

Note: See Table 1.3 List of Products, for the product type name.

Note 3. Reserved areas should not be accessed.

Figure 3.1 Memory Map in Each Operating Mode

4. I/O Registers

This section provides information on the on-chip I/O register addresses and bit configuration. The information is given as shown below. Notes on writing to registers are also given below.

(1) I/O register addresses (address order)

- Registers are listed from the lower allocation addresses.
- Registers are classified according to module symbols.
- Numbers of cycles for access indicate numbers of cycles of the given base clock.
- Among the internal I/O register area, addresses not listed in the list of registers are reserved. Reserved addresses must not be accessed. Do not access these addresses; otherwise, the operation when accessing these bits and subsequent operations cannot be guaranteed.

(2) Notes on writing to I/O registers

When writing to an I/O register, the CPU starts executing the subsequent instruction before completing I/O register write. This may cause the subsequent instruction to be executed before the post-update I/O register value is reflected on the operation.
As described in the following examples, special care is required for the cases in which the subsequent instruction must be executed after the post-update I/O register value is actually reflected.

[Examples of cases requiring special care]

- The subsequent instruction must be executed while an interrupt request is disabled with the IENj bit in IERn of the ICU (interrupt request enable bit) cleared to 0.
- A WAIT instruction is executed immediately after the preprocessing for causing a transition to the low power consumption state.

In the above cases, after writing to an I/O register, wait until the write operation is completed using the following procedure and then execute the subsequent instruction.

(a) Write to an I/O register.
(b) Read the value from the I/O register to a general register.
(c) Execute the operation using the value read.
(d) Execute the subsequent instruction.

[Instruction examples]

- Byte-size I/O registers

```
MOV.L  #SFR_ADDR, R1
MOV.B  #SFR_DATA, [R1]
CMP    [R1].UB, R1
;; Next process
```

- Word-size I/O registers

```
MOV.L  #SFR_ADDR, R1
MOV.W  #SFR_DATA, [R1]
CMP    [R1].W, R1
;; Next process
```

- Longword-size I/O registers

```
MOV.L  #SFR_ADDR, R1
MOV.L  #SFR_DATA, [R1]
CMP    [R1].L, R1
;; Next process
```

If multiple registers are written to and a subsequent instruction should be executed after the write operations are entirely completed, only read the I/O register that was last written to and execute the operation using the value; it is not necessary to read or execute operation for all the registers that were written to.

(3) Number of Access Cycles to I/O Registers

For numbers of clock cycles for access to I/O registers, see Table 4.1, List of I/O Registers (Address Order).
The number of access cycles to I/O registers is obtained by following equation.*1

Number of access cycles to I/O registers = Number of bus cycles for internal main bus 1 +
Number of divided clock synchronization cycles +
Number of bus cycles for internal peripheral bus 1 to 6

The number of bus cycles of internal peripheral bus 1 to 6 differs according to the register to be accessed.
When peripheral functions connected to internal peripheral bus 2 to 6 are accessed, the number of divided clock synchronization cycles is added.
In the peripheral function unit, when the frequency ratio of ICLK is equal to or greater than that of PCLK (or FCLK), the sum of the number of bus cycles for internal main bus 1 and the number of the divided clock synchronization cycles will be one cycle of PCLK (or FCLK) at a maximum. Therefore, one PCLK (or FCLK) has been added to the number of access cycles shown in Table 4.1.

Note 1. This applies to the number of cycles when the access from the CPU does not conflict with the bus access from the different bus master (DTC).

(4) Restrictions in Relation to RMPA and String-Manipulation Instructions

The allocation of data to be handled by RMPA or string-manipulation instructions to I/O registers is prohibited, and operation is not guaranteed if this restriction is not observed.

(5) Notes on Sleep Mode and Mode Transitions

During sleep mode or mode transitions, do not write to the system control related registers (indicated by ‘SYSTEM’ in the Module Symbol column in Table 4.1, List of I/O Registers (Address Order)).

4.1 I/O Register Addresses (Address Order)

Table 4.1 List of I/O Registers (Address Order) (1/40)

Address	Module Symbol	Register Name	Register Symbol	Number of Bits	Access Size	Number of Access Cycles ICLK ≥ PCLK
0008 0000h	SYSTEM	Mode Monitor Register	MDMONR	16	16	3 ICLK
0008 0008h	SYSTEM	System Control Register 1	SYSCR1	16	16	3 ICLK
0008 000Ch	SYSTEM	Standby Control Register	SBYCR	16	16	3 ICLK
0008 0010h	SYSTEM	Module Stop Control Register A	MSTPCRA	32	32	3 ICLK
0008 0014h	SYSTEM	Module Stop Control Register B	MSTPCRB	32	32	3 ICLK
0008 0018h	SYSTEM	Module Stop Control Register C	MSTPCRC	32	32	3 ICLK
0008 0020h	SYSTEM	System Clock Control Register	SCKCR	32	32	3 ICLK
0008 0026h	SYSTEM	System Clock Control Register 3	SCKCR3	16	16	3 ICLK
0008 0028h	SYSTEM	PLL Control Register	PLLCR	16	16	3 ICLK
0008 002Ah	SYSTEM	PLL Control Register 2	PLLCR2	8	8	3 ICLK
0008 0031h	SYSTEM	Memory Wait Cycle Setting Register	MEMWAIT	8	8	3 ICLK
0008 0032h	SYSTEM	Main Clock Oscillator Control Register	MOSCCR	8	8	3 ICLK
0008 0034h	SYSTEM	Low-Speed On-Chip Oscillator Control Register	LOCOCR	8	8	3 ICLK
0008 0035h	SYSTEM	IWDT-Dedicated On-Chip Oscillator Control Register	ILOCOCR	8	8	3 ICLK
0008 0036h	SYSTEM	High-Speed On-Chip Oscillator Control Register	HOCOCR	8	8	3 ICLK
0008 0037h	SYSTEM	High-Speed On-Chip Oscillator Control Register 2	HOCOCR2	8	8	3 ICLK
0008 003Ch	SYSTEM	Oscillation Stabilization Flag Register	OSCOVFSR	8	8	3 ICLK
0008 0040h	SYSTEM	Oscillation Stop Detection Control Register	OSTDCR	8	8	3 ICLK
0008 0041h	SYSTEM	Oscillation Stop Detection Status Register	OSTDSR	8	8	3 ICLK
0008 00A0h	SYSTEM	Operating Power Control Register	OPCCR	8	8	3 ICLK
0008 00A2h	SYSTEM	Main Clock Oscillator Wait Control Register	MOSCWTCR	8	8	3 ICLK
0008 00A5h	SYSTEM	High-Speed On-Chip Oscillator Wait Control Register	HOCOWTCR	8	8	3 ICLK
0008 00C0h	SYSTEM	Reset Status Register 2	RSTSR2	8	8	3 ICLK
0008 00C2h	SYSTEM	Software Reset Register	SWRR	16	16	3 ICLK
0008 00E0h	SYSTEM	Voltage Monitoring 1 Circuit Control Register 1	LVD1CR1	8	8	3 ICLK
0008 00E1h	SYSTEM	Voltage Monitoring 1 Circuit Status Register	LVD1SR	8	8	3 ICLK
0008 00E2h	SYSTEM	Voltage Monitoring 2 Circuit Control Register 1	LVD2CR1	8	8	3 ICLK
0008 00E3h	SYSTEM	Voltage Monitoring 2 Circuit Status Register	LVD2SR	8	8	3 ICLK
0008 03FEh	SYSTEM	Protect Register	PRCR	16	16	3 ICLK
0008 1000h	FLASH	ROM Cache Enable Register	ROMCE	16	16	3 ICLK
0008 1004h	FLASH	ROM Cache Invalidate Register	ROMCIV	16	16	3 ICLK
0008 1300h	BSC	Bus Error Status Clear Register	BERCLR	8	8	2 ICLK
0008 1304h	BSC	Bus Error Monitoring Enable Register	BEREN	8	8	2 ICLK
0008 1308h	BSC	Bus Error Status Register 1	BERSR1	8	8	2 ICLK
0008 130Ah	BSC	Bus Error Status Register 2	BERSR2	16	16	2 ICLK
0008 1310h	BSC	Bus Priority Control Register	BUSPRI	16	16	2 ICLK
0008 2400h	DTC	DTC Control Register	DTCCR	8	8	2 ICLK
0008 2404h	DTC	DTC Vector Base Register	DTCVBR	32	32	2 ICLK
0008 2408h	DTC	DTC Address Mode Register	DTCADMOD	8	8	2 ICLK
0008 240Ch	DTC	DTC Module Start Register	DTCST	8	8	2 ICLK
0008 240Eh	DTC	DTC Status Register	DTCSTS	16	16	2 ICLK
0008 6400h	MPU	Region-0 Start Page Number Register	RSPAGE0	32	32	1 ICLK
0008 6404h	MPU	Region-0 End Page Number Register	REPAGE0	32	32	1 ICLK
0008 6408h	MPU	Region-1 Start Page Number Register	RSPAGE1	32	32	1 ICLK
0008 640Ch	MPU	Region-1 End Page Number Register	REPAGE1	32	32	1 ICLK
0008 6410h	MPU	Region-2 Start Page Number Register	RSPAGE2	32	32	1 ICLK
0008 6414h	MPU	Region-2 End Page Number Register	REPAGE2	32	32	1 ICLK
0008 6418h	MPU	Region-3 Start Page Number Register	RSPAGE3	32	32	1 ICLK
0008 641Ch	MPU	Region-3 End Page Number Register	REPAGE3	32	32	1 ICLK

Table 4.1 List of I/O Registers (Address Order) (2/40)

Address	Module Symbol	Register Name	Register Symbol	Number of Bits	Access Size	Number of Access Cycles ICLK ≥ PCLK
0008 6420h	MPU	Region-4 Start Page Number Register	RSPAGE4	32	32	1 ICLK
0008 6424h	MPU	Region-4 End Page Number Register	REPAGE4	32	32	1 ICLK
0008 6428h	MPU	Region-5 Start Page Number Register	RSPAGE5	32	32	1 ICLK
0008 642Ch	MPU	Region-5 End Page Number Register	REPAGE5	32	32	1 ICLK
0008 6430h	MPU	Region-6 Start Page Number Register	RSPAGE6	32	32	1 ICLK
0008 6434h	MPU	Region-6 End Page Number Register	REPAGE6	32	32	1 ICLK
0008 6438h	MPU	Region-7 Start Page Number Register	RSPAGE7	32	32	1 ICLK
0008 643Ch	MPU	Region-7 End Page Number Register	REPAGE7	32	32	1 ICLK
0008 6500h	MPU	Memory-Protection Enable Register	MPEN	32	32	1 ICLK
0008 6504h	MPU	Background Access Control Register	MPBAC	32	32	1 ICLK
0008 6508h	MPU	Memory-Protection Error Status-Clearing Register	MPECLR	32	32	1 ICLK
0008 650Ch	MPU	Memory-Protection Error Status Register	MPESTS	32	32	1 ICLK
0008 6514h	MPU	Data Memory-Protection Error Address Register	MPDEA	32	32	1 ICLK
0008 6520h	MPU	Region Search Address Register	MPSA	32	32	1 ICLK
0008 6524h	MPU	Region Search Operation Register	MPOPS	16	16	1 ICLK
0008 6526h	MPU	Region Invalidation Operation Register	MPOPI	16	16	1 ICLK
0008 6528h	MPU	Instruction-Hit Region Register	MHITI	32	32	1 ICLK
0008 652Ch	MPU	Data-Hit Region Register	MHITD	32	32	1 ICLK
0008 7010h	ICU	Interrupt Request Register 016	IR016	8	8	2 ICLK
0008 7017h	ICU	Interrupt Request Register 023	IR023	8	8	2 ICLK
0008 701Bh	ICU	Interrupt Request Register 027	IR027	8	8	2 ICLK
0008 701Ch	ICU	Interrupt Request Register 028	IR028	8	8	2 ICLK
0008 701Dh	ICU	Interrupt Request Register 029	IR029	8	8	2 ICLK
0008 701Eh	ICU	Interrupt Request Register 030	IR030	8	8	2 ICLK
0008 701Fh	ICU	Interrupt Request Register 031	IR031	8	8	2 ICLK
0008 7020h	ICU	Interrupt Request Register 032	IR032	8	8	2 ICLK
0008 7021h	ICU	Interrupt Request Register 033	IR033	8	8	2 ICLK
0008 7022h	ICU	Interrupt Request Register 034	IR034	8	8	2 ICLK
0008 7028h	ICU	Interrupt Request Register 040	IR040	8	8	2 ICLK
0008 7029h	ICU	Interrupt Request Register 041	IR041	8	8	2 ICLK
0008 702Ch	ICU	Interrupt Request Register 044	IR044	8	8	2 ICLK
0008 702Dh	ICU	Interrupt Request Register 045	IR045	8	8	2 ICLK
0008 702Eh	ICU	Interrupt Request Register 046	IR046	8	8	2 ICLK
0008 702Fh	ICU	Interrupt Request Register 047	IR047	8	8	2 ICLK
0008 7030h	ICU	Interrupt Request Register 048	IR048	8	8	2 ICLK
0008 7031h	ICU	Interrupt Request Register 049	IR049	8	8	2 ICLK
0008 7032h	ICU	Interrupt Request Register 050	IR050	8	8	2 ICLK
0008 7033h	ICU	Interrupt Request Register 051	IR051	8	8	2 ICLK
0008 7034h	ICU	Interrupt Request Register 052	IR052	8	8	2 ICLK
0008 7035h	ICU	Interrupt Request Register 053	IR053	8	8	2 ICLK
0008 7036h	ICU	Interrupt Request Register 054	IR054	8	8	2 ICLK
0008 7037h	ICU	Interrupt Request Register 055	IR055	8	8	2 ICLK
0008 7038h	ICU	Interrupt Request Register 056	IR056	8	8	2 ICLK
0008 7039h	ICU	Interrupt Request Register 057	IR057	8	8	2 ICLK
0008 703Bh	ICU	Interrupt Request Register 059	IR059	8	8	2 ICLK
0008 703Ch	ICU	Interrupt Request Register 060	IR060	8	8	2 ICLK
0008 703Dh	ICU	Interrupt Request Register 061	IR061	8	8	2 ICLK
0008 703Eh	ICU	Interrupt Request Register 062	IR062	8	8	2 ICLK
0008 703Fh	ICU	Interrupt Request Register 063	IR063	8	8	2 ICLK
0008 7040h	ICU	Interrupt Request Register 064	IR064	8	8	2 ICLK
0008 7041h	ICU	Interrupt Request Register 065	IR065	8	8	2 ICLK
0008 7042h	ICU	Interrupt Request Register 066	IR066	8	8	2 ICLK

Table 4.1 List of I/O Registers (Address Order) (3/40)

Address	Module Symbol	Register Name	Register Symbol	Number of Bits	Access Size	Number of Access Cycles ICLK ≥ PCLK
0008 7043h	ICU	Interrupt Request Register 067	IR067	8	8	2 ICLK
0008 7044h	ICU	Interrupt Request Register 068	IR068	8	8	2 ICLK
0008 7045h	ICU	Interrupt Request Register 069	IR069	8	8	2 ICLK
0008 7046h	ICU	Interrupt Request Register 070	IR070	8	8	2 ICLK
0008 7047h	ICU	Interrupt Request Register 071	IR071	8	8	2 ICLK
0008 7058h	ICU	Interrupt Request Register 088	IR088	8	8	2 ICLK
0008 7059h	ICU	Interrupt Request Register 089	IR089	8	8	2 ICLK
0008 7062h	ICU	Interrupt Request Register 098	IR098	8	8	2 ICLK
0008 7063h	ICU	Interrupt Request Register 099	IR099	8	8	2 ICLK
0008 7064h	ICU	Interrupt Request Register 100	IR100	8	8	2 ICLK
0008 7065h	ICU	Interrupt Request Register 101	IR101	8	8	2 ICLK
0008 7066h	ICU	Interrupt Request Register 102	IR102	8	8	2 ICLK
0008 7067h	ICU	Interrupt Request Register 103	IR103	8	8	2 ICLK
0008 7068h	ICU	Interrupt Request Register 104	IR104	8	8	2 ICLK
0008 7069h	ICU	Interrupt Request Register 105	IR105	8	8	2 ICLK
0008 706Ah	ICU	Interrupt Request Register 106	IR106	8	8	2 ICLK
0008 706Bh	ICU	Interrupt Request Register 107	IR107	8	8	2 ICLK
0008 706Ch	ICU	Interrupt Request Register 108	IR108	8	8	2 ICLK
0008 706Dh	ICU	Interrupt Request Register 109	IR109	8	8	2 ICLK
0008 706Eh	ICU	Interrupt Request Register 110	IR110	8	8	2 ICLK
0008 706Fh	ICU	Interrupt Request Register 111	IR111	8	8	2 ICLK
0008 7070h	ICU	Interrupt Request Register 112	IR112	8	8	2 ICLK
0008 7071h	ICU	Interrupt Request Register 113	IR113	8	8	2 ICLK
0008 7072h	ICU	Interrupt Request Register 114	IR114	8	8	2 ICLK
0008 7073h	ICU	Interrupt Request Register 115	IR115	8	8	2 ICLK
0008 7074h	ICU	Interrupt Request Register 116	IR116	8	8	2 ICLK
0008 7075h	ICU	Interrupt Request Register 117	IR117	8	8	2 ICLK
0008 7076h	ICU	Interrupt Request Register 118	IR118	8	8	2 ICLK
0008 7077h	ICU	Interrupt Request Register 119	IR119	8	8	2 ICLK
0008 7078h	ICU	Interrupt Request Register 120	IR120	8	8	2 ICLK
0008 7079h	ICU	Interrupt Request Register 121	IR121	8	8	2 ICLK
0008 707Ah	ICU	Interrupt Request Register 122	IR122	8	8	2 ICLK
0008 707Bh	ICU	Interrupt Request Register 123	IR123	8	8	2 ICLK
0008 707Ch	ICU	Interrupt Request Register 124	IR124	8	8	2 ICLK
0008 707Dh	ICU	Interrupt Request Register 125	IR125	8	8	2 ICLK
0008 707Eh	ICU	Interrupt Request Register 126	IR126	8	8	2 ICLK
0008 707Fh	ICU	Interrupt Request Register 127	IR127	8	8	2 ICLK
0008 7080h	ICU	Interrupt Request Register 128	IR128	8	8	2 ICLK
0008 7081h	ICU	Interrupt Request Register 129	IR129	8	8	2 ICLK
0008 7082h	ICU	Interrupt Request Register 130	IR130	8	8	2 ICLK
0008 7083h	ICU	Interrupt Request Register 131	IR131	8	8	2 ICLK
0008 7084h	ICU	Interrupt Request Register 132	IR132	8	8	2 ICLK
0008 7085h	ICU	Interrupt Request Register 133	IR133	8	8	2 ICLK
0008 7086h	ICU	Interrupt Request Register 134	IR134	8	8	2 ICLK
0008 7087h	ICU	Interrupt Request Register 135	IR135	8	8	2 ICLK
0008 7088h	ICU	Interrupt Request Register 136	IR136	8	8	2 ICLK
0008 7089h	ICU	Interrupt Request Register 137	IR137	8	8	2 ICLK
0008 708Ah	ICU	Interrupt Request Register 138	IR138	8	8	2 ICLK
0008 708Bh	ICU	Interrupt Request Register 139	IR139	8	8	2 ICLK
0008 708Ch	ICU	Interrupt Request Register 140	IR140	8	8	2 ICLK
0008 708Dh	ICU	Interrupt Request Register 141	IR141	8	8	2 ICLK
0008 708Eh	ICU	Interrupt Request Register 142	IR142	8	8	2 ICLK

Table 4.1 List of I/O Registers (Address Order) (4/40)

Address	Module Symbol	Register Name	Register Symbol	Number of Bits	Access Size	Number of Access Cycles ICLK ≥ PCLK
0008 708Fh	ICU	Interrupt Request Register 143	IR143	8	8	2 ICLK
0008 7090h	ICU	Interrupt Request Register 144	IR144	8	8	2 ICLK
0008 7091h	ICU	Interrupt Request Register 145	IR145	8	8	2 ICLK
0008 7092h	ICU	Interrupt Request Register 146	IR146	8	8	2 ICLK
0008 7095h	ICU	Interrupt Request Register 149	IR149	8	8	2 ICLK
0008 7096h	ICU	Interrupt Request Register 150	IR150	8	8	2 ICLK
0008 7097h	ICU	Interrupt Request Register 151	IR151	8	8	2 ICLK
0008 7098h	ICU	Interrupt Request Register 152	IR152	8	8	2 ICLK
0008 7099h	ICU	Interrupt Request Register 153	IR153	8	8	2 ICLK
0008 709Fh	ICU	Interrupt Request Register 159	IR159	8	8	2 ICLK
0008 70A0h	ICU	Interrupt Request Register 160	IR160	8	8	2 ICLK
0008 70A1h	ICU	Interrupt Request Register 161	IR161	8	8	2 ICLK
0008 70A2h	ICU	Interrupt Request Register 162	IR162	8	8	2 ICLK
0008 70A3h	ICU	Interrupt Request Register 163	IR163	8	8	2 ICLK
0008 70A4h	ICU	Interrupt Request Register 164	IR164	8	8	2 ICLK
0008 70A5h	ICU	Interrupt Request Register 165	IR165	8	8	2 ICLK
0008 70A8h	ICU	Interrupt Request Register 168	IR168	8	8	2 ICLK
0008 70A9h	ICU	Interrupt Request Register 169	IR169	8	8	2 ICLK
0008 70AAh	ICU	Interrupt Request Register 170	IR170	8	8	2 ICLK
0008 70ABh	ICU	Interrupt Request Register 171	IR171	8	8	2 ICLK
0008 70ACh	ICU	Interrupt Request Register 172	IR172	8	8	2 ICLK
0008 70ADh	ICU	Interrupt Request Register 173	IR173	8	8	2 ICLK
0008 70AEh	ICU	Interrupt Request Register 174	IR174	8	8	2 ICLK
0008 70AFh	ICU	Interrupt Request Register 175	IR175	8	8	2 ICLK
0008 70B0h	ICU	Interrupt Request Register 176	IR176	8	8	2 ICLK
0008 70B1h	ICU	Interrupt Request Register 177	IR177	8	8	2 ICLK
0008 70B2h	ICU	Interrupt Request Register 178	IR178	8	8	2 ICLK
0008 70B3h	ICU	Interrupt Request Register 179	IR179	8	8	2 ICLK
0008 70B4h	ICU	Interrupt Request Register 180	IR180	8	8	2 ICLK
0008 70B5h	ICU	Interrupt Request Register 181	IR181	8	8	2 ICLK
0008 70B6h	ICU	Interrupt Request Register 182	IR182	8	8	2 ICLK
0008 70B7h	ICU	Interrupt Request Register 183	IR183	8	8	2 ICLK
0008 70B8h	ICU	Interrupt Request Register 184	IR184	8	8	2 ICLK
0008 70B9h	ICU	Interrupt Request Register 185	IR185	8	8	2 ICLK
0008 70BAh	ICU	Interrupt Request Register 186	IR186	8	8	2 ICLK
0008 70BBh	ICU	Interrupt Request Register 187	IR187	8	8	2 ICLK
0008 70BCh	ICU	Interrupt Request Register 188	IR188	8	8	2 ICLK
0008 70BDh	ICU	Interrupt Request Register 189	IR189	8	8	2 ICLK
0008 70BEh	ICU	Interrupt Request Register 190	IR190	8	8	2 ICLK
0008 70BFh	ICU	Interrupt Request Register 191	IR191	8	8	2 ICLK
0008 70C0h	ICU	Interrupt Request Register 192	IR192	8	8	2 ICLK
0008 70C1h	ICU	Interrupt Request Register 193	IR193	8	8	2 ICLK
0008 70C2h	ICU	Interrupt Request Register 194	IR194	8	8	2 ICLK
0008 70C3h	ICU	Interrupt Request Register 195	IR195	8	8	2 ICLK
0008 70C4h	ICU	Interrupt Request Register 196	IR196	8	8	2 ICLK
0008 70C5h	ICU	Interrupt Request Register 197	IR197	8	8	2 ICLK
0008 70CAh	ICU	Interrupt Request Register 202	IR202	8	8	2 ICLK
0008 70CBh	ICU	Interrupt Request Register 203	IR203	8	8	2 ICLK
0008 70CCh	ICU	Interrupt Request Register 204	IR204	8	8	2 ICLK
0008 70CDh	ICU	Interrupt Request Register 205	IR205	8	8	2 ICLK
0008 70CEh	ICU	Interrupt Request Register 206	IR206	8	8	2 ICLK
0008 70CFh	ICU	Interrupt Request Register 207	IR207	8	8	2 ICLK

Table 4.1 List of I/O Registers (Address Order) (5/40)

Address	Module Symbol	Register Name	Register Symbol	Number of Bits	Access Size	Number of Access Cycles ICLK ≥ PCLK
0008 70D0h	ICU	Interrupt Request Register 208	IR208	8	8	2 ICLK
0008 70D1h	ICU	Interrupt Request Register 209	IR209	8	8	2 ICLK
0008 70D2h	ICU	Interrupt Request Register 210	IR210	8	8	2 ICLK
0008 70D3h	ICU	Interrupt Request Register 211	IR211	8	8	2 ICLK
0008 70D4h	ICU	Interrupt Request Register 212	IR212	8	8	2 ICLK
0008 70D5h	ICU	Interrupt Request Register 213	IR213	8	8	2 ICLK
0008 70D6h	ICU	Interrupt Request Register 214	IR214	8	8	2 ICLK
0008 70D7h	ICU	Interrupt Request Register 215	IR215	8	8	2 ICLK
0008 70D8h	ICU	Interrupt Request Register 216	IR216	8	8	2 ICLK
0008 70D9h	ICU	Interrupt Request Register 217	IR217	8	8	2 ICLK
0008 70DAh	ICU	Interrupt Request Register 218	IR218	8	8	2 ICLK
0008 70DBh	ICU	Interrupt Request Register 219	IR219	8	8	2 ICLK
0008 70DCh	ICU	Interrupt Request Register 220	IR220	8	8	2 ICLK
0008 70DDh	ICU	Interrupt Request Register 221	IR221	8	8	2 ICLK
0008 70DEh	ICU	Interrupt Request Register 222	IR222	8	8	2 ICLK
0008 70DFh	ICU	Interrupt Request Register 223	IR223	8	8	2 ICLK
0008 70E0h	ICU	Interrupt Request Register 224	IR224	8	8	2 ICLK
0008 70E1h	ICU	Interrupt Request Register 225	IR225	8	8	2 ICLK
0008 70E2h	ICU	Interrupt Request Register 226	IR226	8	8	2 ICLK
0008 70E3h	ICU	Interrupt Request Register 227	IR227	8	8	2 ICLK
0008 70E4h	ICU	Interrupt Request Register 228	IR228	8	8	2 ICLK
0008 70E5h	ICU	Interrupt Request Register 229	IR229	8	8	2 ICLK
0008 70E6h	ICU	Interrupt Request Register 230	IR230	8	8	2 ICLK
0008 70E7h	ICU	Interrupt Request Register 231	IR231	8	8	2 ICLK
0008 70E8h	ICU	Interrupt Request Register 232	IR232	8	8	2 ICLK
0008 70E9h	ICU	Interrupt Request Register 233	IR233	8	8	2 ICLK
0008 70EAh	ICU	Interrupt Request Register 234	IR234	8	8	2 ICLK
0008 70EBh	ICU	Interrupt Request Register 235	IR235	8	8	2 ICLK
0008 70ECh	ICU	Interrupt Request Register 236	IR236	8	8	2 ICLK
0008 70EDh	ICU	Interrupt Request Register 237	IR237	8	8	2 ICLK
0008 70EEh	ICU	Interrupt Request Register 238	IR238	8	8	2 ICLK
0008 70EFh	ICU	Interrupt Request Register 239	IR239	8	8	2 ICLK
0008 70F0h	ICU	Interrupt Request Register 240	IR240	8	8	2 ICLK
0008 70F1h	ICU	Interrupt Request Register 241	IR241	8	8	2 ICLK
0008 70F2h	ICU	Interrupt Request Register 242	IR242	8	8	2 ICLK
0008 70F3h	ICU	Interrupt Request Register 243	IR243	8	8	2 ICLK
0008 70F4h	ICU	Interrupt Request Register 244	IR244	8	8	2 ICLK
0008 70F6h	ICU	Interrupt Request Register 246	IR246	8	8	2 ICLK
0008 70F7h	ICU	Interrupt Request Register 247	IR247	8	8	2 ICLK
0008 70F8h	ICU	Interrupt Request Register 248	IR248	8	8	2 ICLK
0008 70F9h	ICU	Interrupt Request Register 249	IR249	8	8	2 ICLK
0008 70FAh	ICU	Interrupt Request Register 250	IR250	8	8	2 ICLK
0008 70FBh	ICU	Interrupt Request Register 251	IR251	8	8	2 ICLK
0008 70FCh	ICU	Interrupt Request Register 252	IR252	8	8	2 ICLK
0008 70FDh	ICU	Interrupt Request Register 253	IR253	8	8	2 ICLK
0008 711Bh	ICU	DTC Transfer Request Enable Register 027	DTCER027	8	8	2 ICLK
0008 711Ch	ICU	DTC Transfer Request Enable Register 028	DTCER028	8	8	2 ICLK
0008 711Dh	ICU	DTC Transfer Request Enable Register 029	DTCER029	8	8	2 ICLK
0008 711Eh	ICU	DTC Transfer Request Enable Register 030	DTCER030	8	8	2 ICLK
0008 711Fh	ICU	DTC Transfer Request Enable Register 031	DTCER031	8	8	2 ICLK
0008 712Dh	ICU	DTC Transfer Request Enable Register 045	DTCER045	8	8	2 ICLK
0008 712Eh	ICU	DTC Transfer Request Enable Register 046	DTCER046	8	8	2 ICLK

Table 4.1 List of I/O Registers (Address Order) (6/40)

Address	Module Symbol	Register Name	Register Symbol	Number of Bits	Access Size	Number of Access Cycles ICLK ≥ PCLK
0008 7130h	ICU	DTC Transfer Request Enable Register 048	DTCER048	8	8	2 ICLK
0008 7131h	ICU	DTC Transfer Request Enable Register 049	DTCER049	8	8	2 ICLK
0008 7132h	ICU	DTC Transfer Request Enable Register 050	DTCER050	8	8	2 ICLK
0008 7133h	ICU	DTC Transfer Request Enable Register 051	DTCER051	8	8	2 ICLK
0008 7135h	ICU	DTC Transfer Request Enable Register 053	DTCER053	8	8	2 ICLK
0008 7136h	ICU	DTC Transfer Request Enable Register 054	DTCER054	8	8	2 ICLK
0008 7137h	ICU	DTC Transfer Request Enable Register 055	DTCER055	8	8	2 ICLK
0008 7138h	ICU	DTC Transfer Request Enable Register 056	DTCER056	8	8	2 ICLK
0008 713Bh	ICU	DTC Transfer Request Enable Register 059	DTCER059	8	8	2 ICLK
0008 7140h	ICU	DTC Transfer Request Enable Register 064	DTCER064	8	8	2 ICLK
0008 7141h	ICU	DTC Transfer Request Enable Register 065	DTCER065	8	8	2 ICLK
0008 7142h	ICU	DTC Transfer Request Enable Register 066	DTCER066	8	8	2 ICLK
0008 7143h	ICU	DTC Transfer Request Enable Register 067	DTCER067	8	8	2 ICLK
0008 7144h	ICU	DTC Transfer Request Enable Register 068	DTCER068	8	8	2 ICLK
0008 7145h	ICU	DTC Transfer Request Enable Register 069	DTCER069	8	8	2 ICLK
0008 7146h	ICU	DTC Transfer Request Enable Register 070	DTCER070	8	8	2 ICLK
0008 7147h	ICU	DTC Transfer Request Enable Register 071	DTCER071	8	8	2 ICLK
0008 7162h	ICU	DTC Transfer Request Enable Register 098	DTCER098	8	8	2 ICLK
0008 7163h	ICU	DTC Transfer Request Enable Register 099	DTCER099	8	8	2 ICLK
0008 7164h	ICU	DTC Transfer Request Enable Register 100	DTCER100	8	8	2 ICLK
0008 7165h	ICU	DTC Transfer Request Enable Register 101	DTCER101	8	8	2 ICLK
0008 7166h	ICU	DTC Transfer Request Enable Register 102	DTCER102	8	8	2 ICLK
0008 7167h	ICU	DTC Transfer Request Enable Register 103	DTCER103	8	8	2 ICLK
0008 7168h	ICU	DTC Transfer Request Enable Register 104	DTCER104	8	8	2 ICLK
0008 7169h	ICU	DTC Transfer Request Enable Register 105	DTCER105	8	8	2 ICLK
0008 716Ah	ICU	DTC Transfer Request Enable Register 106	DTCER106	8	8	2 ICLK
0008 716Bh	ICU	DTC Transfer Request Enable Register 107	DTCER107	8	8	2 ICLK
0008 716Ch	ICU	DTC Transfer Request Enable Register 108	DTCER108	8	8	2 ICLK
0008 716Dh	ICU	DTC Transfer Request Enable Register 109	DTCER109	8	8	2 ICLK
0008 716Eh	ICU	DTC Transfer Request Enable Register 110	DTCER110	8	8	2 ICLK
0008 716Fh	ICU	DTC Transfer Request Enable Register 111	DTCER111	8	8	2 ICLK
0008 7170h	ICU	DTC Transfer Request Enable Register 112	DTCER112	8	8	2 ICLK
0008 7171h	ICU	DTC Transfer Request Enable Register 113	DTCER113	8	8	2 ICLK
0008 7172h	ICU	DTC Transfer Request Enable Register 114	DTCER114	8	8	2 ICLK
0008 7173h	ICU	DTC Transfer Request Enable Register 115	DTCER115	8	8	2 ICLK
0008 7174h	ICU	DTC Transfer Request Enable Register 116	DTCER116	8	8	2 ICLK
0008 7175h	ICU	DTC Transfer Request Enable Register 117	DTCER117	8	8	2 ICLK
0008 7179h	ICU	DTC Transfer Request Enable Register 121	DTCER121	8	8	2 ICLK
0008 717Ah	ICU	DTC Transfer Request Enable Register 122	DTCER122	8	8	2 ICLK
0008 717Dh	ICU	DTC Transfer Request Enable Register 125	DTCER125	8	8	2 ICLK
0008 717Eh	ICU	DTC Transfer Request Enable Register 126	DTCER126	8	8	2 ICLK
0008 7181h	ICU	DTC Transfer Request Enable Register 129	DTCER129	8	8	2 ICLK
0008 7182h	ICU	DTC Transfer Request Enable Register 130	DTCER130	8	8	2 ICLK
0008 7183h	ICU	DTC Transfer Request Enable Register 131	DTCER131	8	8	2 ICLK
0008 7184h	ICU	DTC Transfer Request Enable Register 132	DTCER132	8	8	2 ICLK
0008 7186h	ICU	DTC Transfer Request Enable Register 134	DTCER134	8	8	2 ICLK
0008 7187h	ICU	DTC Transfer Request Enable Register 135	DTCER135	8	8	2 ICLK
0008 7188h	ICU	DTC Transfer Request Enable Register 136	DTCER136	8	8	2 ICLK
0008 7189h	ICU	DTC Transfer Request Enable Register 137	DTCER137	8	8	2 ICLK
0008 718Ah	ICU	DTC Transfer Request Enable Register 138	DTCER138	8	8	2 ICLK
0008 718Bh	ICU	DTC Transfer Request Enable Register 139	DTCER139	8	8	2 ICLK
0008 718Ch	ICU	DTC Transfer Request Enable Register 140	DTCER140	8	8	2 ICLK

Table 4.1 List of I/O Registers (Address Order) (7/40)

Address	Module Symbol	Register Name	Register Symbol	Number of Bits	Access Size	Number of Access Cycles ICLK ≥ PCLK
0008 718Dh	ICU	DTC Transfer Request Enable Register 141	DTCER141	8	8	2 ICLK
0008 718Eh	ICU	DTC Transfer Request Enable Register 142	DTCER142	8	8	2 ICLK
0008 718Fh	ICU	DTC Transfer Request Enable Register 143	DTCER143	8	8	2 ICLK
0008 7190h	ICU	DTC Transfer Request Enable Register 144	DTCER144	8	8	2 ICLK
0008 7191h	ICU	DTC Transfer Request Enable Register 145	DTCER145	8	8	2 ICLK
0008 7195h	ICU	DTC Transfer Request Enable Register 149	DTCER149	8	8	2 ICLK
0008 7196h	ICU	DTC Transfer Request Enable Register 150	DTCER150	8	8	2 ICLK
0008 7197h	ICU	DTC Transfer Request Enable Register 151	DTCER151	8	8	2 ICLK
0008 7198h	ICU	DTC Transfer Request Enable Register 152	DTCER152	8	8	2 ICLK
0008 7199h	ICU	DTC Transfer Request Enable Register 153	DTCER153	8	8	2 ICLK
0008 719Fh	ICU	DTC Transfer Request Enable Register 159	DTCER159	8	8	2 ICLK
0008 71A0h	ICU	DTC Transfer Request Enable Register 160	DTCER160	8	8	2 ICLK
0008 71A1h	ICU	DTC Transfer Request Enable Register 161	DTCER161	8	8	2 ICLK
0008 71A2h	ICU	DTC Transfer Request Enable Register 162	DTCER162	8	8	2 ICLK
0008 71ADh	ICU	DTC Transfer Request Enable Register 173	DTCER173	8	8	2 ICLK
0008 71AEh	ICU	DTC Transfer Request Enable Register 174	DTCER174	8	8	2 ICLK
0008 71AFh	ICU	DTC Transfer Request Enable Register 175	DTCER175	8	8	2 ICLK
0008 71B1h	ICU	DTC Transfer Request Enable Register 177	DTCER177	8	8	2 ICLK
0008 71B2h	ICU	DTC Transfer Request Enable Register 178	DTCER178	8	8	2 ICLK
0008 71B4h	ICU	DTC Transfer Request Enable Register 180	DTCER180	8	8	2 ICLK
0008 71B5h	ICU	DTC Transfer Request Enable Register 181	DTCER181	8	8	2 ICLK
0008 71B7h	ICU	DTC Transfer Request Enable Register 183	DTCER183	8	8	2 ICLK
0008 71B8h	ICU	DTC Transfer Request Enable Register 184	DTCER184	8	8	2 ICLK
0008 71BAh	ICU	DTC Transfer Request Enable Register 186	DTCER186	8	8	2 ICLK
0008 71BBh	ICU	DTC Transfer Request Enable Register 187	DTCER187	8	8	2 ICLK
0008 71BDh	ICU	DTC Transfer Request Enable Register 189	DTCER189	8	8	2 ICLK
0008 71BEh	ICU	DTC Transfer Request Enable Register 190	DTCER190	8	8	2 ICLK
0008 71C0h	ICU	DTC Transfer Request Enable Register 192	DTCER192	8	8	2 ICLK
0008 71C1h	ICU	DTC Transfer Request Enable Register 193	DTCER193	8	8	2 ICLK
0008 71C3h	ICU	DTC Transfer Request Enable Register 195	DTCER195	8	8	2 ICLK
0008 71C4h	ICU	DTC Transfer Request Enable Register 196	DTCER196	8	8	2 ICLK
0008 71CBh	ICU	DTC Transfer Request Enable Register 203	DTCER203	8	8	2 ICLK
0008 71CCh	ICU	DTC Transfer Request Enable Register 204	DTCER204	8	8	2 ICLK
0008 71CDh	ICU	DTC Transfer Request Enable Register 205	DTCER205	8	8	2 ICLK
0008 71CEh	ICU	DTC Transfer Request Enable Register 206	DTCER206	8	8	2 ICLK
0008 71CFh	ICU	DTC Transfer Request Enable Register 207	DTCER207	8	8	2 ICLK
0008 71D0h	ICU	DTC Transfer Request Enable Register 208	DTCER208	8	8	2 ICLK
0008 71D1h	ICU	DTC Transfer Request Enable Register 209	DTCER209	8	8	2 ICLK
0008 71D2h	ICU	DTC Transfer Request Enable Register 210	DTCER210	8	8	2 ICLK
0008 71D4h	ICU	DTC Transfer Request Enable Register 212	DTCER212	8	8	2 ICLK
0008 71D5h	ICU	DTC Transfer Request Enable Register 213	DTCER213	8	8	2 ICLK
0008 71D6h	ICU	DTC Transfer Request Enable Register 214	DTCER214	8	8	2 ICLK
0008 71D7h	ICU	DTC Transfer Request Enable Register 215	DTCER215	8	8	2 ICLK
0008 71D8h	ICU	DTC Transfer Request Enable Register 216	DTCER216	8	8	2 ICLK
0008 71D9h	ICU	DTC Transfer Request Enable Register 217	DTCER217	8	8	2 ICLK
0008 71DBh	ICU	DTC Transfer Request Enable Register 219	DTCER219	8	8	2 ICLK
0008 71DCh	ICU	DTC Transfer Request Enable Register 220	DTCER220	8	8	2 ICLK
0008 71DFh	ICU	DTC Transfer Request Enable Register 223	DTCER223	8	8	2 ICLK
0008 71E0h	ICU	DTC Transfer Request Enable Register 224	DTCER224	8	8	2 ICLK
0008 71E3h	ICU	DTC Transfer Request Enable Register 227	DTCER227	8	8	2 ICLK
0008 71E4h	ICU	DTC Transfer Request Enable Register 228	DTCER228	8	8	2 ICLK
0008 71E7h	ICU	DTC Transfer Request Enable Register 231	DTCER231	8	8	2 ICLK

Table 4.1 List of I/O Registers (Address Order) (8/40)

Address	Module Symbol	Register Name	Register Symbol	Number of Bits	Access Size	Number of Access Cycles ICLK ≥ PCLK
0008 71E8h	ICU	DTC Transfer Request Enable Register 232	DTCER232	8	8	2 ICLK
0008 71EBh	ICU	DTC Transfer Request Enable Register 235	DTCER235	8	8	2 ICLK
0008 71ECh	ICU	DTC Transfer Request Enable Register 236	DTCER236	8	8	2 ICLK
0008 71EEh	ICU	DTC Transfer Request Enable Register 238	DTCER238	8	8	2 ICLK
0008 71EFh	ICU	DTC Transfer Request Enable Register 239	DTCER239	8	8	2 ICLK
0008 71F1h	ICU	DTC Transfer Request Enable Register 241	DTCER241	8	8	2 ICLK
0008 71F2h	ICU	DTC Transfer Request Enable Register 242	DTCER242	8	8	2 ICLK
0008 71F3h	ICU	DTC Transfer Request Enable Register 243	DTCER243	8	8	2 ICLK
0008 71F4h	ICU	DTC Transfer Request Enable Register 244	DTCER244	8	8	2 ICLK
0008 71F7h	ICU	DTC Transfer Request Enable Register 247	DTCER247	8	8	2 ICLK
0008 71F8h	ICU	DTC Transfer Request Enable Register 248	DTCER248	8	8	2 ICLK
0008 71FBh	ICU	DTC Transfer Request Enable Register 251	DTCER251	8	8	2 ICLK
0008 71FCh	ICU	DTC Transfer Request Enable Register 252	DTCER252	8	8	2 ICLK
0008 7202h	ICU	Interrupt Request Enable Register 02	IER02	8	8	2 ICLK
0008 7203h	ICU	Interrupt Request Enable Register 03	IER03	8	8	2 ICLK
0008 7204h	ICU	Interrupt Request Enable Register 04	IER04	8	8	2 ICLK
0008 7205h	ICU	Interrupt Request Enable Register 05	IER05	8	8	2 ICLK
0008 7206h	ICU	Interrupt Request Enable Register 06	IER06	8	8	2 ICLK
0008 7207h	ICU	Interrupt Request Enable Register 07	IER07	8	8	2 ICLK
0008 7208h	ICU	Interrupt Request Enable Register 08	IER08	8	8	2 ICLK
0008 720Bh	ICU	Interrupt Request Enable Register 0B	IER0B	8	8	2 ICLK
0008 720Ch	ICU	Interrupt Request Enable Register 0C	IER0C	8	8	2 ICLK
0008 720Dh	ICU	Interrupt Request Enable Register 0D	IER0D	8	8	2 ICLK
0008 720Eh	ICU	Interrupt Request Enable Register 0E	IER0E	8	8	2 ICLK
0008 720Fh	ICU	Interrupt Request Enable Register 0F	IER0F	8	8	2 ICLK
0008 7210h	ICU	Interrupt Request Enable Register 10	IER10	8	8	2 ICLK
0008 7211h	ICU	Interrupt Request Enable Register 11	IER11	8	8	2 ICLK
0008 7212h	ICU	Interrupt Request Enable Register 12	IER12	8	8	2 ICLK
0008 7213h	ICU	Interrupt Request Enable Register 13	IER13	8	8	2 ICLK
0008 7214h	ICU	Interrupt Request Enable Register 14	IER14	8	8	2 ICLK
0008 7215h	ICU	Interrupt Request Enable Register 15	IER15	8	8	2 ICLK
0008 7216h	ICU	Interrupt Request Enable Register 16	IER16	8	8	2 ICLK
0008 7217h	ICU	Interrupt Request Enable Register 17	IER17	8	8	2 ICLK
0008 7218h	ICU	Interrupt Request Enable Register 18	IER18	8	8	2 ICLK
0008 7219h	ICU	Interrupt Request Enable Register 19	IER19	8	8	2 ICLK
0008 721Ah	ICU	Interrupt Request Enable Register 1A	IER1A	8	8	2 ICLK
0008 721Bh	ICU	Interrupt Request Enable Register 1B	IER1B	8	8	2 ICLK
0008 721Ch	ICU	Interrupt Request Enable Register 1C	IER1C	8	8	2 ICLK
0008 721Dh	ICU	Interrupt Request Enable Register 1D	IER1D	8	8	2 ICLK
0008 721Eh	ICU	Interrupt Request Enable Register 1E	IER1E	8	8	2 ICLK
0008 721Fh	ICU	Interrupt Request Enable Register 1F	IER1F	8	8	2 ICLK
0008 72E0h	ICU	Software Interrupt Generation Register	SWINTR	8	8	2 ICLK
0008 72F0h	ICU	Fast Interrupt Set Register	FIR	16	16	2 ICLK
0008 7300h	ICU	Interrupt Source Priority Register 000	IPR000	8	8	2 ICLK
0008 7302h	ICU	Interrupt Source Priority Register 002	IPR002	8	8	2 ICLK
0008 7303h	ICU	Interrupt Source Priority Register 003	IPR003	8	8	2 ICLK
0008 7304h	ICU	Interrupt Source Priority Register 004	IPR004	8	8	2 ICLK
0008 7305h	ICU	Interrupt Source Priority Register 005	IPR005	8	8	2 ICLK
0008 7306h	ICU	Interrupt Source Priority Register 006	IPR006	8	8	2 ICLK
0008 7307h	ICU	Interrupt Source Priority Register 007	IPR007	8	8	2 ICLK
0008 7320h	ICU	Interrupt Source Priority Register 032	IPR032	8	8	2 ICLK
0008 7321h	ICU	Interrupt Source Priority Register 033	IPR033	8	8	2 ICLK

Table 4.1 List of I/O Registers (Address Order) (9/40)

Address	Module Symbol	Register Name	Register Symbol	Number of Bits	Access Size	Number of Access Cycles ICLK ≥ PCLK
0008 7322h	ICU	Interrupt Source Priority Register 034	IPR034	8	8	2 ICLK
0008 7328h	ICU	Interrupt Source Priority Register 040	IPR040	8	8	2 ICLK
0008 7329h	ICU	Interrupt Source Priority Register 041	IPR041	8	8	2 ICLK
0008 732Ch	ICU	Interrupt Source Priority Register 044	IPR044	8	8	2 ICLK
0008 7330h	ICU	Interrupt Source Priority Register 048	IPR048	8	8	2 ICLK
0008 7331h	ICU	Interrupt Source Priority Register 049	IPR049	8	8	2 ICLK
0008 7332h	ICU	Interrupt Source Priority Register 050	IPR050	8	8	2 ICLK
0008 7333h	ICU	Interrupt Source Priority Register 051	IPR051	8	8	2 ICLK
0008 7334h	ICU	Interrupt Source Priority Register 052	IPR052	8	8	2 ICLK
0008 7335h	ICU	Interrupt Source Priority Register 053	IPR053	8	8	2 ICLK
0008 7336h	ICU	Interrupt Source Priority Register 054	IPR054	8	8	2 ICLK
0008 7337h	ICU	Interrupt Source Priority Register 055	IPR055	8	8	2 ICLK
0008 7338h	ICU	Interrupt Source Priority Register 056	IPR056	8	8	2 ICLK
0008 7339h	ICU	Interrupt Source Priority Register 057	IPR057	8	8	2 ICLK
0008 733Bh	ICU	Interrupt Source Priority Register 059	IPR059	8	8	2 ICLK
0008 733Ch	ICU	Interrupt Source Priority Register 060	IPR060	8	8	2 ICLK
0008 733Dh	ICU	Interrupt Source Priority Register 061	IPR061	8	8	2 ICLK
0008 733Eh	ICU	Interrupt Source Priority Register 062	IPR062	8	8	2 ICLK
0008 733Fh	ICU	Interrupt Source Priority Register 063	IPR063	8	8	2 ICLK
0008 7340h	ICU	Interrupt Source Priority Register 064	IPR064	8	8	2 ICLK
0008 7341h	ICU	Interrupt Source Priority Register 065	IPR065	8	8	2 ICLK
0008 7342h	ICU	Interrupt Source Priority Register 066	IPR066	8	8	2 ICLK
0008 7343h	ICU	Interrupt Source Priority Register 067	IPR067	8	8	2 ICLK
0008 7344h	ICU	Interrupt Source Priority Register 068	IPR068	8	8	2 ICLK
0008 7345h	ICU	Interrupt Source Priority Register 069	IPR069	8	8	2 ICLK
0008 7346h	ICU	Interrupt Source Priority Register 070	IPR070	8	8	2 ICLK
0008 7347h	ICU	Interrupt Source Priority Register 071	IPR071	8	8	2 ICLK
0008 7358h	ICU	Interrupt Source Priority Register 088	IPR088	8	8	2 ICLK
0008 7359h	ICU	Interrupt Source Priority Register 089	IPR089	8	8	2 ICLK
0008 7362h	ICU	Interrupt Source Priority Register 098	IPR098	8	8	2 ICLK
0008 7363h	ICU	Interrupt Source Priority Register 099	IPR099	8	8	2 ICLK
0008 7364h	ICU	Interrupt Source Priority Register 100	IPR100	8	8	2 ICLK
0008 7365h	ICU	Interrupt Source Priority Register 101	IPR101	8	8	2 ICLK
0008 7366h	ICU	Interrupt Source Priority Register 102	IPR102	8	8	2 ICLK
0008 7367h	ICU	Interrupt Source Priority Register 103	IPR103	8	8	2 ICLK
0008 7368h	ICU	Interrupt Source Priority Register 104	IPR104	8	8	2 ICLK
0008 7369h	ICU	Interrupt Source Priority Register 105	IPR105	8	8	2 ICLK
0008 736Ah	ICU	Interrupt Source Priority Register 106	IPR106	8	8	2 ICLK
0008 736Bh	ICU	Interrupt Source Priority Register 107	IPR107	8	8	2 ICLK
0008 736Ch	ICU	Interrupt Source Priority Register 108	IPR108	8	8	2 ICLK
0008 736Dh	ICU	Interrupt Source Priority Register 109	IPR109	8	8	2 ICLK
0008 736Eh	ICU	Interrupt Source Priority Register 110	IPR110	8	8	2 ICLK
0008 736Fh	ICU	Interrupt Source Priority Register 111	IPR111	8	8	2 ICLK
0008 7370h	ICU	Interrupt Source Priority Register 112	IPR112	8	8	2 ICLK
0008 7371h	ICU	Interrupt Source Priority Register 113	IPR113	8	8	2 ICLK
0008 7372h	ICU	Interrupt Source Priority Register 114	IPR114	8	8	2 ICLK
0008 7376h	ICU	Interrupt Source Priority Register 118	IPR118	8	8	2 ICLK
0008 7379h	ICU	Interrupt Source Priority Register 121	IPR121	8	8	2 ICLK
0008 737Bh	ICU	Interrupt Source Priority Register 123	IPR123	8	8	2 ICLK
0008 737Dh	ICU	Interrupt Source Priority Register 125	IPR125	8	8	2 ICLK
0008 737Fh	ICU	Interrupt Source Priority Register 127	IPR127	8	8	2 ICLK
0008 7381h	ICU	Interrupt Source Priority Register 129	IPR129	8	8	2 ICLK

Table 4.1 List of I/O Registers (Address Order) (10/40)

Address	Module Symbol	Register Name	Register Symbol	Number of Bits	Access Size	Number of Access Cycles ICLK ≥ PCLK
0008 7385h	ICU	Interrupt Source Priority Register 133	IPR133	8	8	2 ICLK
0008 7386h	ICU	Interrupt Source Priority Register 134	IPR134	8	8	2 ICLK
0008 738Ah	ICU	Interrupt Source Priority Register 138	IPR138	8	8	2 ICLK
0008 738Bh	ICU	Interrupt Source Priority Register 139	IPR139	8	8	2 ICLK
0008 738Eh	ICU	Interrupt Source Priority Register 142	IPR142	8	8	2 ICLK
0008 7392h	ICU	Interrupt Source Priority Register 146	IPR146	8	8	2 ICLK
0008 7395h	ICU	Interrupt Source Priority Register 149	IPR149	8	8	2 ICLK
0008 7397h	ICU	Interrupt Source Priority Register 151	IPR151	8	8	2 ICLK
0008 7399h	ICU	Interrupt Source Priority Register 153	IPR153	8	8	2 ICLK
0008 739Fh	ICU	Interrupt Source Priority Register 159	IPR159	8	8	2 ICLK
0008 73A3h	ICU	Interrupt Source Priority Register 163	IPR163	8	8	2 ICLK
0008 73A8h	ICU	Interrupt Source Priority Register 168	IPR168	8	8	2 ICLK
0008 73ADh	ICU	Interrupt Source Priority Register 173	IPR173	8	8	2 ICLK
0008 73AEh	ICU	Interrupt Source Priority Register 174	IPR174	8	8	2 ICLK
0008 73B1h	ICU	Interrupt Source Priority Register 177	IPR177	8	8	2 ICLK
0008 73B4h	ICU	Interrupt Source Priority Register 180	IPR180	8	8	2 ICLK
0008 73B7h	ICU	Interrupt Source Priority Register 183	IPR183	8	8	2 ICLK
0008 73BAh	ICU	Interrupt Source Priority Register 186	IPR186	8	8	2 ICLK
0008 73BDh	ICU	Interrupt Source Priority Register 189	IPR189	8	8	2 ICLK
0008 73C0h	ICU	Interrupt Source Priority Register 192	IPR192	8	8	2 ICLK
0008 73C3h	ICU	Interrupt Source Priority Register 195	IPR195	8	8	2 ICLK
0008 73CAh	ICU	Interrupt Source Priority Register 202	IPR202	8	8	2 ICLK
0008 73CBh	ICU	Interrupt Source Priority Register 203	IPR203	8	8	2 ICLK
0008 73CCh	ICU	Interrupt Source Priority Register 204	IPR204	8	8	2 ICLK
0008 73CDh	ICU	Interrupt Source Priority Register 205	IPR205	8	8	2 ICLK
0008 73CEh	ICU	Interrupt Source Priority Register 206	IPR206	8	8	2 ICLK
0008 73CFh	ICU	Interrupt Source Priority Register 207	IPR207	8	8	2 ICLK
0008 73D0h	ICU	Interrupt Source Priority Register 208	IPR208	8	8	2 ICLK
0008 73D1h	ICU	Interrupt Source Priority Register 209	IPR209	8	8	2 ICLK
0008 73D2h	ICU	Interrupt Source Priority Register 210	IPR210	8	8	2 ICLK
0008 73D3h	ICU	Interrupt Source Priority Register 211	IPR211	8	8	2 ICLK
0008 73D4h	ICU	Interrupt Source Priority Register 212	IPR212	8	8	2 ICLK
0008 73D5h	ICU	Interrupt Source Priority Register 213	IPR213	8	8	2 ICLK
0008 73D6h	ICU	Interrupt Source Priority Register 214	IPR214	8	8	2 ICLK
0008 73D7h	ICU	Interrupt Source Priority Register 215	IPR215	8	8	2 ICLK
0008 73D8h	ICU	Interrupt Source Priority Register 216	IPR216	8	8	2 ICLK
0008 73D9h	ICU	Interrupt Source Priority Register 217	IPR217	8	8	2 ICLK
0008 73DAh	ICU	Interrupt Source Priority Register 218	IPR218	8	8	2 ICLK
0008 73DEh	ICU	Interrupt Source Priority Register 222	IPR222	8	8	2 ICLK
0008 73E2h	ICU	Interrupt Source Priority Register 226	IPR226	8	8	2 ICLK
0008 73E6h	ICU	Interrupt Source Priority Register 230	IPR230	8	8	2 ICLK
0008 73EAh	ICU	Interrupt Source Priority Register 234	IPR234	8	8	2 ICLK
0008 73EEh	ICU	Interrupt Source Priority Register 238	IPR238	8	8	2 ICLK
0008 73EFh	ICU	Interrupt Source Priority Register 239	IPR239	8	8	2 ICLK
0008 73F0h	ICU	Interrupt Source Priority Register 240	IPR240	8	8	2 ICLK
0008 73F1h	ICU	Interrupt Source Priority Register 241	IPR241	8	8	2 ICLK
0008 73F2h	ICU	Interrupt Source Priority Register 242	IPR242	8	8	2 ICLK
0008 73F3h	ICU	Interrupt Source Priority Register 243	IPR243	8	8	2 ICLK
0008 73F4h	ICU	Interrupt Source Priority Register 244	IPR244	8	8	2 ICLK
0008 73F6h	ICU	Interrupt Source Priority Register 246	IPR246	8	8	2 ICLK
0008 73F7h	ICU	Interrupt Source Priority Register 247	IPR247	8	8	2 ICLK
0008 73F8h	ICU	Interrupt Source Priority Register 248	IPR248	8	8	2 ICLK

Table 4.1 List of I/O Registers (Address Order) (11/40)

Address	Module Symbol	Register Name	Register Symbol	Number of Bits	Access Size	Number of Access Cycles ICLK ≥ PCLK
0008 73F9h	ICU	Interrupt Source Priority Register 249	IPR249	8	8	2 ICLK
0008 73FAh	ICU	Interrupt Source Priority Register 250	IPR250	8	8	2 ICLK
0008 7500h	ICU	IRQ Control Register 0	IRQCR0	8	8	2 ICLK
0008 7501h	ICU	IRQ Control Register 1	IRQCR1	8	8	2 ICLK
0008 7502h	ICU	IRQ Control Register 2	IRQCR2	8	8	2 ICLK
0008 7503h	ICU	IRQ Control Register 3	IRQCR3	8	8	2 ICLK
0008 7504h	ICU	IRQ Control Register 4	IRQCR4	8	8	2 ICLK
0008 7505h	ICU	IRQ Control Register 5	IRQCR5	8	8	2 ICLK
0008 7506h	ICU	IRQ Control Register 6	IRQCR6	8	8	2 ICLK
0008 7507h	ICU	IRQ Control Register 7	IRQCR7	8	8	2 ICLK
0008 7510h	ICU	IRQ Pin Digital Filter Enable Register 0	IRQFLTE0	8	8	2 ICLK
0008 7514h	ICU	IRQ Pin Digital Filter Setting Register 0	IRQFLTC0	16	16	2 ICLK
0008 7580h	ICU	Non-Maskable Interrupt Status Register	NMISR	8	8	2 ICLK
0008 7581h	ICU	Non-Maskable Interrupt Enable Register	NMIER	8	8	2 ICLK
0008 7582h	ICU	Non-Maskable Interrupt Status Clear Register	NMICLR	8	8	2 ICLK
0008 7583h	ICU	NMI Pin Interrupt Control Register	NMICR	8	8	2 ICLK
0008 7590h	ICU	NMI Pin Digital Filter Enable Register	NMIFLTE	8	8	2 ICLK
0008 7594h	ICU	NMI Pin Digital Filter Setting Register	NMIFLTC	8	8	2 ICLK
0008 8000h	CMT	Compare Match Timer Start Register 0	CMSTR0	16	16	2 or 3 PCLKB
0008 8002h	CMT0	Compare Match Timer Control Register	CMCR	16	16	2 or 3 PCLKB
0008 8004h	CMT0	Compare Match Counter	CMCNT	16	16	2 or 3 PCLKB
0008 8006h	CMT0	Compare Match Constant Register	CMCOR	16	16	2 or 3 PCLKB
0008 8008h	CMT1	Compare Match Timer Control Register	CMCR	16	16	2 or 3 PCLKB
0008 800Ah	CMT1	Compare Match Counter	CMCNT	16	16	2 or 3 PCLKB
0008 800Ch	CMT1	Compare Match Constant Register	CMCOR	16	16	2 or 3 PCLKB
0008 8010h	CMT	Compare Match Timer Start Register 1	CMSTR1	16	16	2 or 3 PCLKB
0008 8012h	CMT2	Compare Match Timer Control Register	CMCR	16	16	2 or 3 PCLKB
0008 8014h	CMT2	Compare Match Counter	CMCNT	16	16	2 or 3 PCLKB
0008 8016h	CMT2	Compare Match Constant Register	CMCOR	16	16	2 or 3 PCLKB
0008 8018h	CMT3	Compare Match Timer Control Register	CMCR	16	16	2 or 3 PCLKB
0008 801Ah	CMT3	Compare Match Counter	CMCNT	16	16	2 or 3 PCLKB
0008 801Ch	CMT3	Compare Match Constant Register	CMCOR	16	16	2 or 3 PCLKB
0008 8030h	IWDT	IWDT Refresh Register	IWDTRR	8	8	2 or 3 PCLKB
0008 8032h	IWDT	IWDT Control Register	IWDTCR	16	16	2 or 3 PCLKB
0008 8034h	IWDT	IWDT Status Register	IWDTSR	16	16	2 or 3 PCLKB
0008 8036h	IWDT	IWDT Reset Control Register	IWDTRCR	8	8	2 or 3 PCLKB
0008 8038h	IWDT	IWDT Count Stop Control Register	IWDTCSTPR	8	8	2 or 3 PCLKB
0008 80C0h	DA	D/A Data Register 0	DADR0	16	16	2 or 3 PCLKB
0008 80C2h	DA	D/A Data Register 1	DADR1	16	16	2 or 3 PCLKB
0008 80C4h	DA	D/A Control Register	DACR	8	8	2 or 3 PCLKB
0008 80C5h	DA	DADRm Format Select Register	DADPR	8	8	2 or 3 PCLKB
0008 80C6h	DA	D/A A/D Synchronous Start Control Register	DAADSCR	8	8	2 or 3 PCLKB
0008 8200h	TMR0	Timer Control Register	TCR	8	8	2 or 3 PCLKB
0008 8201h	TMR1	Timer Control Register	TCR	8	8	2 or 3 PCLKB
0008 8202h	TMR0	Timer Control/Status Register	TCSR	8	8	2 or 3 PCLKB
0008 8203h	TMR1	Timer Control/Status Register	TCSR	8	8	2 or 3 PCLKB
0008 8204h	TMR0	Time Constant Register A	TCORA	8	8	2 or 3 PCLKB
0008 8205h	TMR1	Time Constant Register A	TCORA	8	8*1	2 or 3 PCLKB
0008 8206h	TMR0	Time Constant Register B	TCORB	8	8	2 or 3 PCLKB
0008 8207h	TMR1	Time Constant Register B	TCORB	8	8*1	2 or 3 PCLKB
0008 8208h	TMR0	Timer Counter	TCNT	8	8	2 or 3 PCLKB
0008 8209h	TMR1	Timer Counter	TCNT	8	8*1	2 or 3 PCLKB

Table 4.1 List of I/O Registers (Address Order) (12/40)

Address	Module Symbol	Register Name	Register Symbol	Number of Bits	Access Size	Number of Access Cycles ICLK ≥ PCLK
0008 820Ah	TMR0	Timer Counter Control Register	TCCR	8	8	2 or 3 PCLKB
0008 820Bh	TMR1	Timer Counter Control Register	TCCR	8	8*1	2 or 3 PCLKB
0008 8210h	TMR2	Timer Control Register	TCR	8	8	2 or 3 PCLKB
0008 8211h	TMR3	Timer Control Register	TCR	8	8	2 or 3 PCLKB
0008 8212h	TMR2	Timer Control/Status Register	TCSR	8	8	2 or 3 PCLKB
0008 8213h	TMR3	Timer Control/Status Register	TCSR	8	8	2 or 3 PCLKB
0008 8214h	TMR2	Time Constant Register A	TCORA	8	8	2 or 3 PCLKB
0008 8215h	TMR3	Time Constant Register A	TCORA	8	8*1	2 or 3 PCLKB
0008 8216h	TMR2	Time Constant Register B	TCORB	8	8	2 or 3 PCLKB
0008 8217h	TMR3	Time Constant Register B	TCORB	8	8*1	2 or 3 PCLKB
0008 8218h	TMR2	Timer Counter	TCNT	8	8	2 or 3 PCLKB
0008 8219h	TMR3	Timer Counter	TCNT	8	8*1	2 or 3 PCLKB
0008 821Ah	TMR2	Timer Counter Control Register	TCCR	8	8	2 or 3 PCLKB
0008 821Bh	TMR3	Timer Counter Control Register	TCCR	8	8*1	2 or 3 PCLKB
0008 8220h	TMR4	Timer Control Register	TCR	8	8	2 or 3 PCLKB
0008 8221h	TMR5	Timer Control Register	TCR	8	8	2 or 3 PCLKB
0008 8222h	TMR4	Timer Control / Status Register	TCSR	8	8	2 or 3 PCLKB
0008 8223h	TMR5	Timer Control / Status Register	TCSR	8	8	2 or 3 PCLKB
0008 8224h	TMR4	Time Constant Register A	TCORA	8	8	2 or 3 PCLKB
0008 8225h	TMR5	Time Constant Register A	TCORA	8	8*1	2 or 3 PCLKB
0008 8226h	TMR4	Time Constant Register B	TCORB	8	8	2 or 3 PCLKB
0008 8227h	TMR5	Time Constant Register B	TCORB	8	8*1	2 or 3 PCLKB
0008 8228h	TMR4	Timer Counter	TCNT	8	8	2 or 3 PCLKB
0008 8229h	TMR5	Timer Counter	TCNT	8	8*1	2 or 3 PCLKB
0008 822Ah	TMR4	Timer Counter Control Register	TCCR	8	8	2 or 3 PCLKB
0008 822Bh	TMR5	Timer Counter Control Register	TCCR	8	8*1	2 or 3 PCLKB
0008 8230h	TMR6	Timer Control Register	TCR	8	8	2 or 3 PCLKB
0008 8231h	TMR7	Timer Control Register	TCR	8	8	2 or 3 PCLKB
0008 8232h	TMR6	Timer Control / Status Register	TCSR	8	8	2 or 3 PCLKB
0008 8233h	TMR7	Timer Control / Status Register	TCSR	8	8	2 or 3 PCLKB
0008 8234h	TMR6	Time Constant Register A	TCORA	8	8	2 or 3 PCLKB
0008 8235h	TMR7	Time Constant Register A	TCORA	8	8*1	2 or 3 PCLKB
0008 8236h	TMR6	Time Constant Register B	TCORB	8	8	2 or 3 PCLKB
0008 8237h	TMR7	Time Constant Register B	TCORB	8	8*1	2 or 3 PCLKB
0008 8238h	TMR6	Timer Counter	TCNT	8	8	2 or 3 PCLKB
0008 8239h	TMR7	Timer Counter	TCNT	8	8*1	2 or 3 PCLKB
0008 823Ah	TMR6	Timer Counter Control Register	TCCR	8	8	2 or 3 PCLKB
0008 823Bh	TMR7	Timer Counter Control Register	TCCR	8	8*1	2 or 3 PCLKB
0008 8280h	CRC	CRC Control Register	CRCCR	8	8	2 or 3 PCLKB
0008 8281h	CRC	CRC Data Input Register	CRCDIR	8	8	2 or 3 PCLKB
0008 8282h	CRC	CRC Data Output Register	CRCDOR	16	16	2 or 3 PCLKB
0008 8300h	RIIC0	I^2C-bus Control Register 1	ICCR1	8	8	2 or 3 PCLKB
0008 8301h	RIIC0	I^2C-bus Control Register 2	ICCR2	8	8	2 or 3 PCLKB
0008 8302h	RIIC0	I^2C-bus Mode Register 1	ICMR1	8	8	2 or 3 PCLKB
0008 8303h	RIIC0	I^2C-bus Mode Register 2	ICMR2	8	8	2 or 3 PCLKB
0008 8304h	RIIC0	I^2C-bus Mode Register 3	ICMR3	8	8	2 or 3 PCLKB
0008 8305h	RIIC0	I^2C-bus Function Enable Register	ICFER	8	8	2 or 3 PCLKB
0008 8306h	RIIC0	I^2C-bus Status Enable Register	ICSER	8	8	2 or 3 PCLKB
0008 8307h	RIIC0	I^2C-bus Interrupt Enable Register	ICIER	8	8	2 or 3 PCLKB
0008 8308h	RIIC0	I^2C-bus Status Register 1	ICSR1	8	8	2 or 3 PCLKB
0008 8309h	RIIC0	I^2C-bus Status Register 2	ICSR2	8	8	2 or 3 PCLKB
0008 830Ah	RIIC0	Slave Address Register L0	SARL0	8	8	2 or 3 PCLKB

Table 4.1 List of I/O Registers (Address Order) (13/40)

Address	Module Symbol	Register Name	Register Symbol	Number of Bits	Access Size	Number of Access Cycles ICLK ≥ PCLK
0008 830Bh	RIIC0	Slave Address Register U0	SARU0	8	8	2 or 3 PCLKB
0008 830Ch	RIIC0	Slave Address Register L1	SARL1	8	8	2 or 3 PCLKB
0008 830Dh	RIIC0	Slave Address Register U1	SARU1	8	8	2 or 3 PCLKB
0008 830Eh	RIIC0	Slave Address Register L2	SARL2	8	8	2 or 3 PCLKB
0008 830Fh	RIIC0	Slave Address Register U2	SARU2	8	8	2 or 3 PCLKB
0008 8310h	RIIC0	I^2C-bus Bit Rate Low-Level Register	ICBRL	8	8	2 or 3 PCLKB
0008 8311h	RIIC0	I^2C-bus Bit Rate High-Level Register	ICBRH	8	8	2 or 3 PCLKB
0008 8312h	RIIC0	I^2C-bus Transmit Data Register	ICDRT	8	8	2 or 3 PCLKB
0008 8313h	RIIC0	I^2C-bus Receive Data Register	ICDRR	8	8	2 or 3 PCLKB
0008 8380h	RSPI0	RSPI Control Register	SPCR	8	8	2 or 3 PCLKB
0008 8381h	RSPI0	RSPI Slave Select Polarity Register	SSLP	8	8	2 or 3 PCLKB
0008 8382h	RSPI0	RSPI Pin Control Register	SPPCR	8	8	2 or 3 PCLKB
0008 8383h	RSPI0	RSPI Status Register	SPSR	8	8	2 or 3 PCLKB
0008 8384h	RSPI0	RSPI Data Register	SPDR	32	16, 32	2 or 3 PCLKB
0008 8388h	RSPI0	RSPI Sequence Control Register	SPSCR	8	8	2 or 3 PCLKB
0008 8389h	RSPI0	RSPI Sequence Status Register	SPSSR	8	8	2 or 3 PCLKB
0008 838Ah	RSPI0	RSPI Bit Rate Register	SPBR	8	8	2 or 3 PCLKB
0008 838Bh	RSPI0	RSPI Data Control Register	SPDCR	8	8	2 or 3 PCLKB
0008 838Ch	RSPI0	RSPI Clock Delay Register	SPCKD	8	8	2 or 3 PCLKB
0008 838Dh	RSPI0	RSPI Slave Select Negation Delay Register	SSLND	8	8	2 or 3 PCLKB
0008 838Eh	RSPI0	RSPI Next-Access Delay Register	SPND	8	8	2 or 3 PCLKB
0008 838Fh	RSPI0	RSPI Control Register 2	SPCR2	8	8	2 or 3 PCLKB
0008 8390h	RSPI0	RSPI Command Register 0	SPCMD0	16	16	2 or 3 PCLKB
0008 8392h	RSPI0	RSPI Command Register 1	SPCMD1	16	16	2 or 3 PCLKB
0008 8394h	RSPI0	RSPI Command Register 2	SPCMD2	16	16	2 or 3 PCLKB
0008 8396h	RSPI0	RSPI Command Register 3	SPCMD3	16	16	2 or 3 PCLKB
0008 8398h	RSPI0	RSPI Command Register 4	SPCMD4	16	16	2 or 3 PCLKB
0008 839Ah	RSPI0	RSPI Command Register 5	SPCMD5	16	16	2 or 3 PCLKB
0008 839Ch	RSPI0	RSPI Command Register 6	SPCMD6	16	16	2 or 3 PCLKB
0008 839Eh	RSPI0	RSPI Command Register 7	SPCMD7	16	16	2 or 3 PCLKB
0008 9000h	S12AD	A/D Control Register	ADCSR	16	16	2 or 3 PCLKB
0008 9004h	S12AD	A/D Channel Select Register A0	ADANSA0	16	16	2 or 3 PCLKB
0008 9006h	S12AD	A/D Channel Select Register A1	ADANSA1	16	16	2 or 3 PCLKB
0008 9008h	S12AD	A/D-Converted Value Addition/Average Function Channel Select Register 0	ADADS0	16	16	2 or 3 PCLKB
0008 900Ah	S12AD	A/D-Converted Value Addition/Average Function Channel Select Register 1	ADADS1	16	16	2 or 3 PCLKB
0008 900Ch	S12AD	A/D-Converted Value Addition/Average Count Select Register	ADADC	8	8	2 or 3 PCLKB
0008 900Eh	S12AD	A/D Control Extended Register	ADCER	16	16	2 or 3 PCLKB
0008 9010h	S12AD	A/D Conversion Start Trigger Select Register	ADSTRGR	16	16	2 or 3 PCLKB
0008 9014h	S12AD	A/D Channel Select Register B0	ADANSB0	16	16	2 or 3 PCLKB
0008 9016h	S12AD	A/D Channel Select Register B1	ADANSB1	16	16	2 or 3 PCLKB
0008 9018h	S12AD	A/D Data Duplication Register	ADDBLDR	16	16	2 or 3 PCLKB
0008 901Eh	S12AD	A/D Self-Diagnosis Data Register	ADRD	16	16	2 or 3 PCLKB
0008 9020h	S12AD	A/D Data Register 0	ADDR0	16	16	2 or 3 PCLKB
0008 9022h	S12AD	A/D Data Register 1	ADDR1	16	16	2 or 3 PCLKB
0008 9024h	S12AD	A/D Data Register 2	ADDR2	16	16	2 or 3 PCLKB
0008 9026h	S12AD	A/D Data Register 3	ADDR3	16	16	2 or 3 PCLKB
0008 9040h	S12AD	A/D Data Register 16	ADDR16	16	16	2 or 3 PCLKB
0008 907Ah	S12AD	A/D Disconnection Detection Control Register	ADDISCR	8	8	2 or 3 PCLKB
0008 9080h	S12AD	A/D Group Scan Priority Control Register	ADGSPCR	16	16	2 or 3 PCLKB
0008 9084h	S12AD	A/D Data Duplication Register A	ADDBLDRA	16	16	2 or 3 PCLKB

Table 4.1 List of I/O Registers (Address Order) (14/40)

Address	Module Symbol	Register Name	Register Symbol	Number of Bits	Access Size	Number of Access Cycles ICLK ≥ PCLK
0008 9086h	S12AD	A/D Data Duplication Register B	ADDBLDRB	16	16	2 or 3 PCLKB
0008 90D4h	S12AD	A/D Channel Select Register C0	ADANSC0	16	16	2 or 3 PCLKB
0008 90D6h	S12AD	A/D Channel Select Register C1	ADANSC1	16	16	2 or 3 PCLKB
0008 90D9h	S12AD	A/D Group C Trigger Select Register	ADGCTRGR	8	8	2 or 3 PCLKB
0008 90DDh	S12AD	A/D Sampling State Register L	ADSSTRL	8	8	2 or 3 PCLKB
0008 90E0h	S12AD	A/D Sampling State Register 0	ADSSTR0	8	8	2 or 3 PCLKB
0008 90E1h	S12AD	A/D Sampling State Register 1	ADSSTR1	8	8	2 or 3 PCLKB
0008 90E2h	S12AD	A/D Sampling State Register 2	ADSSTR2	8	8	2 or 3 PCLKB
0008 90E3h	S12AD	A/D Sampling State Register 3	ADSSTR3	8	8	2 or 3 PCLKB
0008 91A0h	S12AD	A/D Programmable Gain Amplifier Control Register	ADPGACR	16	16	2 or 3 PCLKB
0008 91A2h	S12AD	A/D Programmable Gain Amplifier Gain Setting Register 0	ADPGAGS0	16	16	2 or 3 PCLKB
0008 9200h	S12AD1	A/D Control Register	ADCSR	16	16	2 or 3 PCLKB
0008 9204h	S12AD1	A/D Channel Select Register A0	ADANSA0	16	16	2 or 3 PCLKB
0008 9206h	S12AD1	A/D Channel Select Register A1	ADANSA1	16	16	2 or 3 PCLKB
0008 9208h	S12AD1	A/D-Converted Value Addition/Average Function Channel Select Register 0	ADADS0	16	16	2 or 3 PCLKB
0008 920Ah	S12AD1	A/D-Converted Value Addition/Average Function Channel Select Register 1	ADADS1	16	16	2 or 3 PCLKB
0008 920Ch	S12AD1	A/D-Converted Value Addition/Average Count Select Register	ADADC	8	8	2 or 3 PCLKB
0008 920Eh	S12AD1	A/D Control Extended Register	ADCER	16	16	2 or 3 PCLKB
0008 9210h	S12AD1	A/D Conversion Start Trigger Select Register	ADSTRGR	16	16	2 or 3 PCLKB
0008 9214h	S12AD1	A/D Channel Select Register B0	ADANSB0	16	16	2 or 3 PCLKB
0008 9216h	S12AD1	A/D Channel Select Register B1	ADANSB1	16	16	2 or 3 PCLKB
0008 9218h	S12AD1	A/D Data Duplication Register	ADDBLDR	16	16	2 or 3 PCLKB
0008 921Eh	S12AD1	A/D Self-Diagnosis Data Register	ADRD	16	16	2 or 3 PCLKB
0008 9220h	S12AD1	A/D Data Register 0	ADDR0	16	16	2 or 3 PCLKB
0008 9222h	S12AD1	A/D Data Register 1	ADDR1	16	16	2 or 3 PCLKB
0008 9224h	S12AD1	A/D Data Register 2	ADDR2	16	16	2 or 3 PCLKB
0008 9226h	S12AD1	A/D Data Register 3	ADDR3	16	16	2 or 3 PCLKB
0008 9240h	S12AD1	A/D Data Register 16	ADDR16	16	16	2 or 3 PCLKB
0008 9266h	S12AD1	A/D Sample-and-hold Circuit Control Register	ADSHCR	16	16	2 or 3 PCLKB
0008 927Ah	S12AD1	A/D Disconnection Detection Control Register	ADDISCR	8	8	2 or 3 PCLKB
0008 9280h	S12AD1	A/D Group Scan Priority Control Register	ADGSPCR	16	16	2 or 3 PCLKB
0008 9284h	S12AD1	A/D Data Duplication Register A	ADDBLDRA	16	16	2 or 3 PCLKB
0008 9286h	S12AD1	A/D Data Duplication Register B	ADDBLDRB	16	16	2 or 3 PCLKB
0008 92D4h	S12AD1	A/D Channel Select Register C0	ADANSC0	16	16	2 or 3 PCLKB
0008 92D6h	S12AD1	A/D Channel Select Register C1	ADANSC1	16	16	2 or 3 PCLKB
0008 92D9h	S12AD1	A/D Group C Trigger Select Register	ADGCTRGR	8	8	2 or 3 PCLKB
0008 92DDh	S12AD1	A/D Sampling State Register L	ADSSTRL	8	8	2 or 3 PCLKB
0008 92E0h	S12AD1	A/D Sampling State Register 0	ADSSTR0	8	8	2 or 3 PCLKB
0008 92E1h	S12AD1	A/D Sampling State Register 1	ADSSTR1	8	8	2 or 3 PCLKB
0008 92E2h	S12AD1	A/D Sampling State Register 2	ADSSTR2	8	8	2 or 3 PCLKB
0008 92E3h	S12AD1	A/D Sampling State Register 3	ADSSTR3	8	8	2 or 3 PCLKB
0008 93A0h	S12AD1	A/D Programmable Gain Amplifier Control Register	ADPGACR	16	16	2 or 3 PCLKB
0008 93A2h	S12AD1	A/D Programmable Gain Amplifier Gain Setting Register 0	ADPGAGS0	16	16	2 or 3 PCLKB
0008 9400h	S12AD2	A/D Control Register	ADCSR	16	16	2 or 3 PCLKB
0008 9404h	S12AD2	A/D Channel Select Register A0	ADANSA0	16	16	2 or 3 PCLKB
0008 9408h	S12AD2	A/D-Converted Value Addition/Average Function Channel Select Register 0	ADADS0	16	16	2 or 3 PCLKB
0008 940Ch	S12AD2	A/D-Converted Value Addition/Average Count Select Register	ADADC	8	8	2 or 3 PCLKB
0008 940Eh	S12AD2	A/D Control Extended Register	ADCER	16	16	2 or 3 PCLKB
0008 9410h	S12AD2	A/D Conversion Start Trigger Select Register	ADSTRGR	16	16	2 or 3 PCLKB

Table 4.1 List of I/O Registers (Address Order) (15/40)

Address	Module Symbol	Register Name	Register Symbol	Number of Bits	Access Size	Number of Access Cycles ICLK ≥ PCLK
0008 9412h	S12AD2	A/D Conversion Extended Input Control Register	ADEXICR	16	16	2 or 3 PCLKB
0008 9414h	S12AD2	A/D Channel Select Register B0	ADANSB0	16	16	2 or 3 PCLKB
0008 9418h	S12AD2	A/D Data Duplication Register	ADDBLDR	16	16	2 or 3 PCLKB
0008 941Ch	S12AD2	A/D Internal Reference Voltage Data Register	ADOCDR	16	16	2 or 3 PCLKB
0008 941Eh	S12AD2	A/D Self-Diagnosis Data Register	ADRD	16	16	2 or 3 PCLKB
0008 9420h	S12AD2	A/D Data Register 0	ADDR0	16	16	2 or 3 PCLKB
0008 9422h	S12AD2	A/D Data Register 1	ADDR1	16	16	2 or 3 PCLKB
0008 9424h	S12AD2	A/D Data Register 2	ADDR2	16	16	2 or 3 PCLKB
0008 9426h	S12AD2	A/D Data Register 3	ADDR3	16	16	2 or 3 PCLKB
0008 9428h	S12AD2	A/D Data Register 4	ADDR4	16	16	2 or 3 PCLKB
0008 942Ah	S12AD2	A/D Data Register 5	ADDR5	16	16	2 or 3 PCLKB
0008 942Ch	S12AD2	A/D Data Register 6	ADDR6	16	16	2 or 3 PCLKB
0008 942Eh	S12AD2	A/D Data Register 7	ADDR7	16	16	2 or 3 PCLKB
0008 9430h	S12AD2	A/D Data Register 8	ADDR8	16	16	2 or 3 PCLKB
0008 9432h	S12AD2	A/D Data Register 9	ADDR9	16	16	2 or 3 PCLKB
0008 9434h	S12AD2	A/D Data Register 10	ADDR10	16	16	2 or 3 PCLKB
0008 9436h	S12AD2	A/D Data Register 11	ADDR11	16	16	2 or 3 PCLKB
0008 947Ah	S12AD2	A/D Disconnection Detection Control Register	ADDISCR	8	8	2 or 3 PCLKB
0008 9480h	S12AD2	A/D Group Scan Priority Control Register	ADGSPCR	16	16	2 or 3 PCLKB
0008 9484h	S12AD2	A/D Data Duplication Register A	ADDBLDRA	16	16	2 or 3 PCLKB
0008 9486h	S12AD2	A/D Data Duplication Register B	ADDBLDRB	16	16	2 or 3 PCLKB
0008 94D4h	S12AD2	A/D Channel Select Register C0	ADANSC0	16	16	2 or 3 PCLKB
0008 94D9h	S12AD2	A/D Group C Trigger Select Register	ADGCTRGR	8	8	2 or 3 PCLKB
0008 94DFh	S12AD2	A/D Sampling State Register O	ADSSTRO	8	8	2 or 3 PCLKB
0008 94E0h	S12AD2	A/D Sampling State Register 0	ADSSTR0	8	8	2 or 3 PCLKB
0008 94E1h	S12AD2	A/D Sampling State Register 1	ADSSTR1	8	8	2 or 3 PCLKB
0008 94E2h	S12AD2	A/D Sampling State Register 2	ADSSTR2	8	8	2 or 3 PCLKB
0008 94E3h	S12AD2	A/D Sampling State Register 3	ADSSTR3	8	8	2 or 3 PCLKB
0008 94E4h	S12AD2	A/D Sampling State Register 4	ADSSTR4	8	8	2 or 3 PCLKB
0008 94E5h	S12AD2	A/D Sampling State Register 5	ADSSTR5	8	8	2 or 3 PCLKB
0008 94E6h	S12AD2	A/D Sampling State Register 6	ADSSTR6	8	8	2 or 3 PCLKB
0008 94E7h	S12AD2	A/D Sampling State Register 7	ADSSTR7	8	8	2 or 3 PCLKB
0008 94E8h	S12AD2	A/D Sampling State Register 8	ADSSTR8	8	8	2 or 3 PCLKB
0008 94E9h	S12AD2	A/D Sampling State Register 9	ADSSTR9	8	8	2 or 3 PCLKB
0008 94EAh	S12AD2	A/D Sampling State Register 10	ADSSTR10	8	8	2 or 3 PCLKB
0008 94EBh	S12AD2	A/D Sampling State Register 11	ADSSTR11	8	8	2 or 3 PCLKB
0008 A020h	SCI1	Serial Mode Register	SMR	8	8	2 or 3 PCLKB
0008 A021h	SCI1	Bit Rate Register	BRR	8	8	2 or 3 PCLKB
0008 A022h	SCI1	Serial Control Register	SCR	8	8	2 or 3 PCLKB
0008 A023h	SCI1	Transmit Data Register	TDR	8	8	2 or 3 PCLKB
0008 A024h	SCI1	Serial Status Register	SSR	8	8	2 or 3 PCLKB
0008 A025h	SCI1	Receive Data Register	RDR	8	8	2 or 3 PCLKB
0008 A026h	SMCI1	Smart Card Mode Register	SCMR	8	8	2 or 3 PCLKB
0008 A027h	SCI1	Serial Extended Mode Register	SEMR	8	8	2 or 3 PCLKB
0008 A028h	SCI1	Noise Filter Setting Register	SNFR	8	8	2 or 3 PCLKB
0008 A029h	SCI1	I^2C Mode Register 1	SIMR1	8	8	2 or 3 PCLKB
0008 A02Ah	SCI1	I^2C Mode Register 2	SIMR2	8	8	2 or 3 PCLKB
0008 A02Bh	SCI1	I^2C Mode Register 3	SIMR3	8	8	2 or 3 PCLKB
0008 A02Ch	SCI1	I^2C Status Register	SISR	8	8	2 or 3 PCLKB
0008 A02Dh	SCI1	SPI Mode Register	SPMR	8	8	2 or 3 PCLKB
0008 A02Eh	SCI1	Transmit Data Register HL	TDRHL	16	16	4 or 5 PCLKB
0008 A02Eh	SCI1	Transmit Data Register H	TDRH	8	8	2 or 3 PCLKB

Table 4.1 List of I/O Registers (Address Order) (16/40)

Address	Module Symbol	Register Name	Register Symbol	Number of Bits	Access Size	Number of Access Cycles ICLK ≥ PCLK
0008 A02Fh	SCI1	Transmit Data Register L	TDRL	8	8	2 or 3 PCLKB
0008 A030h	SCI1	Receive Data Register HL	RDRHL	16	16	4 or 5 PCLKB
0008 A030h	SCI1	Receive Data Register H	RDRH	8	8	2 or 3 PCLKB
0008 A031h	SCI1	Receive Data Register L	RDRL	8	8	2 or 3 PCLKB
0008 A032h	SCI1	Modulation Duty Register	MDDR	8	8	2 or 3 PCLKB
0008 A0A0h	SCI5	Serial Mode Register	SMR	8	8	2 or 3 PCLKB
0008 A0A1h	SCI5	Bit Rate Register	BRR	8	8	2 or 3 PCLKB
0008 A0A2h	SCI5	Serial Control Register	SCR	8	8	2 or 3 PCLKB
0008 A0A3h	SCI5	Transmit Data Register	TDR	8	8	2 or 3 PCLKB
0008 A0A4h	SCI5	Serial Status Register	SSR	8	8	2 or 3 PCLKB
0008 A0A5h	SCI5	Receive Data Register	RDR	8	8	2 or 3 PCLKB
0008 A0A6h	SMCI5	Smart Card Mode Register	SCMR	8	8	2 or 3 PCLKB
0008 A0A7h	SCI5	Serial Extended Mode Register	SEMR	8	8	2 or 3 PCLKB
0008 A0A8h	SCI5	Noise Filter Setting Register	SNFR	8	8	2 or 3 PCLKB
0008 A0A9h	SCI5	I^2C Mode Register 1	SIMR1	8	8	2 or 3 PCLKB
0008 A0AAh	SCI5	I^2C Mode Register 2	SIMR2	8	8	2 or 3 PCLKB
0008 A0ABh	SCI5	I^2C Mode Register 3	SIMR3	8	8	2 or 3 PCLKB
0008 A0ACh	SCI5	I^2C Status Register	SISR	8	8	2 or 3 PCLKB
0008 A0ADh	SCI5	SPI Mode Register	SPMR	8	8	2 or 3 PCLKB
0008 A0AEh	SCI5	Transmit Data Register HL	TDRHL	16	16	4 or 5 PCLKB
0008 A0AEh	SCI5	Transmit Data Register H	TDRH	8	8	2 or 3 PCLKB
0008 A0AFh	SCI5	Transmit Data Register L	TDRL	8	8	2 or 3 PCLKB
0008 A0B0h	SCI5	Receive Data Register HL	RDRHL	16	16	4 or 5 PCLKB
0008 A0B0h	SCI5	Receive Data Register H	RDRH	8	8	2 or 3 PCLKB
0008 A0B1h	SCI5	Receive Data Register L	RDRL	8	8	2 or 3 PCLKB
0008 A0B2h	SCI5	Modulation Duty Register	MDDR	8	8	2 or 3 PCLKB
0008 A0C0h	SCI6	Serial Mode Register	SMR	8	8	2 or 3 PCLKB
0008 A0C1h	SCI6	Bit Rate Register	BRR	8	8	2 or 3 PCLKB
0008 A0C2h	SCI6	Serial Control Register	SCR	8	8	2 or 3 PCLKB
0008 A0C3h	SCI6	Transmit Data Register	TDR	8	8	2 or 3 PCLKB
0008 A0C4h	SCI6	Serial Status Register	SSR	8	8	2 or 3 PCLKB
0008 A0C5h	SCI6	Receive Data Register	RDR	8	8	2 or 3 PCLKB
0008 A0C6h	SMCI6	Smart Card Mode Register	SCMR	8	8	2 or 3 PCLKB
0008 A0C7h	SCI6	Serial Extended Mode Register	SEMR	8	8	2 or 3 PCLKB
0008 A0C8h	SCI6	Noise Filter Setting Register	SNFR	8	8	2 or 3 PCLKB
0008 A0C9h	SCI6	I^2C Mode Register 1	SIMR1	8	8	2 or 3 PCLKB
0008 A0CAh	SCI6	I^2C Mode Register 2	SIMR2	8	8	2 or 3 PCLKB
0008 A0CBh	SCI6	I^2C Mode Register 3	SIMR3	8	8	2 or 3 PCLKB
0008 A0CCh	SCI6	I^2C Status Register	SISR	8	8	2 or 3 PCLKB
0008 A0CDh	SCI6	SPI Mode Register	SPMR	8	8	2 or 3 PCLKB
0008 A0CEh	SCI6	Transmit Data Register HL	TDRHL	16	16	4 or 5 PCLKB
0008 A0CEh	SCI6	Transmit Data Register H	TDRH	8	8	2 or 3 PCLKB
0008 A0CFh	SCI6	Transmit Data Register L	TDRL	8	8	2 or 3 PCLKB
0008 A0D0h	SCI6	Receive Data Register HL	RDRHL	16	16	4 or 5 PCLKB
0008 A0D0h	SCI6	Receive Data Register H	RDRH	8	8	2 or 3 PCLKB
0008 A0D1h	SCI6	Receive Data Register L	RDRL	8	8	2 or 3 PCLKB
0008 A0D2h	SCI6	Modulation Duty Register	MDDR	8	8	2 or 3 PCLKB
0008 A100h	SCI8	Serial Mode Register	SMR	8	8	2 or 3 PCLKB
0008 A101h	SCI8	Bit Rate Register	BRR	8	8	2 or 3 PCLKB
0008 A102h	SCI8	Serial Control Register	SCR	8	8	2 or 3 PCLKB
0008 A103h	SCI8	Transmit Data Register	TDR	8	8	2 or 3 PCLKB
0008 A104h	SCI8	Serial Status Register	SSR	8	8	2 or 3 PCLKB

Table 4.1 List of I/O Registers (Address Order) (17/40)

Address	Module Symbol	Register Name	Register Symbol	Number of Bits	Access Size	Number of Access Cycles ICLK ≥ PCLK
0008 A105h	SCI8	Receive Data Register	RDR	8	8	2 or 3 PCLKB
0008 A106h	SMCI8	Smart Card Mode Register	SCMR	8	8	2 or 3 PCLKB
0008 A107h	SCI8	Serial Extended Mode Register	SEMR	8	8	2 or 3 PCLKB
0008 A108h	SCI8	Noise Filter Setting Register	SNFR	8	8	2 or 3 PCLKB
0008 A109h	SCI8	I^2C Mode Register 1	SIMR1	8	8	2 or 3 PCLKB
0008 A10Ah	SCI8	I^2C Mode Register 2	SIMR2	8	8	2 or 3 PCLKB
0008 A10Bh	SCI8	I^2C Mode Register 3	SIMR3	8	8	2 or 3 PCLKB
0008 A10Ch	SCI8	I^2C Status Register	SISR	8	8	2 or 3 PCLKB
0008 A10Dh	SCI8	SPI Mode Register	SPMR	8	8	2 or 3 PCLKB
0008 A10Eh	SCI8	Transmit Data Register HL	TDRHL	16	16	4 or 5 PCLKB
0008 A10Eh	SCI8	Transmit Data Register H	TDRH	8	8	2 or 3 PCLKB
0008 A10Fh	SCI8	Transmit Data Register L	TDRL	8	8	2 or 3 PCLKB
0008 A110h	SCI8	Receive Data Register HL	RDRHL	16	16	4 or 5 PCLKB
0008 A110h	SCI8	Receive Data Register H	RDRH	8	8	2 or 3 PCLKB
0008 A111h	SCI8	Receive Data Register L	RDRL	8	8	2 or 3 PCLKB
0008 A112h	SCI8	Modulation Duty Register	MDDR	8	8	2 or 3 PCLKB
0008 A120h	SCI9	Serial Mode Register	SMR	8	8	2 or 3 PCLKB
0008 A121h	SCI9	Bit Rate Register	BRR	8	8	2 or 3 PCLKB
0008 A122h	SCI9	Serial Control Register	SCR	8	8	2 or 3 PCLKB
0008 A123h	SCI9	Transmit Data Register	TDR	8	8	2 or 3 PCLKB
0008 A124h	SCI9	Serial Status Register	SSR	8	8	2 or 3 PCLKB
0008 A125h	SCI9	Receive Data Register	RDR	8	8	2 or 3 PCLKB
0008 A126h	SMCI9	Smart Card Mode Register	SCMR	8	8	2 or 3 PCLKB
0008 A127h	SCI9	Serial Extended Mode Register	SEMR	8	8	2 or 3 PCLKB
0008 A128h	SCI9	Noise Filter Setting Register	SNFR	8	8	2 or 3 PCLKB
0008 A129h	SCI9	I^2C Mode Register 1	SIMR1	8	8	2 or 3 PCLKB
0008 A12Ah	SCI9	I^2C Mode Register 2	SIMR2	8	8	2 or 3 PCLKB
0008 A12Bh	SCI9	I^2C Mode Register 3	SIMR3	8	8	2 or 3 PCLKB
0008 A12Ch	SCI9	I^2C Status Register	SISR	8	8	2 or 3 PCLKB
0008 A12Dh	SCI9	SPI Mode Register	SPMR	8	8	2 or 3 PCLKB
0008 A12Eh	SCI9	Transmit Data Register HL	TDRHL	16	16	4 or 5 PCLKB
0008 A12Eh	SCI9	Transmit Data Register H	TDRH	8	8	2 or 3 PCLKB
0008 A12Fh	SCI9	Transmit Data Register L	TDRL	8	8	2 or 3 PCLKB
0008 A130h	SCI9	Receive Data Register HL	RDRHL	16	16	4 or 5 PCLKB
0008 A130h	SCI9	Receive Data Register H	RDRH	8	8	2 or 3 PCLKB
0008 A131h	SCI9	Receive Data Register L	RDRL	8	8	2 or 3 PCLKB
0008 A132h	SCI9	Modulation Duty Register	MDDR	8	8	2 or 3 PCLKB
0008 B000h	CAC	CAC Control Register 0	CACR0	8	8	2 or 3 PCLKB
0008 B001h	CAC	CAC Control Register 1	CACR1	8	8	2 or 3 PCLKB
0008 B002h	CAC	CAC Control Register 2	CACR2	8	8	2 or 3 PCLKB
0008 B003h	CAC	CAC Interrupt Request Enable Register	CAICR	8	8	2 or 3 PCLKB
0008 B004h	CAC	CAC Status Register	CASTR	8	8	2 or 3 PCLKB
0008 B006h	CAC	CAC Upper-Limit Value Setting Register	CAULVR	16	16	2 or 3 PCLKB
0008 B008h	CAC	CAC Lower-Limit Value Setting Register	CALLVR	16	16	2 or 3 PCLKB
0008 B00Ah	CAC	CAC Counter Buffer Register	CACNTBR	16	16	2 or 3 PCLKB
0008 B080h	DOC	DOC Control Register	DOCR	8	8	2 or 3 PCLKB
0008 B082h	DOC	DOC Data Input Register	DODIR	16	16	2 or 3 PCLKB
0008 B084h	DOC	DOC Data Setting Register	DODSR	16	16	2 or 3 PCLKB
0008 C000h	PORT0	Port Direction Register	PDR	8	8	2 or 3 PCLKB
0008 C001h	PORT1	Port Direction Register	PDR	8	8	2 or 3 PCLKB
0008 C002h	PORT2	Port Direction Register	PDR	8	8	2 or 3 PCLKB
0008 C003h	PORT3	Port Direction Register	PDR	8	8	2 or 3 PCLKB

Table 4.1 List of I/O Registers (Address Order) (18/40)

Address	Module Symbol	Register Name	Register Symbol	Number of Bits	Access Size	Number of Access Cycles ICLK ≥ PCLK
0008 C004h	PORT4	Port Direction Register	PDR	8	8	2 or 3 PCLKB
0008 C005h	PORT5	Port Direction Register	PDR	8	8	2 or 3 PCLKB
0008 C006h	PORT6	Port Direction Register	PDR	8	8	2 or 3 PCLKB
0008 C007h	PORT7	Port Direction Register	PDR	8	8	2 or 3 PCLKB
0008 C008h	PORT8	Port Direction Register	PDR	8	8	2 or 3 PCLKB
0008 C009h	PORT9	Port Direction Register	PDR	8	8	2 or 3 PCLKB
0008 C00Ah	PORTA	Port Direction Register	PDR	8	8	2 or 3 PCLKB
0008 C00Bh	PORTB	Port Direction Register	PDR	8	8	2 or 3 PCLKB
0008 C00Ch	PORTC	Port Direction Register	PDR	8	8	2 or 3 PCLKB
0008 C00Dh	PORTD	Port Direction Register	PDR	8	8	2 or 3 PCLKB
0008 C00Eh	PORTE	Port Direction Register	PDR	8	8	2 or 3 PCLKB
0008 C00Fh	PORTF	Port Direction Register	PDR	8	8	2 or 3 PCLKB
0008 C010h	PORTG	Port Direction Register	PDR	8	8	2 or 3 PCLKB
0008 C020h	PORT0	Port Output Data Register	PODR	8	8	2 or 3 PCLKB
0008 C021h	PORT1	Port Output Data Register	PODR	8	8	2 or 3 PCLKB
0008 C022h	PORT2	Port Output Data Register	PODR	8	8	2 or 3 PCLKB
0008 C023h	PORT3	Port Output Data Register	PODR	8	8	2 or 3 PCLKB
0008 C024h	PORT4	Port Output Data Register	PODR	8	8	2 or 3 PCLKB
0008 C025h	PORT5	Port Output Data Register	PODR	8	8	2 or 3 PCLKB
0008 C026h	PORT6	Port Output Data Register	PODR	8	8	2 or 3 PCLKB
0008 C027h	PORT7	Port Output Data Register	PODR	8	8	2 or 3 PCLKB
0008 C028h	PORT8	Port Output Data Register	PODR	8	8	2 or 3 PCLKB
0008 C029h	PORT9	Port Output Data Register	PODR	8	8	2 or 3 PCLKB
0008 C02Ah	PORTA	Port Output Data Register	PODR	8	8	2 or 3 PCLKB
0008 C02Bh	PORTB	Port Output Data Register	PODR	8	8	2 or 3 PCLKB
0008 C02Ch	PORTC	Port Output Data Register	PODR	8	8	2 or 3 PCLKB
0008 C02Dh	PORTD	Port Output Data Register	PODR	8	8	2 or 3 PCLKB
0008 C02Eh	PORTE	Port Output Data Register	PODR	8	8	2 or 3 PCLKB
0008 C02Fh	PORTF	Port Output Data Register	PODR	8	8	2 or 3 PCLKB
0008 C030h	PORTG	Port Output Data Register	PODR	8	8	2 or 3 PCLKB
0008 C040h	PORT0	Port Input Data Register	PIDR	8	8	2 or 3 PCLKB
0008 C041h	PORT1	Port Input Data Register	PIDR	8	8	2 or 3 PCLKB
0008 C042h	PORT2	Port Input Data Register	PIDR	8	8	2 or 3 PCLKB
0008 C043h	PORT3	Port Input Data Register	PIDR	8	8	2 or 3 PCLKB
0008 C044h	PORT4	Port Input Data Register	PIDR	8	8	2 or 3 PCLKB
0008 C045h	PORT5	Port Input Data Register	PIDR	8	8	2 or 3 PCLKB
0008 C046h	PORT6	Port Input Data Register	PIDR	8	8	2 or 3 PCLKB
0008 C047h	PORT7	Port Input Data Register	PIDR	8	8	2 or 3 PCLKB
0008 C048h	PORT8	Port Input Data Register	PIDR	8	8	2 or 3 PCLKB
0008 C049h	PORT9	Port Input Data Register	PIDR	8	8	2 or 3 PCLKB
0008 C04Ah	PORTA	Port Input Data Register	PIDR	8	8	2 or 3 PCLKB
0008 C04Bh	PORTB	Port Input Data Register	PIDR	8	8	2 or 3 PCLKB
0008 C04Ch	PORTC	Port Input Data Register	PIDR	8	8	2 or 3 PCLKB
0008 C04Dh	PORTD	Port Input Data Register	PIDR	8	8	2 or 3 PCLKB
0008 C04Eh	PORTE	Port Input Data Register	PIDR	8	8	2 or 3 PCLKB
0008 C04Fh	PORTF	Port Input Data Register	PIDR	8	8	2 or 3 PCLKB
0008 C050h	PORTG	Port Input Data Register	PIDR	8	8	2 or 3 PCLKB
0008 C060h	PORT0	Port Mode Register	PMR	8	8	2 or 3 PCLKB
0008 C061h	PORT1	Port Mode Register	PMR	8	8	2 or 3 PCLKB
0008 C062h	PORT2	Port Mode Register	PMR	8	8	2 or 3 PCLKB
0008 C063h	PORT3	Port Mode Register	PMR	8	8	2 or 3 PCLKB
0008 C067h	PORT7	Port Mode Register	PMR	8	8	2 or 3 PCLKB

Table 4.1 List of I/O Registers (Address Order) (19/40)

Address	Module Symbol	Register Name	Register Symbol	Number of Bits	Access Size	Number of Access Cycles ICLK ≥ PCLK
0008 C068h	PORT8	Port Mode Register	PMR	8	8	2 or 3 PCLKB
0008 C069h	PORT9	Port Mode Register	PMR	8	8	2 or 3 PCLKB
0008 C06Ah	PORTA	Port Mode Register	PMR	8	8	2 or 3 PCLKB
0008 C06Bh	PORTB	Port Mode Register	PMR	8	8	2 or 3 PCLKB
0008 C06Ch	PORTC	Port Mode Register	PMR	8	8	2 or 3 PCLKB
0008 C06Dh	PORTD	Port Mode Register	PMR	8	8	2 or 3 PCLKB
0008 C06Eh	PORTE	Port Mode Register	PMR	8	8	2 or 3 PCLKB
0008 C06Fh	PORTF	Port Mode Register	PMR	8	8	2 or 3 PCLKB
0008 C070h	PORTG	Port Mode Register	PMR	8	8	2 or 3 PCLKB
0008 C080h	PORT0	Open Drain Control Register 0	ODR0	8	8, 16	2 or 3 PCLKB
0008 C082h	PORT1	Open Drain Control Register 0	ODR0	8	8, 16	2 or 3 PCLKB
0008 C083h	PORT1	Open Drain Control Register 1	ODR1	8	8, 16	2 or 3 PCLKB
0008 C084h	PORT2	Open Drain Control Register 0	ODR0	8	8, 16	2 or 3 PCLKB
0008 C085h	PORT2	Open Drain Control Register 1	ODR1	8	8, 16	2 or 3 PCLKB
0008 C086h	PORT3	Open Drain Control Register 0	ODR0	8	8, 16	2 or 3 PCLKB
0008 C087h	PORT3	Open Drain Control Register 1	ODR1	8	8, 16	2 or 3 PCLKB
0008 C08Eh	PORT7	Open Drain Control Register 0	ODR0	8	8, 16	2 or 3 PCLKB
0008 C08Fh	PORT7	Open Drain Control Register 1	ODR1	8	8, 16	2 or 3 PCLKB
0008 C090h	PORT8	Open Drain Control Register 0	ODR0	8	8, 16	2 or 3 PCLKB
0008 C091h	PORT8	Open Drain Control Register 1	ODR1	8	8, 16	2 or 3 PCLKB
0008 C092h	PORT9	Open Drain Control Register 0	ODR0	8	8, 16	2 or 3 PCLKB
0008 C093h	PORT9	Open Drain Control Register 1	ODR1	8	8, 16	2 or 3 PCLKB
0008 C094h	PORTA	Open Drain Control Register 0	ODR0	8	8, 16	2 or 3 PCLKB
0008 C095h	PORTA	Open Drain Control Register 1	ODR1	8	8, 16	2 or 3 PCLKB
0008 C096h	PORTB	Open Drain Control Register 0	ODR0	8	8, 16	2 or 3 PCLKB
0008 C097h	PORTB	Open Drain Control Register 1	ODR1	8	8, 16	2 or 3 PCLKB
0008 C098h	PORTC	Open Drain Control Register 0	ODR0	8	8, 16	2 or 3 PCLKB
0008 C099h	PORTC	Open Drain Control Register 1	ODR1	8	8, 16	2 or 3 PCLKB
0008 C09Ah	PORTD	Open Drain Control Register 0	ODR0	8	8, 16	2 or 3 PCLKB
0008 C09Bh	PORTD	Open Drain Control Register 1	ODR1	8	8, 16	2 or 3 PCLKB
0008 C09Ch	PORTE	Open Drain Control Register 0	ODR0	8	8, 16	2 or 3 PCLKB
0008 C09Dh	PORTE	Open Drain Control Register 1	ODR1	8	8, 16	2 or 3 PCLKB
0008 C09Eh	PORTF	Open Drain Control Register 0	ODR0	8	8, 16	2 or 3 PCLKB
0008 C0A0h	PORTG	Open Drain Control Register 0	ODR0	8	8, 16	2 or 3 PCLKB
0008 C0C0h	PORT0	Pull-Up Control Register	PCR	8	8	2 or 3 PCLKB
0008 C0C1h	PORT1	Pull-Up Control Register	PCR	8	8	2 or 3 PCLKB
0008 C0C2h	PORT2	Pull-Up Control Register	PCR	8	8	2 or 3 PCLKB
0008 C0C3h	PORT3	Pull-Up Control Register	PCR	8	8	2 or 3 PCLKB
0008 C0C4h	PORT4	Pull-Up Control Register	PCR	8	8	2 or 3 PCLKB
0008 C0C5h	PORT5	Pull-Up Control Register	PCR	8	8	2 or 3 PCLKB
0008 C0C6h	PORT6	Pull-Up Control Register	PCR	8	8	2 or 3 PCLKB
0008 C0C7h	PORT7	Pull-Up Control Register	PCR	8	8	2 or 3 PCLKB
0008 C0C8h	PORT8	Pull-Up Control Register	PCR	8	8	2 or 3 PCLKB
0008 C0C9h	PORT9	Pull-Up Control Register	PCR	8	8	2 or 3 PCLKB
0008 C0CAh	PORTA	Pull-Up Control Register	PCR	8	8	2 or 3 PCLKB
0008 C0CBh	PORTB	Pull-Up Control Register	PCR	8	8	2 or 3 PCLKB
0008 C0CCh	PORTC	Pull-Up Control Register	PCR	8	8	2 or 3 PCLKB
0008 C0CDh	PORTD	Pull-Up Control Register	PCR	8	8	2 or 3 PCLKB
0008 C0CEh	PORTE	Pull-Up Control Register	PCR	8	8	2 or 3 PCLKB
0008 C0CFh	PORTF	Pull-Up Control Register	PCR	8	8	2 or 3 PCLKB
0008 C0D0h	PORTG	Pull-Up Control Register	PCR	8	8	2 or 3 PCLKB
0008 C0E0h	PORT0	Drive Capacity Control Register	DSCR	8	8	2 or 3 PCLKB

Table 4.1 List of I/O Registers (Address Order) (20/40)

Address	Module Symbol	Register Name	Register Symbol	Number of Bits	Access Size	Number of Access Cycles ICLK ≥ PCLK
0008 C0E1h	PORT1	Drive Capacity Control Register	DSCR	8	8	2 or 3 PCLKB
0008 C0E2h	PORT2	Drive Capacity Control Register	DSCR	8	8	2 or 3 PCLKB
0008 C0E3h	PORT3	Drive Capacity Control Register	DSCR	8	8	2 or 3 PCLKB
0008 C0E7h	PORT7	Drive Capacity Control Register	DSCR	8	8	2 or 3 PCLKB
0008 C0E8h	PORT8	Drive Capacity Control Register	DSCR	8	8	2 or 3 PCLKB
0008 C0E9h	PORT9	Drive Capacity Control Register	DSCR	8	8	2 or 3 PCLKB
0008 C0EAh	PORTA	Drive Capacity Control Register	DSCR	8	8	2 or 3 PCLKB
0008 C0EBh	PORTB	Drive Capacity Control Register	DSCR	8	8	2 or 3 PCLKB
0008 C0ECh	PORTC	Drive Capacity Control Register	DSCR	8	8	2 or 3 PCLKB
0008 C0EDh	PORTD	Drive Capacity Control Register	DSCR	8	8	2 or 3 PCLKB
0008 C0EEh	PORTE	Drive Capacity Control Register	DSCR	8	8	2 or 3 PCLKB
0008 C0EFh	PORTF	Drive Capacity Control Register	DSCR	8	8	2 or 3 PCLKB
0008 C0F0h	PORTG	Drive Capacity Control Register	DSCR	8	8	2 or 3 PCLKB
0008 C11Fh	MPC	Write-Protect Register	PWPR	8	8	2 or 3 PCLKB
0008 C140h	MPC	P00 Pin Function Control Register	P00PFS	8	8	2 or 3 PCLKB
0008 C141h	MPC	P01 Pin Function Control Register	P01PFS	8	8	2 or 3 PCLKB
0008 C142h	MPC	P02 Pin Function Control Register	P02PFS	8	8	2 or 3 PCLKB
0008 C148h	MPC	P10 Pin Function Control Register	P10PFS	8	8	2 or 3 PCLKB
0008 C149h	MPC	P11 Pin Function Control Register	P11PFS	8	8	2 or 3 PCLKB
0008 C14Ah	MPC	P12 Pin Function Control Register	P12PFS	8	8	2 or 3 PCLKB
0008 C14Bh	MPC	P13 Pin Function Control Register	P13PFS	8	8	2 or 3 PCLKB
0008 C14Ch	MPC	P14 Pin Function Control Register	P14PFS	8	8	2 or 3 PCLKB
0008 C14Dh	MPC	P15 Pin Function Control Register	P15PFS	8	8	2 or 3 PCLKB
0008 C14Eh	MPC	P16 Pin Function Control Register	P16PFS	8	8	2 or 3 PCLKB
0008 C14Fh	MPC	P17 Pin Function Control Register	P17PFS	8	8	2 or 3 PCLKB
0008 C150h	MPC	P20 Pin Function Control Register	P20PFS	8	8	2 or 3 PCLKB
0008 C151h	MPC	P21 Pin Function Control Register	P21PFS	8	8	2 or 3 PCLKB
0008 C152h	MPC	P22 Pin Function Control Register	P22PFS	8	8	2 or 3 PCLKB
0008 C153h	MPC	P23 Pin Function Control Register	P23PFS	8	8	2 or 3 PCLKB
0008 C154h	MPC	P24 Pin Function Control Register	P24PFS	8	8	2 or 3 PCLKB
0008 C155h	MPC	P25 Pin Function Control Register	P25PFS	8	8	2 or 3 PCLKB
0008 C156h	MPC	P26 Pin Function Control Register	P26PFS	8	8	2 or 3 PCLKB
0008 C157h	MPC	P27 Pin Function Control Register	P27PFS	8	8	2 or 3 PCLKB
0008 C158h	MPC	P30 Pin Function Control Register	P30PFS	8	8	2 or 3 PCLKB
0008 C159h	MPC	P31 Pin Function Control Register	P31PFS	8	8	2 or 3 PCLKB
0008 C15Ah	MPC	P32 Pin Function Control Register	P32PFS	8	8	2 or 3 PCLKB
0008 C15Bh	MPC	P33 Pin Function Control Register	P33PFS	8	8	2 or 3 PCLKB
0008 C15Ch	MPC	P34 Pin Function Control Register	P34PFS	8	8	2 or 3 PCLKB
0008 C15Dh	MPC	P35 Pin Function Control Register	P35PFS	8	8	2 or 3 PCLKB
0008 C160h	MPC	P40 Pin Function Control Register	P40PFS	8	8	2 or 3 PCLKB
0008 C161h	MPC	P41 Pin Function Control Register	P41PFS	8	8	2 or 3 PCLKB
0008 C162h	MPC	P42 Pin Function Control Register	P42PFS	8	8	2 or 3 PCLKB
0008 C163h	MPC	P43 Pin Function Control Register	P43PFS	8	8	2 or 3 PCLKB
0008 C164h	MPC	P44 Pin Function Control Register	P44PFS	8	8	2 or 3 PCLKB
0008 C165h	MPC	P45 Pin Function Control Register	P45PFS	8	8	2 or 3 PCLKB
0008 C166h	MPC	P46 Pin Function Control Register	P46PFS	8	8	2 or 3 PCLKB
0008 C167h	MPC	P47 Pin Function Control Register	P47PFS	8	8	2 or 3 PCLKB
0008 C168h	MPC	P50 Pin Function Control Register	P50PFS	8	8	2 or 3 PCLKB
0008 C169h	MPC	P51 Pin Function Control Register	P51PFS	8	8	2 or 3 PCLKB
0008 C16Ah	MPC	P52 Pin Function Control Register	P52PFS	8	8	2 or 3 PCLKB
0008 C16Bh	MPC	P53 Pin Function Control Register	P53PFS	8	8	2 or 3 PCLKB
0008 C16Ch	MPC	P54 Pin Function Control Register	P54PFS	8	8	2 or 3 PCLKB

Table 4.1 List of I/O Registers (Address Order) (21/40)

Address	Module Symbol	Register Name	Register Symbol	Number of Bits	Access Size	Number of Access Cycles ICLK ≥ PCLK
0008 C16Dh	MPC	P55 Pin Function Control Register	P55PFS	8	8	2 or 3 PCLKB
0008 C170h	MPC	P60 Pin Function Control Register	P60PFS	8	8	2 or 3 PCLKB
0008 C171h	MPC	P61 Pin Function Control Register	P61PFS	8	8	2 or 3 PCLKB
0008 C172h	MPC	P62 Pin Function Control Register	P62PFS	8	8	2 or 3 PCLKB
0008 C173h	MPC	P63 Pin Function Control Register	P63PFS	8	8	2 or 3 PCLKB
0008 C174h	MPC	P64 Pin Function Control Register	P64PFS	8	8	2 or 3 PCLKB
0008 C175h	MPC	P65 Pin Function Control Register	P65PFS	8	8	2 or 3 PCLKB
0008 C178h	MPC	P70 Pin Function Control Register	P70PFS	8	8	2 or 3 PCLKB
0008 C179h	MPC	P71 Pin Function Control Register	P71PFS	8	8	2 or 3 PCLKB
0008 C17Ah	MPC	P72 Pin Function Control Register	P72PFS	8	8	2 or 3 PCLKB
0008 C17Bh	MPC	P73 Pin Function Control Register	P73PFS	8	8	2 or 3 PCLKB
0008 C17Ch	MPC	P74 Pin Function Control Register	P74PFS	8	8	2 or 3 PCLKB
0008 C17Dh	MPC	P75 Pin Function Control Register	P75PFS	8	8	2 or 3 PCLKB
0008 C17Eh	MPC	P76 Pin Function Control Register	P76PFS	8	8	2 or 3 PCLKB
0008 C180h	MPC	P80 Pin Function Control Register	P80PFS	8	8	2 or 3 PCLKB
0008 C181h	MPC	P81 Pin Function Control Register	P81PFS	8	8	2 or 3 PCLKB
0008 C182h	MPC	P82 Pin Function Control Register	P82PFS	8	8	2 or 3 PCLKB
0008 C183h	MPC	P83 Pin Function Control Register	P83PFS	8	8	2 or 3 PCLKB
0008 C184h	MPC	P84 Pin Function Control Register	P84PFS	8	8	2 or 3 PCLKB
0008 C188h	MPC	P90 Pin Function Control Register	P90PFS	8	8	2 or 3 PCLKB
0008 C189h	MPC	P91 Pin Function Control Register	P91PFS	8	8	2 or 3 PCLKB
0008 C18Ah	MPC	P92 Pin Function Control Register	P92PFS	8	8	2 or 3 PCLKB
0008 C18Bh	MPC	P93 Pin Function Control Register	P93PFS	8	8	2 or 3 PCLKB
0008 C18Ch	MPC	P94 Pin Function Control Register	P94PFS	8	8	2 or 3 PCLKB
0008 C18Dh	MPC	P95 Pin Function Control Register	P95PFS	8	8	2 or 3 PCLKB
0008 C18Eh	MPC	P96 Pin Function Control Register	P96PFS	8	8	2 or 3 PCLKB
0008 C190h	MPC	PA0 Pin Function Control Register	PA0PFS	8	8	2 or 3 PCLKB
0008 C191h	MPC	PA1 Pin Function Control Register	PA1PFS	8	8	2 or 3 PCLKB
0008 C192h	MPC	PA2 Pin Function Control Register	PA2PFS	8	8	2 or 3 PCLKB
0008 C193h	MPC	PA3 Pin Function Control Register	PA3PFS	8	8	2 or 3 PCLKB
0008 C194h	MPC	PA4 Pin Function Control Register	PA4PFS	8	8	2 or 3 PCLKB
0008 C195h	MPC	PA5 Pin Function Control Register	PA5PFS	8	8	2 or 3 PCLKB
0008 C196h	MPC	PA6 Pin Function Control Register	PA6PFS	8	8	2 or 3 PCLKB
0008 C197h	MPC	PA7 Pin Function Control Register	PA7PFS	8	8	2 or 3 PCLKB
0008 C198h	MPC	PB0 Pin Function Control Register	PB0PFS	8	8	2 or 3 PCLKB
0008 C199h	MPC	PB1 Pin Function Control Register	PB1PFS	8	8	2 or 3 PCLKB
0008 C19Ah	MPC	PB2 Pin Function Control Register	PB2PFS	8	8	2 or 3 PCLKB
0008 C19Bh	MPC	PB3 Pin Function Control Register	PB3PFS	8	8	2 or 3 PCLKB
0008 C19Ch	MPC	PB4 Pin Function Control Register	PB4PFS	8	8	2 or 3 PCLKB
0008 C19Dh	MPC	PB5 Pin Function Control Register	PB5PFS	8	8	2 or 3 PCLKB
0008 C19Eh	MPC	PB6 Pin Function Control Register	PB6PFS	8	8	2 or 3 PCLKB
0008 C19Fh	MPC	PB7 Pin Function Control Register	PB7PFS	8	8	2 or 3 PCLKB
0008 C1A0h	MPC	PC0 Pin Function Control Register	PC0PFS	8	8	2 or 3 PCLKB
0008 C1A1h	MPC	PC1 Pin Function Control Register	PC1PFS	8	8	2 or 3 PCLKB
0008 C1A2h	MPC	PC2 Pin Function Control Register	PC2PFS	8	8	2 or 3 PCLKB
0008 C1A3h	MPC	PC3 Pin Function Control Register	PC3PFS	8	8	2 or 3 PCLKB
0008 C1A4h	MPC	PC4 Pin Function Control Register	PC4PFS	8	8	2 or 3 PCLKB
0008 C1A5h	MPC	PC5 Pin Function Control Register	PC5PFS	8	8	2 or 3 PCLKB
0008 C1A6h	MPC	PC6 Pin Function Control Register	PC6PFS	8	8	2 or 3 PCLKB
0008 C1A8h	MPC	PD0 Pin Function Control Register	PD0PFS	8	8	2 or 3 PCLKB
0008 C1A9h	MPC	PD1 Pin Function Control Register	PD1PFS	8	8	2 or 3 PCLKB
0008 C1AAh	MPC	PD2 Pin Function Control Register	PD2PFS	8	8	2 or 3 PCLKB

Table 4.1 List of I/O Registers (Address Order) (22/40)

Address	Module Symbol	Register Name	Register Symbol	Number of Bits	Access Size	Number of Access Cycles ICLK ≥ PCLK
0008 C1ABh	MPC	PD3 Pin Function Control Register	PD3PFS	8	8	2 or 3 PCLKB
0008 C1ACh	MPC	PD4 Pin Function Control Register	PD4PFS	8	8	2 or 3 PCLKB
0008 C1ADh	MPC	PD5 Pin Function Control Register	PD5PFS	8	8	2 or 3 PCLKB
0008 C1AEh	MPC	PD6 Pin Function Control Register	PD6PFS	8	8	2 or 3 PCLKB
0008 C1AFh	MPC	PD7 Pin Function Control Register	PD7PFS	8	8	2 or 3 PCLKB
0008 C1B0h	MPC	PE0 Pin Function Control Register	PE0PFS	8	8	2 or 3 PCLKB
0008 C1B1h	MPC	PE1 Pin Function Control Register	PE1PFS	8	8	2 or 3 PCLKB
0008 C1B2h	MPC	PE2 Pin Function Control Register	PE2PFS	8	8	2 or 3 PCLKB
0008 C1B3h	MPC	PE3 Pin Function Control Register	PE3PFS	8	8	2 or 3 PCLKB
0008 C1B4h	MPC	PE4 Pin Function Control Register	PE4PFS	8	8	2 or 3 PCLKB
0008 C1B5h	MPC	PE5 Pin Function Control Register	PE5PFS	8	8	2 or 3 PCLKB
0008 C1B6h	MPC	PE6 Pin Function Control Register	PE6PFS	8	8	2 or 3 PCLKB
0008 C1B8h	MPC	PF0 Pin Function Control Register	PF0PFS	8	8	2 or 3 PCLKB
0008 C1B9h	MPC	PF1 Pin Function Control Register	PF1PFS	8	8	2 or 3 PCLKB
0008 C1BAh	MPC	PF2 Pin Function Control Register	PF2PFS	8	8	2 or 3 PCLKB
0008 C1BBh	MPC	PF3 Pin Function Control Register	PF3PFS	8	8	2 or 3 PCLKB
0008 C1C0h	MPC	PG0 Pin Function Control Register	PG0PFS	8	8	2 or 3 PCLKB
0008 C1C1h	MPC	PG1 Pin Function Control Register	PG1PFS	8	8	2 or 3 PCLKB
0008 C1C2h	MPC	PG2 Pin Function Control Register	PG2PFS	8	8	2 or 3 PCLKB
0008 C290h	SYSTEM	Reset Status Register 0	RSTSR0	8	8	4 or 5 PCLKB
0008 C291h	SYSTEM	Reset Status Register 1	RSTSR1	8	8	4 or 5 PCLKB
0008 C293h	SYSTEM	Main Clock Oscillator Forced Oscillation Control Register	MOFCR	8	8	4 or 5 PCLKB
0008 C297h	SYSTEM	Voltage Monitoring Circuit Control Register	LVCMPCR	8	8	4 or 5 PCLKB
0008 C298h	SYSTEM	Voltage Detection Level Select Register	LVDLVLR	8	8	4 or 5 PCLKB
0008 C29Ah	SYSTEM	Voltage Monitoring 1 Circuit Control Register 0	LVD1CR0	8	8	4 or 5 PCLKB
0008 C29Bh	SYSTEM	Voltage Monitoring 2 Circuit Control Register 0	LVD2CR0	8	8	4 or 5 PCLKB
0008 C4C0h	POE	Input Level Control/Status Register 1	ICSR1	16	8, 16	2 or 3 PCLKB
0008 C4C2h	POE	Output Level Control/Status Register 1	OCSR1	16	8, 16	2 or 3 PCLKB
0008 C4C4h	POE	Input Level Control/Status Register 2	ICSR2	16	8, 16	2 or 3 PCLKB
0008 C4C6h	POE	Output Level Control/Status Register 2	OCSR2	16	8, 16	2 or 3 PCLKB
0008 C4C8h	POE	Input Level Control/Status Register 3	ICSR3	16	8, 16	2 or 3 PCLKB
0008 C4CAh	POE	Software Port Output Enable Register	SPOER	8	8	2 or 3 PCLKB
0008 C4CBh	POE	Port Output Enable Control Register 1	POECR1	8	8	2 or 3 PCLKB
0008 C4CCh	POE	Port Output Enable Control Register 2	POECR2	16	16	2 or 3 PCLKB
0008 C4CEh	POE	Port Output Enable Control Register 3	POECR3	16	16	2 or 3 PCLKB
0008 C4D0h	POE	Port Output Enable Control Register 4	POECR4	16	16	2 or 3 PCLKB
0008 C4D2h	POE	Port Output Enable Control Register 5	POECR5	16	16	2 or 3 PCLKB
0008 C4D4h	POE	Port Output Enable Control Register 6	POECR6	16	16	2 or 3 PCLKB
0008 C4D6h	POE	Input Level Control/Status Register 4	ICSR4	16	8, 16	2 or 3 PCLKB
0008 C4D8h	POE	Input Level Control/Status Register 5	ICSR5	16	8, 16	2 or 3 PCLKB
0008 C4DAh	POE	Active Level Setting Register 1	ALR1	16	8, 16	2 or 3 PCLKB
0008 C4DCh	POE	Input Level Control/Status Register 6	ICSR6	16	16	2 or 3 PCLKB
0008 C4DEh	POE	Active Level Setting Register 2	ALR2	16	8, 16	2 or 3 PCLKB
0008 C4E0h	POE	Input Level Control/Status Register 7	ICSR7	16	8, 16	2 or 3 PCLKB
0008 C4E2h	POE	Port Output Enable Control Register 7	POECR7	16	16	2 or 3 PCLKB
0008 C4E4h	POE	Port Output Enable Control Register 8	POECR8	16	16	2 or 3 PCLKB
0008 C4E6h	POE	Port Output Enable Comparator Output Detection Flag Register	POECMPFR	16	16	2 or 3 PCLKB
0008 C4E8h	POE	Port Output Enable Comparator Request Select Register	POECMPSEL	16	16	2 or 3 PCLKB
0008 C4EAh	POE	Output Level Control/Status Register 3	OCSR3	16	8, 16	2 or 3 PCLKB
0008 C4ECh	POE	Active Level Setting Register 3	ALR3	16	8, 16	2 or 3 PCLKB
0008 C4F0h	POE	Port Mode Mask Control Register 0	PMMCR0	8	8	2 or 3 PCLKB

Table 4.1 List of I/O Registers (Address Order) (23/40)

Address	Module Symbol	Register Name	Register Symbol	Number of Bits	Access Size	Number of Access Cycles ICLK ≥ PCLK
0008 C4F2h	POE	Port Mode Mask Control Register 1	PMMCR1	16	16	2 or 3 PCLKB
0008 C4F4h	POE	Port Mode Mask Control Register 2	PMMCR2	16	16	2 or 3 PCLKB
0008 C4F6h	POE	Port Mode Mask Control Register 3	PMMCR3	16	16	2 or 3 PCLKB
0008 C4F8h	POE	Port Output Enable Comparator Request Extended Selection Register 0	POECMPEX0	8	8	2 or 3 PCLKB
0008 C4F9h	POE	Port Output Enable Comparator Request Extended Selection Register 1	POECMPEX1	8	8	2 or 3 PCLKB
0008 C4FAh	POE	Port Output Enable Comparator Request Extended Selection Register 2	POECMPEX2	8	8	2 or 3 PCLKB
0008 C4FBh	POE	Port Output Enable Comparator Request Extended Selection Register 3	POECMPEX3	8	8	2 or 3 PCLKB
0008 C4FCh	POE	Port Output Enable Comparator Request Extended Selection Register 4	POECMPEX4	8	8	2 or 3 PCLKB
0008 C4FDh	POE	Port Output Enable Comparator Request Extended Selection Register 5	POECMPEX5	8	8	2 or 3 PCLKB
000A 0C80h	CMPC0	Comparator Control Register 0	CMPCTL	8	8	1 or 2 PCLKB
000A 0C84h	CMPC0	Comparator Input Select Register 0	CMPSEL0	8	8	1 or 2 PCLKB
000A 0C88h	CMPC0	Comparator Reference Voltage Select Register 0	CMPSEL1	8	8	1 or 2 PCLKB
000A 0C8Ch	CMPC0	Comparator Output Monitor Register 0	CMPMON	8	8	1 or 2 PCLKB
000A 0C90h	CMPC0	Comparator External Output Enable Register 0	CMPIOC	8	8	1 or 2 PCLKB
000A 0CA0h	CMPC1	Comparator Control Register 1	CMPCTL	8	8	1 or 2 PCLKB
000A 0CA4h	CMPC1	Comparator Input Select Register 1	CMPSEL0	8	8	1 or 2 PCLKB
000A 0CA8h	CMPC1	Comparator Reference Voltage Select Register 1	CMPSEL1	8	8	1 or 2 PCLKB
000A 0CACh	CMPC1	Comparator Output Monitor Register 1	CMPMON	8	8	1 or 2 PCLKB
000A 0CB0h	CMPC1	Comparator External Output Enable Register 1	CMPIOC	8	8	1 or 2 PCLKB
000A 0CC0h	CMPC2	Comparator Control Register 2	CMPCTL	8	8	1 or 2 PCLKB
000A 0CC4h	CMPC2	Comparator Input Select Register 2	CMPSEL0	8	8	1 or 2 PCLKB
000A 0CC8h	CMPC2	Comparator Reference Voltage Select Register 2	CMPSEL1	8	8	1 or 2 PCLKB
000A 0CCCh	CMPC2	Comparator Output Monitor Register 2	CMPMON	8	8	1 or 2 PCLKB
000A 0CD0h	CMPC2	Comparator External Output Enable Register 2	CMPIOC	8	8	1 or 2 PCLKB
000A 0CE0h	CMPC3	Comparator Control Register 3	CMPCTL	8	8	1 or 2 PCLKB
000A 0CE4h	CMPC3	Comparator Input Select Register 3	CMPSEL0	8	8	1 or 2 PCLKB
000A 0CE8h	CMPC3	Comparator Reference Voltage Select Register 3	CMPSEL1	8	8	1 or 2 PCLKB
000A 0CECh	CMPC3	Comparator Output Monitor Register 3	CMPMON	8	8	1 or 2 PCLKB
000A 0CF0h	CMPC3	Comparator External Output Enable Register 3	CMPIOC	8	8	1 or 2 PCLKB
000A 8300h	RSCAN0	Bit Configuration Register L	CFGL	16	16	2 or 3 PCLKB
000A 8302h	RSCAN0	Bit Configuration Register H	CFGH	16	16	2 or 3 PCLKB
000A 8304h	RSCAN0	Control Register L	CTRL	16	16	2 or 3 PCLKB
000A 8306h	RSCAN0	Control Register H	CTRH	16	16	2 or 3 PCLKB
000A 8308h	RSCAN0	Status Register L	STSL	16	16	2 or 3 PCLKB
000A 830Ah	RSCAN0	Status Register H	STSH	16	16	2 or 3 PCLKB
000A 830Ch	RSCAN0	Error Flag Register L	ERFLL	16	16	2 or 3 PCLKB
000A 830Eh	RSCAN0	Error Flag Register H	ERFLH	16	16	2 or 3 PCLKB
000A 8322h	RSCAN	Global Configuration Register L	GCFGL	16	16	2 or 3 PCLKB
000A 8324h	RSCAN	Global Configuration Register H	GCFGH	16	16	2 or 3 PCLKB
000A 8326h	RSCAN	Global Control Register L	GCTRL	16	16	2 or 3 PCLKB
000A 8328h	RSCAN	Global Control Register H	GCTRH	16	16	2 or 3 PCLKB
000A 832Ah	RSCAN	Global Status Register	GSTS	16	16	2 or 3 PCLKB
000A 832Ch	RSCAN	Global Error Flag Register	GERFLL	8	8	1 or 2 PCLKB
000A 832Eh	RSCAN	Timestamp Register	GTSC	16	16	2 or 3 PCLKB
000A 8330h	RSCAN	Receive Rule Number Configuration Register	GAFLCFG	16	16	2 or 3 PCLKB
000A 8332h	RSCAN	Receive Buffer Number Configuration Register	RMNB	16	16	2 or 3 PCLKB
000A 8334h	RSCAN	Receive Buffer Receive Complete Flag Register	RMND0	16	16	2 or 3 PCLKB
000A 8338h	RSCAN	Receive FIFO Control Register 0	RFCC0	16	16	2 or 3 PCLKB

Table 4.1 List of I/O Registers (Address Order) (24/40)

Address	Module Symbol	Register Name	Register Symbol	Number of Bits	Access Size	Number of Access Cycles ICLK ≥ PCLK
000A 833Ah	RSCAN	Receive FIFO Control Register 1	RFCC1	16	16	2 or 3 PCLKB
000A 8340h	RSCAN	Receive FIFO Status Register 0	RFSTS0	16	16	2 or 3 PCLKB
000A 8342h	RSCAN	Receive FIFO Status Register 1	RFSTS1	16	16	2 or 3 PCLKB
000A 8348h	RSCAN	Receive FIFO Pointer Control Register 0	RFPCTR0	16	16	2 or 3 PCLKB
000A 834Ah	RSCAN	Receive FIFO Pointer Control Register 1	RFPCTR1	16	16	2 or 3 PCLKB
000A 8350h	RSCAN0	Transmit/Receive FIFO Control Register 0L	CFCCL0	16	16	2 or 3 PCLKB
000A 8352h	RSCAN0	Transmit/Receive FIFO Control Register 0H	CFCCH0	16	16	2 or 3 PCLKB
000A 8358h	RSCAN0	Transmit/Receive FIFO Status Register 0	CFSTS0	16	16	2 or 3 PCLKB
000A 835Ch	RSCAN0	Transmit/Receive FIFO Pointer Control Register 0	CFPCTR0	16	16	2 or 3 PCLKB
000A 8360h	RSCAN	Receive FIFO Message Lost Status Register	RFMSTS	8	8	1 or 2 PCLKB
000A 8361h	RSCAN0	Transmit/Receive FIFO Message Lost Status Register	CFMSTS	8	8	1 or 2 PCLKB
000A 8362h	RSCAN	Receive FIFO Interrupt Status Register	RFISTS	8	8	1 or 2 PCLKB
000A 8363h	RSCAN	Transmit/Receive FIFO Receive Interrupt Status Register	CFISTS	8	8	1 or 2 PCLKB
000A 8364h	RSCAN0	Transmit Buffer Control Register 0	TMC0	8	8	1 or 2 PCLKB
000A 8365h	RSCAN0	Transmit Buffer Control Register 1	TMC1	8	8	1 or 2 PCLKB
000A 8366h	RSCAN0	Transmit Buffer Control Register 2	TMC2	8	8	1 or 2 PCLKB
000A 8367h	RSCAN0	Transmit Buffer Control Register 3	TMC3	8	8	1 or 2 PCLKB
000A 836Ch	RSCAN0	Transmit Buffer Status Register 0	TMSTS0	8	8	1 or 2 PCLKB
000A 836Dh	RSCAN0	Transmit Buffer Status Register 1	TMSTS1	8	8	1 or 2 PCLKB
000A 836Eh	RSCAN0	Transmit Buffer Status Register 2	TMSTS2	8	8	1 or 2 PCLKB
000A 836Fh	RSCAN0	Transmit Buffer Status Register 3	TMSTS3	8	8	1 or 2 PCLKB
000A 8374h	RSCAN0	Transmit Buffer Transmit Request Status Register	TMTRSTS	16	16	2 or 3 PCLKB
000A 8376h	RSCAN0	Transmit Buffer Transmit Complete Status Register	TMTCSTS	16	16	2 or 3 PCLKB
000A 8378h	RSCAN0	Transmit Buffer Transmit Abort Status Register	TMTASTS	16	16	2 or 3 PCLKB
000A 837Ah	RSCAN0	Transmit Buffer Interrupt Enable Register	TMIEC	16	16	2 or 3 PCLKB
000A 837Ch	RSCAN0	Transmit History Buffer Control Register	THLCC0	16	16	2 or 3 PCLKB
000A 8380h	RSCAN0	Transmit History Buffer Status Register	THLSTS0	16	16	2 or 3 PCLKB
000A 8384h	RSCAN0	Transmit History Buffer Pointer Control Register	THLPCTR0	16	16	2 or 3 PCLKB
000A 8388h	RSCAN	Global Transmit Interrupt Status Register	GTINTSTS	16	16	2 or 3 PCLKB
000A 838Ah	RSCAN	Global RAM Window Control Register	GRWCR	16	16	2 or 3 PCLKB
000A 838Ch	RSCAN	Global Test Configuration Register	GTSTCFG	16	16	2 or 3 PCLKB
000A 838Eh	RSCAN	Global Test Control Register	GTSTCTRL	8	8	1 or 2 PCLKB
000A 8394h	RSCAN	Global Test Protection Unlock Register	GLOCKK	16	16	2 or 3 PCLKB
000A 83A0h	RSCAN	Receive Rule Entry Register 0AL	GAFLIDL0	16	16	2 or 3 PCLKB
000A 83A0h	RSCAN	Receive Buffer Register 0AL	RMIDL0	16	16	2 or 3 PCLKB
000A 83A2h	RSCAN	Receive Rule Entry Register 0AH	GAFLIDH0	16	16	2 or 3 PCLKB
000A 83A2h	RSCAN	Receive Buffer Register 0AH	RMIDH0	16	16	2 or 3 PCLKB
000A 83A4h	RSCAN	Receive Rule Entry Register 0BL	GAFLML0	16	16	2 or 3 PCLKB
000A 83A4h	RSCAN	Receive Buffer Register 0BL	RMTS0	16	16	2 or 3 PCLKB
000A 83A6h	RSCAN	Receive Rule Entry Register 0BH	GAFLMH0	16	16	2 or 3 PCLKB
000A 83A6h	RSCAN	Receive Buffer Register 0BH	RMPTR0	16	16	2 or 3 PCLKB
000A 83A8h	RSCAN	Receive Rule Entry Register 0CL	GAFLPL0	16	16	2 or 3 PCLKB
000A 83A8h	RSCAN	Receive Buffer Register 0CL	RMDF00	16	16	2 or 3 PCLKB
000A 83AAh	RSCAN	Receive Rule Entry Register 0CH	GAFLPH0	16	16	2 or 3 PCLKB
000A 83AAh	RSCAN	Receive Buffer Register 0CH	RMDF10	16	16	2 or 3 PCLKB
000A 83ACh	RSCAN	Receive Rule Entry Register 1AL	GAFLIDL1	16	16	2 or 3 PCLKB
000A 83ACh	RSCAN	Receive Buffer Register 0DL	RMDF20	16	16	2 or 3 PCLKB
000A 83AEh	RSCAN	Receive Rule Entry Register 1AH	GAFLIDH1	16	16	2 or 3 PCLKB
000A 83AEh	RSCAN	Receive Buffer Register 0DH	RMDF30	16	16	2 or 3 PCLKB
000A 83B0h	RSCAN	Receive Rule Entry Register 1BL	GAFLML1	16	16	2 or 3 PCLKB
000A 83B0h	RSCAN	Receive Buffer Register 1AL	RMIDL1	16	16	2 or 3 PCLKB
000A 83B2h	RSCAN	Receive Rule Entry Register 1BH	GAFLMH1	16	16	2 or 3 PCLKB

Table 4.1 List of I/O Registers (Address Order) (25/40)

Address	Module Symbol	Register Name	Register Symbol	Number of Bits	Access Size	Number of Access Cycles ICLK ≥ PCLK
000A 83B2h	RSCAN	Receive Buffer Register 1AH	RMIDH1	16	16	2 or 3 PCLKB
000A 83B4h	RSCAN	Receive Rule Entry Register 1CL	GAFLPL1	16	16	2 or 3 PCLKB
000A 83B4h	RSCAN	Receive Buffer Register 1BL	RMTS1	16	16	2 or 3 PCLKB
000A 83B6h	RSCAN	Receive Rule Entry Register 1CH	GAFLPH1	16	16	2 or 3 PCLKB
000A 83B6h	RSCAN	Receive Buffer Register 1BH	RMPTR1	16	16	2 or 3 PCLKB
000A 83B8h	RSCAN	Receive Rule Entry Register 2AL	GAFLIDL2	16	16	2 or 3 PCLKB
000A 83B8h	RSCAN	Receive Buffer Register 1CL	RMDF01	16	16	2 or 3 PCLKB
000A 83BAh	RSCAN	Receive Rule Entry Register 2AH	GAFLIDH2	16	16	2 or 3 PCLKB
000A 83BAh	RSCAN	Receive Buffer Register 1CH	RMDF11	16	16	2 or 3 PCLKB
000A 83BCh	RSCAN	Receive Rule Entry Register 2BL	GAFLML2	16	16	2 or 3 PCLKB
000A 83BCh	RSCAN	Receive Buffer Register 1DL	RMDF21	16	16	2 or 3 PCLKB
000A 83BEh	RSCAN	Receive Rule Entry Register 2BH	GAFLMH2	16	16	2 or 3 PCLKB
000A 83BEh	RSCAN	Receive Buffer Register 1DH	RMDF31	16	16	2 or 3 PCLKB
000A 83C0h	RSCAN	Receive Rule Entry Register 2CL	GAFLPL2	16	16	2 or 3 PCLKB
000A 83C0h	RSCAN	Receive Buffer Register 2AL	RMIDL2	16	16	2 or 3 PCLKB
000A 83C2h	RSCAN	Receive Rule Entry Register 2CH	GAFLPH2	16	16	2 or 3 PCLKB
000A 83C2h	RSCAN	Receive Buffer Register 2AH	RMIDH2	16	16	2 or 3 PCLKB
000A 83C4h	RSCAN	Receive Rule Entry Register 3AL	GAFLIDL3	16	16	2 or 3 PCLKB
000A 83C4h	RSCAN	Receive Buffer Register 2BL	RMTS2	16	16	2 or 3 PCLKB
000A 83C6h	RSCAN	Receive Rule Entry Register 3AH	GAFLIDH3	16	16	2 or 3 PCLKB
000A 83C6h	RSCAN	Receive Buffer Register 2BH	RMPTR2	16	16	2 or 3 PCLKB
000A 83C8h	RSCAN	Receive Rule Entry Register 3BL	GAFLML3	16	16	2 or 3 PCLKB
000A 83C8h	RSCAN	Receive Buffer Register 2CL	RMDF02	16	16	2 or 3 PCLKB
000A 83CAh	RSCAN	Receive Rule Entry Register 3BH	GAFLMH3	16	16	2 or 3 PCLKB
000A 83CAh	RSCAN	Receive Buffer Register 2CH	RMDF12	16	16	2 or 3 PCLKB
000A 83CCh	RSCAN	Receive Rule Entry Register 3CL	GAFLPL3	16	16	2 or 3 PCLKB
000A 83CCh	RSCAN	Receive Buffer Register 2DL	RMDF22	16	16	2 or 3 PCLKB
000A 83CEh	RSCAN	Receive Rule Entry Register 3CH	GAFLPH3	16	16	2 or 3 PCLKB
000A 83CEh	RSCAN	Receive Buffer Register 2DH	RMDF32	16	16	2 or 3 PCLKB
000A 83D0h	RSCAN	Receive Rule Entry Register 4AL	GAFLIDL4	16	16	2 or 3 PCLKB
000A 83D0h	RSCAN	Receive Buffer Register 3AL	RMIDL3	16	16	2 or 3 PCLKB
000A 83D2h	RSCAN	Receive Rule Entry Register 4AH	GAFLIDH4	16	16	2 or 3 PCLKB
000A 83D2h	RSCAN	Receive Buffer Register 3AH	RMIDH3	16	16	2 or 3 PCLKB
000A 83D4h	RSCAN	Receive Rule Entry Register 4BL	GAFLML4	16	16	2 or 3 PCLKB
000A 83D4h	RSCAN	Receive Buffer Register 3BL	RMTS3	16	16	2 or 3 PCLKB
000A 83D6h	RSCAN	Receive Rule Entry Register 4BH	GAFLMH4	16	16	2 or 3 PCLKB
000A 83D6h	RSCAN	Receive Buffer Register 3BH	RMPTR3	16	16	2 or 3 PCLKB
000A 83D8h	RSCAN	Receive Rule Entry Register 4CL	GAFLPL4	16	16	2 or 3 PCLKB
000A 83D8h	RSCAN	Receive Buffer Register 3CL	RMDF03	16	16	2 or 3 PCLKB
000A 83DAh	RSCAN	Receive Rule Entry Register 4CH	GAFLPH4	16	16	2 or 3 PCLKB
000A 83DAh	RSCAN	Receive Buffer Register 3CH	RMDF13	16	16	2 or 3 PCLKB
000A 83DCh	RSCAN	Receive Rule Entry Register 5AL	GAFLIDL5	16	16	2 or 3 PCLKB
000A 83DCh	RSCAN	Receive Buffer Register 3DL	RMDF23	16	16	2 or 3 PCLKB
000A 83DEh	RSCAN	Receive Rule Entry Register 5AH	GAFLIDH5	16	16	2 or 3 PCLKB
000A 83DEh	RSCAN	Receive Buffer Register 3DH	RMDF33	16	16	2 or 3 PCLKB
000A 83E0h	RSCAN	Receive Rule Entry Register 5BL	GAFLML5	16	16	2 or 3 PCLKB
000A 83E0h	RSCAN	Receive Buffer Register 4AL	RMIDL4	16	16	2 or 3 PCLKB
000A 83E2h	RSCAN	Receive Rule Entry Register 5BH	GAFLMH5	16	16	2 or 3 PCLKB
000A 83E2h	RSCAN	Receive Buffer Register 4AH	RMIDH4	16	16	2 or 3 PCLKB
000A 83E4h	RSCAN	Receive Rule Entry Register 5CL	GAFLPL5	16	16	2 or 3 PCLKB
000A 83E4h	RSCAN	Receive Buffer Register 4BL	RMTS4	16	16	2 or 3 PCLKB
000A 83E6h	RSCAN	Receive Rule Entry Register 5CH	GAFLPH5	16	16	2 or 3 PCLKB

Table 4.1 List of I/O Registers (Address Order) (26/40)

Address	Module Symbol	Register Name	Register Symbol	Number of Bits	Access Size	Number of Access Cycles ICLK ≥ PCLK
000A 83E6h	RSCAN	Receive Buffer Register 4BH	RMPTR4	16	16	2 or 3 PCLKB
000A 83E8h	RSCAN	Receive Rule Entry Register 6AL	GAFLIDL6	16	16	2 or 3 PCLKB
000A 83E8h	RSCAN	Receive Buffer Register 4CL	RMDF04	16	16	2 or 3 PCLKB
000A 83EAh	RSCAN	Receive Rule Entry Register 6AH	GAFLIDH6	16	16	2 or 3 PCLKB
000A 83EAh	RSCAN	Receive Buffer Register 4CH	RMDF14	16	16	2 or 3 PCLKB
000A 83ECh	RSCAN	Receive Rule Entry Register 6BL	GAFLML6	16	16	2 or 3 PCLKB
000A 83ECh	RSCAN	Receive Buffer Register 4DL	RMDF24	16	16	2 or 3 PCLKB
000A 83EEh	RSCAN	Receive Rule Entry Register 6BH	GAFLMH6	16	16	2 or 3 PCLKB
000A 83EEh	RSCAN	Receive Buffer Register 4DH	RMDF34	16	16	2 or 3 PCLKB
000A 83F0h	RSCAN	Receive Rule Entry Register 6CL	GAFLPL6	16	16	2 or 3 PCLKB
000A 83F0h	RSCAN	Receive Buffer Register 5AL	RMIDL5	16	16	2 or 3 PCLKB
000A 83F2h	RSCAN	Receive Rule Entry Register 6CH	GAFLPH6	16	16	2 or 3 PCLKB
000A 83F2h	RSCAN	Receive Buffer Register 5AH	RMIDH5	16	16	2 or 3 PCLKB
000A 83F4h	RSCAN	Receive Rule Entry Register 7AL	GAFLIDL7	16	16	2 or 3 PCLKB
000A 83F4h	RSCAN	Receive Buffer Register 5BL	RMTS5	16	16	2 or 3 PCLKB
000A 83F6h	RSCAN	Receive Rule Entry Register 7AH	GAFLIDH7	16	16	2 or 3 PCLKB
000A 83F6h	RSCAN	Receive Buffer Register 5BH	RMPTR5	16	16	2 or 3 PCLKB
000A 83F8h	RSCAN	Receive Rule Entry Register 7BL	GAFLML7	16	16	2 or 3 PCLKB
000A 83F8h	RSCAN	Receive Buffer Register 5CL	RMDF05	16	16	2 or 3 PCLKB
000A 83FAh	RSCAN	Receive Rule Entry Register 7BH	GAFLMH7	16	16	2 or 3 PCLKB
000A 83FAh	RSCAN	Receive Buffer Register 5CH	RMDF15	16	16	2 or 3 PCLKB
000A 83FCh	RSCAN	Receive Rule Entry Register 7CL	GAFLPL7	16	16	2 or 3 PCLKB
000A 83FCh	RSCAN	Receive Buffer Register 5DL	RMDF25	16	16	2 or 3 PCLKB
000A 83FEh	RSCAN	Receive Rule Entry Register 7CH	GAFLPH7	16	16	2 or 3 PCLKB
000A 83FEh	RSCAN	Receive Buffer Register 5DH	RMDF35	16	16	2 or 3 PCLKB
000A 8400h	RSCAN	Receive Rule Entry Register 8AL	GAFLIDL8	16	16	2 or 3 PCLKB
000A 8400h	RSCAN	Receive Buffer Register 6AL	RMIDL6	16	16	2 or 3 PCLKB
000A 8402h	RSCAN	Receive Rule Entry Register 8AH	GAFLIDH8	16	16	2 or 3 PCLKB
000A 8402h	RSCAN	Receive Buffer Register 6AH	RMIDH6	16	16	2 or 3 PCLKB
000A 8404h	RSCAN	Receive Rule Entry Register 8BL	GAFLML8	16	16	2 or 3 PCLKB
000A 8404h	RSCAN	Receive Buffer Register 6BL	RMTS6	16	16	2 or 3 PCLKB
000A 8406h	RSCAN	Receive Rule Entry Register 8BH	GAFLMH8	16	16	2 or 3 PCLKB
000A 8406h	RSCAN	Receive Buffer Register 6BH	RMPTR6	16	16	2 or 3 PCLKB
000A 8408h	RSCAN	Receive Rule Entry Register 8CL	GAFLPL8	16	16	2 or 3 PCLKB
000A 8408h	RSCAN	Receive Buffer Register 6CL	RMDF06	16	16	2 or 3 PCLKB
000A 840Ah	RSCAN	Receive Rule Entry Register 8CH	GAFLPH8	16	16	2 or 3 PCLKB
000A 840Ah	RSCAN	Receive Buffer Register 6CH	RMDF16	16	16	2 or 3 PCLKB
000A 840Ch	RSCAN	Receive Rule Entry Register 9AL	GAFLIDL9	16	16	2 or 3 PCLKB
000A 840Ch	RSCAN	Receive Buffer Register 6DL	RMDF26	16	16	2 or 3 PCLKB
000A 840Eh	RSCAN	Receive Rule Entry Register 9AH	GAFLIDH9	16	16	2 or 3 PCLKB
000A 840Eh	RSCAN	Receive Buffer Register 6DH	RMDF36	16	16	2 or 3 PCLKB
000A 8410h	RSCAN	Receive Rule Entry Register 9BL	GAFLML9	16	16	2 or 3 PCLKB
000A 8410h	RSCAN	Receive Buffer Register 7AL	RMIDL7	16	16	2 or 3 PCLKB
000A 8412h	RSCAN	Receive Rule Entry Register 9BH	GAFLMH9	16	16	2 or 3 PCLKB
000A 8412h	RSCAN	Receive Buffer Register 7AH	RMIDH7	16	16	2 or 3 PCLKB
000A 8414h	RSCAN	Receive Rule Entry Register 9CL	GAFLPL9	16	16	2 or 3 PCLKB
000A 8414h	RSCAN	Receive Buffer Register 7BL	RMTS7	16	16	2 or 3 PCLKB
000A 8416h	RSCAN	Receive Rule Entry Register 9CH	GAFLPH9	16	16	2 or 3 PCLKB
000A 8416h	RSCAN	Receive Buffer Register 7BH	RMPTR7	16	16	2 or 3 PCLKB
000A 8418h	RSCAN	Receive Rule Entry Register 10AL	GAFLIDL10	16	16	2 or 3 PCLKB
000A 8418h	RSCAN	Receive Buffer Register 7CL	RMDF07	16	16	2 or 3 PCLKB
000A 841Ah	RSCAN	Receive Rule Entry Register 10AH	GAFLIDH10	16	16	2 or 3 PCLKB

Table 4.1 List of I/O Registers (Address Order) (27/40)

Address	Module Symbol	Register Name	Register Symbol	Number of Bits	Access Size	Number of Access Cycles ICLK ≥ PCLK
000A 841Ah	RSCAN	Receive Buffer Register 7CH	RMDF17	16	16	2 or 3 PCLKB
000A 841Ch	RSCAN	Receive Rule Entry Register 10BL	GAFLML10	16	16	2 or 3 PCLKB
000A 841Ch	RSCAN	Receive Buffer Register 7DL	RMDF27	16	16	2 or 3 PCLKB
000A 841Eh	RSCAN	Receive Rule Entry Register 10BH	GAFLMH10	16	16	2 or 3 PCLKB
000A 841Eh	RSCAN	Receive Buffer Register 7DH	RMDF37	16	16	2 or 3 PCLKB
000A 8420h	RSCAN	Receive Rule Entry Register 10CL	GAFLPL10	16	16	2 or 3 PCLKB
000A 8420h	RSCAN	Receive Buffer Register 8AL	RMIDL8	16	16	2 or 3 PCLKB
000A 8422h	RSCAN	Receive Rule Entry Register 10CH	GAFLPH10	16	16	2 or 3 PCLKB
000A 8422h	RSCAN	Receive Buffer Register 8AH	RMIDH8	16	16	2 or 3 PCLKB
000A 8424h	RSCAN	Receive Rule Entry Register 11AL	GAFLIDL11	16	16	2 or 3 PCLKB
000A 8424h	RSCAN	Receive Buffer Register 8BL	RMTS8	16	16	2 or 3 PCLKB
000A 8426h	RSCAN	Receive Rule Entry Register 11AH	GAFLIDH11	16	16	2 or 3 PCLKB
000A 8426h	RSCAN	Receive Buffer Register 8BH	RMPTR8	16	16	2 or 3 PCLKB
000A 8428h	RSCAN	Receive Rule Entry Register 11BL	GAFLML11	16	16	2 or 3 PCLKB
000A 8428h	RSCAN	Receive Buffer Register 8CL	RMDF08	16	16	2 or 3 PCLKB
000A 842Ah	RSCAN	Receive Rule Entry Register 11BH	GAFLMH11	16	16	2 or 3 PCLKB
000A 842Ah	RSCAN	Receive Buffer Register 8CH	RMDF18	16	16	2 or 3 PCLKB
000A 842Ch	RSCAN	Receive Rule Entry Register 11CL	GAFLPL11	16	16	2 or 3 PCLKB
000A 842Ch	RSCAN	Receive Buffer Register 8DL	RMDF28	16	16	2 or 3 PCLKB
000A 842Eh	RSCAN	Receive Rule Entry Register 11CH	GAFLPH11	16	16	2 or 3 PCLKB
000A 842Eh	RSCAN	Receive Buffer Register 8DH	RMDF38	16	16	2 or 3 PCLKB
000A 8430h	RSCAN	Receive Rule Entry Register 12AL	GAFLIDL12	16	16	2 or 3 PCLKB
000A 8430h	RSCAN	Receive Buffer Register 9AL	RMIDL9	16	16	2 or 3 PCLKB
000A 8432h	RSCAN	Receive Rule Entry Register 12AH	GAFLIDH12	16	16	2 or 3 PCLKB
000A 8432h	RSCAN	Receive Buffer Register 9AH	RMIDH9	16	16	2 or 3 PCLKB
000A 8434h	RSCAN	Receive Rule Entry Register 12BL	GAFLML12	16	16	2 or 3 PCLKB
000A 8434h	RSCAN	Receive Buffer Register 9BL	RMTS9	16	16	2 or 3 PCLKB
000A 8436h	RSCAN	Receive Rule Entry Register 12BH	GAFLMH12	16	16	2 or 3 PCLKB
000A 8436h	RSCAN	Receive Buffer Register 9BH	RMPTR9	16	16	2 or 3 PCLKB
000A 8438h	RSCAN	Receive Rule Entry Register 12CL	GAFLPL12	16	16	2 or 3 PCLKB
000A 8438h	RSCAN	Receive Buffer Register 9CL	RMDF09	16	16	2 or 3 PCLKB
000A 843Ah	RSCAN	Receive Rule Entry Register 12CH	GAFLPH12	16	16	2 or 3 PCLKB
000A 843Ah	RSCAN	Receive Buffer Register 9CH	RMDF19	16	16	2 or 3 PCLKB
000A 843Ch	RSCAN	Receive Rule Entry Register 13AL	GAFLIDL13	16	16	2 or 3 PCLKB
000A 843Ch	RSCAN	Receive Buffer Register 9DL	RMDF29	16	16	2 or 3 PCLKB
000A 843Eh	RSCAN	Receive Rule Entry Register 13AH	GAFLIDH13	16	16	2 or 3 PCLKB
000A 843Eh	RSCAN	Receive Buffer Register 9DH	RMDF39	16	16	2 or 3 PCLKB
000A 8440h	RSCAN	Receive Rule Entry Register 13BL	GAFLML13	16	16	2 or 3 PCLKB
000A 8440h	RSCAN	Receive Buffer Register 10AL	RMIDL10	16	16	2 or 3 PCLKB
000A 8442h	RSCAN	Receive Rule Entry Register 13BH	GAFLMH13	16	16	2 or 3 PCLKB
000A 8442h	RSCAN	Receive Buffer Register 10AH	RMIDH10	16	16	2 or 3 PCLKB
000A 8444h	RSCAN	Receive Rule Entry Register 13CL	GAFLPL13	16	16	2 or 3 PCLKB
000A 8444h	RSCAN	Receive Buffer Register 10BL	RMTS10	16	16	2 or 3 PCLKB
000A 8446h	RSCAN	Receive Rule Entry Register 13CH	GAFLPH13	16	16	2 or 3 PCLKB
000A 8446h	RSCAN	Receive Buffer Register 10BH	RMPTR10	16	16	2 or 3 PCLKB
000A 8448h	RSCAN	Receive Rule Entry Register 14AL	GAFLIDL14	16	16	2 or 3 PCLKB
000A 8448h	RSCAN	Receive Buffer Register 10CL	RMDF010	16	16	2 or 3 PCLKB
000A 844Ah	RSCAN	Receive Rule Entry Register 14AH	GAFLIDH14	16	16	2 or 3 PCLKB
000A 844Ah	RSCAN	Receive Buffer Register 10CH	RMDF110	16	16	2 or 3 PCLKB
000A 844Ch	RSCAN	Receive Rule Entry Register 14BL	GAFLML14	16	16	2 or 3 PCLKB
000A 844Ch	RSCAN	Receive Buffer Register 10DL	RMDF210	16	16	2 or 3 PCLKB
000A 844Eh	RSCAN	Receive Rule Entry Register 14BH	GAFLMH14	16	16	2 or 3 PCLKB

Table 4.1 List of I/O Registers (Address Order) (28/40)

Address	Module Symbol	Register Name	Register Symbol	Number of Bits	Access Size	Number of Access Cycles ICLK ≥ PCLK
000A 844Eh	RSCAN	Receive Buffer Register 10DH	RMDF310	16	16	2 or 3 PCLKB
000A 8450h	RSCAN	Receive Rule Entry Register 14CL	GAFLPL14	16	16	2 or 3 PCLKB
000A 8450h	RSCAN	Receive Buffer Register 11AL	RMIDL11	16	16	2 or 3 PCLKB
000A 8452h	RSCAN	Receive Rule Entry Register 14CH	GAFLPH14	16	16	2 or 3 PCLKB
000A 8452h	RSCAN	Receive Buffer Register 11AH	RMIDH11	16	16	2 or 3 PCLKB
000A 8454h	RSCAN	Receive Rule Entry Register 15AL	GAFLIDL15	16	16	2 or 3 PCLKB
000A 8454h	RSCAN	Receive Buffer Register 11BL	RMTS11	16	16	2 or 3 PCLKB
000A 8456h	RSCAN	Receive Rule Entry Register 15AH	GAFLIDH15	16	16	2 or 3 PCLKB
000A 8456h	RSCAN	Receive Buffer Register 11BH	RMPTR11	16	16	2 or 3 PCLKB
000A 8458h	RSCAN	Receive Rule Entry Register 15BL	GAFLML15	16	16	2 or 3 PCLKB
000A 8458h	RSCAN	Receive Buffer Register 11CL	RMDF011	16	16	2 or 3 PCLKB
000A 845Ah	RSCAN	Receive Rule Entry Register 15BH	GAFLMH15	16	16	2 or 3 PCLKB
000A 845Ah	RSCAN	Receive Buffer Register 11CH	RMDF111	16	16	2 or 3 PCLKB
000A 845Ch	RSCAN	Receive Rule Entry Register 15CL	GAFLPL15	16	16	2 or 3 PCLKB
000A 845Ch	RSCAN	Receive Buffer Register 11DL	RMDF211	16	16	2 or 3 PCLKB
000A 845Eh	RSCAN	Receive Rule Entry Register 15CH	GAFLPH15	16	16	2 or 3 PCLKB
000A 845Eh	RSCAN	Receive Buffer Register 11DH	RMDF311	16	16	2 or 3 PCLKB
000A 8460h	RSCAN	Receive Buffer Register 12AL	RMIDL12	16	16	2 or 3 PCLKB
000A 8462h	RSCAN	Receive Buffer Register 12AH	RMIDH12	16	16	2 or 3 PCLKB
000A 8464h	RSCAN	Receive Buffer Register 12BL	RMTS12	16	16	2 or 3 PCLKB
000A 8466h	RSCAN	Receive Buffer Register 12BH	RMPTR12	16	16	2 or 3 PCLKB
000A 8468h	RSCAN	Receive Buffer Register 12CL	RMDF012	16	16	2 or 3 PCLKB
000A 846Ah	RSCAN	Receive Buffer Register 12CH	RMDF112	16	16	2 or 3 PCLKB
000A 846Ch	RSCAN	Receive Buffer Register 12DL	RMDF212	16	16	2 or 3 PCLKB
000A 846Eh	RSCAN	Receive Buffer Register 12DH	RMDF312	16	16	2 or 3 PCLKB
000A 8470h	RSCAN	Receive Buffer Register 13AL	RMIDL13	16	16	2 or 3 PCLKB
000A 8472h	RSCAN	Receive Buffer Register 13AH	RMIDH13	16	16	2 or 3 PCLKB
000A 8474h	RSCAN	Receive Buffer Register 13BL	RMTS13	16	16	2 or 3 PCLKB
000A 8476h	RSCAN	Receive Buffer Register 13BH	RMPTR13	16	16	2 or 3 PCLKB
000A 8478h	RSCAN	Receive Buffer Register 13CL	RMDF013	16	16	2 or 3 PCLKB
000A 847Ah	RSCAN	Receive Buffer Register 13CH	RMDF113	16	16	2 or 3 PCLKB
000A 847Ch	RSCAN	Receive Buffer Register 13DL	RMDF213	16	16	2 or 3 PCLKB
000A 847Eh	RSCAN	Receive Buffer Register 13DH	RMDF313	16	16	2 or 3 PCLKB
000A 8480h	RSCAN	Receive Buffer Register 14AL	RMIDL14	16	16	2 or 3 PCLKB
000A 8482h	RSCAN	Receive Buffer Register 14AH	RMIDH14	16	16	2 or 3 PCLKB
000A 8484h	RSCAN	Receive Buffer Register 14BL	RMTS14	16	16	2 or 3 PCLKB
000A 8486h	RSCAN	Receive Buffer Register 14BH	RMPTR14	16	16	2 or 3 PCLKB
000A 8488h	RSCAN	Receive Buffer Register 14CL	RMDF014	16	16	2 or 3 PCLKB
000A 848Ah	RSCAN	Receive Buffer Register 14CH	RMDF114	16	16	2 or 3 PCLKB
000A 848Ch	RSCAN	Receive Buffer Register 14DL	RMDF214	16	16	2 or 3 PCLKB
000A 848Eh	RSCAN	Receive Buffer Register 14DH	RMDF314	16	16	2 or 3 PCLKB
000A 8490h	RSCAN	Receive Buffer Register 15AL	RMIDL15	16	16	2 or 3 PCLKB
000A 8492h	RSCAN	Receive Buffer Register 15AH	RMIDH15	16	16	2 or 3 PCLKB
000A 8494h	RSCAN	Receive Buffer Register 15BL	RMTS15	16	16	2 or 3 PCLKB
000A 8496h	RSCAN	Receive Buffer Register 15BH	RMPTR15	16	16	2 or 3 PCLKB
000A 8498h	RSCAN	Receive Buffer Register 15CL	RMDF015	16	16	2 or 3 PCLKB
000A 849Ah	RSCAN	Receive Buffer Register 15CH	RMDF115	16	16	2 or 3 PCLKB
000A 849Ch	RSCAN	Receive Buffer Register 15DL	RMDF215	16	16	2 or 3 PCLKB
000A 849Eh	RSCAN	Receive Buffer Register 15DH	RMDF315	16	16	2 or 3 PCLKB
000A 8580h to 000A 859Fh	RSCAN	RAM Test Register 0 to 15	RPGACC0 to 15	16	16	2 or 3 PCLKB
000A 85A0h	RSCAN	Receive FIFO Access Register 0AL	RFIDL0	16	16	2 or 3 PCLKB

Table 4.1 List of I/O Registers (Address Order) (29/40)

Address	Module Symbol	Register Name	Register Symbol	Number of Bits	Access Size	Number of Access Cycles ICLK ≥ PCLK
000A 85A0h	RSCAN	RAM Test Register 16	RPGACC16	16	16	2 or 3 PCLKB
000A 85A2h	RSCAN	Receive FIFO Access Register 0AH	RFIDH0	16	16	2 or 3 PCLKB
000A 85A2h	RSCAN	RAM Test Register 17	RPGACC17	16	16	2 or 3 PCLKB
000A 85A4h	RSCAN	Receive FIFO Access Register 0BL	RFTS0	16	16	2 or 3 PCLKB
000A 85A4h	RSCAN	RAM Test Register 18	RPGACC18	16	16	2 or 3 PCLKB
000A 85A6h	RSCAN	Receive FIFO Access Register 0BH	RFPTR0	16	16	2 or 3 PCLKB
000A 85A6h	RSCAN	RAM Test Register 19	RPGACC19	16	16	2 or 3 PCLKB
000A 85A8h	RSCAN	Receive FIFO Access Register 0CL	RFDF00	16	16	2 or 3 PCLKB
000A 85A8h	RSCAN	RAM Test Register 20	RPGACC20	16	16	2 or 3 PCLKB
000A 85AAh	RSCAN	Receive FIFO Access Register 0CH	RFDF10	16	16	2 or 3 PCLKB
000A 85AAh	RSCAN	RAM Test Register 21	RPGACC21	16	16	2 or 3 PCLKB
000A 85ACh	RSCAN	Receive FIFO Access Register 0DL	RFDF20	16	16	2 or 3 PCLKB
000A 85ACh	RSCAN	RAM Test Register 22	RPGACC22	16	16	2 or 3 PCLKB
000A 85AEh	RSCAN	Receive FIFO Access Register 0DH	RFDF30	16	16	2 or 3 PCLKB
000A 85AEh	RSCAN	RAM Test Register 23	RPGACC23	16	16	2 or 3 PCLKB
000A 85B0h	RSCAN	Receive FIFO Access Register 1AL	RFIDL1	16	16	2 or 3 PCLKB
000A 85B0h	RSCAN	RAM Test Register 24	RPGACC24	16	16	2 or 3 PCLKB
000A 85B2h	RSCAN	Receive FIFO Access Register 1AH	RFIDH1	16	16	2 or 3 PCLKB
000A 85B2h	RSCAN	RAM Test Register 25	RPGACC25	16	16	2 or 3 PCLKB
000A 85B4h	RSCAN	Receive FIFO Access Register 1BL	RFTS1	16	16	2 or 3 PCLKB
000A 85B4h	RSCAN	RAM Test Register 26	RPGACC26	16	16	2 or 3 PCLKB
000A 85B6h	RSCAN	Receive FIFO Access Register 1BH	RFPTR1	16	16	2 or 3 PCLKB
000A 85B6h	RSCAN	RAM Test Register 27	RPGACC27	16	16	2 or 3 PCLKB
000A 85B8h	RSCAN	Receive FIFO Access Register 1CL	RFDF01	16	16	2 or 3 PCLKB
000A 85B8h	RSCAN	RAM Test Register 28	RPGACC28	16	16	2 or 3 PCLKB
000A 85BAh	RSCAN	Receive FIFO Access Register 1CH	RFDF11	16	16	2 or 3 PCLKB
000A 85BAh	RSCAN	RAM Test Register 29	RPGACC29	16	16	2 or 3 PCLKB
000A 85BCh	RSCAN	Receive FIFO Access Register 1DL	RFDF21	16	16	2 or 3 PCLKB
000A 85BCh	RSCAN	RAM Test Register 30	RPGACC30	16	16	2 or 3 PCLKB
000A 85BEh	RSCAN	Receive FIFO Access Register 1DH	RFDF31	16	16	2 or 3 PCLKB
000A 85BEh	RSCAN	RAM Test Register 31	RPGACC31	16	16	2 or 3 PCLKB
000A 85C0h to 000A 85DEh	RSCAN	RAM Test Register 32 to 47	RPGACC32 to 47	16	16	2 or 3 PCLKB
000A 85E0h	RSCAN0	Transmit/Receive FIFO Access Register 0AL	CFIDL0	16	16	2 or 3 PCLKB
000A 85E0h	RSCAN	RAM Test Register 48	RPGACC48	16	16	2 or 3 PCLKB
000A 85E2h	RSCAN0	Transmit/Receive FIFO Access Register 0AH	CFIDH0	16	16	2 or 3 PCLKB
000A 85E2h	RSCAN	RAM Test Register 49	RPGACC49	16	16	2 or 3 PCLKB
000A 85E4h	RSCAN0	Transmit/Receive FIFO Access Register 0BL	CFTS0	16	16	2 or 3 PCLKB
000A 85E4h	RSCAN	RAM Test Register 50	RPGACC50	16	16	2 or 3 PCLKB
000A 85E6h	RSCAN0	Transmit/Receive FIFO Access Register 0BH	CFPTR0	16	16	2 or 3 PCLKB
000A 85E6h	RSCAN	RAM Test Register 51	RPGACC51	16	16	2 or 3 PCLKB
000A 85E8h	RSCAN0	Transmit/Receive FIFO Access Register 0CL	CFDF00	16	16	2 or 3 PCLKB
000A 85E8h	RSCAN	RAM Test Register 52	RPGACC52	16	16	2 or 3 PCLKB
000A 85EAh	RSCAN0	Transmit/Receive FIFO Access Register 0CH	CFDF10	16	16	2 or 3 PCLKB
000A 85EAh	RSCAN	RAM Test Register 53	RPGACC53	16	16	2 or 3 PCLKB
000A 85ECh	RSCAN0	Transmit/Receive FIFO Access Register 0DL	CFDF20	16	16	2 or 3 PCLKB
000A 85ECh	RSCAN	RAM Test Register 54	RPGACC54	16	16	2 or 3 PCLKB
000A 85EEh	RSCAN0	Transmit/Receive FIFO Access Register 0DH	CFDF30	16	16	2 or 3 PCLKB
000A 85EEh	RSCAN	RAM Test Register 55	RPGACC55	16	16	2 or 3 PCLKB
000A 85F0h to 000A 85FEh	RSCAN	RAM Test Register 56 to 63	RPGACC56 to 63	16	16	2 or 3 PCLKB
000A 8600h	RSCAN0	Transmit Buffer Register 0AL	TMIDL0	16	16	2 or 3 PCLKB

Table 4.1 List of I/O Registers (Address Order) (30/40)

Address	Module Symbol	Register Name	Register Symbol	Number of Bits	Access Size	Number of Access Cycles ICLK ≥ PCLK
000A 8600h	RSCAN	RAM Test Register 64	RPGACC64	16	16	2 or 3 PCLKB
000A 8602h	RSCAN0	Transmit Buffer Register 0AH	TMIDH0	16	16	2 or 3 PCLKB
000A 8602h	RSCAN	RAM Test Register 65	RPGACC65	16	16	2 or 3 PCLKB
000A 8604h	RSCAN	RAM Test Register 66	RPGACC66	16	16	2 or 3 PCLKB
000A 8606h	RSCAN0	Transmit Buffer Register 0BH	TMPTR0	16	16	2 or 3 PCLKB
000A 8606h	RSCAN	RAM Test Register 67	RPGACC67	16	16	2 or 3 PCLKB
000A 8608h	RSCAN0	Transmit Buffer Register 0CL	TMDF00	16	16	2 or 3 PCLKB
000A 8608h	RSCAN	RAM Test Register 68	RPGACC68	16	16	2 or 3 PCLKB
000A 860Ah	RSCAN0	Transmit Buffer Register 0CH	TMDF10	16	16	2 or 3 PCLKB
000A 860Ah	RSCAN	RAM Test Register 69	RPGACC69	16	16	2 or 3 PCLKB
000A 860Ch	RSCAN0	Transmit Buffer Register 0DL	TMDF20	16	16	2 or 3 PCLKB
000A 860Ch	RSCAN	RAM Test Register 70	RPGACC70	16	16	2 or 3 PCLKB
000A 860Eh	RSCAN0	Transmit Buffer Register 0DH	TMDF30	16	16	2 or 3 PCLKB
000A 860Eh	RSCAN	RAM Test Register 71	RPGACC71	16	16	2 or 3 PCLKB
000A 8610h	RSCAN0	Transmit Buffer Register 1AL	TMIDL1	16	16	2 or 3 PCLKB
000A 8610h	RSCAN	RAM Test Register 72	RPGACC72	16	16	2 or 3 PCLKB
000A 8612h	RSCAN0	Transmit Buffer Register 1AH	TMIDH1	16	16	2 or 3 PCLKB
000A 8612h	RSCAN	RAM Test Register 73	RPGACC73	16	16	2 or 3 PCLKB
000A 8614h	RSCAN	RAM Test Register 74	RPGACC74	16	16	2 or 3 PCLKB
000A 8616h	RSCAN0	Transmit Buffer Register 1BH	TMPTR1	16	16	2 or 3 PCLKB
000A 8616h	RSCAN	RAM Test Register 75	RPGACC75	16	16	2 or 3 PCLKB
000A 8618h	RSCAN0	Transmit Buffer Register 1CL	TMDF01	16	16	2 or 3 PCLKB
000A 8618h	RSCAN	RAM Test Register 76	RPGACC76	16	16	2 or 3 PCLKB
000A 861Ah	RSCAN0	Transmit Buffer Register 1CH	TMDF11	16	16	2 or 3 PCLKB
000A 861Ah	RSCAN	RAM Test Register 77	RPGACC77	16	16	2 or 3 PCLKB
000A 861Ch	RSCAN0	Transmit Buffer Register 1DL	TMDF21	16	16	2 or 3 PCLKB
000A 861Ch	RSCAN	RAM Test Register 78	RPGACC78	16	16	2 or 3 PCLKB
000A 861Eh	RSCAN0	Transmit Buffer Register 1DH	TMDF31	16	16	2 or 3 PCLKB
000A 861Eh	RSCAN	RAM Test Register 79	RPGACC79	16	16	2 or 3 PCLKB
000A 8620h	RSCAN0	Transmit Buffer Register 2AL	TMIDL2	16	16	2 or 3 PCLKB
000A 8620h	RSCAN	RAM Test Register 80	RPGACC80	16	16	2 or 3 PCLKB
000A 8622h	RSCAN0	Transmit Buffer Register 2AH	TMIDH2	16	16	2 or 3 PCLKB
000A 8622h	RSCAN	RAM Test Register 81	RPGACC81	16	16	2 or 3 PCLKB
000A 8624h	RSCAN	RAM Test Register 82	RPGACC82	16	16	2 or 3 PCLKB
000A 8626h	RSCAN0	Transmit Buffer Register 2BH	TMPTR2	16	16	2 or 3 PCLKB
000A 8626h	RSCAN	RAM Test Register 83	RPGACC83	16	16	2 or 3 PCLKB
000A 8628h	RSCAN0	Transmit Buffer Register 2CL	TMDF02	16	16	2 or 3 PCLKB
000A 8628h	RSCAN	RAM Test Register 84	RPGACC84	16	16	2 or 3 PCLKB
000A 862Ah	RSCAN0	Transmit Buffer Register 2CH	TMDF12	16	16	2 or 3 PCLKB
000A 862Ah	RSCAN	RAM Test Register 85	RPGACC85	16	16	2 or 3 PCLKB
000A 862Ch	RSCAN0	Transmit Buffer Register 2DL	TMDF22	16	16	2 or 3 PCLKB
000A 862Ch	RSCAN	RAM Test Register 86	RPGACC86	16	16	2 or 3 PCLKB
000A 862Eh	RSCAN0	Transmit Buffer Register 2DH	TMDF32	16	16	2 or 3 PCLKB
000A 862Eh	RSCAN	RAM Test Register 87	RPGACC87	16	16	2 or 3 PCLKB
000A 8630h	RSCAN0	Transmit Buffer Register 3AL	TMIDL3	16	16	2 or 3 PCLKB
000A 8630h	RSCAN	RAM Test Register 88	RPGACC88	16	16	2 or 3 PCLKB
000A 8632h	RSCAN0	Transmit Buffer Register 3AH	TMIDH3	16	16	2 or 3 PCLKB
000A 8632h	RSCAN	RAM Test Register 89	RPGACC89	16	16	2 or 3 PCLKB
000A 8634h	RSCAN	RAM Test Register 90	RPGACC90	16	16	2 or 3 PCLKB
000A 8636h	RSCAN0	Transmit Buffer Register 3BH	TMPTR3	16	16	2 or 3 PCLKB
000A 8636h	RSCAN	RAM Test Register 91	RPGACC91	16	16	2 or 3 PCLKB
000A 8638h	RSCAN0	Transmit Buffer Register 3CL	TMDF03	16	16	2 or 3 PCLKB

Table 4.1 List of I/O Registers (Address Order) (31/40)

Address	Module Symbol	Register Name	Register Symbol	Number of Bits	Access Size	Number of Access Cycles ICLK ≥ PCLK
000A 8638h	RSCAN	RAM Test Register 92	RPGACC92	16	16	2 or 3 PCLKB
000A 863Ah	RSCAN0	Transmit Buffer Register 3CH	TMDF13	16	16	2 or 3 PCLKB
000A 863Ah	RSCAN	RAM Test Register 93	RPGACC93	16	16	2 or 3 PCLKB
000A 863Ch	RSCAN0	Transmit Buffer Register 3DL	TMDF23	16	16	2 or 3 PCLKB
000A 863Ch	RSCAN	RAM Test Register 94	RPGACC94	16	16	2 or 3 PCLKB
000A 863Eh	RSCAN0	Transmit Buffer Register 3DH	TMDF33	16	16	2 or 3 PCLKB
000A 863Eh	RSCAN	RAM Test Register 95	RPGACC95	16	16	2 or 3 PCLKB
000A 8640h to 000A 867Eh	RSCAN	RAM Test Register 96 to 127	RPGACC96 to 127	16	16	2 or 3 PCLKB
000A 8680h	RSCAN0	Transmit History Buffer Access Register	THLACC0	16	16	2 or 3 PCLKB
000C 1200h	MTU3	Timer Control Register	TCR	8	8, 16, 32	4 or 5 PCLKA
000C 1201h	MTU4	Timer Control Register	TCR	8	8	4 or 5 PCLKA
000C 1202h	MTU3	Timer Mode Register 1	TMDR1	8	8, 16	4 or 5 PCLKA
000C 1203h	MTU4	Timer Mode Register 1	TMDR1	8	8	4 or 5 PCLKA
000C 1204h	MTU3	Timer I/O Control Register H	TIORH	8	8, 16, 32	4 or 5 PCLKA
000C 1205h	MTU3	Timer I/O Control Register L	TIORL	8	8	4 or 5 PCLKA
000C 1206h	MTU4	Timer I/O Control Register H	TIORH	8	8, 16	4 or 5 PCLKA
000C 1207h	MTU4	Timer I/O Control Register L	TIORL	8	8	4 or 5 PCLKA
000C 1208h	MTU3	Timer Interrupt Enable Register	TIER	8	8, 16	4 or 5 PCLKA
000C 1209h	MTU4	Timer Interrupt Enable Register	TIER	8	8	4 or 5 PCLKA
000C 120Ah	MTU	Timer Output Master Enable Register A	TOERA	8	8	4 or 5 PCLKA
000C 120Dh	MTU	Timer Gate Control Register	TGCRA	8	8	4 or 5 PCLKA
000C 120Eh	MTU	Timer Output Control Register 1A	TOCR1A	8	8, 16	4 or 5 PCLKA
000C 120Fh	MTU	Timer Output Control Register 2A	TOCR2A	8	8	4 or 5 PCLKA
000C 1210h	MTU3	Timer Counter	TCNT	16	16, 32	4 or 5 PCLKA
000C 1212h	MTU4	Timer Counter	TCNT	16	16	4 or 5 PCLKA
000C 1214h	MTU	Timer Period Data Register A	TCDRA	16	16, 32	4 or 5 PCLKA
000C 1216h	MTU	Timer Dead Time Data Register A	TDDRA	16	16	4 or 5 PCLKA
000C 1218h	MTU3	Timer General Register A	TGRA	16	16, 32	4 or 5 PCLKA
000C 121Ah	MTU3	Timer General Register B	TGRB	16	16	4 or 5 PCLKA
000C 121Ch	MTU4	Timer General Register A	TGRA	16	16, 32	4 or 5 PCLKA
000C 121Eh	MTU4	Timer General Register B	TGRB	16	16	4 or 5 PCLKA
000C 1220h	MTU	Timer Subcounters A	TCNTSA	16	16, 32	4 or 5 PCLKA
000C 1222h	MTU	Timer Period Buffer Register A	TCBRA	16	16	4 or 5 PCLKA
000C 1224h	MTU3	Timer General Register C	TGRC	16	16, 32	4 or 5 PCLKA
000C 1226h	MTU3	Timer General Register D	TGRD	16	16	4 or 5 PCLKA
000C 1228h	MTU4	Timer General Register C	TGRC	16	16, 32	4 or 5 PCLKA
000C 122Ah	MTU4	Timer General Register D	TGRD	16	16	4 or 5 PCLKA
000C 122Ch	MTU3	Timer Status Register	TSR	8	8, 16	4 or 5 PCLKA
000C 122Dh	MTU4	Timer Status Register	TSR	8	8	4 or 5 PCLKA
000C 1230h	MTU	Timer Interrupt Skipping Set Register 1A	TITCR1A	8	8, 16	4 or 5 PCLKA
000C 1231h	MTU	Timer Interrupt Skipping Counters 1A	TITCNT1A	8	8	4 or 5 PCLKA
000C 1232h	MTU	Timer Buffer Transfer Set Register A	TBTERA	8	8	4 or 5 PCLKA
000C 1234h	MTU	Timer Dead Time Enable Register A	TDERA	8	8	4 or 5 PCLKA
000C 1236h	MTU	Timer Output Level Buffer Register A	TOLBRA	8	8	4 or 5 PCLKA
000C 1238h	MTU3	Timer Buffer Operation Transfer Mode Register	TBTM	8	8, 16	4 or 5 PCLKA
000C 1239h	MTU4	Timer Buffer Operation Transfer Mode Register	TBTM	8	8	4 or 5 PCLKA
000C 123Ah	MTU	Timer Interrupt Skipping Mode Register A	TITMRA	8	8	4 or 5 PCLKA
000C 123Bh	MTU	Timer Interrupt Skipping Set Register 2A	TITCR2A	8	8	4 or 5 PCLKA
000C 123Ch	MTU	Timer Interrupt Skipping Counters 2A	TITCNT2A	8	8	4 or 5 PCLKA
000C 1240h	MTU4	Timer A/D Converter Start Request Control Register	TADCR	16	16	4 or 5 PCLKA
000C 1244h	MTU4	Timer A/D Converter Start Request Cycle Set Register A	TADCORA	16	16, 32	4 or 5 PCLKA

Table 4.1 List of I/O Registers (Address Order) (32/40)

Address	Module Symbol	Register Name	Register Symbol	Number of Bits	Access Size	Number of Access Cycles ICLK ≥ PCLK
000C 1246h	MTU4	Timer A/D Converter Start Request Cycle Set Register B	TADCORB	16	16	4 or 5 PCLKA
000C 1248h	MTU4	Timer A/D Converter Start Request Cycle Set Buffer Register A	TADCOBRA	16	16, 32	4 or 5 PCLKA
000C 124Ah	MTU4	Timer A/D Converter Start Request Cycle Set Buffer Register B	TADCOBRB	16	16	4 or 5 PCLKA
000C 124Ch	MTU3	Timer Control Register 2	TCR2	8	8	4 or 5 PCLKA
000C 124Dh	MTU4	Timer Control Register 2	TCR2	8	8	4 or 5 PCLKA
000C 1260h	MTU	Timer Waveform Control Register A	TWCRA	8	8	4 or 5 PCLKA
000C 1270h	MTU	Timer Mode Register 2A	TMDR2A	8	8	4 or 5 PCLKA
000C 1272h	MTU3	Timer General Register E	TGRE	16	16	4 or 5 PCLKA
000C 1274h	MTU4	Timer General Register E	TGRE	16	16	4 or 5 PCLKA
000C 1276h	MTU4	Timer General Register F	TGRF	16	16	4 or 5 PCLKA
000C 1280h	MTU	Timer Start Register A	TSTRA	8	8, 16	4 or 5 PCLKA
000C 1281h	MTU	Timer Synchronous Register A	TSYRA	8	8	4 or 5 PCLKA
000C 1282h	MTU	Timer Counter Synchronous Start Register	TCSYSTR	8	8	4 or 5 PCLKA
000C 1284h	MTU	Timer Read/Write Enable Register A	TRWERA	8	8	4 or 5 PCLKA
000C 1290h	MTU0	Noise Filter Control Register 0	NFCR0	8	8	4 or 5 PCLKA
000C 1291h	MTU1	Noise Filter Control Register 1	NFCR1	8	8	4 or 5 PCLKA
000C 1292h	MTU2	Noise Filter Control Register 2	NFCR2	8	8	4 or 5 PCLKA
000C 1293h	MTU3	Noise Filter Control Register 3	NFCR3	8	8	4 or 5 PCLKA
000C 1294h	MTU4	Noise Filter Control Register 4	NFCR4	8	8	4 or 5 PCLKA
000C 1296h	MTU9	Noise Filter Control Register 9	NFCR9	8	8	4 or 5 PCLKA
000C 1299h	MTU0	Noise Filter Control Register C	NFCRC	8	8	4 or 5 PCLKA
000C 1300h	MTU0	Timer Control Register	TCR	8	8, 16, 32	4 or 5 PCLKA
000C 1301h	MTU0	Timer Mode Register 1	TMDR1	8	8	4 or 5 PCLKA
000C 1302h	MTU0	Timer I/O Control Register H	TIORH	8	8, 16	4 or 5 PCLKA
000C 1303h	MTU0	Timer I/O Control Register L	TIORL	8	8	4 or 5 PCLKA
000C 1304h	MTU0	Timer Interrupt Enable Register	TIER	8	8, 16, 32	4 or 5 PCLKA
000C 1306h	MTU0	Timer Counter	TCNT	16	16	4 or 5 PCLKA
000C 1308h	MTU0	Timer General Register A	TGRA	16	16, 32	4 or 5 PCLKA
000C 130Ah	MTU0	Timer General Register B	TGRB	16	16	4 or 5 PCLKA
000C 130Ch	MTU0	Timer General Register C	TGRC	16	16, 32	4 or 5 PCLKA
000C 130Eh	MTU0	Timer General Register D	TGRD	16	16	4 or 5 PCLKA
000C 1320h	MTU0	Timer General Register E	TGRE	16	16, 32	4 or 5 PCLKA
000C 1322h	MTU0	Timer General Register F	TGRF	16	16	4 or 5 PCLKA
000C 1324h	MTU0	Timer Interrupt Enable Register 2	TIER2	8	8, 16	4 or 5 PCLKA
000C 1326h	MTU0	Timer Buffer Operation Transfer Mode Register	TBTM	8	8	4 or 5 PCLKA
000C 1328h	MTU0	Timer Control Register 2	TCR2	8	8	4 or 5 PCLKA
000C 1380h	MTU1	Timer Control Register	TCR	8	8, 16	4 or 5 PCLKA
000C 1381h	MTU1	Timer Mode Register 1	TMDR1	8	8	4 or 5 PCLKA
000C 1382h	MTU1	Timer I/O Control Register	TIOR	8	8	4 or 5 PCLKA
000C 1384h	MTU1	Timer Interrupt Enable Register	TIER	8	8, 16, 32	4 or 5 PCLKA
000C 1385h	MTU1	Timer Status Register	TSR	8	8	4 or 5 PCLKA
000C 1386h	MTU1	Timer Counter	TCNT	16	16	4 or 5 PCLKA
000C 1388h	MTU1	Timer General Register A	TGRA	16	16, 32	4 or 5 PCLKA
000C 138Ah	MTU1	Timer General Register B	TGRB	16	16	4 or 5 PCLKA
000C 1390h	MTU1	Timer Input Capture Control Register	TICCR	8	8	4 or 5 PCLKA
000C 1391h	MTU1	Timer Mode Register 3	TMDR3	8	8	4 or 5 PCLKA
000C 1394h	MTU1	Timer Control Register 2	TCR2	8	8	4 or 5 PCLKA
000C 13A0h	MTU1	Timer Longword Counter	TCNTLW	32	32	4 or 5 PCLKA
000C 13A4h	MTU1	Timer Longword General Register	TGRALW	32	32	4 or 5 PCLKA
000C 13A8h	MTU1	Timer Longword General Register	TGRBLW	32	32	4 or 5 PCLKA
000C 1400h	MTU2	Timer Control Register	TCR	8	8, 16	4 or 5 PCLKA

Table 4.1 List of I/O Registers (Address Order) (33/40)

Address	Module Symbol	Register Name	Register Symbol	Number of Bits	Access Size	Number of Access Cycles ICLK ≥ PCLK
000C 1401h	MTU2	Timer Mode Register 1	TMDR1	8	8	4 or 5 PCLKA
000C 1402h	MTU2	Timer I/O Control Register	TIOR	8	8	4 or 5 PCLKA
000C 1404h	MTU2	Timer Interrupt Enable Register	TIER	8	8, 16, 32	4 or 5 PCLKA
000C 1405h	MTU2	Timer Status Register	TSR	8	8	4 or 5 PCLKA
000C 1406h	MTU2	Timer Counter	TCNT	16	16	4 or 5 PCLKA
000C 1408h	MTU2	Timer General Register A	TGRA	16	16, 32	4 or 5 PCLKA
000C 140Ah	MTU2	Timer General Register B	TGRB	16	16	4 or 5 PCLKA
000C 140Ch	MTU2	Timer Control Register 2	TCR2	8	8	4 or 5 PCLKA
000C 1580h	MTU9	Timer Control Register	TCR	8	8, 16, 32	4 or 5 PCLKA
000C 1581h	MTU9	Timer Mode Register 1	TMDR1	8	8	4 or 5 PCLKA
000C 1582h	MTU9	Timer I/O Control Register H	TIORH	8	8, 16	4 or 5 PCLKA
000C 1583h	MTU9	Timer I/O Control Register L	TIORL	8	8	4 or 5 PCLKA
000C 1584h	MTU9	Timer Interrupt Enable Register	TIER	8	8, 16, 32	4 or 5 PCLKA
000C 1586h	MTU9	Timer Counter	TCNT	16	16	4 or 5 PCLKA
000C 1588h	MTU9	Timer General Register A	TGRA	16	16, 32	4 or 5 PCLKA
000C 158Ah	MTU9	Timer General Register B	TGRB	16	16	4 or 5 PCLKA
000C 158Ch	MTU9	Timer General Register C	TGRC	16	16, 32	4 or 5 PCLKA
000C 158Eh	MTU9	Timer General Register D	TGRD	16	16	4 or 5 PCLKA
000C 15A0h	MTU9	Timer General Register E	TGRE	16	16, 32	4 or 5 PCLKA
000C 15A2h	MTU9	Timer General Register F	TGRF	16	16	4 or 5 PCLKA
000C 15A4h	MTU9	Timer Interrupt Enable Register 2	TIER2	8	8, 16	4 or 5 PCLKA
000C 15A6h	MTU9	Timer Buffer Operation Transfer Mode Register	TBTM	8	8	4 or 5 PCLKA
000C 15A8h	MTU9	Timer Control Register 2	TCR2	8	8	4 or 5 PCLKA
000C 1A00h	MTU6	Timer Control Register	TCR	8	8, 16, 32	4 or 5 PCLKA
000C 1A01h	MTU7	Timer Control Register	TCR	8	8	4 or 5 PCLKA
000C 1A02h	MTU6	Timer Mode Register 1	TMDR1	8	8, 16	4 or 5 PCLKA
000C 1A03h	MTU7	Timer Mode Register 1	TMDR1	8	8	4 or 5 PCLKA
000C 1A04h	MTU6	Timer I/O Control Register H	TIORH	8	8, 16, 32	4 or 5 PCLKA
000C 1A05h	MTU6	Timer I/O Control Register L	TIORL	8	8	4 or 5 PCLKA
000C 1A06h	MTU7	Timer I/O Control Register H	TIORH	8	8, 16	4 or 5 PCLKA
000C 1A07h	MTU7	Timer I/O Control Register L	TIORL	8	8	4 or 5 PCLKA
000C 1A08h	MTU6	Timer Interrupt Enable Register	TIER	8	8, 16	4 or 5 PCLKA
000C 1A09h	MTU7	Timer Interrupt Enable Register	TIER	8	8	4 or 5 PCLKA
000C 1A0Ah	MTU	Timer Output Master Enable Register B	TOERB	8	8	4 or 5 PCLKA
000C 1A0Dh	MTU	Timer Gate Control Register	TGCRB	8	8	4 or 5 PCLKA
000C 1A0Eh	MTU	Timer Output Control Register 1B	TOCR1B	8	8, 16	4 or 5 PCLKA
000C 1A0Fh	MTU	Timer Output Control Register 2B	TOCR2B	8	8	4 or 5 PCLKA
000C 1A10h	MTU6	Timer Counter	TCNT	16	16, 32	4 or 5 PCLKA
000C 1A12h	MTU7	Timer Counter	TCNT	16	16	4 or 5 PCLKA
000C 1A14h	MTU	Timer Period Data Register B	TCDRB	16	16, 32	4 or 5 PCLKA
000C 1A16h	MTU	Timer Dead Time Data Register B	TDDRB	16	16	4 or 5 PCLKA
000C 1A18h	MTU6	Timer General Register A	TGRA	16	16, 32	4 or 5 PCLKA
000C 1A1Ah	MTU6	Timer General Register B	TGRB	16	16	4 or 5 PCLKA
000C 1A1Ch	MTU7	Timer General Register A	TGRA	16	16, 32	4 or 5 PCLKA
000C 1A1Eh	MTU7	Timer General Register B	TGRB	16	16	4 or 5 PCLKA
000C 1A20h	MTU	Timer Subcounters B	TCNTSB	16	16, 32	4 or 5 PCLKA
000C 1A22h	MTU	Timer Period Buffer Register B	TCBRB	16	16	4 or 5 PCLKA
000C 1A24h	MTU6	Timer General Register C	TGRC	16	16, 32	4 or 5 PCLKA
000C 1A26h	MTU6	Timer General Register D	TGRD	16	16	4 or 5 PCLKA
000C 1A28h	MTU7	Timer General Register C	TGRC	16	16, 32	4 or 5 PCLKA
000C 1A2Ah	MTU7	Timer General Register D	TGRD	16	16	4 or 5 PCLKA
000C 1A2Ch	MTU6	Timer Status Register	TSR	8	8, 16	4 or 5 PCLKA

Table 4.1 List of I/O Registers (Address Order) (34/40)

Address	Module Symbol	Register Name	Register Symbol	Number of Bits	Access Size	Number of Access Cycles ICLK ≥ PCLK
000C 1A2Dh	MTU7	Timer Status Register	TSR	8	8	4 or 5 PCLKA
000C 1A30h	MTU	Timer Interrupt Skipping Set Register 1B	TITCR1B	8	8, 16	4 or 5 PCLKA
000C 1A31h	MTU	Timer Interrupt Skipping Counters 1B	TITCNT1B	8	8	4 or 5 PCLKA
000C 1A32h	MTU	Timer Buffer Transfer Set Register B	TBTERB	8	8	4 or 5 PCLKA
000C 1A34h	MTU	Timer Dead Time Enable Register B	TDERB	8	8	4 or 5 PCLKA
000C 1A36h	MTU	Timer Output Level Buffer Register B	TOLBRB	8	8	4 or 5 PCLKA
000C 1A38h	MTU6	Timer Buffer Operation Transfer Mode Register	TBTM	8	8, 16	4 or 5 PCLKA
000C 1A39h	MTU7	Timer Buffer Operation Transfer Mode Register	TBTM	8	8	4 or 5 PCLKA
000C 1A3Ah	MTU	Timer Interrupt Skipping Mode Register B	TITMRB	8	8	4 or 5 PCLKA
000C 1A3Bh	MTU	Timer Interrupt Skipping Set Register 2B	TITCR2B	8	8	4 or 5 PCLKA
000C 1A3Ch	MTU	Timer Interrupt Skipping Counters 2B	TITCNT2B	8	8	4 or 5 PCLKA
000C 1A40h	MTU7	Timer A/D Converter Start Request Control Register	TADCR	16	16	4 or 5 PCLKA
000C 1A44h	MTU7	Timer A/D Converter Start Request Cycle Set Register A	TADCORA	16	16, 32	4 or 5 PCLKA
000C 1A46h	MTU7	Timer A/D Converter Start Request Cycle Set Register B	TADCORB	16	16	4 or 5 PCLKA
000C 1A48h	MTU7	Timer A/D Converter Start Request Cycle Set Buffer Register A	TADCOBRA	16	16, 32	4 or 5 PCLKA
000C 1A4Ah	MTU7	Timer A/D Converter Start Request Cycle Set Buffer Register B	TADCOBRB	16	16	4 or 5 PCLKA
000C 1A4Ch	MTU6	Timer Control Register 2	TCR2	8	8	4 or 5 PCLKA
000C 1A4Dh	MTU7	Timer Control Register 2	TCR2	8	8	4 or 5 PCLKA
000C 1A50h	MTU6	Timer Synchronous Clear Register	TSYCR	8	8	4 or 5 PCLKA
000C 1A60h	MTU	Timer Waveform Control Register B	TWCRB	8	8	4 or 5 PCLKA
000C 1A70h	MTU	Timer Mode Register 2B	TMDR2B	8	8	4 or 5 PCLKA
000C 1A72h	MTU6	Timer General Register E	TGRE	16	16	4 or 5 PCLKA
000C 1A74h	MTU7	Timer General Register E	TGRE	16	16	4 or 5 PCLKA
000C 1A76h	MTU7	Timer General Register F	TGRF	16	16	4 or 5 PCLKA
000C 1A80h	MTU	Timer Start Register B	TSTRB	8	8, 16	4 or 5 PCLKA
000C 1A81h	MTU	Timer Synchronous Register B	TSYRB	8	8	4 or 5 PCLKA
000C 1A84h	MTU	Timer Read/Write Enable Register B	TRWERB	8	8	4 or 5 PCLKA
000C 1A93h	MTU6	Noise Filter Control Register 6	NFCR6	8	8	4 or 5 PCLKA
000C 1A94h	MTU7	Noise Filter Control Register 7	NFCR7	8	8	4 or 5 PCLKA
000C 1A95h	MTU5	Noise Filter Control Register 5	NFCR5	8	8	4 or 5 PCLKA
000C 1C80h	MTU5	Timer Counter U	TCNTU	16	16, 32	4 or 5 PCLKA
000C 1C82h	MTU5	Timer General Register U	TGRU	16	16	4 or 5 PCLKA
000C 1C84h	MTU5	Timer Control Register U	TCRU	8	8	4 or 5 PCLKA
000C 1C85h	MTU5	Timer Control Register 2U	TCR2U	8	8	4 or 5 PCLKA
000C 1C86h	MTU5	Timer I/O Control Register U	TIORU	8	8	4 or 5 PCLKA
000C 1C90h	MTU5	Timer Counter V	TCNTV	16	16, 32	4 or 5 PCLKA
000C 1C92h	MTU5	Timer General Register V	TGRV	16	16	4 or 5 PCLKA
000C 1C94h	MTU5	Timer Control Register V	TCRV	8	8	4 or 5 PCLKA
000C 1C95h	MTU5	Timer Control Register 2V	TCR2V	8	8	4 or 5 PCLKA
000C 1C96h	MTU5	Timer I/O Control Register V	TIORV	8	8	4 or 5 PCLKA
000C 1CA0h	MTU5	Timer Counter W	TCNTW	16	16, 32	4 or 5 PCLKA
000C 1CA2h	MTU5	Timer General Register W	TGRW	16	16	4 or 5 PCLKA
000C 1CA4h	MTU5	Timer Control Register W	TCRW	8	8	4 or 5 PCLKA
000C 1CA5h	MTU5	Timer Control Register 2W	TCR2W	8	8	4 or 5 PCLKA
000C 1CA6h	MTU5	Timer I/O Control Register W	TIORW	8	8	4 or 5 PCLKA
000C 1CB2h	MTU5	Timer Interrupt Enable Register	TIER	8	8	4 or 5 PCLKA
000C 1CB4h	MTU5	Timer Start Register	TSTR	8	8	4 or 5 PCLKA
000C 1CB6h	MTU5	Timer Compare Match Clear Register	TCNTCMPCLR	8	8	4 or 5 PCLKA
000C 1D30h	MTU	A/D Conversion Start Request Select Register 0	TADSTRGR0	8	8	4 or 5 PCLKA
000C 1D32h	MTU	A/D Conversion Start Request Select Register 1	TADSTRGR1	8	8	4 or 5 PCLKA
000C 2000h	GPT	General PWM Timer Software Start Register	GTSTR	16	8, 16, 32	4 or 5 PCLKA

Table 4.1 List of I/O Registers (Address Order) (35/40)

Address	Module Symbol	Register Name	Register Symbol	Number of Bits	Access Size	Number of Access Cycles ICLK ≥ PCLK
000C 2002h	GPT	Noise Filter Control Register	NFCR	16	16, 32	4 or 5 PCLKA
000C 2004h	GPT	General PWM Timer Hardware Source Start/Stop Control Register 0	GTHSCR	16	8, 16, 32	4 or 5 PCLKA
000C 2006h	GPT	General PWM Timer Hardware Source Clear Control Register	GTHCCR	16	8, 16, 32	4 or 5 PCLKA
000C 2008h	GPT	General PWM Timer Hardware Start Source Select Register	GTHSSR	16	8, 16, 32	4 or 5 PCLKA
000C 200Ah	GPT	General PWM Timer Hardware Stop/Clear Source Select Register	GTHPSR	16	8, 16, 32	4 or 5 PCLKA
000C 200Ch	GPT	General PWM Timer Write-Protection Register	GTWP	16	8, 16, 32	4 or 5 PCLKA
000C 200Eh	GPT	General PWM Timer Sync Register	GTSYNC	16	8, 16, 32	4 or 5 PCLKA
000C 2010h	GPT	General PWM Timer External Trigger Input Interrupt Register	GTETINT	16	8, 16, 32	4 or 5 PCLKA
000C 2014h	GPT	General PWM Timer Buffer Operation Disable Register	GTBDR	16	8, 16, 32	4 or 5 PCLKA
000C 2018h	GPT	General PWM Timer Start Write-Protection Register	GTSWP	16	8, 16, 32	4 or 5 PCLKA
000C 201Ch	GPT	General PWM Timer Clearing Write-Protection Register	GTCWP	16	8, 16, 32	4 or 5 PCLKA
000C 2020h	GPT	General PWM Timer Common Register Write-Protection Register	GTCMNWP	16	8, 16, 32	4 or 5 PCLKA
000C 2024h	GPT	General PWM Timer Mode Register	GTMDR	16	8, 16, 32	4 or 5 PCLKA
000C 2028h	GPT	General PWM Timer External Clock Noise Filter Control Register	GTECNFCR	32	8, 16, 32	4 or 5 PCLKA
000C 202Ch	GPT	General PWM Timer A/D Conversion Start Request Signal Monitor Register	GTADSMR	32	8, 16, 32	4 or 5 PCLKA
000C 2100h	GPT0	General PWM Timer I/O Control Register	GTIOR	16	8, 16, 32	4 or 5 PCLKA
000C 2102h	GPT0	General PWM Timer Interrupt Output Setting Register	GTINTAD	16	8, 16, 32	4 or 5 PCLKA
000C 2104h	GPT0	General PWM Timer Control Register	GTCR	16	8, 16, 32	4 or 5 PCLKA
000C 2106h	GPT0	General PWM Timer Buffer Enable Register	GTBER	16	8, 16, 32	4 or 5 PCLKA
000C 2108h	GPT0	General PWM Timer Count Direction Register	GTUDC	16	8, 16, 32	4 or 5 PCLKA
000C 210Ah	GPT0	General PWM Timer Interrupt and A/D Converter Start Request Skipping Setting Register	GTITC	16	8, 16, 32	4 or 5 PCLKA
000C 210Ch	GPT0	General PWM Timer Status Register	GTST	16	8, 16, 32	4 or 5 PCLKA
000C 210Eh	GPT0	General PWM Timer Counter	GTCNT	16	16	4 or 5 PCLKA
000C 2110h	GPT0	General PWM Timer Compare Capture Register A	GTCCRA	16	16, 32	4 or 5 PCLKA
000C 2112h	GPT0	General PWM Timer Compare Capture Register B	GTCCRB	16	16, 32	4 or 5 PCLKA
000C 2114h	GPT0	General PWM Timer Compare Capture Register C	GTCCRC	16	16, 32	4 or 5 PCLKA
000C 2116h	GPT0	General PWM Timer Compare Capture Register D	GTCCRD	16	16, 32	4 or 5 PCLKA
000C 2118h	GPT0	General PWM Timer Compare Capture Register E	GTCCRE	16	16, 32	4 or 5 PCLKA
000C 211Ah	GPT0	General PWM Timer Compare Capture Register F	GTCCRF	16	16, 32	4 or 5 PCLKA
000C 211Ch	GPT0	General PWM Timer Period Setting Register	GTPR	16	16, 32	4 or 5 PCLKA
000C 211Eh	GPT0	General PWM Timer Period Setting Buffer Register	GTPBR	16	16, 32	4 or 5 PCLKA
000C 2120h	GPT0	General PWM Timer Period Setting Double Buffer Register	GTPDBR	16	16, 32	4 or 5 PCLKA
000C 2124h	GPT0	A/D Converter Start Request Timing Register A	GTADTRA	16	16, 32	4 or 5 PCLKA
000C 2126h	GPT0	A/D Converter Start Request Timing Buffer Register A	GTADTBRA	16	16, 32	4 or 5 PCLKA
000C 2128h	GPT0	A/D Converter Start Request Timing Double Buffer Register A	GTADTDBRA	16	16, 32	4 or 5 PCLKA
000C 212Ch	GPT0	A/D Converter Start Request Timing Register B	GTADTRB	16	16, 32	4 or 5 PCLKA
000C 212Eh	GPT0	A/D Converter Start Request Timing Buffer Register B	GTADTBRB	16	16, 32	4 or 5 PCLKA
000C 2130h	GPT0	A/D Converter Start Request Timing Double Buffer Register B	GTADTDBRB	16	16, 32	4 or 5 PCLKA
000C 2134h	GPT0	General PWM Timer Output Negate Control Register	GTONCR	16	16, 32	4 or 5 PCLKA
000C 2136h	GPT0	General PWM Timer Dead Time Control Register	GTDTCR	16	16, 32	4 or 5 PCLKA
000C 2138h	GPT0	General PWM Timer Dead Time Value Register U	GTDVU	16	16, 32	4 or 5 PCLKA
000C 213Ah	GPT0	General PWM Timer Dead Time Value Register D	GTDVD	16	16, 32	4 or 5 PCLKA
000C 213Ch	GPT0	General PWM Timer Dead Time Buffer Register U	GTDBU	16	16, 32	4 or 5 PCLKA
000C 213Eh	GPT0	General PWM Timer Dead Time Buffer Register D	GTDBD	16	16, 32	4 or 5 PCLKA
000C 2140h	GPT0	General PWM Timer Output Protection Function Status Register	GTSOS	16	16, 32	4 or 5 PCLKA

Table 4.1 List of I/O Registers (Address Order) (36/40)

Address	Module Symbol	Register Name	Register Symbol	Number of Bits	Access Size	Number of Access Cycles ICLK ≥ PCLK
000C 2142h	GPT0	General PWM Timer Output Protection Function Temporary Release Register	GTSOTR	16	16, 32	4 or 5 PCLKA
000C 2180h	GPT1	General PWM Timer I/O Control Register	GTIOR	16	8, 16, 32	4 or 5 PCLKA
000C 2182h	GPT1	General PWM Timer Interrupt Output Setting Register	GTINTAD	16	8, 16, 32	4 or 5 PCLKA
000C 2184h	GPT1	General PWM Timer Control Register	GTCR	16	8, 16, 32	4 or 5 PCLKA
000C 2186h	GPT1	General PWM Timer Buffer Enable Register	GTBER	16	8, 16, 32	4 or 5 PCLKA
000C 2188h	GPT1	General PWM Timer Count Direction Register	GTUDC	16	8, 16, 32	4 or 5 PCLKA
000C 218Ah	GPT1	General PWM Timer Interrupt and A/D Converter Start Request Skipping Setting Register	GTITC	16	8, 16, 32	4 or 5 PCLKA
000C 218Ch	GPT1	General PWM Timer Status Register	GTST	16	8, 16, 32	4 or 5 PCLKA
000C 218Eh	GPT1	General PWM Timer Counter	GTCNT	16	16	4 or 5 PCLKA
000C 2190h	GPT1	General PWM Timer Compare Capture Register A	GTCCRA	16	16, 32	4 or 5 PCLKA
000C 2192h	GPT1	General PWM Timer Compare Capture Register B	GTCCRB	16	16, 32	4 or 5 PCLKA
000C 2194h	GPT1	General PWM Timer Compare Capture Register C	GTCCRC	16	16, 32	4 or 5 PCLKA
000C 2196h	GPT1	General PWM Timer Compare Capture Register D	GTCCRD	16	16, 32	4 or 5 PCLKA
000C 2198h	GPT1	General PWM Timer Compare Capture Register E	GTCCRE	16	16, 32	4 or 5 PCLKA
000C 219Ah	GPT1	General PWM Timer Compare Capture Register F	GTCCRF	16	16, 32	4 or 5 PCLKA
000C 219Ch	GPT1	General PWM Timer Period Setting Register	GTPR	16	16, 32	4 or 5 PCLKA
000C 219Eh	GPT1	General PWM Timer Period Setting Buffer Register	GTPBR	16	16, 32	4 or 5 PCLKA
000C 21A0h	GPT1	General PWM Timer Period Setting Double Buffer Register	GTPDBR	16	16, 32	4 or 5 PCLKA
000C 21A4h	GPT1	A/D Converter Start Request Timing Register A	GTADTRA	16	16, 32	4 or 5 PCLKA
000C 21A6h	GPT1	A/D Converter Start Request Timing Buffer Register A	GTADTBRA	16	16, 32	4 or 5 PCLKA
000C 21A8h	GPT1	A/D Converter Start Request Timing Double Buffer Register A	GTADTDBRA	16	16, 32	4 or 5 PCLKA
000C 21ACh	GPT1	A/D Converter Start Request Timing Register B	GTADTRB	16	16, 32	4 or 5 PCLKA
000C 21AEh	GPT1	A/D Converter Start Request Timing Buffer Register B	GTADTBRB	16	16, 32	4 or 5 PCLKA
000C 21B0h	GPT1	A/D Converter Start Request Timing Double Buffer Register B	GTADTDBRB	16	16, 32	4 or 5 PCLKA
000C 21B4h	GPT1	General PWM Timer Output Negate Control Register	GTONCR	16	16, 32	4 or 5 PCLKA
000C 21B6h	GPT1	General PWM Timer Dead Time Control Register	GTDTCR	16	16, 32	4 or 5 PCLKA
000C 21B8h	GPT1	General PWM Timer Dead Time Value Register U	GTDVU	16	16, 32	4 or 5 PCLKA
000C 21BAh	GPT1	General PWM Timer Dead Time Value Register D	GTDVD	16	16, 32	4 or 5 PCLKA
000C 21BCh	GPT1	General PWM Timer Dead Time Buffer Register U	GTDBU	16	16, 32	4 or 5 PCLKA
000C 21BEh	GPT1	General PWM Timer Dead Time Buffer Register D	GTDBD	16	16, 32	4 or 5 PCLKA
000C 21C0h	GPT1	General PWM Timer Output Protection Function Status Register	GTSOS	16	16, 32	4 or 5 PCLKA
000C 21C2h	GPT1	General PWM Timer Output Protection Function Temporary Release Register	GTSOTR	16	16, 32	4 or 5 PCLKA
000C 2200h	GPT2	General PWM Timer I/O Control Register	GTIOR	16	8, 16, 32	4 or 5 PCLKA
000C 2202h	GPT2	General PWM Timer Interrupt Output Setting Register	GTINTAD	16	8, 16, 32	4 or 5 PCLKA
000C 2204h	GPT2	General PWM Timer Control Register	GTCR	16	8, 16, 32	4 or 5 PCLKA
000C 2206h	GPT2	General PWM Timer Buffer Enable Register	GTBER	16	8, 16, 32	4 or 5 PCLKA
000C 2208h	GPT2	General PWM Timer Count Direction Register	GTUDC	16	8, 16, 32	4 or 5 PCLKA
000C 220Ah	GPT2	General PWM Timer Interrupt and A/D Converter Start Request Skipping Setting Register	GTITC	16	8, 16, 32	4 or 5 PCLKA
000C 220Ch	GPT2	General PWM Timer Status Register	GTST	16	8, 16, 32	4 or 5 PCLKA
000C 220Eh	GPT2	General PWM Timer Counter	GTCNT	16	16	4 or 5 PCLKA
000C 2210h	GPT2	General PWM Timer Compare Capture Register A	GTCCRA	16	16, 32	4 or 5 PCLKA
000C 2212h	GPT2	General PWM Timer Compare Capture Register B	GTCCRB	16	16, 32	4 or 5 PCLKA
000C 2214h	GPT2	General PWM Timer Compare Capture Register C	GTCCRC	16	16, 32	4 or 5 PCLKA
000C 2216h	GPT2	General PWM Timer Compare Capture Register D	GTCCRD	16	16, 32	4 or 5 PCLKA
000C 2218h	GPT2	General PWM Timer Compare Capture Register E	GTCCRE	16	16, 32	4 or 5 PCLKA
000C 221Ah	GPT2	General PWM Timer Compare Capture Register F	GTCCRF	16	16, 32	4 or 5 PCLKA
000C 221Ch	GPT2	General PWM Timer Period Setting Register	GTPR	16	16, 32	4 or 5 PCLKA
000C 221Eh	GPT2	General PWM Timer Period Setting Buffer Register	GTPBR	16	16, 32	4 or 5 PCLKA

Table 4.1 List of I/O Registers (Address Order) (37/40)

Address	Module Symbol	Register Name	Register Symbol	Number of Bits	Access Size	Number of Access Cycles ICLK ≥ PCLK
000C 2220h	GPT2	General PWM Timer Period Setting Double Buffer Register	GTPDBR	16	16, 32	4 or 5 PCLKA
000C 2224h	GPT2	A/D Converter Start Request Timing Register A	GTADTRA	16	16, 32	4 or 5 PCLKA
000C 2226h	GPT2	A/D Converter Start Request Timing Buffer Register A	GTADTBRA	16	16, 32	4 or 5 PCLKA
000C 2228h	GPT2	A/D Converter Start Request Timing Double Buffer Register A	GTADTDBRA	16	16, 32	4 or 5 PCLKA
000C 222Ch	GPT2	A/D Converter Start Request Timing Register B	GTADTRB	16	16, 32	4 or 5 PCLKA
000C 222Eh	GPT2	A/D Converter Start Request Timing Buffer Register B	GTADTBRB	16	16, 32	4 or 5 PCLKA
000C 2230h	GPT2	A/D Converter Start Request Timing Double Buffer Register B	GTADTDBRB	16	16, 32	4 or 5 PCLKA
000C 2234h	GPT2	General PWM Timer Output Negate Control Register	GTONCR	16	16, 32	4 or 5 PCLKA
000C 2236h	GPT2	General PWM Timer Dead Time Control Register	GTDTCR	16	16, 32	4 or 5 PCLKA
000C 2238h	GPT2	General PWM Timer Dead Time Value Register U	GTDVU	16	16, 32	4 or 5 PCLKA
000C 223Ah	GPT2	General PWM Timer Dead Time Value Register D	GTDVD	16	16, 32	4 or 5 PCLKA
000C 223Ch	GPT2	General PWM Timer Dead Time Buffer Register U	GTDBU	16	16, 32	4 or 5 PCLKA
000C 223Eh	GPT2	General PWM Timer Dead Time Buffer Register D	GTDBD	16	16, 32	4 or 5 PCLKA
000C 2240h	GPT2	General PWM Timer Output Protection Function Status Register	GTSOS	16	16, 32	4 or 5 PCLKA
000C 2242h	GPT2	General PWM Timer Output Protection Function Temporary Release Register	GTSOTR	16	16, 32	4 or 5 PCLKA
000C 2280h	GPT3	General PWM Timer I/O Control Register	GTIOR	16	8, 16, 32	4 or 5 PCLKA
000C 2282h	GPT3	General PWM Timer Interrupt Output Setting Register	GTINTAD	16	8, 16, 32	4 or 5 PCLKA
000C 2284h	GPT3	General PWM Timer Control Register	GTCR	16	8, 16, 32	4 or 5 PCLKA
000C 2286h	GPT3	General PWM Timer Buffer Enable Register	GTBER	16	8, 16, 32	4 or 5 PCLKA
000C 2288h	GPT3	General PWM Timer Count Direction Register	GTUDC	16	8, 16, 32	4 or 5 PCLKA
000C 228Ah	GPT3	General PWM Timer Interrupt and A/D Converter Start Request Skipping Setting Register	GTITC	16	8, 16, 32	4 or 5 PCLKA
000C 228Ch	GPT3	General PWM Timer Status Register	GTST	16	8, 16, 32	4 or 5 PCLKA
000C 228Eh	GPT3	General PWM Timer Counter	GTCNT	16	16	4 or 5 PCLKA
000C 2290h	GPT3	General PWM Timer Compare Capture Register A	GTCCRA	16	16, 32	4 or 5 PCLKA
000C 2292h	GPT3	General PWM Timer Compare Capture Register B	GTCCRB	16	16, 32	4 or 5 PCLKA
000C 2294h	GPT3	General PWM Timer Compare Capture Register C	GTCCRC	16	16, 32	4 or 5 PCLKA
000C 2296h	GPT3	General PWM Timer Compare Capture Register D	GTCCRD	16	16, 32	4 or 5 PCLKA
000C 2298h	GPT3	General PWM Timer Compare Capture Register E	GTCCRE	16	16, 32	4 or 5 PCLKA
000C 229Ah	GPT3	General PWM Timer Compare Capture Register F	GTCCRF	16	16, 32	4 or 5 PCLKA
000C 229Ch	GPT3	General PWM Timer Period Setting Register	GTPR	16	16, 32	4 or 5 PCLKA
000C 229Eh	GPT3	General PWM Timer Period Setting Buffer Register	GTPBR	16	16, 32	4 or 5 PCLKA
000C 22A0h	GPT3	General PWM Timer Period Setting Double Buffer Register	GTPDBR	16	16, 32	4 or 5 PCLKA
000C 22A4h	GPT3	A/D Converter Start Request Timing Register A	GTADTRA	16	16, 32	4 or 5 PCLKA
000C 22A6h	GPT3	A/D Converter Start Request Timing Buffer Register A	GTADTBRA	16	16, 32	4 or 5 PCLKA
000C 22A8h	GPT3	A/D Converter Start Request Timing Double Buffer Register A	GTADTDBRA	16	16, 32	4 or 5 PCLKA
000C 22ACh	GPT3	A/D Converter Start Request Timing Register B	GTADTRB	16	16, 32	4 or 5 PCLKA
000C 22AEh	GPT3	A/D Converter Start Request Timing Buffer Register B	GTADTBRB	16	16, 32	4 or 5 PCLKA
000C 22B0h	GPT3	A/D Converter Start Request Timing Double Buffer Register B	GTADTDBRB	16	16, 32	4 or 5 PCLKA
000C 22B4h	GPT3	General PWM Timer Output Negate Control Register	GTONCR	16	16, 32	4 or 5 PCLKA
000C 22B6h	GPT3	General PWM Timer Dead Time Control Register	GTDTCR	16	16, 32	4 or 5 PCLKA
000C 22B8h	GPT3	General PWM Timer Dead Time Value Register U	GTDVU	16	16, 32	4 or 5 PCLKA
000C 22BAh	GPT3	General PWM Timer Dead Time Value Register D	GTDVD	16	16, 32	4 or 5 PCLKA
000C 22BCh	GPT3	General PWM Timer Dead Time Buffer Register U	GTDBU	16	16, 32	4 or 5 PCLKA
000C 22BEh	GPT3	General PWM Timer Dead Time Buffer Register D	GTDBD	16	16, 32	4 or 5 PCLKA
000C 22C0h	GPT3	General PWM Timer Output Protection Function Status Register	GTSOS	16	16, 32	4 or 5 PCLKA
000C 22C2h	GPT3	General PWM Timer Output Protection Function Temporary Release Register	GTSOTR	16	16, 32	4 or 5 PCLKA
000C 2300h	GPT01	General PWM Timer Longword Counter	GTCNTLW	32	32	4 or 5 PCLKA

Table 4.1 List of I/O Registers (Address Order) (38/40)

Address	Module Symbol	Register Name	Register Symbol	Number of Bits	Access Size	Number of Access Cycles ICLK ≥ PCLK
000C 2304h	GPT01	General PWM Timer Longword Compare Capture Register A	GTCCRALW	32	32	4 or 5 PCLKA
000C 2308h	GPT01	General PWM Timer Longword Compare Capture Register B	GTCCRBLW	32	32	4 or 5 PCLKA
000C 230Ch	GPT01	General PWM Timer Longword Compare Capture Register C	GTCCRCLW	32	32	4 or 5 PCLKA
000C 2310h	GPT01	General PWM Timer Longword Compare Capture Register D	GTCCRDLW	32	32	4 or 5 PCLKA
000C 2314h	GPT01	General PWM Timer Longword Compare Capture Register E	GTCCRELW	32	32	4 or 5 PCLKA
000C 2318h	GPT01	General PWM Timer Longword Compare Capture Register F	GTCCRFLW	32	32	4 or 5 PCLKA
000C 231Ch	GPT01	General PWM Timer Longword Period Setting Register	GTPRLW	32	32	4 or 5 PCLKA
000C 2320h	GPT01	General PWM Timer Longword Period Setting Buffer Register	GTPBRLW	32	32	4 or 5 PCLKA
000C 2324h	GPT01	General PWM Timer Longword Period Setting Double Buffer Register	GTPDBRLW	32	32	4 or 5 PCLKA
000C 2328h	GPT01	Longword A/D Converter Start Request Timing Register A	GTADTRALW	32	32	4 or 5 PCLKA
000C 232Ch	GPT01	Longword A/D Converter Start Request Timing Buffer Register A	GTADTBRALW	32	32	4 or 5 PCLKA
000C 2330h	GPT01	Longword A/D Converter Start Request Timing Double Buffer Register A	GTADTDBRALW	32	32	4 or 5 PCLKA
000C 2334h	GPT01	Longword A/D Converter Start Request Timing Register B	GTADTRBLW	32	32	4 or 5 PCLKA
000C 2338h	GPT01	Longword A/D Converter Start Request Timing Buffer Register B	GTADTBRBLW	32	32	4 or 5 PCLKA
000C 233Ch	GPT01	Longword A/D Converter Start Request Timing Double Buffer Register B	GTADTDBRBLW	32	32	4 or 5 PCLKA
000C 2340h	GPT01	General PWM Timer Longword Dead Time Value Register U	GTDVULW	32	32	4 or 5 PCLKA
000C 2344h	GPT01	General PWM Timer Longword Dead Time Value Register D	GTDVDLW	32	32	4 or 5 PCLKA
000C 2348h	GPT01	General PWM Timer Longword Dead Time Buffer Register U	GTDBULW	32	32	4 or 5 PCLKA
000C 234Ch	GPT01	General PWM Timer Longword Dead Time Buffer Register D	GTDBDLW	32	32	4 or 5 PCLKA
000C 2380h	GPT23	General PWM Timer Longword Counter	GTCNTLW	32	32	4 or 5 PCLKA
000C 2384h	GPT23	General PWM Timer Longword Compare Capture Register A	GTCCRALW	32	32	4 or 5 PCLKA
000C 2388h	GPT23	General PWM Timer Longword Compare Capture Register B	GTCCRBLW	32	32	4 or 5 PCLKA
000C 238Ch	GPT23	General PWM Timer Longword Compare Capture Register C	GTCCRCLW	32	32	4 or 5 PCLKA
000C 2390h	GPT23	General PWM Timer Longword Compare Capture Register D	GTCCRDLW	32	32	4 or 5 PCLKA
000C 2394h	GPT23	General PWM Timer Longword Compare Capture Register E	GTCCRELW	32	32	4 or 5 PCLKA
000C 2398h	GPT23	General PWM Timer Longword Compare Capture Register F	GTCCRFLW	32	32	4 or 5 PCLKA
000C 239Ch	GPT23	General PWM Timer Longword Period Setting Register	GTPRLW	32	32	4 or 5 PCLKA
000C 23A0h	GPT23	General PWM Timer Longword Period Setting Buffer Register	GTPBRLW	32	32	4 or 5 PCLKA
000C 23A4h	GPT23	General PWM Timer Longword Period Setting Double Buffer Register	GTPDBRLW	32	32	4 or 5 PCLKA
000C 23A8h	GPT23	Longword A/D Converter Start Request Timing Register A	GTADTRALW	32	32	4 or 5 PCLKA
000C 23ACh	GPT23	Longword A/D Converter Start Request Timing Buffer Register A	GTADTBRALW	32	32	4 or 5 PCLKA
000C 23B0h	GPT23	Longword A/D Converter Start Request Timing Double Buffer Register A	GTADTDBRALW	32	32	4 or 5 PCLKA
000C 23B4h	GPT23	Longword A/D Converter Start Request Timing Register B	GTADTRBLW	32	32	4 or 5 PCLKA
000C 23B8h	GPT23	Longword A/D Converter Start Request Timing Buffer Register B	GTADTBRBLW	32	32	4 or 5 PCLKA
000C 23BCh	GPT23	Longword A/D Converter Start Request Timing Double Buffer Register B	GTADTDBRBLW	32	32	4 or 5 PCLKA
000C 23C0h	GPT23	General PWM Timer Longword Dead Time Value Register U	GTDVULW	32	32	4 or 5 PCLKA

Table 4.1 List of I/O Registers (Address Order) (39/40)

Address	Module Symbol	Register Name	Register Symbol	Number of Bits	Access Size	Number of Access Cycles ICLK ≥ PCLK
000C 23C4h	GPT23	General PWM Timer Longword Dead Time Value Register D	GTDVDLW	32	32	4 or 5 PCLKA
000C 23C8h	GPT23	General PWM Timer Longword Dead Time Buffer Register U	GTDBULW	32	32	4 or 5 PCLKA
000C 23CCh	GPT23	General PWM Timer Longword Dead Time Buffer Register D	GTDBDLW	32	32	4 or 5 PCLKA
000D 0000h	SCI11	Serial Mode Register	SMR	8	8	3 or 4 PCLKA
000D 0001h	SCI11	Bit Rate Register	BRR	8	8	3 or 4 PCLKA
000D 0002h	SCI11	Serial Control Register	SCR	8	8	3 or 4 PCLKA
000D 0003h	SCI11	Transmit Data Register	TDR	8	8	3 or 4 PCLKA
000D 0004h	SCI11	Serial Status Register	SSR	8	8	3 or 4 PCLKA
000D 0005h	SCI11	Receive Data Register	RDR	8	8	3 or 4 PCLKA
000D 0006h	SMCI11	Smart Card Mode Register	SCMR	8	8	3 or 4 PCLKA
000D 0007h	SCI11	Serial Extended Mode Register	SEMR	8	8	3 or 4 PCLKA
000D 0008h	SCI11	Noise Filter Setting Register	SNFR	8	8	3 or 4 PCLKA
000D 0009h	SCI11	I^2C Mode Register 1	SIMR1	8	8	3 or 4 PCLKA
000D 000Ah	SCI11	I^2C Mode Register 2	SIMR2	8	8	3 or 4 PCLKA
000D 000Bh	SCI11	I^2C Mode Register 3	SIMR3	8	8	3 or 4 PCLKA
000D 000Ch	SCI11	I^2C Status Register	SISR	8	8	3 or 4 PCLKA
000D 000Dh	SCI11	SPI Mode Register	SPMR	8	8	3 or 4 PCLKA
000D 000Eh	SCI11	Transmit Data Register HL	TDRHL	16	16	5 or 6 PCLKA
000D 000Eh	SCI11	Transmit Data Register H	TDRH	8	8	3 or 4 PCLKA
000D 000Fh	SCI11	Transmit Data Register L	TDRL	8	8	3 or 4 PCLKA
000D 0010h	SCI11	Receive Data Register HL	RDRHL	16	16	5 or 6 PCLKA
000D 0010h	SCI11	Receive Data Register H	RDRH	8	8	3 or 4 PCLKA
000D 0011h	SCI11	Receive Data Register L	RDRL	8	8	3 or 4 PCLKA
000D 0012h	SCI11	Modulation Duty Register	MDDR	8	8	3 or 4 PCLKA
007F C090h	FLASH	E2 DataFlash Control Register	DFLCTL	8	8	2 or 3 FCLK
007F C100h	FLASH	Flash P/E Mode Control Register	FPMCR	8	8	2 or 3 FCLK
007F C104h	FLASH	Flash Area Select Register	FASR	8	8	2 or 3 FCLK
007F C108h	FLASH	Flash Processing Start Address Register L	FSARL	16	16	2 or 3 FCLK
007F C110h	FLASH	Flash Processing Start Address Register H	FSARH	16	16	2 or 3 FCLK
007F C114h	FLASH	Flash Control Register	FCR	8	8	2 or 3 FCLK
007F C118h	FLASH	Flash Processing End Address Register L	FEARL	16	16	2 or 3 FCLK
007F C120h	FLASH	Flash Processing End Address Register H	FEARH	16	16	2 or 3 FCLK
007F C124h	FLASH	Flash Reset Register	FRESETR	8	8	2 or 3 FCLK
007F C12Ch	FLASH	Flash Status Register 1	FSTATR1	8	8	2 or 3 FCLK
007F C130h	FLASH	Flash Write Buffer 0 Register	FWB0	16	16	2 or 3 FCLK
007F C138h	FLASH	Flash Write Buffer 1 Register	FWB1	16	16	2 or 3 FCLK
007F C140h	FLASH	Flash Write Buffer 2 Register	FWB2	16	16	2 or 3 FCLK
007F C144h	FLASH	Flash Write Buffer 3 Register	FWB3	16	16	2 or 3 FCLK
007F C180h	FLASH	Protection Unlock Register	FPR	8	8	2 or 3 FCLK
007F C184h	FLASH	Protection Unlock Status Register	FPSR	8	8	2 or 3 FCLK
007F C1C0h	FLASH	Flash Start-Up Setting Monitor Register	FSCMR	16	16	2 or 3 FCLK
007F C1C8h	FLASH	Flash Access Window Start Address Monitor Register	FAWSMR	16	16	2 or 3 FCLK
007F C1D0h	FLASH	Flash Access Window End Address Monitor Register	FAWEMR	16	16	2 or 3 FCLK
007F C1D8h	FLASH	Flash Initial Setting Register	FISR	8	8	2 or 3 FCLK
007F C1DCh	FLASH	Flash Extra Area Control Register	FEXCR	8	8	2 or 3 FCLK
007F C1E0h	FLASH	Flash Error Address Monitor Register L	FEAML	16	16	2 or 3 FCLK
007F C1E8h	FLASH	Flash Error Address Monitor Register H	FEAMH	16	16	2 or 3 FCLK
007F C1F0h	FLASH	Flash Status Register 0	FSTATR0	8	8	2 or 3 FCLK
007F C350h	FLASHCONST	Unique ID Register 0	UIDR0	32	32	2 or 3 FCLK

Table 4.1 List of I/O Registers (Address Order) (40/40)

Address	Module Symbol	Register Name	Register Symbol	Number of Bits	Access Size	Number of Access Cycles ICLK ≥ PCLK
007F C354h	FLASHCONST	Unique ID Register 1	UIDR1	32	32	2 or 3 FCLK
007F C358h	FLASHCONST	Unique ID Register 2	UIDR2	32	32	2 or 3 FCLK
007F C35Ch	FLASHCONST	Unique ID Register 3	UIDR3	32	32	2 or 3 FCLK
007F FFB2h	FLASH	Flash P/E Mode Entry Register	FENTRYR	16	16	2 or 3 FCLK

Note 1. Odd addresses cannot be accessed in 16-bit units. When accessing a register in 16-bit units, access the address of the TMR0, TMR2, TMR4, or TMR6 register. Table 23.5 lists register allocation for 16-bit access in the User's Manual: Hardware.

5. Electrical Characteristics

5.1 Absolute Maximum Ratings

Table 5.1 Absolute Maximum Ratings

Conditions: VSS = AVSS0 = AVSS1 = AVSS2 = VREFL0 = VREFL1 = VREFL2 = 0 V

Item		Symbol	Value	Unit
Power supply voltage		VCC	–0.3 to +6.5	V
Input voltage	Port 4, port 5, port 6	V_{in}	–0.3 to AVCC2 + 0.3	V
	Except for port 4, port 5, port 6 and ports for 5 V tolerant*1		–0.3 to VCC + 0.3	V
	Ports for 5 V tolerant*1		–0.3 to +6.5	V
Reference power supply voltage		VREFH0	–0.3 to AVCC0 + 0.3	V
		VREFH1	–0.3 to AVCC1 + 0.3	V
		VREFH2	–0.3 to AVCC2 + 0.3	V
Analog power supply voltage		AVCC0, AVCC1, AVCC2	–0.3 to +6.5	V
Analog input voltage	When AN000 to AN003, AN100 to AN103, AN200 to AN211 used	V_{AN}	–0.3 to AVCC2 + 0.3	V
	When AN016, AN116 used		–0.3 to VCC + 0.3	
Reference ground for PGA gain setting resistor		PGAVSS0	–0.3 to AVCC0 + 0.3	V
		PGAVSS1	–0.3 to AVCC1 + 0.3	V
Operating temperature		T_{opr}	–40 to +85	°C
Storage temperature		T_{stg}	–55 to +125	°C

Caution: Permanent damage to the MCU may result if absolute maximum ratings are exceeded.
To preclude any malfunctions due to noise interference, insert capacitors of high frequency characteristics between the VCC and VSS pins, between the AVCC0 and AVSS0 pins, between the AVCC1 and AVSS1 pins, between the AVCC2 and AVSS2 pins, between the VREFH0 and VREFL0 pins, between the VREFH1 and VREFL1 pins, and between the VREFH2 and VREFL2 pins. Place capacitors of about 0.1 μF as close as possible to every power supply pin and use the shortest and heaviest possible traces.
Connect the VCL pin to a VSS pin via a 4.7 μF capacitor. The capacitor must be placed close to the pin.
Do not input signals or an I/O pull-up power supply to ports other than 5 V tolerant ports while the device is not powered.
The current injection that results from input of such a signal or I/O pull-up may cause malfunction and the abnormal current that passes in the device at this time may cause degradation of internal elements.
Even if –0.3 to +6.5 V is input to 5 V tolerant ports, it will not cause problems such as damage to the MCU.
Note 1. Ports B1 and B2 are 5 V tolerant.

Table 5.2 Recommended Operating Voltage Conditions

Item	Symbol	Conditions	Min.	Typ.	Max.	Unit
Power supply voltages	VCC*1, *2		2.7	—	5.5	V
	VSS		—	0	—	
Analog power supply voltages	AVCC0, AVCC1, AVCC2*1, *2, VREFH0, VREFH1, VREFH2		VCC	—	5.5	V
	AVSS0, AVSS1, AVSS2, VREFL0, VREFL1, VREFL2		—	0	—	

Note 1. AVCC0/AVCC1/AVCC2/VREFH0/VREFH1/VREFH2 and VCC can be set individually within the operating range.
Note 2. When powering on the VCC and AVCC0/AVCC1/AVCC2/VREFH0/VREFH1/VREFH2 pins, power them on at the same time or the VCC pin first and then the AVCC0/AVCC1/AVCC2/VREFH0/VREFH1/VREFH2 pin.

5.2 DC Characteristics

Table 5.3 DC Characteristics (1)

Conditions: VCC = 2.7 V to 5.5 V, AVCC0 = AVCC1 = AVCC2 = VREFH0 = VREFH1 = VREFH2 = VCC to 5.5 V, VSS = AVSS0 = AVSS1 = AVSS2 = VREFL0 = VREFL1 = VREFL2 = 0 V, T_a = –40 to +85°C

Item		Symbol	Min.	Typ.	Max.	Unit	Test Conditions
Schmitt trigger input voltage	RIIC input pin (except for SMBus, 5 V tolerant)	V_{IH}	VCC × 0.7	—	5.8	V	
	Ports B1, B2 (5 V tolerant)		VCC × 0.8	—	5.8		
	Ports 00 to 02, ports 10 to 17, ports 20 to 27, ports 30 to 37, ports 70 to 76, ports 80 to 84, ports 90 to 96, ports A0 to A7, ports B0, B3 to B7, ports C0 to C6, ports D0 to D7, ports E0 to E6, ports F0 to F3, ports G0 to G2, RES#		VCC × 0.8	—	VCC + 0.3		
	Ports 40 to 47, ports 50 to 55, ports 60 to 65		AVCC2 × 0.8	—	AVCC2 + 0.3		
	RIIC input pin (except for SMBus)	V_{IL}	–0.3	—	VCC × 0.3		
	Ports 40 to 47, ports 50 to 55, ports 60 to 65		–0.3	—	AVCC2 × 0.2		
	Other than RIIC input pin, Other than ports 40 to 47, ports 50 to 55, or ports 60 to 65		–0.3	—	VCC × 0.2		
	RIIC input pin (except for SMBus)	ΔV_T	VCC × 0.05	—	—		
	Ports 40 to 47, ports 50 to 55, ports 60 to 65		AVCC2 × 0.1	—	—		
	Other than RIIC input pin, Other than ports 40 to 47, ports 50 to 55, or ports 60 to 65		VCC × 0.1	—	—		
Input level voltage (except for Schmitt trigger input pins)	MD	V_{IH}	VCC × 0.9	—	VCC + 0.3	V	
	EXTAL (external clock input)		VCC × 0.8	—	VCC + 0.3		
	RIIC input pin (SMBus)		2.1	—	VCC + 0.3		VCC ≤ 5.2 V
	MD	V_{IL}	–0.3	—	VCC × 0.1		
	EXTAL (external clock input)		–0.3	—	VCC × 0.2		
	RIIC input pin (SMBus)		–0.3	—	0.8		VCC ≤ 5.2 V

Table 5.4 DC Characteristics (2)

Conditions: VCC = 2.7 V to 5.5 V, AVCC0 = AVCC1 = AVCC2 = VREFH0 = VREFH1 = VREFH2 = VCC to 5.5 V, VSS = AVSS0 = AVSS1 = AVSS2 = VREFL0 = VREFL1 = VREFL2 = 0 V, T_a = –40 to +85°C

Item		Symbol	Min.	Typ.	Max.	Unit	Test Conditions
Input leakage current	RES#, MD, port E2	$\lvert I_{in} \rvert$	—	—	1.0	μA	V_{in} = 0 V, VCC
Three-state leakage current (off-state)	Port 4, port 5, port 6	$\lvert I_{TSI} \rvert$	—	—	1.0	μA	V_{in} = 0 V, AVCC2
	Ports except for 5 V tolerant ports and port 4, port 5, port 6		—	—	0.2		V_{in} = 0 V, VCC
	Ports for 5 V tolerant		—	—	1.0		V_{in} = 0 V, 5.8 V
Input capacitance	All input pins	C_{in}	—	4	15	pF	V_{in} = 0 mV, f = 1 MHz, T_a = 25°C
Input pull-up resistor	All ports (except for port E2)	R_U	10	20	50	kΩ	V_{in} = 0 V

Table 5.5 DC Characteristics (3)

Conditions: VCC = 2.7 V to 5.5 V, AVCC0 = AVCC1 = AVCC2 = VREFH0 = VREFH1 = VREFH2 = VCC to 5.5 V, VSS = AVSS0 = AVSS1 = AVSS2 = VREFL0 = VREFL1 = VREFL2 = 0 V, T_a = –40 to +85°C

Item					Symbol	Typ. *7	Max.	Unit	Test Conditions
Supply current *1	High-speed operating mode	Normal operating mode	No peripheral operation*2	ICLK = 80 MHz	I_{CC}	26.0	—	mA	
				ICLK = 64 MHz		20.7	—		
				ICLK = 32 MHz		11.8	—		
				ICLK = 16 MHz		7.0	—		
				ICLK = 8 MHz		4.7	—		
			All peripheral operation: Normal	ICLK = 80 MHz*3		40.5	—		
				ICLK = 64 MHz*4		32.5	—		
				ICLK = 32 MHz*5		20.9	—		
				ICLK = 16 MHz*5		11.7	—		
				ICLK = 8 MHz*5		7.0	—		
			All peripheral operation: Max.	ICLK = 80 MHz*3		—	80.0		
				ICLK = 64 MHz*4		—	70.0		
				ICLK = 32 MHz*5		—	45.0		
		Sleep mode	No peripheral operation*2	ICLK = 80 MHz		7.2	—		
				ICLK = 64 MHz		6.1	—		
				ICLK = 32 MHz		4.4	—		
				ICLK = 16 MHz		3.4	—		
				ICLK = 8 MHz		2.9	—		
			All peripheral operation: Normal	ICLK = 80 MHz*3		26.9	—		
				ICLK = 64 MHz*4		21.9	—		
				ICLK = 32 MHz*5		15.5	—		
				ICLK = 16 MHz*5		9.0	—		
				ICLK = 8 MHz*5		5.7	—		

Item					Symbol	Typ. *7	Max.	Unit	Test Conditions
Supply current *1	High-speed operating mode	Deep sleep mode	No peripheral operation*2	ICLK = 80 MHz	I_{CC}	3.4	—	mA	
				ICLK = 64 MHz		2.9	—		
				ICLK = 32 MHz		2.5	—		
				ICLK = 16 MHz		2.3	—		
				ICLK = 8 MHz		2.2	—		
			All peripheral operation: Normal	ICLK = 80 MHz*3		22.2	—		
				ICLK = 64 MHz*4		17.9	—		
				ICLK = 32 MHz*5		12.9	—		
				ICLK = 16 MHz*5		7.6	—		
				ICLK = 8 MHz*5		4.8	—		
		Increase during BGO operation*6				2.5	—		
	Middle-speed operating modes	Normal operating mode	No peripheral operation*8	ICLK = 12 MHz*10	I_{CC}	5.3	—	mA	
				ICLK = 8 MHz		4.5	—		
				ICLK = 1 MHz		2.5	—		
			All peripheral operation: Normal*9	ICLK = 12 MHz*10		8.7	—		
				ICLK = 8 MHz		6.9	—		
				ICLK = 1 MHz		2.7	—		
			All peripheral operation: Max.*9	ICLK = 12 MHz*10		—	18.0		
		Sleep mode	No peripheral operation*8	ICLK = 12 MHz*10		2.6	—		
				ICLK = 8 MHz		2.7	—		
				ICLK = 1 MHz		2.2	—		
			All peripheral operation: Normal*9	ICLK = 12 MHz*10		6.7	—		
				ICLK = 8 MHz		5.6	—		
				ICLK = 1 MHz		2.5	—		
		Deep sleep mode	No peripheral operation*8	ICLK = 12 MHz*10		1.8	—		
				ICLK = 8 MHz		2.1	—		
				ICLK = 1 MHz		2.1	—		
			All peripheral operation: Normal*9	ICLK = 12 MHz*10		5.7	—		
				ICLK = 8 MHz		4.8	—		
				ICLK = 1 MHz		2.3	—		
		Increase during BGO operation*6				2.5	—		

Note 1. Supply current values do not include output charge/discharge current from all pins. The values apply when internal pull-up MOSs are in the off state.
Note 2. Supply of the clock signal to peripheral modules is stopped in this state. The clock source is PLL. FCLK, PCLKA, PCLKB, and PCLKD are set to divided by 64.
Note 3. The clock signal to peripheral modules is supplied in this state. The clock source is PLL. FCLK is set to divided by 4. PCLKA is set to divided by 1. PCLKB and PCLKD are set to divided by 2.
Note 4. The clock signal to peripheral modules is supplied in this state. The clock source is PLL. PCLKA is set to divided by 1. FCLK, PCLKB, and PCLKD are set to divided by 2.
Note 5. The clock signal to peripheral modules is supplied in this state. The clock source is PLL. The frequencies of FCLK, PCLKA, PCLKB, and PCLKD are same as ICLK.
Note 6. This is the increase when data is programmed to or erased from the ROM or E2 DataFlash during program execution.
Note 7. Values when VCC = 5 V.
Note 8. Supply of the clock signal to peripheral modules is stopped in this state. The clock source is PLL. FCLK, PCLKA, PCLKB, and PCLKD are set to divided by 64.
Note 9. Supply of the clock signal to peripheral modules is stopped in this state. The clock source is PLL. The frequencies of FCLK, PCLKA, PCLKB, and PCLKD are same as ICLK.
Note 10. When the frequency of PLL is 48 MHz.

Table 5.6 DC Characteristics (4)

Conditions: VCC = 2.7 V to 5.5 V, AVCC0 = AVCC1 = AVCC2 = VREFH0 = VREFH1 = VREFH2 = VCC to 5.5 V, VSS = AVSS0 = AVSS1 = AVSS2 = VREFL0 = VREFL1 = VREFL2 = 0 V, T_a = –40 to +85°C

Item			Symbol	Typ.*3	Max.	Unit	Test Conditions
Supply current*1	Software standby mode*2	T_a = 25°C	I_{CC}	1.5	15.0	μA	
		T_a = 55°C		3.0	38.0		
		T_a = 85°C		13.0	135.0		

Note 1. Supply current values are with all output pins unloaded and all input pull-up MOSs in the off state.
Note 2. The IWDT and LVD are stopped.
Note 3. VCC = 5 V.

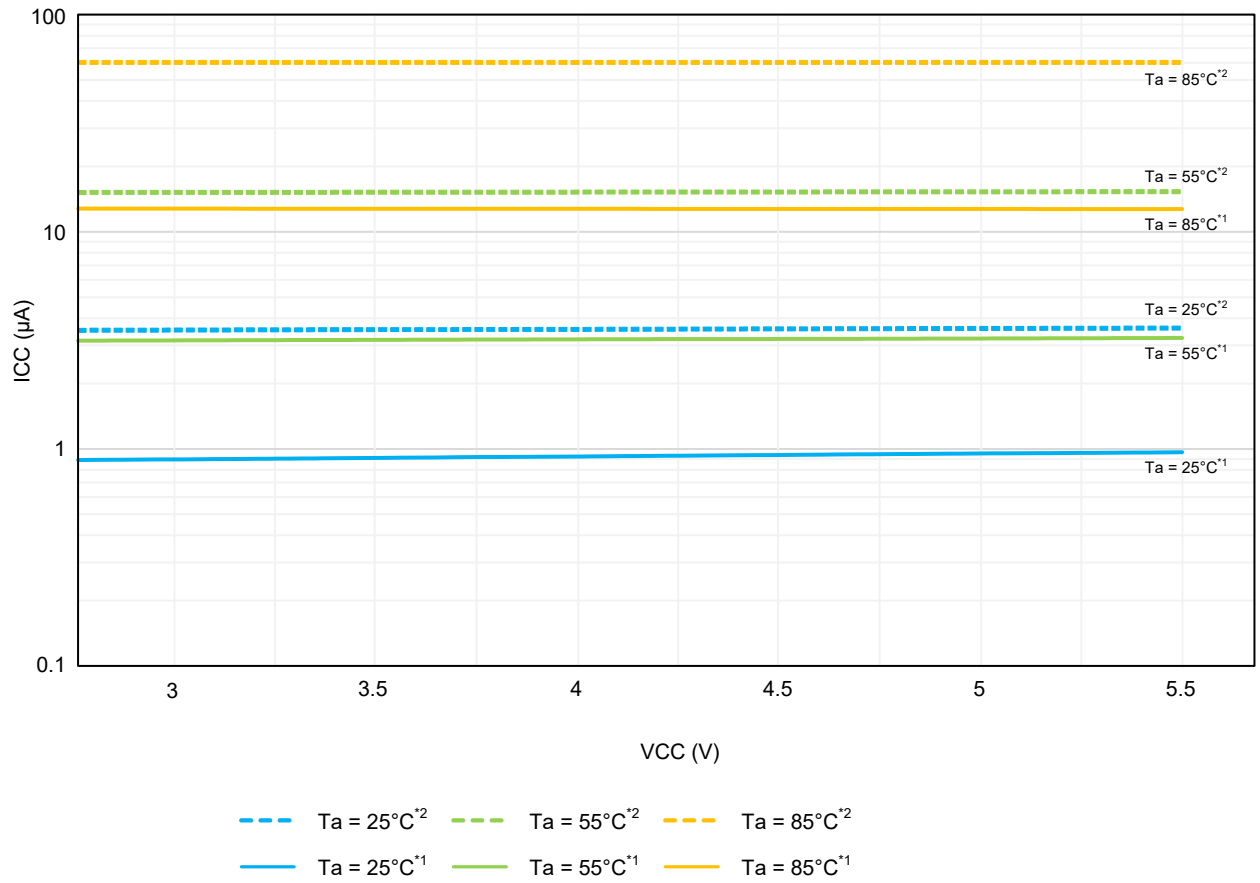

*1 Average value of the tested middle samples during product evaluation.
*2 Average value of the tested upper-limit samples during product evaluation.

Figure 5.1 Voltage Dependency in Software Standby Mode (Reference Data)

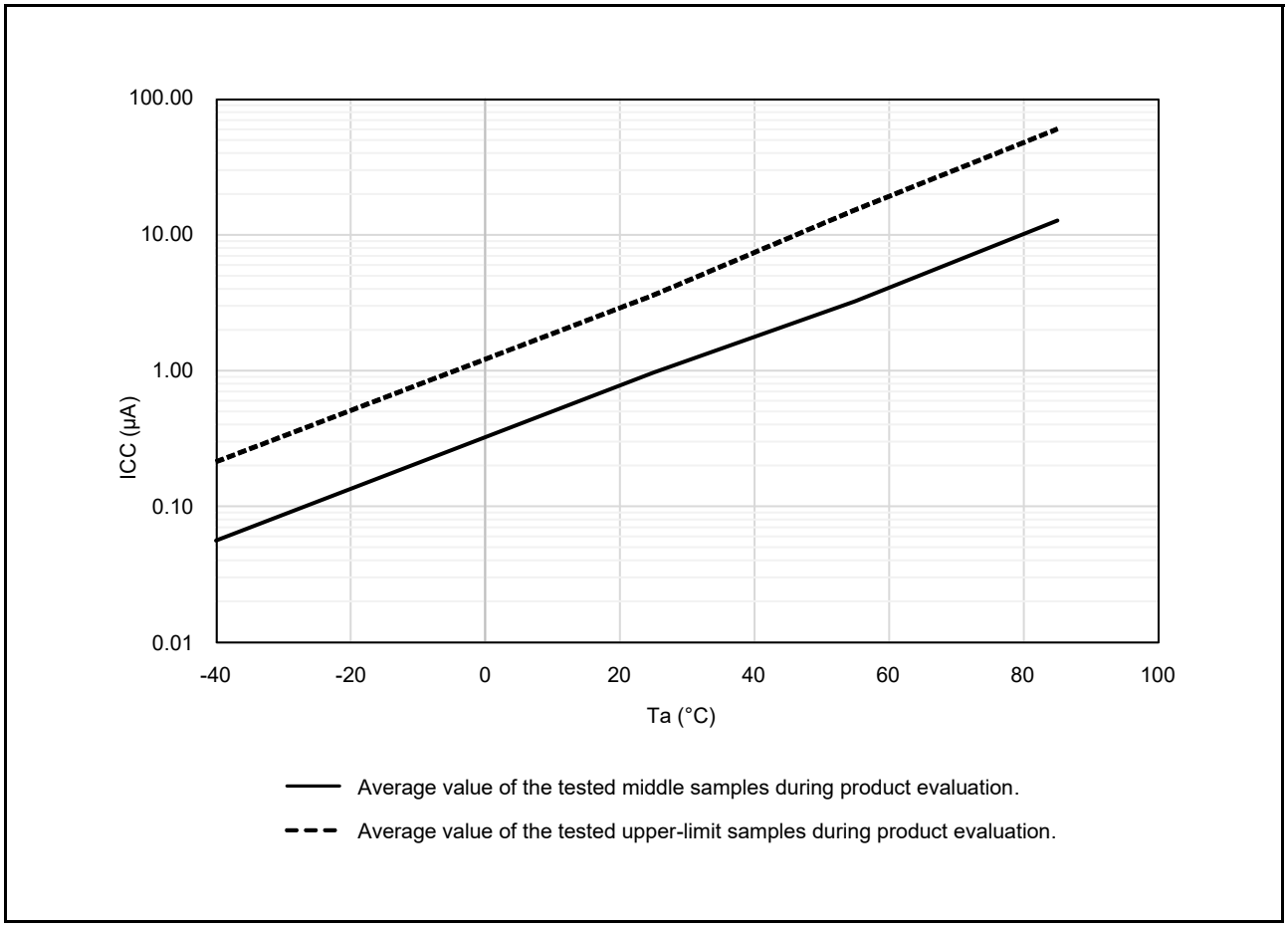

Figure 5.2 Temperature Dependency in Software Standby Mode (Reference Data)

Table 5.7 DC Characteristics (5)

Conditions: VCC = 2.7V to 5.5V, AVCC0 = AVCC1 = AVCC2 = VREFH0 = VREFH1 = VREFH2 = VCC to 5.5 V, VSS = AVSS0 = AVSS1 = AVSS2 = VREFL0 = VREFL1 = VREFL2 = 0V, T_a = –40 to +85°C

Item	Symbol	Typ.	Max.	Unit	Test Conditions
Permissible total consumption power*1	Pd	—	570	mW	

Note 1. Total power dissipated by the entire chip (including output currents)

Table 5.8 DC Characteristics (6)

Conditions: VCC = 2.7 V to 5.5 V, AVCC0 = AVCC1 = AVCC2 = VREFH0 = VREFH1 = VREFH2 = VCC to 5.5 V, VSS = AVSS0 = AVSS1 = AVSS2 = VREFL0 = VREFL1 = VREFL2 = 0V, T_a = –40 to +85°C

Item			Symbol	Min.	Typ.*2	Max.	Unit	Test Conditions
Analog power supply current	A/D unit 0	During A/D conversion (programmable gain amplifier in use)	I_{AVCC}	—	1.5	2.5	mA	
		During A/D conversion (programmable gain amplifier not in use)		—	1.0	1.8		
	A/D unit 1	During A/D conversion (sample-and-hold circuits in use, programmable gain amplifier in use)		—	4.6	6.9		
		During A/D conversion (sample-and-hold circuits in use, programmable gain amplifier not in use)		—	3.1	4.8		
		During A/D conversion (sample-and-hold circuits not in use, programmable gain amplifier in use)		—	2.5	3.9		
		During A/D conversion (sample-and-hold circuits not in use, programmable gain amplifier not in use)		—	1.0	1.8		
	A/D unit 2			—	1.0	1.8		
	During D/A conversion (per 1 channel)*1			—	0.7	1.0		
	Waiting for A/D or D/A conversion (all units)			—	—	2.2	μA	
Reference power supply current	During A/D conversion (at high-speed conversion per 1 unit)		I_{REFH}	—	10.0	20.0	μA	
	Waiting for A/D conversion (all units)			—	—	180.0	nA	
Comparator C operating current*3	Comparator enabled		I_{CMP}	—	40.0	60.0	μA	

Note 1. The value of the D/A converter is the value of the power supply current including the reference current.
Note 2. When VCC =AVCC0 = AVCC1 = AVCC2 = VREFH0 = VREFH1 = VREFH2 = 5 V.
Note 3. Current consumed only by the comparator C module.

Table 5.9 DC Characteristics (7)

Conditions: VCC = 0 V to AVCC0, AVCC0 = AVCC1 = AVCC2 = VREFH0 = VREFH1 = VREFH2 = 0 V to 5.5 V, VSS = AVSS0 = AVSS1 = AVSS2 = VREFL0 = VREFL1 = VREFL2 = 0 V, T_a = –40 to +85°C

Item		Symbol	Min.	Typ.	Max.	Unit	Test Conditions
Power-on VCC rising gradient	At normal startup	SrVCC	0.02	—	20	ms/V	
	Voltage monitoring 0 reset enabled at startup*1, *2		0.02	—	—		

Note 1. When OFS1.LVDAS = 0.
Note 2. Turn on the power supply voltage according to the normal startup rising gradient because the register settings set by OFS1 are not read in boot mode.

Table 5.10 DC Characteristics (8)

Conditions: VCC = 2.7 V to 5.5 V, AVCC0 = AVCC1 = AVCC2 = VREFH0 = VREFH1 = VREFH2 = VCC to 5.5 V,
VSS = AVSS0 = AVSS1 = AVSS2 = VREFL0 = VREFL1 = VREFL2 = 0 V, T_a = –40 to +85°C

The ripple voltage must meet the allowable ripple frequency $f_{r\ (VCC)}$ within the range between the VCC upper limit (5.5 V) and lower limit (2.7 V). When VCC change exceeds VCC ±10%, the allowable voltage change rising/falling gradient dt/dVCC must be met.

Item	Symbol	Min.	Typ.	Max.	Unit	Test Conditions
Allowable ripple frequency	$f_{r\ (VCC)}$	—	—	10	kHz	Figure 5.3 $V_{r\ (VCC)}$ ≤ VCC × 0.2
		—	—	1	MHz	Figure 5.3 $V_{r\ (VCC)}$ ≤ VCC × 0.08
		—	—	10	MHz	Figure 5.3 $V_{r\ (VCC)}$ ≤ VCC × 0.06
Allowable voltage change rising/falling gradient	dt/dVCC	1.0	—	—	ms/V	When VCC change exceeds VCC ±10%

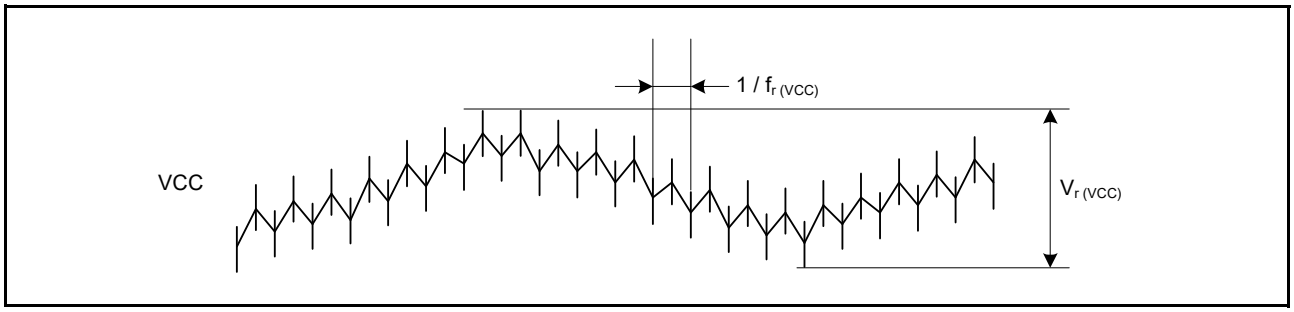

Figure 5.3 Ripple Waveform

Table 5.11 DC Characteristics (9)

Conditions: VCC = 2.7 V to 5.5 V, AVCC0 = AVCC1 = AVCC2 = VREFH0 = VREFH1 = VREFH2 = VCC to 5.5 V,
VSS = AVSS0 = AVSS1 = AVSS2 = VREFL0 = VREFL1 = VREFL2 = 0 V, T_a = –40 to +85°C

Item	Symbol	Min.	Typ.	Max.	Unit	Test Conditions
Permissible error of VCL pin external capacitance	C_{VCL}	3.3	4.7	6.1	μF	

Note: The recommended capacitance is 4.7 μF. Variations in connected capacitors should be within the above range.

Table 5.12 Permissible Output Currents

Conditions: VCC = 2.7 V to 5.5 V, AVCC0 = AVCC1 = AVCC2 = VREFH0 = VREFH1 = VREFH2 = VCC to 5.5 V, VSS = AVSS0 = AVSS1 = AVSS2 = VREFL0 = VREFL1 = VREFL2 = 0 V, T_a = –40 to +85°C

Item			Symbol	Max.	Unit
Permissible output low current	Ports 71 to 76, port 81, ports 90 to 95, port B5, port D3		I_{OL}	10.0	mA
	RIIC pins			6.0	
	Ports other than above	Normal output mode		4.0	
		High-drive output mode		8.0	
Permissible output low current	Total of all output pins		ΣI_{OL}	110.0	
	Total of ports 40 to 47, ports 50 to 55, ports 60 to 65			50.0	
	Total of port 02, ports E5 and E6, ports 10 to 17, ports 80 to 84			50.0	
	Total of ports B4 to B7, ports F0 to F3, ports D0 to D7, ports E0 and E1			55.0	
	Total of port 96, ports 34 and 35, ports A0 to A7, ports B0 to B3, ports C0 to C2, ports C5 and C6			90.0	
	Total of ports 71 to 76			30.0	
	Total of ports 90 to 95			30.0	
	Total of ports 31 to 33, ports G0 to G2, port 70			32.0	
	Total of ports 20 to 27, port 30, ports C3 and C4			50.0	
Permissible output high current	Ports 71 to 76, port 81, ports 90 to 95, port B5, port D3		I_{OH}	–5.0	
	Ports other than above	Normal output mode		–4.0	
		High-drive output mode		–8.0	
Permissible output high current	Total of all output pins		ΣI_{OH}	–35.0	
	Total of ports 40 to 47, ports 50 to 55, ports 60 to 65			–25.0	

Note: Do not exceed the permissible total supply current.

Table 5.13 Output Values of Voltage

Conditions: VCC = 2.7 V to 5.5 V, AVCC0 = AVCC1 = AVCC2 = VREFH0 = VREFH1 = VREFH2 = VCC to 5.5 V, VSS = AVSS0 = AVSS1 = AVSS2 = VREFL0 = VREFL1 = VREFL2 = 0 V, T_a = –40 to +85°C

Item			Symbol	Min.	Max.	Unit	Test Conditions
Output low	Ports 71 to 76, port 81, ports 90 to 95, port B5, port D3		V_{OL}	—	0.8	V	I_{OL} = 10.0 mA
	RIIC pins	Standard mode		—	0.4		I_{OL} = 3.0 mA
		Fast mode		—	0.6		I_{OL} = 6.0 mA
	Ports other than above	Normal output mode		—	0.8		I_{OL} = 1.0 mA
		High-drive output mode		—	0.8		I_{OL} = 2.0 mA
Output high	Ports 71 to 76, port 81, ports 90 to 95, port B5, port D3		V_{OH}	VCC – 0.8	—	V	I_{OH} = –5.0 mA
	Ports 40 to 47, ports 50 to 55, ports 60 to 65			AVCC2 – 0.8	—		I_{OH} = –2.0 mA
	Ports other than above	Normal output mode		VCC – 0.8	—		I_{OH} = –2.0 mA
		High-drive output mode		VCC – 0.8	—		I_{OH} = –4.0 mA

5.2.1 Normal I/O Pin Output Characteristics (1)

Figure 5.4 to Figure 5.7 show the characteristics when normal output is selected by the drive capacity control register.

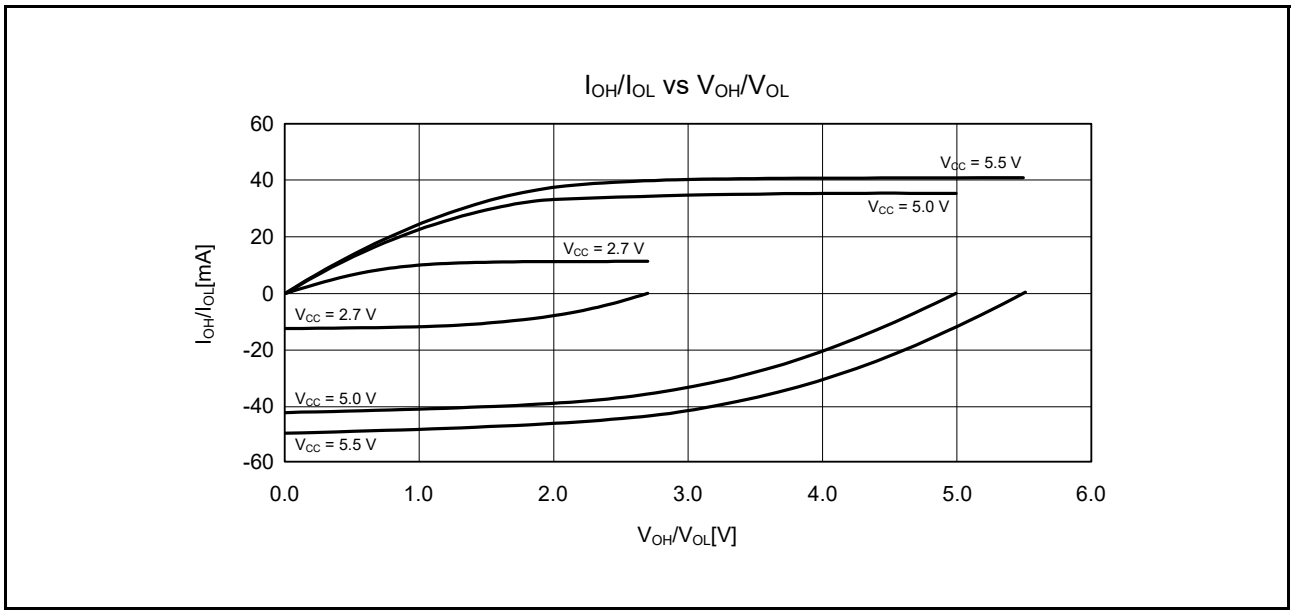

Figure 5.4 **V_{OH}/V_{OL} and I_{OH}/I_{OL} Voltage Characteristics at T_a = 25°C When Normal Output is Selected (Reference Data)**

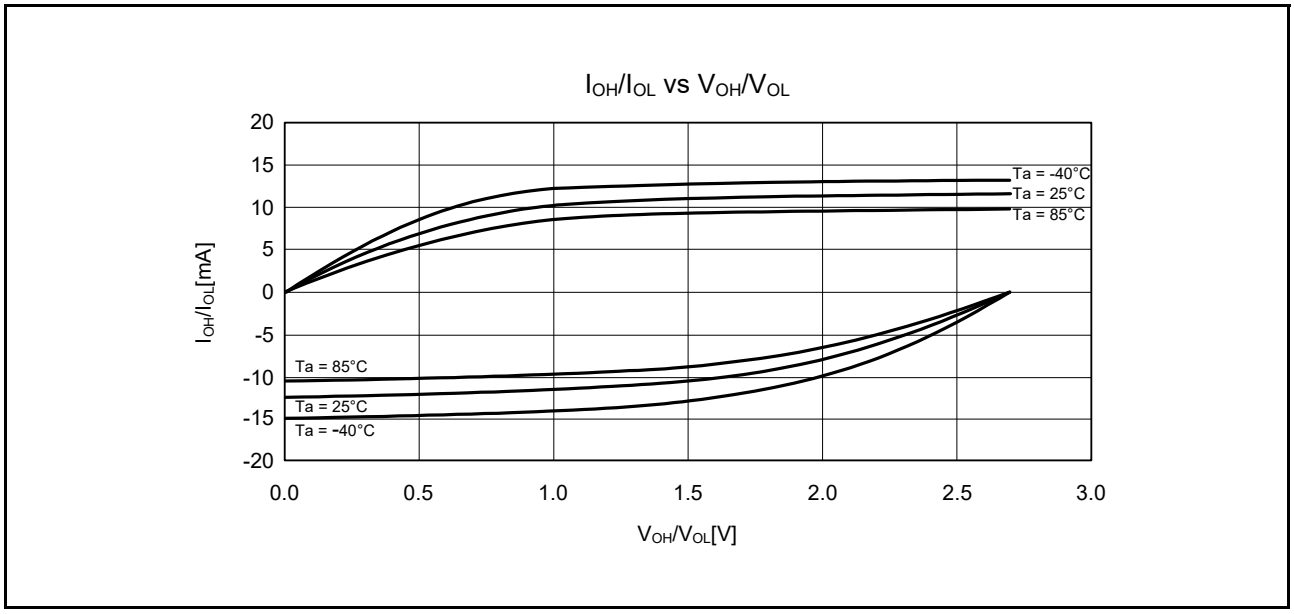

Figure 5.5 **V_{OH}/V_{OL} and I_{OH}/I_{OL} Temperature Characteristics at VCC = 2.7 V when Normal Output is Selected (Reference Data)**

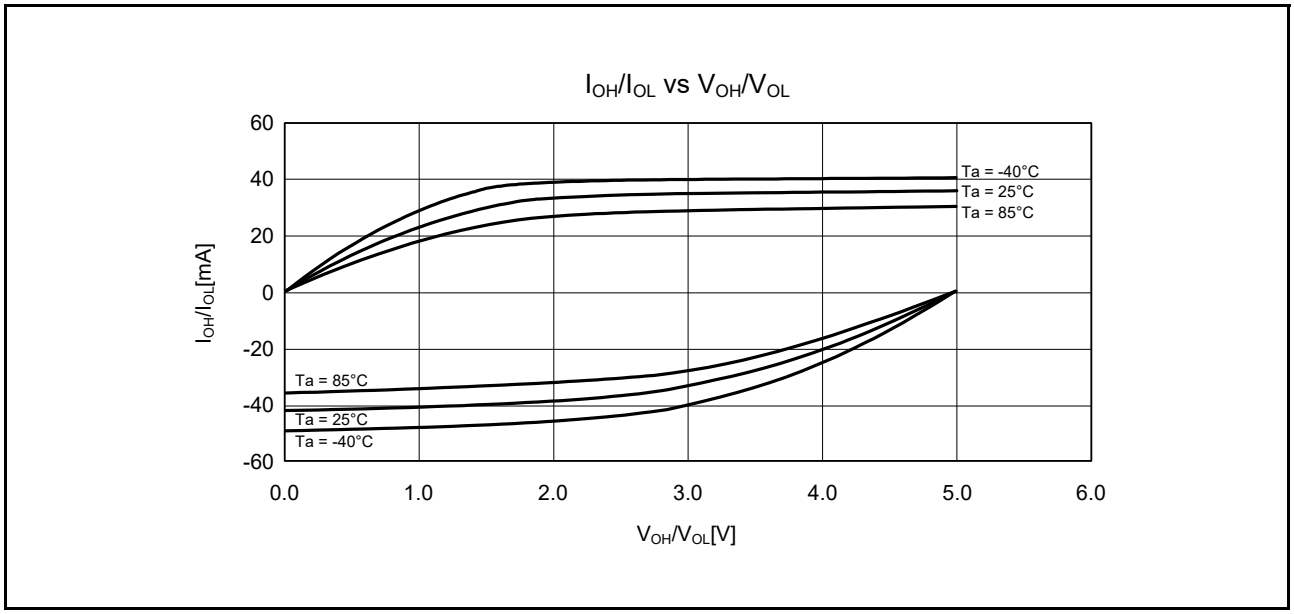

Figure 5.6 **V_{OH}/V_{OL} and I_{OH}/I_{OL} Temperature Characteristics at VCC = 5.0 V when Normal Output is Selected (Reference Data)**

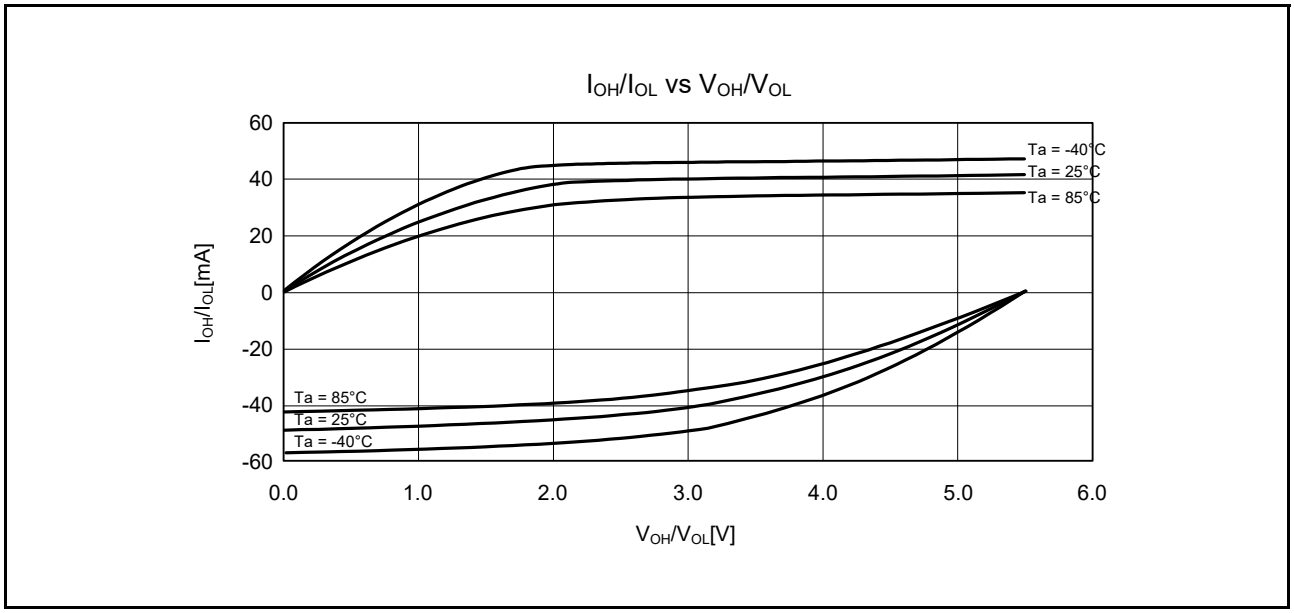

Figure 5.7 **V_{OH}/V_{OL} and I_{OH}/I_{OL} Temperature Characteristics at VCC = 5.5 V when Normal Output is Selected (Reference Data)**

5.2.2 Standard I/O Pin Output Characteristics (2)

Figure 5.8 to Figure 5.11 show the characteristics when high-drive output is selected by the drive capacity control register.

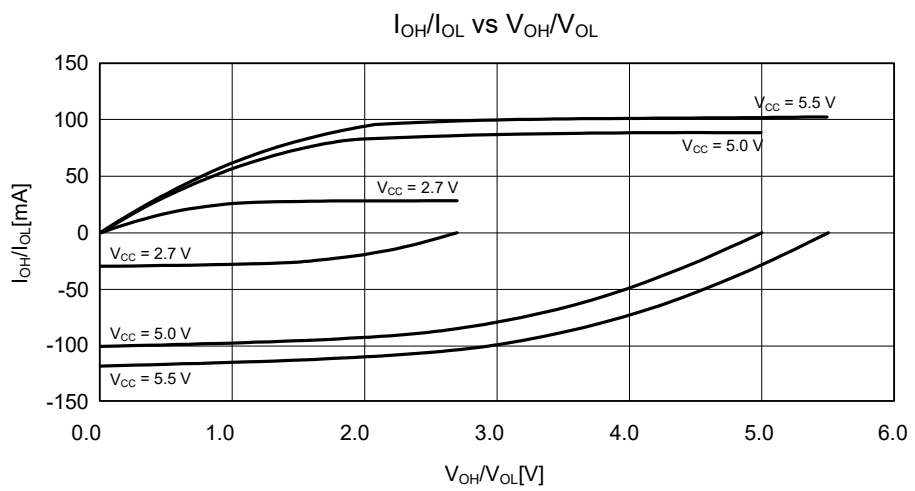

Figure 5.8 **V_{OH}/V_{OL} and I_{OH}/I_{OL} Voltage Characteristics at T_a = 25°C When Normal Output is Selected (Reference Data)**

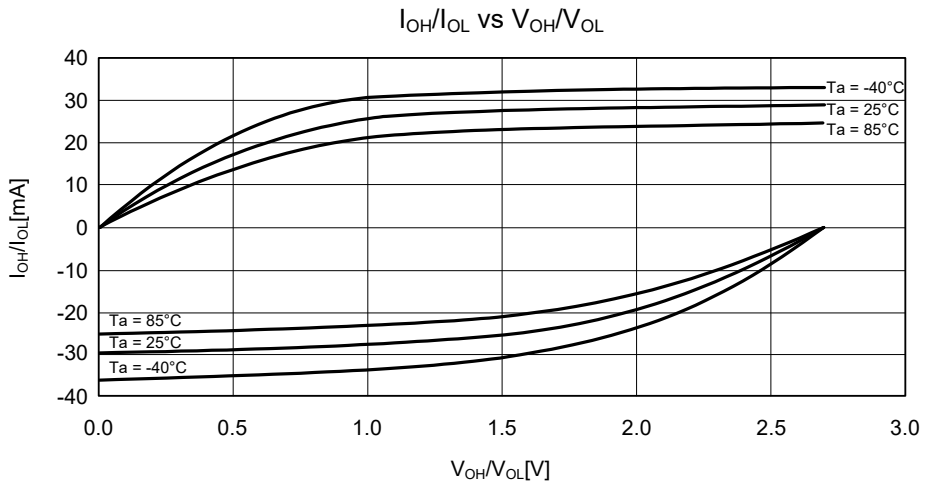

Figure 5.9 **V_{OH}/V_{OL} and I_{OH}/I_{OL} Temperature Characteristics at VCC = 2.7 V when Normal Output is Selected (Reference Data)**

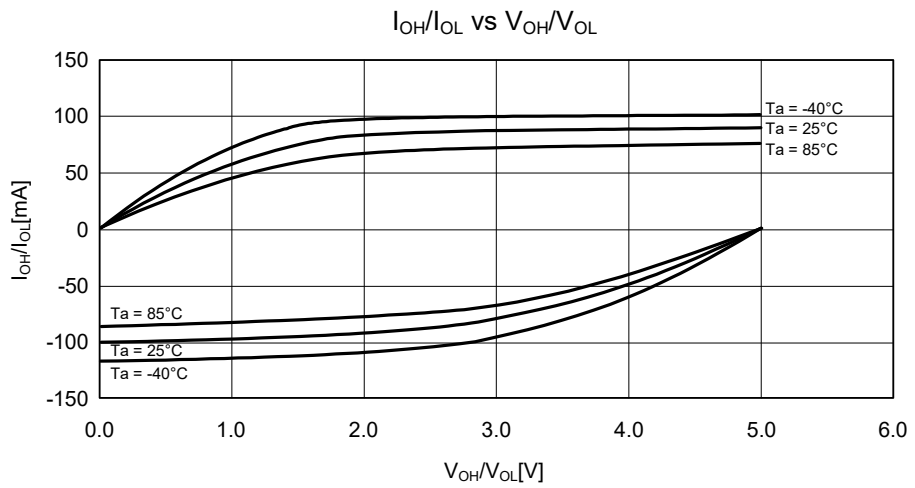

Figure 5.10 **V_{OH}/V_{OL} and I_{OH}/I_{OL} Temperature Characteristics at VCC = 5.0 V when Normal Output is Selected (Reference Data)**

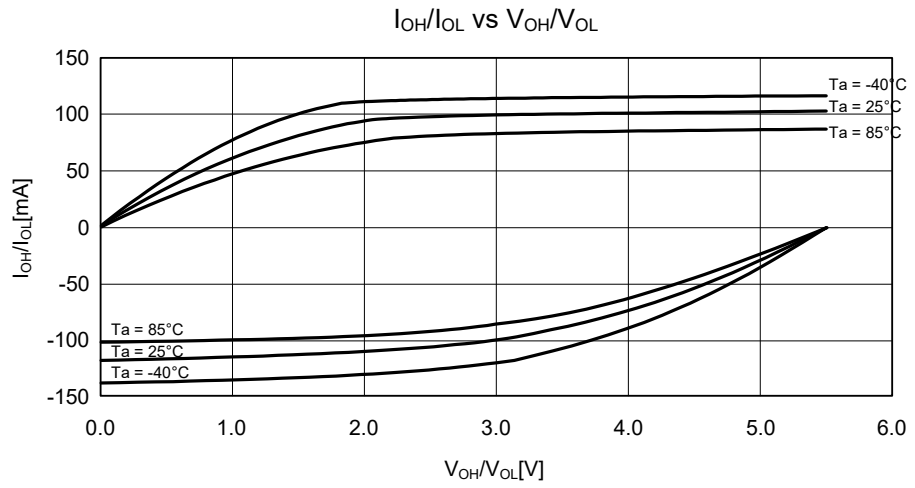

Figure 5.11 **V_{OH}/V_{OL} and I_{OH}/I_{OL} Temperature Characteristics at VCC = 5.5 V when Normal Output is Selected (Reference Data)**

5.2.3 Standard I/O Pin Output Characteristics (3)

Figure 5.12 to Figure 5.15 show the output characteristics of the large current ports.

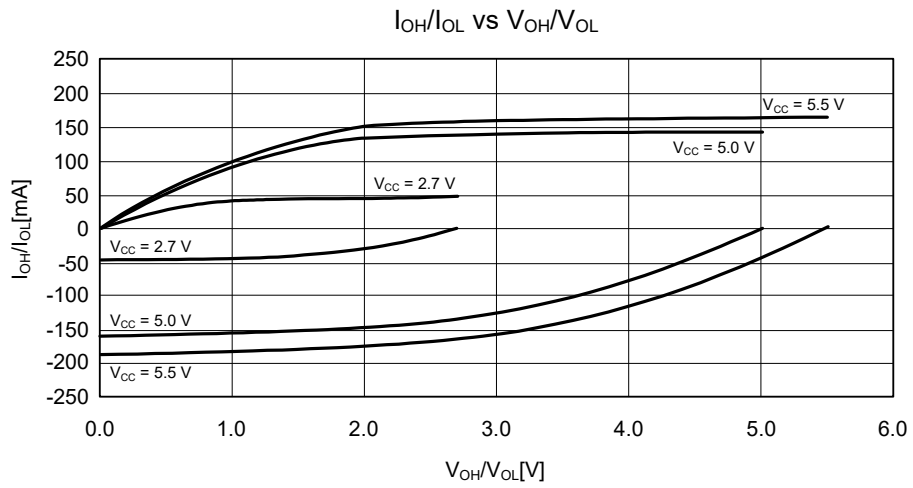

Figure 5.12 V_{OH}/V_{OL} and I_{OH}/I_{OL} Voltage Characteristics of Large Current Ports at T_a = 25°C (Reference Data)

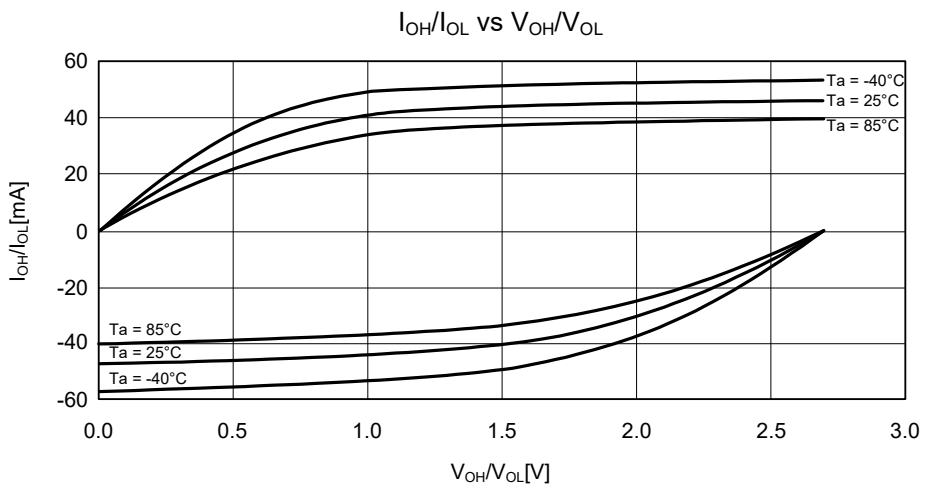

Figure 5.13 V_{OH}/V_{OL} and I_{OH}/I_{OL} Temperature Characteristics of Large Current Ports at VCC = 2.7 V (Reference Data)

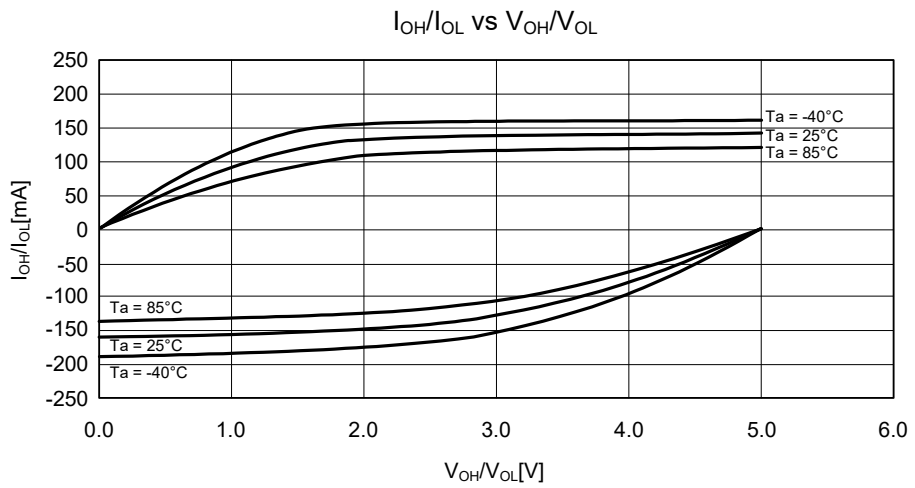

Figure 5.14 **V_{OH}/V_{OL} and I_{OH}/I_{OL} Temperature Characteristics of Large Current Ports at VCC = 5.0 V (Reference Data)**

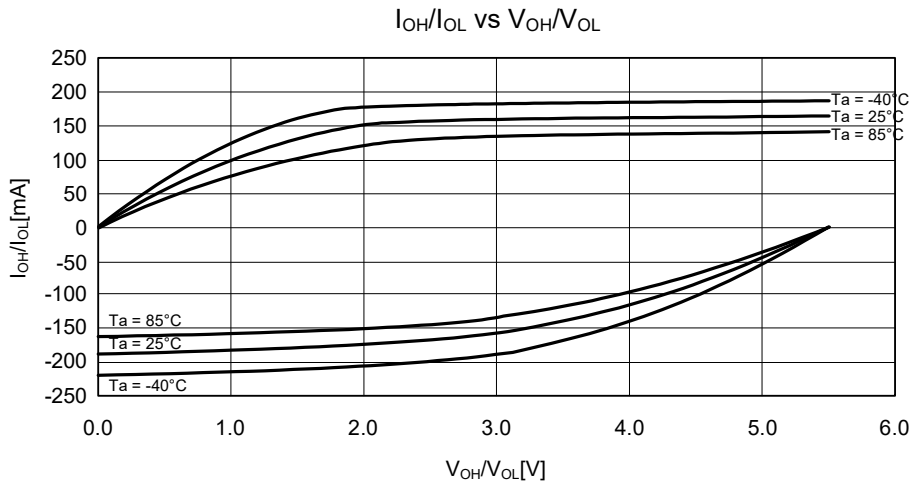

Figure 5.15 **V_{OH}/V_{OL} and I_{OH}/I_{OL} Temperature Characteristics of Large Current Ports at VCC = 5.5 V (Reference Data)**

5.2.4 RIIC Pin Output Characteristics

Figure 5.16 to Figure 5.19 show the output characteristics of the RIIC pin.

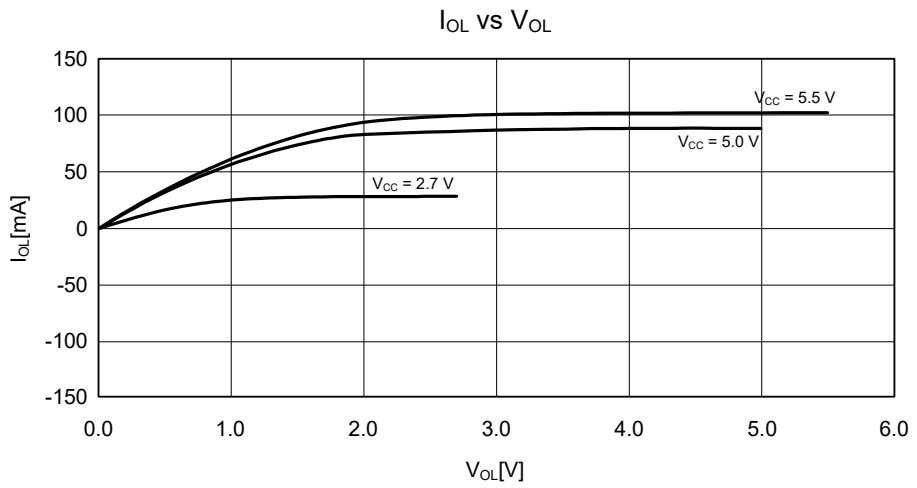

Figure 5.16 V_{OL} and I_{OL} Voltage Characteristics of RIIC Output Pin at T_a = 25°C (Reference Data)

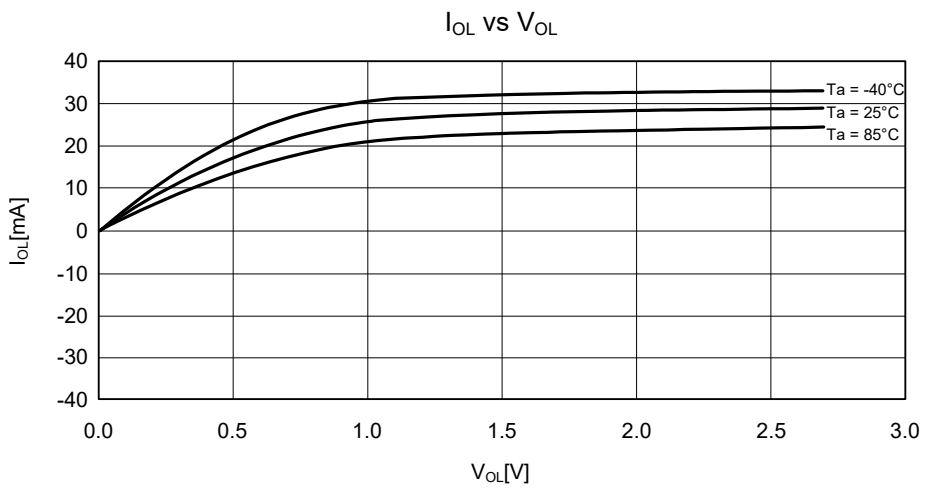

Figure 5.17 V_{OL} and I_{OL} Temperature Characteristics of RIIC Output Pin at VCC = 2.7 V (Reference Data)

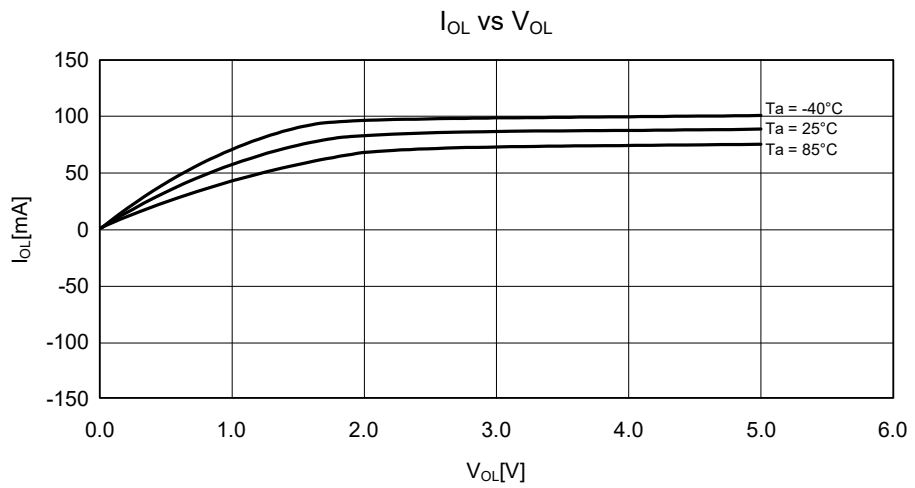

Figure 5.18 V_{OL} and I_{OL} Temperature Characteristics of RIIC Output Pin at VCC = 5.0 V (Reference Data)

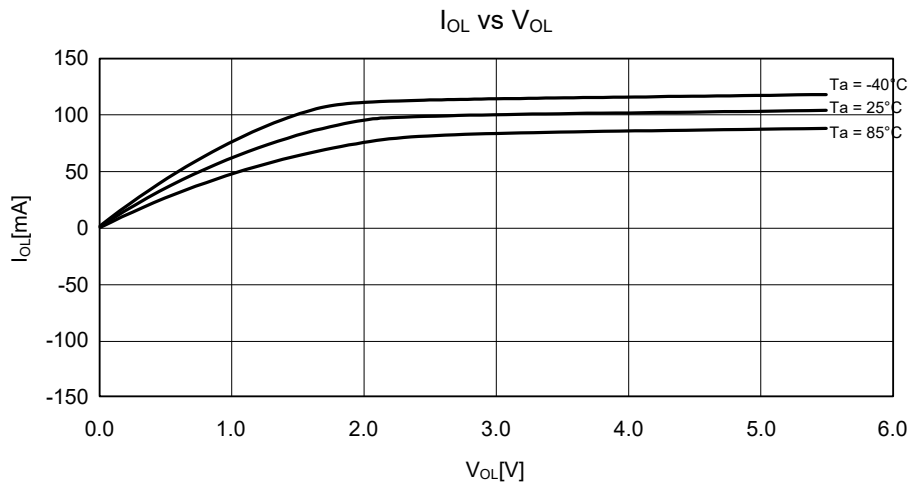

Figure 5.19 V_{OL} and I_{OL} Temperature Characteristics of RIIC Output Pin at VCC = 5.5 V (Reference Data)

5.3 AC Characteristics

5.3.1 Clock Timing

Table 5.14 Operating Frequency Value (High-Speed Operating Mode)

Conditions: VCC = 2.7 V to 5.5 V, AVCC0 = AVCC1 = AVCC2 = VREFH0 = VREFH1 = VREFH2 = VCC to 5.5 V, VSS = AVSS0 = AVSS1 = AVSS2 = VREFL0 = VREFL1 = VREFL2 = 0 V, T_a = –40 to +85°C

Item		Symbol	min.	typ.	max.	Unit
Operating frequency	System clock (ICLK)	f_{max}	—	—	80	MHz
	FlashIF clock (FCLK)*1, *2		—	—	32	
	Peripheral module clock (PCLKA)		—	—	80	
	Peripheral module clock (PCLKB)		—	—	40	
	Peripheral module clock (PCLKD)		—	—	40	

Note 1. The lower-limit frequency of FCLK is 1 MHz during programming or erasing of the flash memory. When using FCLK at below 4 MHz, the frequency can be set to 1 MHz, 2 MHz, or 3 MHz. A non-integer frequency such as 1.5 MHz cannot be set.

Note 2. The frequency accuracy of FCLK should be ±3.5%.

Table 5.15 Operating Frequency Value (Middle-Speed Operating Mode)

Conditions: VCC = 2.7 V to 5.5 V, AVCC0 = AVCC1 = AVCC2 = VREFH0 = VREFH1 = VREFH2 = VCC to 5.5 V, VSS = AVSS0 = AVSS1 = AVSS2 = VREFL0 = VREFL1 = VREFL2 = 0 V, T_a = –40 to +85°C

Item		Symbol	min.	typ.	max.	Unit
Operating frequency	System clock (ICLK)	f_{max}	—	—	12	MHz
	FlashIF clock (FCLK)*1, *2		—	—	12	
	Peripheral module clock (PCLKA)		—	—	12	
	Peripheral module clock (PCLKB)		—	—	12	
	Peripheral module clock (PCLKD)		—	—	12	

Note 1. The lower-limit frequency of FCLK is 1 MHz during programming or erasing of the flash memory. When using FCLK at below 4 MHz, the frequency can be set to 1 MHz, 2 MHz, or 3 MHz. A non-integer frequency such as 1.5 MHz cannot be set.

Note 2. The frequency accuracy of FCLK should be ±3.5%.

Table 5.16 Clock Timing

Conditions: VCC = 2.7 V to 5.5 V, AVCC0 = AVCC1 = AVCC2 = VREFH0 = VREFH1 = VREFH2 = VCC to 5.5 V, VSS = AVSS0 = AVSS1 = AVSS2 = VREFL0 = VREFL1 = VREFL2 = 0 V, T_a = –40 to +85°C

Item	Symbol	Min.	Typ.	Max.	Unit	Test Conditions
EXTAL external clock input cycle time	t_{Xcyc}	50	—	—	ns	Figure 5.20
EXTAL external clock input high pulse width	t_{XH}	20	—	—	ns	
EXTAL external clock input low pulse width	t_{XL}	20	—	—	ns	
EXTAL external clock rise time	t_{Xr}	—	—	5	ns	
EXTAL external clock fall time	t_{Xf}	—	—	5	ns	
EXTAL external clock input wait time*1	t_{XWT}	0.5	—	—	μs	
Main clock oscillator oscillation frequency	f_{MAIN}	1	—	20	MHz	
Main clock oscillation stabilization time (crystal)*2	$t_{MAINOSC}$	—	3	—	ms	Figure 5.21
Main clock oscillation stabilization time (ceramic resonator)*2	$t_{MAINOSC}$	—	50	—	μs	
LOCO clock oscillation frequency	f_{LOCO}	3.44	4.0	4.56	MHz	
LOCO clock oscillation stabilization time	t_{LOCO}	—	—	0.5	μs	Figure 5.22
HOCO clock oscillation frequency	f_{HOCO} (32 MHz)	31.52	32	32.48	MHz	T_a = –40 to –20°C
		31.68	32	32.32	MHz	T_a = –20 to +75°C
		31.52	32	32.48	MHz	T_a = +75 to +85°C
	f_{HOCO} (64 MHz)	63.04	64	64.96	MHz	T_a = –40 to –20°C
		63.36	64	64.64	MHz	T_a = –20 to +75°C
		63.04	64	64.96	MHz	T_a = +75 to +85°C
HOCO clock oscillation stabilization time	t_{HOCO} (32 MHz)	—	—	37.1	μs	Figure 5.24
	t_{HOCO} (64 MHz)	—	—	80.6	μs	Figure 5.24
IWDT-dedicated clock oscillation frequency	f_{ILOCO}	12.75	15	17.25	kHz	
IWDT-dedicated clock oscillation stabilization time	t_{ILOCO}	—	—	50	μs	Figure 5.25
PLL circuit oscillation frequency	f_{PLL}	40	—	80	MHz	
PLL clock oscillation stabilization time	t_{PLL}	—	—	50	μs	Figure 5.26
PLL free-running oscillation frequency	f_{PLLFR}	—	8	—	MHz	

Note 1. Time until the clock can be used after the main clock oscillator stop bit (MOSCCR.MOSTP) is set to 0 (operating) when the external clock is stable.

Note 2. Reference values when an 8 MHz resonator is used.
When specifying the main clock oscillator stabilization time, set the MOSCWTCR register with a stabilization time value that is equal to or greater than the resonator-manufacturer-recommended value.
After changing the setting of the MOSCCR.MOSTP bit so that the main clock oscillator operates, read the OSCOVFSR.MOOVF flag to confirm that is has become 1, and then start using the main clock.

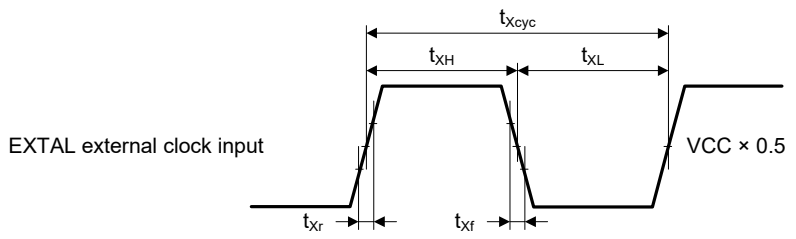

Figure 5.20 EXTAL External Clock Input Timing

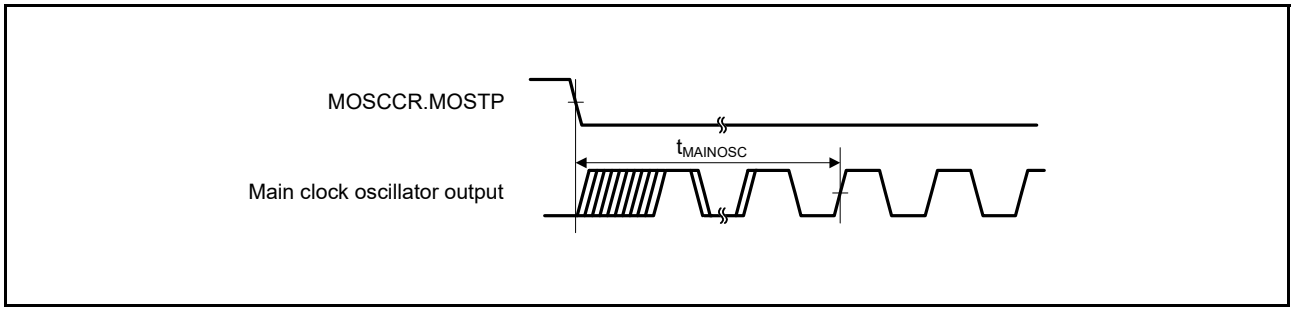

Figure 5.21 Main Clock Oscillation Start Timing

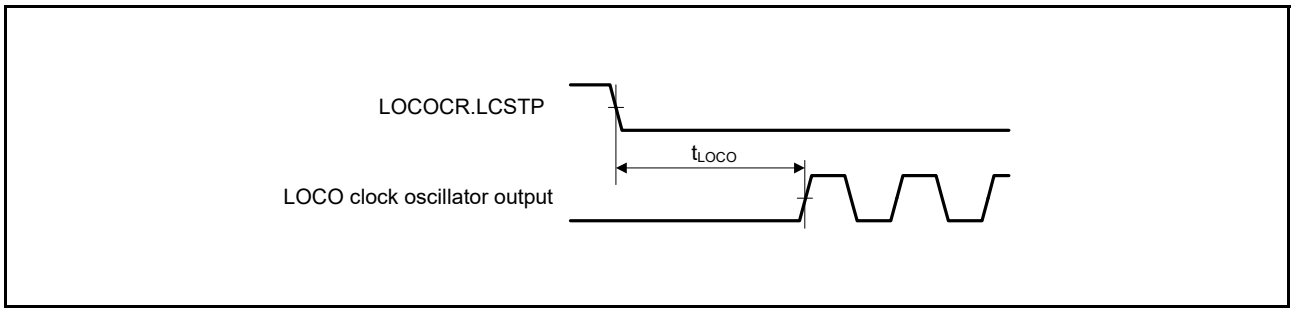

Figure 5.22 LOCO Clock Oscillation Start Timing

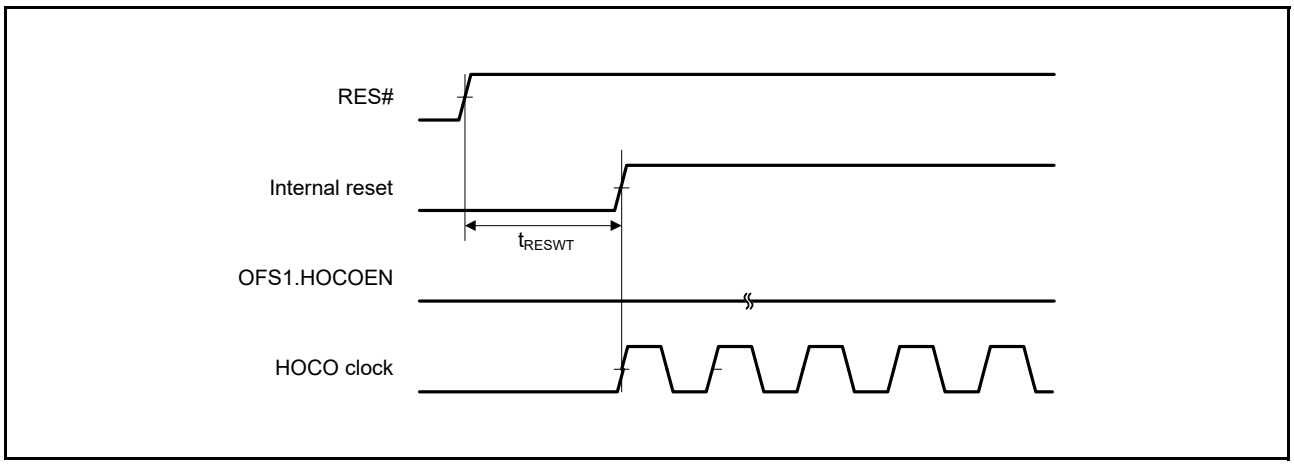

Figure 5.23 HOCO Clock Oscillation Start Timing (After Reset is Canceled by Setting OFS1.HOCOEN Bit to 0)

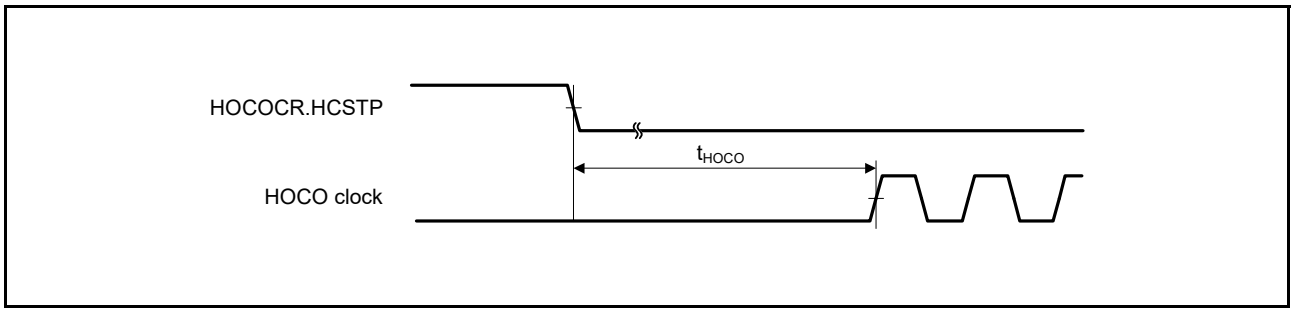

Figure 5.24 HOCO Clock Oscillation Start Timing (Oscillation is Started by Setting HOCOCR.HCSTP Bit)

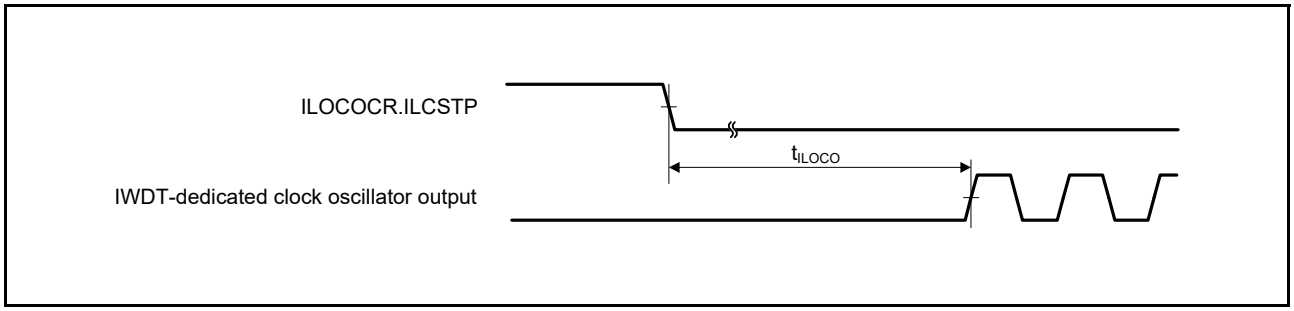

Figure 5.25 IWDT-Dedicated Clock Oscillation Start Timing

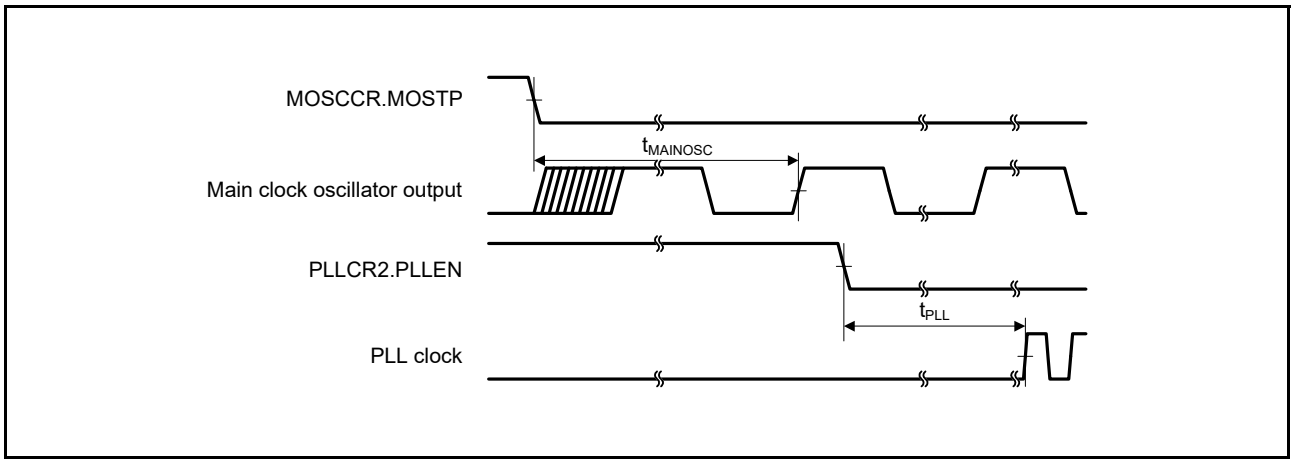

Figure 5.26 PLL Clock Oscillation Start Timing (PLL is Operated after Main Clock Oscillation Has Settled)

5.3.2 Reset Timing

Table 5.17 Reset Timing

Conditions: VCC = 2.7 V to 5.5 V, AVCC0 = AVCC1 = AVCC2 = VREFH0 = VREFH1 = VREFH2 = VCC to 5.5 V, VSS = AVSS0 = AVSS1 = AVSS2 = VREFL0 = VREFL1 = VREFL2 = 0 V, T_a = –40 to +85°C

Item		Symbol	Min.	Typ.	Max.	Unit	Test Conditions
RES# pulse width	At power-on	t_{RESWP}	3	—	—	ms	Figure 5.27
	Other than above	t_{RESW}	30	—	—	μs	Figure 5.28
Wait time after RES# cancellation (at power-on)		t_{RESWT}	—	27.5	—	ms	Figure 5.27
Wait time after RES# cancellation (during powered-on state)		t_{RESWT}	—	114	—	μs	Figure 5.28
Independent watchdog timer reset period		t_{RESWIW}	—	1	—	IWDT clock cycle	Figure 5.29
Software reset period		t_{RESWSW}	—	1	—	ICLK cycle	
Wait time after independent watchdog timer reset cancellation*1		t_{RESW2}	—	300	—	μs	
Wait time after software reset cancellation		t_{RESW2}	—	168	—	μs	

Note 1. When IWDTCR.CKS[3:0] = 0000b.

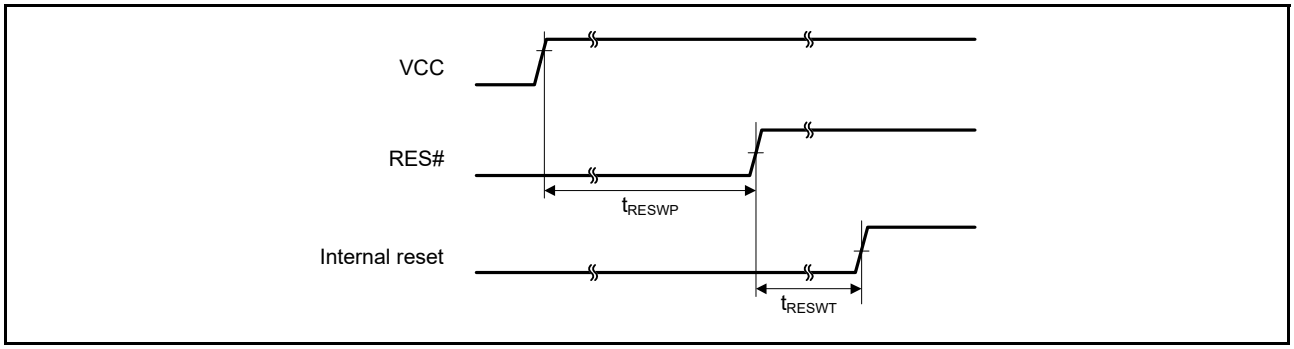

Figure 5.27 Reset Input Timing at Power-On

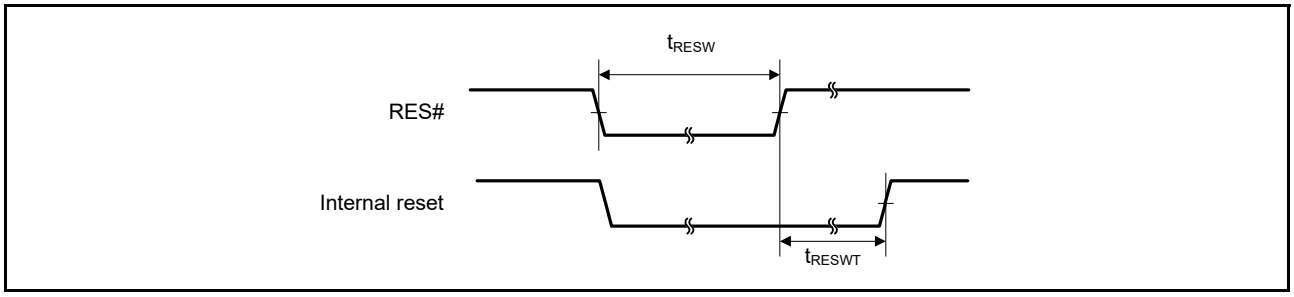

Figure 5.28 Reset Input Timing (1)

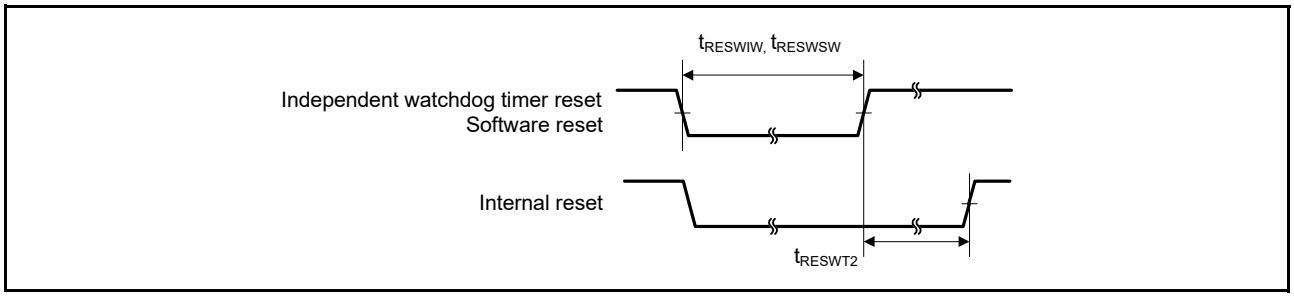

Figure 5.29 Reset Input Timing (2)

5.3.3 Timing of Recovery from Low Power Consumption Modes

Table 5.18 Timing of Recovery from Low Power Consumption Modes (1)

Conditions: VCC = 2.7 V to 5.5 V, AVCC0 = AVCC1 = AVCC2 = VREFH0 = VREFH1 = VREFH2 = VCC to 5.5 V, VSS = AVSS0 = AVSS1 = AVSS2 = VREFL0 = VREFL1 = VREFL2 = 0 V, T_a = –40 to +85°C

Item				Symbol	Min.	Typ.	Max.	Unit	Test Conditions
Recovery time from software standby mode*1	High-speed mode	Crystal connected to main clock oscillator	Main clock oscillator operating*2	t_{SBYMC}	—	2	3	ms	Figure 5.30
			Main clock oscillator and PLL circuit operating*3	t_{SBYPC}	—	2	3	ms	
		External clock input to main clock oscillator	Main clock oscillator operating*4	t_{SBYEX}	—	35	50	μs	
			Main clock oscillator and PLL circuit operating*5	t_{SBYPE}	—	70	95	μs	
		HOCO clock operation	HOCO clock oscillator operation 1 *6	t_{SBYHO}	—	40	55	μs	
			HOCO clock oscillator operation 2 *7		—	75	90	μs	
			HOCO clock oscillator, PLL circuit operation*8	t_{SBYPH}	—	110	130	μs	
		LOCO clock oscillator operating*9		t_{SBYLO}	—	40	55	μs	

Note 1. The recovery time varies depending on the state of each oscillator when the WAIT instruction is executed. The recovery time when multiple oscillators are operating varies depending on the operating state of the oscillators that are not selected as the system clock source. The above table applies when only the corresponding clock is operating.

Note 2. When the frequency of crystal is 20 MHz.
When the main clock oscillator wait control register (MOSCWTCR) is set to 04h.
When the frequencies of ICLK, FCLK, PCLKA, PCLKB, and PCLKD are not divided.

Note 3. When the frequency of PLL is 80 MHz.
When the main clock oscillator wait control register (MOSCWTCR) is set to 04h.
When the frequencies of ICLK and PCLKA are set to 80 MHz, PCLKB and PCLKD are set to 40 MHz, and FCLK is set to 20 MHz.

Note 4. When the frequency of the external clock is 20 MHz.
When the frequencies of ICLK, FCLK, PCLKA, PCLKB, and PCLKD are not divided.

Note 5. When the frequency of PLL is 80 MHz.
When the main clock oscillator wait control register (MOSCWTCR) is set to 00h.
When the frequencies of ICLK and PCLKA are set to 80 MHz, PCLKB and PCLKD are set to 40 MHz, and FCLK is set to 20 MHz.

Note 6. When the frequency of the high-speed on-chip oscillator is 32 MHz. When the high-speed on-chip oscillator wait control register (HOCOWTCR) is set to 05h. When the frequencies of ICLK, FCLK, PCLKA, PCLKB, and PCLKD are not divided.

Note 7. When the frequency of the high-speed on-chip oscillator is 64 MHz. Set the high-speed on-chip oscillator wait control register (HOCOWTCR) is set to 06h. When the frequencies of ICLK and PCLKA are set to 64 MHz, and the frequencies of PCLKB, PCLKD, and FCLK are set to 32 MHz.

Note 8. When the frequency of the high-speed on-chip oscillator is 32 MHz, and the frequency of PLL is 80 MHz. When the high-speed on-chip oscillator wait control register (HOCOWTCR) is set to 05h. When the frequencies of ICLK and PCLKA are set to 80 MHz, the frequencies of PCLKB and PCLKD are set to 40 MHz, and the frequency of FCLK is set to 20MHz.

Note 9. When the frequencies of ICLK, FCLK, PCLKA, PCLKB, and PCLKD are not divided.

Table 5.19 Timing of Recovery from Low Power Consumption Modes (2)

Conditions: VCC = 2.7 V to 5.5 V, AVCC0 = AVCC1 = AVCC2 = VREFH0 = VREFH1 = VREFH2 = VCC to 5.5 V, VSS = AVSS0 = AVSS1 = AVSS2 = VREFL0 = VREFL1 = VREFL2 = 0 V, T_a = –40 to +85°C

Item				Symbol	Min.	Typ.	Max.	Unit	Test Conditions
Recovery time from software standby mode*1	Middle-speed mode	Crystal connected to main clock oscillator	Main clock oscillator operating*2	t_{SBYMC}	—	2	3	ms	Figure 5.30
			Main clock oscillator and PLL circuit operating*3	t_{SBYPC}	—	2	3	ms	
		External clock input to main clock oscillator	Main clock oscillator operating*4	t_{SBYEX}	—	3	4	μs	
			Main clock oscillator and PLL circuit operating*5	t_{SBYPE}	—	65	85	μs	
		HOCO clock oscillator operating	HOCO clock oscillator operating 1 *6	t_{SBYHO}	—	40	50	μs	
			HOCO clock oscillator operating 2 *7		—	75	85	μs	
			HOCO clock oscillator and PLL circuit operating*8	t_{SBYPH}	—	110	125	μs	
		LOCO clock oscillator operating*9		t_{SBYLO}	—	5	7	μs	

Note 1. The recovery time varies depending on the state of each oscillator when the WAIT instruction is executed. The recovery time when multiple oscillators are operating varies depending on the operating state of the oscillators that are not selected as the system clock source. The above table applies when only the corresponding clock is operating.

Note 2. When the frequency of the crystal is 12 MHz.
When the main clock oscillator wait control register (MOSCWTCR) is set to 04h.
When the frequencies of ICLK, FCLK, PCLKA, PCLKB, and PCLKD are not divided.

Note 3. When the frequency of PLL is 48 MHz.
When the main clock oscillator wait control register (MOSCWTCR) is set to 04h.
When the frequencies of ICLK, FCLK, PCLKA, PCLKB, and PCLKD are set to 12 MHz.

Note 4. When the frequency of the external clock is 12 MHz.
When the frequencies of ICLK, FCLK, PCLKA, PCLKB, and PCLKD are not divided.

Note 5. When the frequency of PLL is 48 MHz.
When the main clock oscillator wait control register (MOSCWTCR) is set to 00h.
When the frequencies of ICLK, FCLK, PCLKA, PCLKB, and PCLKD are set to 12 MHz.

Note 6. When the frequency of the high-speed on-chip oscillator is 32 MHz. When the high-speed on-chip oscillator wait control register (HOCOWTCR) is set to 05h. When the frequencies of ICLK, FCLK, PCLKA, PCLKB, and PCLKD are set to 8 MHz.

Note 7. When the frequency of the high-speed on-chip oscillator is 64 MHz. Set the high-speed on-chip oscillator wait control register (HOCOWTCR) is set to 06h. When the frequencies of ICLK, FCLK, PCLKA, PCLKB, and PCLKD are set to 8 MHz.

Note 8. When the frequency of the high-speed on-chip oscillator is 32 MHz, and the frequency of PLL is 80 MHz. When the high-speed on-chip oscillator wait control register (HOCOWTCR) is set to 05h. When the frequencies of ICLK, FCLK, PCLKA, PCLKB, and PCLKD are set to 10 MHz.

Note 9. When the frequencies of ICLK, FCLK, PCLKA, PCLKB, and PCLKD are not divided.

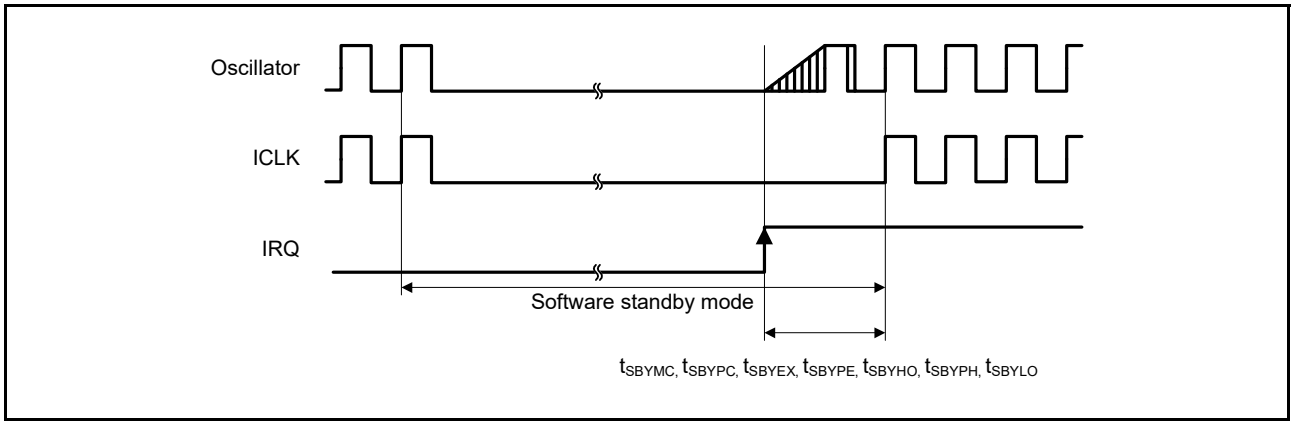

Figure 5.30 Software Standby Mode Recovery Timing

Table 5.20 Timing of Recovery from Low Power Consumption Modes (3)

Conditions: VCC = 2.7 V to 5.5 V, AVCC0 = AVCC1 = AVCC2 = VREFH0 = VREFH1 = VREFH2 = VCC to 5.5 V, VSS = AVSS0 = AVSS1 = AVSS2 = VREFL0 = VREFL1 = VREFL2 = 0 V, T_a = –40 to +85°C

Item		Symbol	Min.	Typ.	Max.	Unit	Test Conditions
Recovery time from deep sleep mode*1	High-speed mode*2	t_{DSLP}	—	2	3.5	μs	Figure 5.31
	Middle-speed mode*3	t_{DSLP}	—	3	4	μs	

Note 1. Oscillators continue oscillating in deep sleep mode.
Note 2. When the frequencies of ICLK, FCLK, PCLKA, PCLKB, and PCLKD are 32 MHz.
Note 3. When the frequencies of ICLK, FCLK, PCLKA, PCLKB, and PCLKD are 12 MHz.

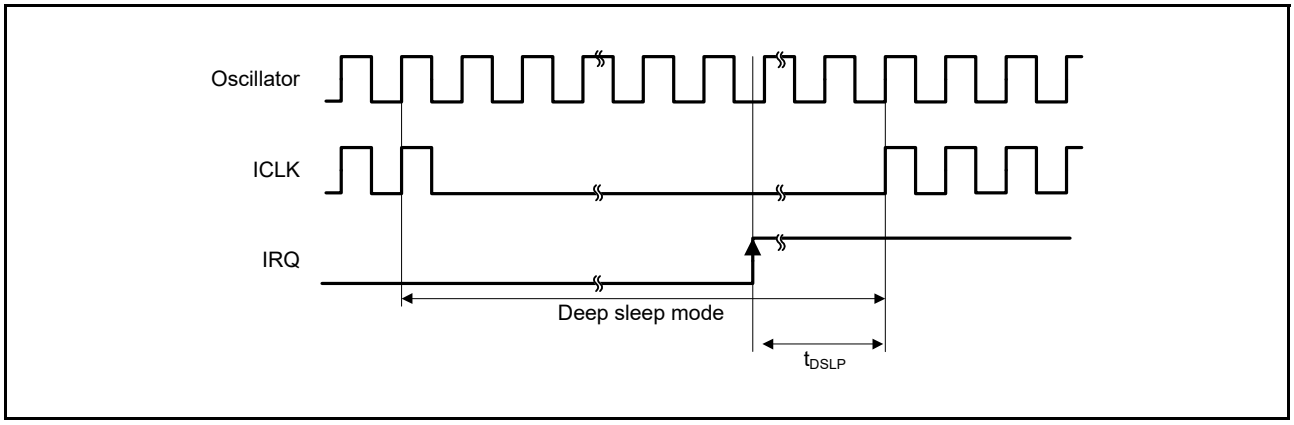

Figure 5.31 Deep Sleep Mode Recovery Timing

Table 5.21 Operating Mode Transition Time

Conditions: VCC = 2.7 V to 5.5 V, AVCC0 = AVCC1 = AVCC2 = VREFH0 = VREFH1 = VREFH2 = VCC to 5.5 V, VSS = AVSS0 = AVSS1 = AVSS2 = VREFL0 = VREFL1 = VREFL2 = 0 V, T_a = –40 to +85°C

Mode before Transition	Mode after Transition	ICLK Frequency	Transition Time			Unit
			Min.	Typ.	Max.	
High-speed operating mode	Middle-speed operating modes	8 MHz	—	10	—	μs
Middle-speed operating modes	High-speed operating mode	8 MHz	—	37.5	—	μs

Note: Values when the frequencies of PCLKA, PCLKB, PCLKD, and FCLK are not divided.

5.3.4 Control Signal Timing

Table 5.22 Control Signal Timing

Conditions: VCC = 2.7 V to 5.5 V, AVCC0 = AVCC1 = AVCC2 = VREFH0 = VREFH1 = VREFH2 = VCC to 5.5 V, VSS = AVSS0 = AVSS1 = AVSS2 = VREFL0 = VREFL1 = VREFL2 = 0 V, T_a = –40 to +85°C

Item	Symbol	Min.	Typ.	Max.	Unit	Test Conditions	
NMI pulse width	t_{NMIW}	200	—	—	ns	NMI digital filter disabled (NMIFLTE.NFLTEN = 0)	t_{Pcyc} × 2 ≤ 200 ns
		t_{Pcyc} × 2*1	—	—			t_{Pcyc} × 2 > 200 ns
		200	—	—		NMI digital filter enabled (NMIFLTE.NFLTEN = 1)	t_{NMICK} × 3 ≤ 200 ns
		t_{NMICK} × 3.5*2	—	—			t_{NMICK} × 3 > 200 ns
IRQ pulse width	t_{IRQW}	200	—	—	ns	IRQ digital filter disabled (IRQFLTE0.FLTENi = 0)	t_{Pcyc} × 2 ≤ 200 ns
		t_{Pcyc} × 2*1	—	—			t_{Pcyc} × 2 > 200 ns
		200	—	—		IRQ digital filter enabled (IRQFLTE0.FLTENi = 1)	t_{IRQCK} × 3 ≤ 200 ns
		t_{IRQCK} × 3.5*3	—	—			t_{IRQCK} × 3 > 200 ns

Note: 200 ns minimum in software standby mode.
Note 1. t_{Pcyc} indicates the cycle of PCLKB.
Note 2. t_{NMICK} indicates the cycle of the NMI digital filter sampling clock.
Note 3. t_{IRQCK} indicates the cycle of the IRQi digital filter sampling clock (i = 0 to 7).

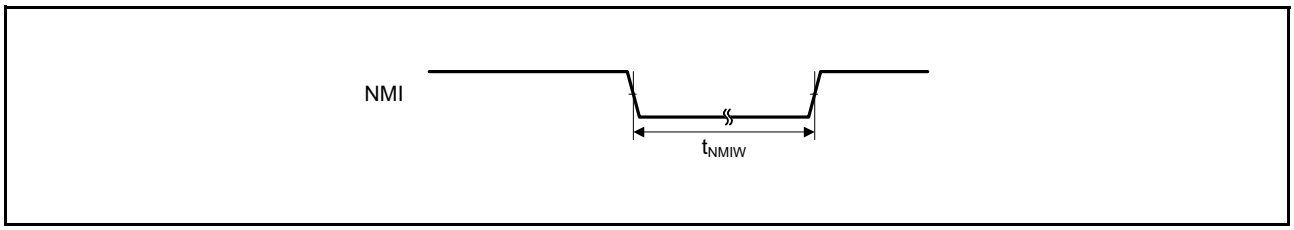

Figure 5.32 NMI Interrupt Input Timing

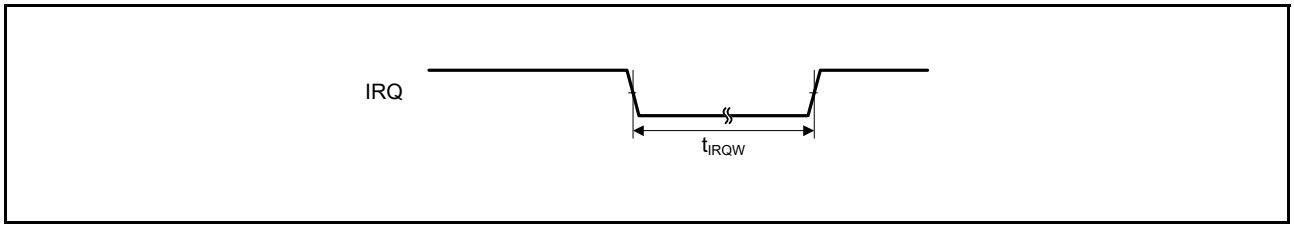

Figure 5.33 IRQ Interrupt Input Timing

5.3.5 Timing of On-Chip Peripheral Modules

Table 5.23 Timing of On-Chip Peripheral Modules (1)

Conditions: VCC = 2.7 V to 5.5 V, AVCC0 = AVCC1 = AVCC2 = VREFH0 = VREFH1 = VREFH2 = VCC to 5.5 V, VSS = AVSS0 = AVSS1 = AVSS2 = VREFL0 = VREFL1 = VREFL2 = 0 V, T_a = –40 to +85°C

Item				Symbol	Min.	Max.	Unit *1	Test Conditions
I/O ports	Input data pulse width			t_{PRW}	1.5	—	t_{Pcyc}	Figure 5.34
MTU3	Input capture input pulse width		Single-edge setting	t_{TICW}	1.5	—	t_{PAcyc}	Figure 5.35
			Both-edge setting		2.5	—		
	Timer clock pulse width		Single-edge setting	t_{TCKWH}, t_{TCKWL}	1.5	—	t_{PAcyc}	Figure 5.36
			Both-edge setting		2.5	—		
			Phase counting mode		2.5	—		
POE3	POE# input pulse width			t_{POEW}	1.5	—	t_{Pcyc}	Figure 5.37
GPT	Input capture input pulse width		Single-edge setting	t_{GTICW}	1.5	—	t_{PAcyc}	Figure 5.38
			Both-edge setting		2.5	—		
	External trigger input pulse width		Single-edge setting	t_{GTETW}	1.5	—	t_{PAcyc}	Figure 5.39
			Both-edge setting		2.5	—		
	Timer clock pulse width			t_{GTCKWH}	1.5	—	t_{PAcyc}	Figure 5.40
				t_{GTCKWL}				
TMR	Timer clock pulse width		Single-edge setting	t_{TMCWH}, t_{TMCWL}	1.5	—	t_{Pcyc}	Figure 5.41
			Both-edge setting		2.5	—		
SCI1, SCI5, SCI6, SCI8, SCI9	Input clock cycle		Asynchronous	t_{Scyc}	4	—	t_{Pcyc}	Figure 5.42
			Clock synchronous		6	—		
	Input clock pulse width			t_{SCKW}	0.4	0.6	t_{Scyc}	
	Input clock rise time			t_{SCKr}	—	20	ns	
	Input clock fall time			t_{SCKf}	—	20	ns	
	Output clock cycle		Asynchronous	t_{Scyc}	16	—	t_{Pcyc}	Figure 5.43
			Clock synchronous		4	—		
	Output clock pulse width			t_{SCKW}	0.4	0.6	t_{Scyc}	
	Output clock rise time			t_{SCKr}	—	20	ns	
	Output clock fall time			t_{SCKf}	—	20	ns	
	Transmit data delay time (master)	Clock synchronous		t_{TXD}	—	40	ns	
	Transmit data delay time (slave)	Clock synchronous	VCC = 4.0 V or above		—	40	ns	
			VCC = 2.7 V or above		—	65	ns	
	Receive data setup time (master)	Clock synchronous	VCC = 4.0 V or above	t_{RXS}	40	—	ns	
			VCC = 2.7 V or above		65	—	ns	
	Receive data setup time (slave)	Clock synchronous			40	—	ns	
	Receive data hold time	Clock synchronous		t_{RXH}	40	—	ns	
A/D converter	Trigger input pulse width			t_{TRGW}	1.5	—	t_{Pcyc}	Figure 5.44
CAC	CACREF input pulse width		$t_{Pcyc} \leq t_{cac}$ *2	t_{CACREF}	4.5 t_{cac} + 3 t_{Pcyc}	—	ns	
			$t_{Pcyc} > t_{cac}$ *2		5 t_{cac} + 6.5 t_{Pcyc}			

Note 1. t_{Pcyc}: PCLK cycle, t_{PAcyc}: PCLKA cycle
Note 2. t_{cac}: CAC count clock source cycle

Table 5.24 Timing of On-Chip Peripheral Modules (2)

Conditions: VCC = 2.7 V to 5.5 V, AVCC0 = AVCC1 = AVCC2 = VREFH0 = VREFH1 = VREFH2 = VCC to 5.5 V, VSS = AVSS0 = AVSS1 = AVSS2 = VREFL0 = VREFL1 = VREFL2 = 0 V, T_a = –40 to +85°C

Item				Symbol	Min.	Max.	Unit *1	Test Conditions
SCI11	Input clock cycle		Asynchronous	t_{Scyc}	4	—	t_{PAcyc}	Figure 5.42
			Clock synchronous		6	—		
	Input clock frequency		Asynchronous	t_{Scyc}	—	10	MHz	
			Clock synchronous		—	6.67		
	Input clock pulse width			t_{SCKW}	0.4	0.6	t_{Scyc}	
	Input clock rise time			t_{SCKr}	—	20	ns	
	Input clock fall time			t_{SCKf}	—	20	ns	
	Output clock cycle		Asynchronous	t_{Scyc}	16	—	t_{PAcyc}	Figure 5.43
			Clock synchronous		4	—		
	Output clock frequency		Asynchronous	t_{Scyc}	—	5	MHz	
			Clock synchronous		—	10		
	Output clock pulse width			t_{SCKW}	0.4	0.6	t_{Scyc}	
	Output clock rise time			t_{SCKr}	—	20	ns	
	Output clock fall time			t_{SCKf}	—	20	ns	
	Transmit data delay time (master)	Clock synchronous		t_{TXD}	—	40	ns	
	Transmit data delay time (slave)	Clock synchronous	VCC = 4.0 V or above		—	40	ns	
			VCC = 2.7 V or above		—	65	ns	
	Receive data setup time (master)	Clock synchronous	VCC = 4.0 V or above	t_{RXS}	40	—	ns	
			VCC = 2.7 V or above		65	—	ns	
	Receive data setup time (slave)	Clock synchronous			40	—	ns	
	Receive data hold time	Clock synchronous		t_{RXH}	40	—	ns	

Note 1. t_{Pcyc}: PCLK cycle, t_{PAcyc}: PCLKA cycle

Table 5.25 Timing of On-Chip Peripheral Modules (3)

Conditions: VCC = 2.7 V to 5.5 V, AVCC0 =AVCC1 = AVCC2 = VREFH0 = VREFH1 = VREFH2 = VCC to 5.5 V, VSS = AVSS0 = AVSS1 = AVSS2 = VREFL0 = VREFL1 = VREFL2 = 0 V, T_a = –40 to +85°C, C = 30 pF

Item				Symbol	Min.	Max.	Unit*1	Test Conditions
RSPI	RSPCK clock cycle	Master		t_{SPcyc}	2	4096	t_{Pcyc}	Figure 5.45
		Slave			6	—		
	RSPCK clock high pulse width	Master	VCC = 4.0 V or above	t_{SPCKWH}	$(t_{SPcyc} – t_{SPCKr} – t_{SPCKf})/2 – 5$	—	ns	
			VCC = 2.7 V or above		$(t_{SPcyc} – t_{SPCKr} – t_{SPCKf})/2 – 8$	—		
		Slave			$(t_{SPcyc} – t_{SPCKr} – t_{SPCKf})/2$	—		
	RSPCK clock low pulse width	Master	VCC = 4.0 V or above	t_{SPCKWL}	$(t_{SPcyc} – t_{SPCKr} – t_{SPCKf})/2 – 5$	—	ns	
			VCC = 2.7 V or above		$(t_{SPcyc} – t_{SPCKr} – t_{SPCKf})/2 – 8$	—		
		Slave			$(t_{SPcyc} – t_{SPCKr} – t_{SPCKf})/2$	—		
	RSPCK clock rise/fall time	Output	VCC = 4.0 V or above	t_{SPCKr}, t_{SPCKf}	—	6	ns	
			VCC = 2.7 V or above		—	10		
		Input			—	0.1	μs/V	
	Data input setup time	Master	VCC = 4.0 V or above	t_{SU}	10	—	ns	Figure 5.46 to Figure 5.49
			VCC = 2.7 V or above		26	—		
		Slave			20	—		
	Data input hold time	Master	RSPCK set to a division ratio other than PCLKB divided by 2	t_H	t_{Pcyc}	—	ns	
			RSPCK set to PCLKB divided by 2	t_{HF}	0	—		
		Slave		t_H	0	—		
	SSL setup time	Master		t_{LEAD}	$–30 + N^{*2} \times t_{SPcyc}$	—	ns	
		Slave			6	—	t_{Pcyc}	
	SSL hold time	Master		t_{LAG}	$–30 + N^{*3} \times t_{SPcyc}$	—	ns	
		Slave			6	—	t_{Pcyc}	
	Data output delay time	Master	VCC = 4.0 V or above	t_{OD}	—	10	ns	
			VCC = 2.7 V or above		—	14		
		Slave			—	65		
	Data output hold time	Master		t_{OH}	0	—	ns	
		Slave			0	—		
	Successive transmission delay time	Master		t_{TD}	$t_{SPcyc} + 2 \times t_{Pcyc}$	$8 \times t_{SPcyc} + 2 \times t_{Pcyc}$	ns	
		Slave			$6 \times t_{Pcyc}$	—		
	MOSI and MISO rise/fall time	Output		t_{Dr}, t_{Df}	—	10	ns	
		Input			—	1	μs	
	SSL rise/fall time	Output		t_{SSLr}, t_{SSLf}	—	10	ns	
		Input			—	1	μs	
	Slave access time			t_{SA}	—	6	t_{Pcyc}	Figure 5.48, Figure 5.49
	Slave output release time			t_{REL}	—	5	t_{Pcyc}	

Note 1. t_{Pcyc}: PCLK cycle
Note 2. N: An integer from 1 to 8 that can be set by the RSPI clock delay register (SPCKD)
Note 3. N: An integer from 1 to 8 that can be set by the RSPI slave select negation delay register (SSLND)

Table 5.26 Timing of On-Chip Peripheral Modules (4)

Conditions: VCC = 2.7 V to 5.5 V, AVCC0 = AVCC1 = AVCC2 = VREFH0 = VREFH1 = VREFH2 = VCC to 5.5 V, VSS = AVSS0 = AVSS1 = AVSS2 = VREFL0 = VREFL1 = VREFL2 = 0 V, T_a = –40 to +85°C, C = 30 pF

Item			Symbol	Min.	Max.	Unit*1	Test Conditions
Simple SPI (SCI1, SCI5, SCI6, SCI8, SCI9)	SCK clock cycle output (master)		t_{SPcyc}	4	65536	t_{Pcyc}	Figure 5.45
	SCK clock cycle input (slave)			6	—	t_{Pcyc}	
	SCK clock high pulse width		t_{SPCKWH}	0.4	0.6	t_{SPcyc}	
	SCK clock low pulse width		t_{SPCKWL}	0.4	0.6	t_{SPcyc}	
	SCK clock rise/fall time		t_{SPCKr}, t_{SPCKf}	—	20	ns	
	Data input setup time (master)	VCC = 4.0 V or above	t_{SU}	40	—	ns	Figure 5.46, Figure 5.47
		VCC = 2.7 V or above		65	—		
	Data input setup time (slave)			40	—		
	Data input hold time		t_H	40	—	ns	
	SS input setup time		t_{LEAD}	3	—	t_{SPcyc}	
	SS input hold time		t_{LAG}	3	—	t_{SPcyc}	
	Data output delay time (master)		t_{OD}	—	40	ns	
	Data output delay time (slave)	VCC = 4.0 V or above		—	40		
		VCC = 2.7 V or above		—	65		
	Data output hold time	Master	t_{OH}	–10	—	ns	
		Slave		–10	—		
	Data rise/fall time		t_{Dr}, t_{Df}	—	20	ns	
	SS input rise/fall time		t_{SSLr}, t_{SSLf}	—	20	ns	
	Slave access time		t_{SA}	—	6	t_{Pcyc}	Figure 5.48, Figure 5.49
	Slave output release time		t_{REL}	—	6	t_{Pcyc}	

Note 1. t_{Pcyc}: PCLK cycle

Table 5.27 Timing of On-Chip Peripheral Modules (5)

Conditions: VCC = 2.7 V to 5.5 V, AVCC0 = AVCC1 = AVCC2 = VREFH0 = VREFH1 = VREFH2 = VCC to 5.5 V, VSS = AVSS0 = AVSS1 = AVSS2 = VREFL0 = VREFL1 = VREFL2 = 0 V, T_a = –40 to +85°C, C = 30 pF

Item			Symbol	Min.	Max.	Unit*1	Test Conditions
Simple SPI (SCI11)	SCK clock cycle output (master)		t_{SPcyc}	4	65536	t_{Pcyc}	Figure 5.45
	SCK clock cycle input (slave)			6	—	t_{Pcyc}	
	SCK clock output frequency (master)		f_{SPcyc}	—	10	MHz	
	SCK clock input frequency (slave)			—	6.67	MHz	
	SCK clock high pulse width		t_{SPCKWH}	0.4	0.6	t_{SPcyc}	
	SCK clock low pulse width		t_{SPCKWL}	0.4	0.6	t_{SPcyc}	
	SCK clock rise/fall time		t_{SPCKr}, t_{SPCKf}	—	20	ns	
	Data input setup time (master)	VCC = 4.0 V or above	t_{SU}	40	—	ns	Figure 5.46, Figure 5.47
		VCC = 2.7 V or above		65	—		
	Data input setup time (slave)			40	—		
	Data input hold time		t_H	40	—	ns	
	SS input setup time		t_{LEAD}	3	—	t_{SPcyc}	
	SS input hold time		t_{LAG}	3	—	t_{SPcyc}	
	Data output delay time (master)		t_{OD}	—	40	ns	
	Data output delay time (slave)	VCC = 4.0 V or above		—	40		
		VCC = 2.7 V or above		—	65		
	Data output hold time	Master	t_{OH}	–10	—	ns	
		Slave		–10	—		
	Data rise/fall time		t_{Dr}, t_{Df}	—	20	ns	
	SS input rise/fall time		t_{SSLr}, t_{SSLf}	—	20	ns	
	Slave access time	PCLKA ≤ 40MHz	t_{SA}	—	6	t_{PAcyc}	Figure 5.48, Figure 5.49
		PCLKA > 40MHz		—	12	t_{PAcyc}	
	Slave output release time	PCLKA ≤ 40MHz	t_{REL}	—	6	t_{PAcyc}	
		PCLKA > 40MHz		—	12	t_{PAcyc}	

Note 1. t_{Pcyc}: PCLK cycle, t_{PAcyc}: PCLKA cycle

Table 5.28 Timing of On-Chip Peripheral Modules (6)

Conditions: VCC = 2.7 V to 5.5 V, AVCC0 = AVCC1 = AVCC2 = VREFH0 = VREFH1 = VREFH2 = VCC to 5.5 V, VSS = AVSS0 = AVSS1 = AVSS2 = VREFL0 = VREFL1 = VREFL2 = 0 V, T_a = –40 to +85°C

Item		Symbol	Min.*1, *2	Max.	Unit	Test Conditions
RIIC (Standard mode, SMBus)	SCL cycle time	t_{SCL}	6 (12) × t_{IICcyc} + 1300	—	ns	Figure 5.50
	SCL high pulse width	t_{SCLH}	3 (6) × t_{IICcyc} + 300	—	ns	
	SCL low pulse width	t_{SCLL}	3 (6) × t_{IICcyc} + 300	—	ns	
	SCL, SDA rise time	t_{Sr}	—	1000	ns	
	SCL, SDA fall time	t_{Sf}	—	300	ns	
	SCL, SDA spike pulse removal time	t_{SP}	0	1 (4) × t_{IICcyc}	ns	
	SDA bus free time	t_{BUF}	3 (6) × t_{IICcyc} + 300	—	ns	
	START condition hold time	t_{STAH}	t_{IICcyc} + 300	—	ns	
	Repeated START condition setup time	t_{STAS}	1000	—	ns	
	STOP condition setup time	t_{STOS}	1000	—	ns	
	Data setup time	t_{SDAS}	t_{IICcyc} + 50	—	ns	
	Data hold time	t_{SDAH}	0	—	ns	
	SCL, SDA capacitive load	C_b	—	400	pF	
RIIC (Fast mode)	SCL cycle time	t_{SCL}	6 (12) × t_{IICcyc} + 600	—	ns	Figure 5.50
	SCL high pulse width	t_{SCLH}	3 (6) × t_{IICcyc} + 300	—	ns	
	SCL low pulse width	t_{SCLL}	3 (6) × t_{IICcyc} + 300	—	ns	
	SCL, SDA rise time	t_{Sr}	—	300	ns	
	SCL, SDA fall time	t_{Sf}	—	300	ns	
	SCL, SDA spike pulse removal time	t_{SP}	0	1 (4) × t_{IICcyc}	ns	
	SDA bus free time	t_{BUF}	3 (6) × t_{IICcyc} + 300	—	ns	
	START condition hold time	t_{STAH}	t_{IICcyc} + 300	—	ns	
	Repeated START condition setup time	t_{STAS}	300	—	ns	
	STOP condition setup time	t_{STOS}	300	—	ns	
	Data setup time	t_{SDAS}	t_{IICcyc} + 50	—	ns	
	Data hold time	t_{SDAH}	0	—	ns	
	SCL, SDA capacitive load	C_b	—	400	pF	

Note 1. t_{IICcyc}: RIIC internal reference count clock (IICφ) cycle

Note 2. The value in parentheses is used when the ICMR3.NF[1:0] bits are set to 11b while a digital filter is enabled with the ICFER.NFE bit is 1.

Table 5.29 Timing of On-Chip Peripheral Modules (7)

Conditions: VCC = 2.7 V to 5.5 V, AVCC0 = AVCC1 = AVCC2 = VREFH0 = VREFH1 = VREFH2 = 2.7 V to 5.5 V, VSS = AVSS0 = AVSS1 = AVSS2 = VREFL0 = VREFL1 = VREFL2 = 0 V, T_a = –40 to +85°C

Item		Symbol	Min.	Max.	Unit	Test Conditions
Simple I²C (Standard mode) (SCI1, SCI5, SCI6, SCI8, SCI9, SCI11)	SDA rise time	t_{Sr}	—	1000	ns	Figure 5.50
	SDA fall time	t_{Sf}	—	300	ns	
	SDA spike pulse removal time	t_{SP}	0	4 × t_{Pcyc}*1	ns	
	Data setup time	t_{SDAS}	250	—	ns	
	Data hold time	t_{SDAH}	0	—	ns	
	SCL, SDA capacitive load	C_b*2	—	400	pF	
Simple I²C (Fast mode) (SCI, SCI5, SCI6, SCI8, SCI9, SCI11)	SDA rise time	t_{Sr}	—	300	ns	Figure 5.50
	SDA fall time	t_{Sf}	—	300	ns	
	SDA spike pulse removal time	t_{SP}	0	4 × t_{Pcyc}*1	ns	
	Data setup time	t_{SDAS}	100	—	ns	
	Data hold time	t_{SDAH}	0	—	ns	
	SCL, SDA capacitive load	C_b*2	—	400	pF	

Note 1. t_{Pcyc}: PCLKB cycle
Note 2. C_b is the total capacitance of the bus lines.

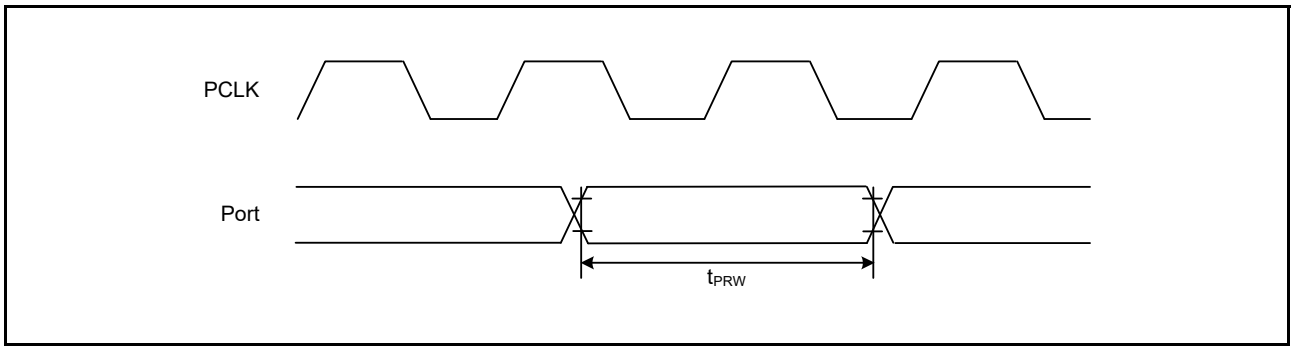

Figure 5.34 I/O Port Input Timing

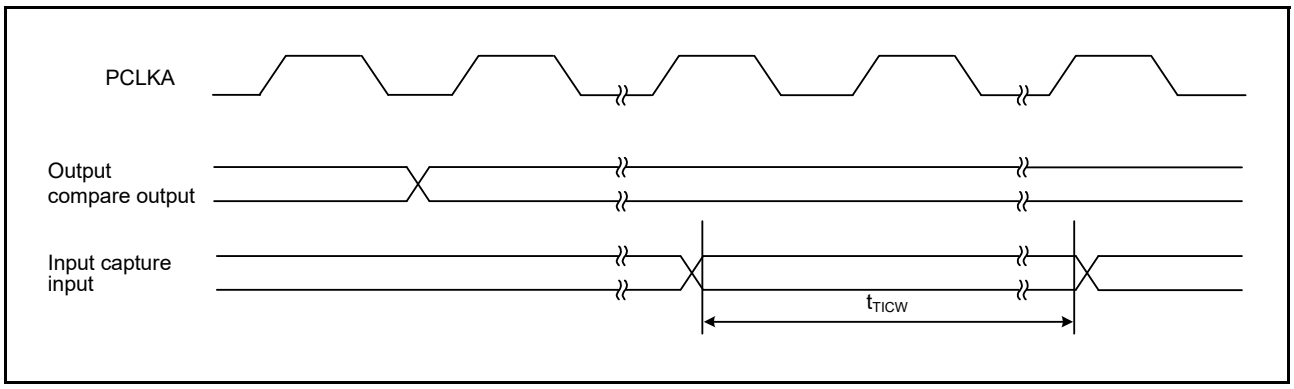

Figure 5.35 MTU3 Input/Output Timing

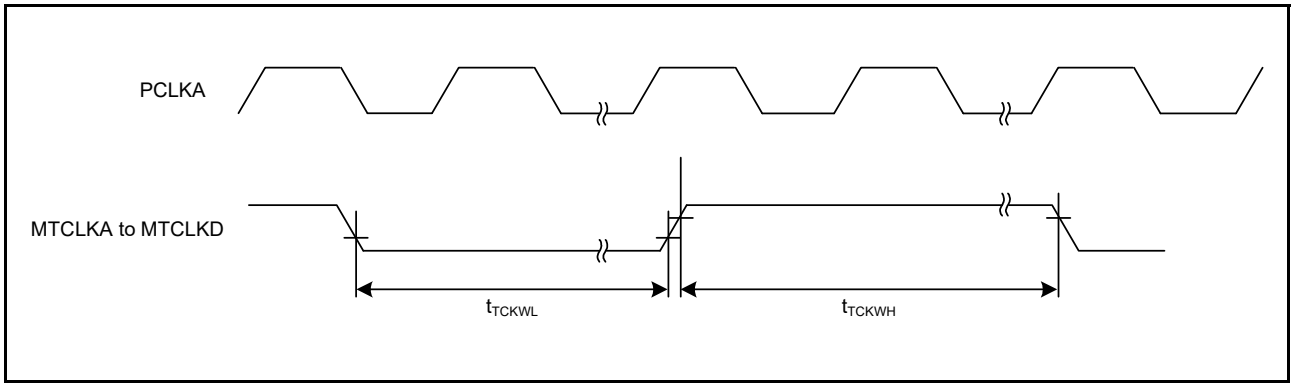

Figure 5.36 MTU3 Clock Input Timing

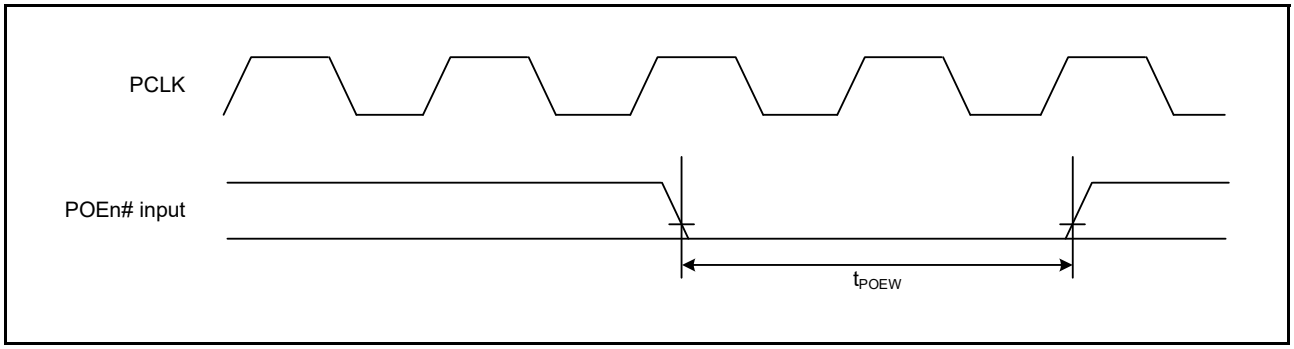

Figure 5.37 POE# Input Timing

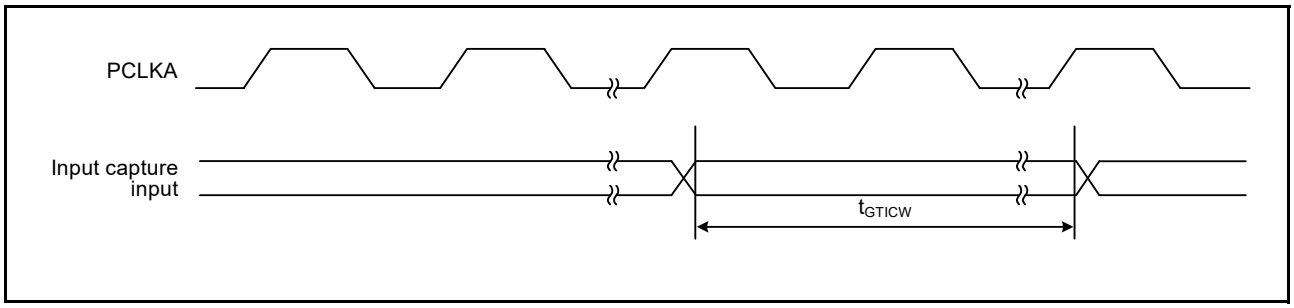

Figure 5.38 Input Timing of GPT Input Capture

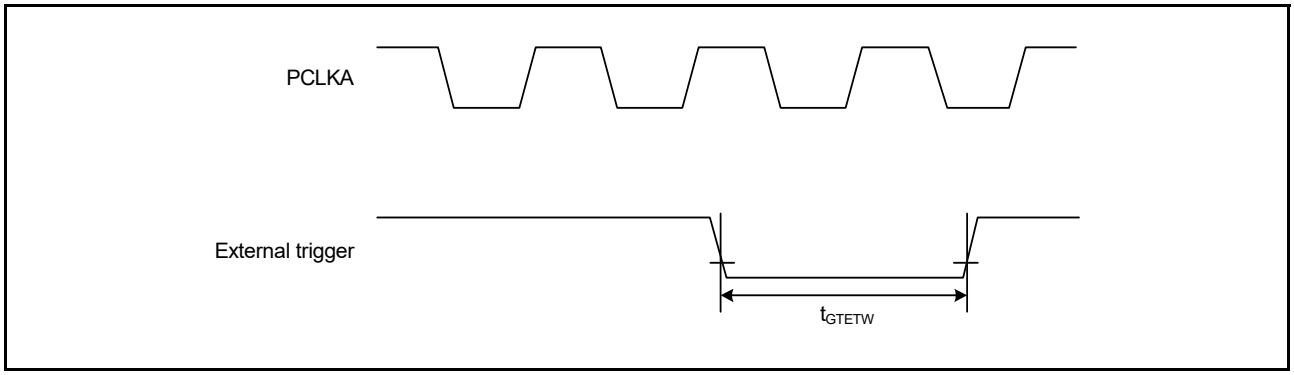

Figure 5.39 Timing of the GPT External Trigger Input

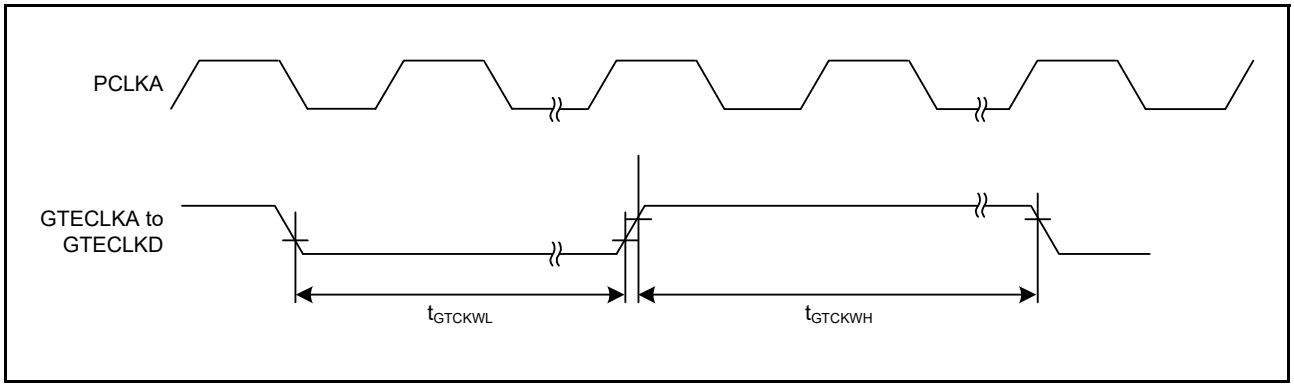

Figure 5.40 GPT Clock Input Timing

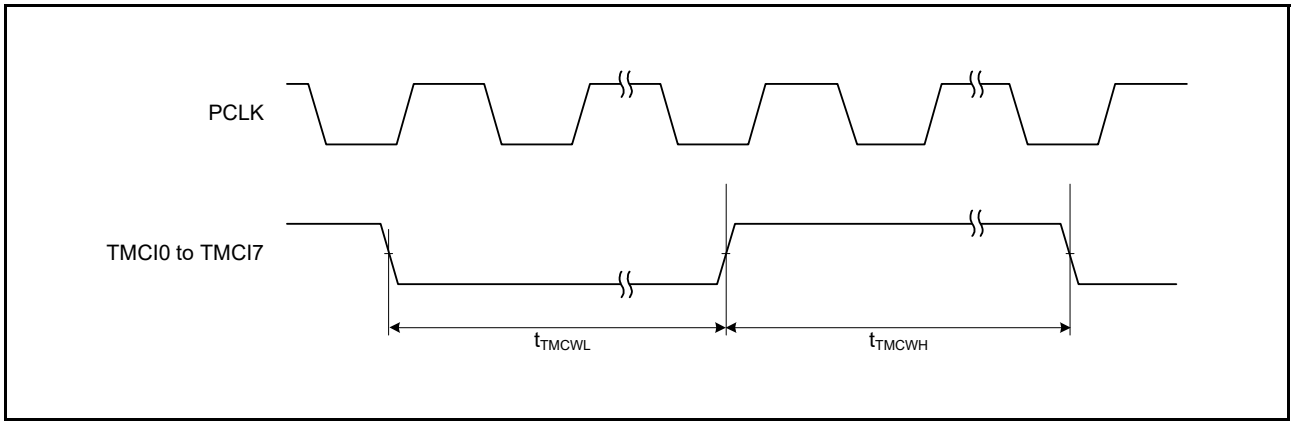

Figure 5.41 TMR Clock Input Timing

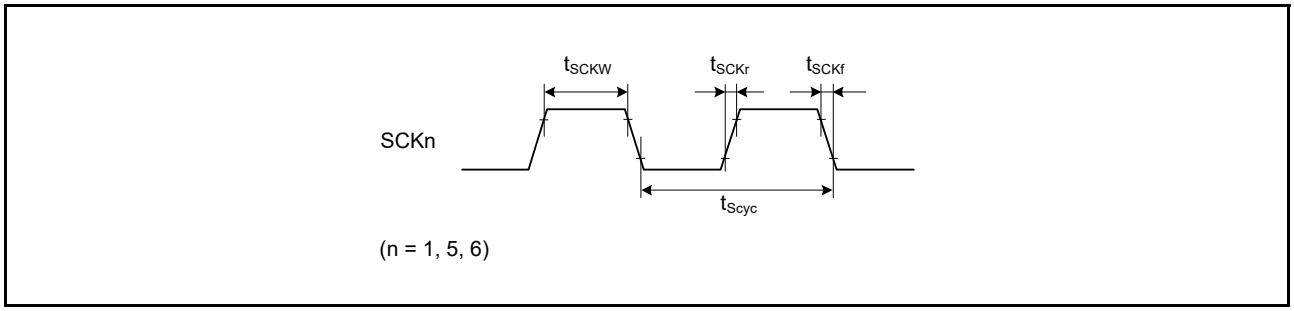

Figure 5.42 SCK Clock Input Timing

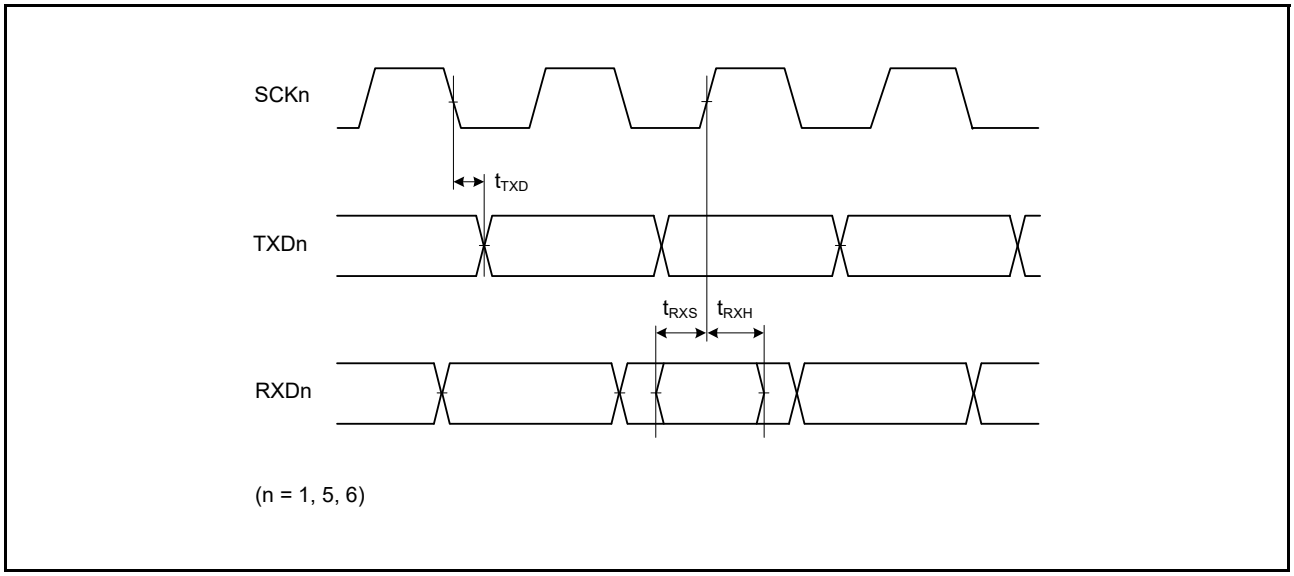

Figure 5.43 SCI Input/Output Timing: Clock Synchronous Mode

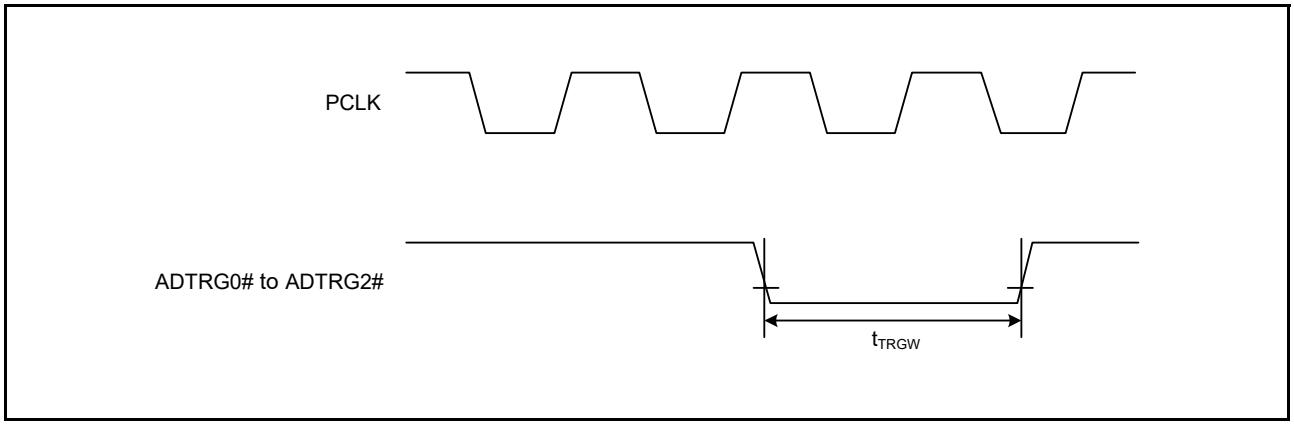

Figure 5.44 A/D Converter External Trigger Input Timing

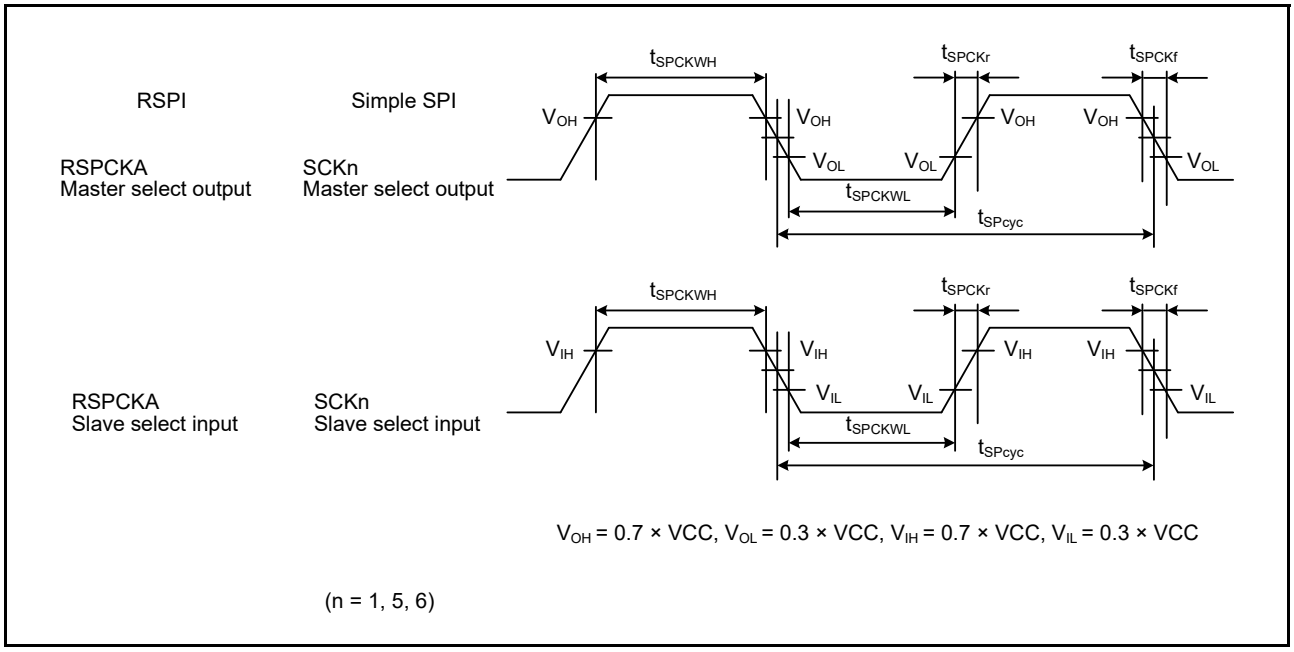

Figure 5.45 RSPI Clock Timing and Simple SPI Clock Timing

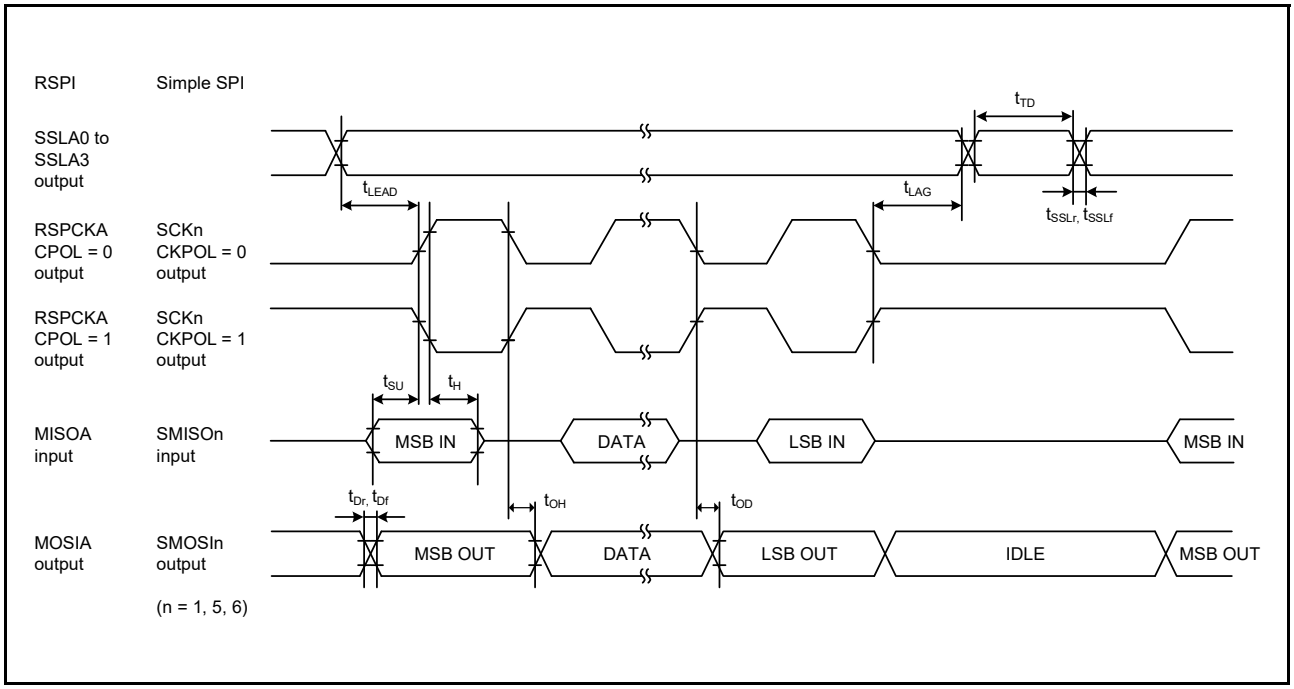

Figure 5.46 RSPI Timing (Master, CPHA = 0) and Simple SPI Clock Timing (Master, CKPH = 1)

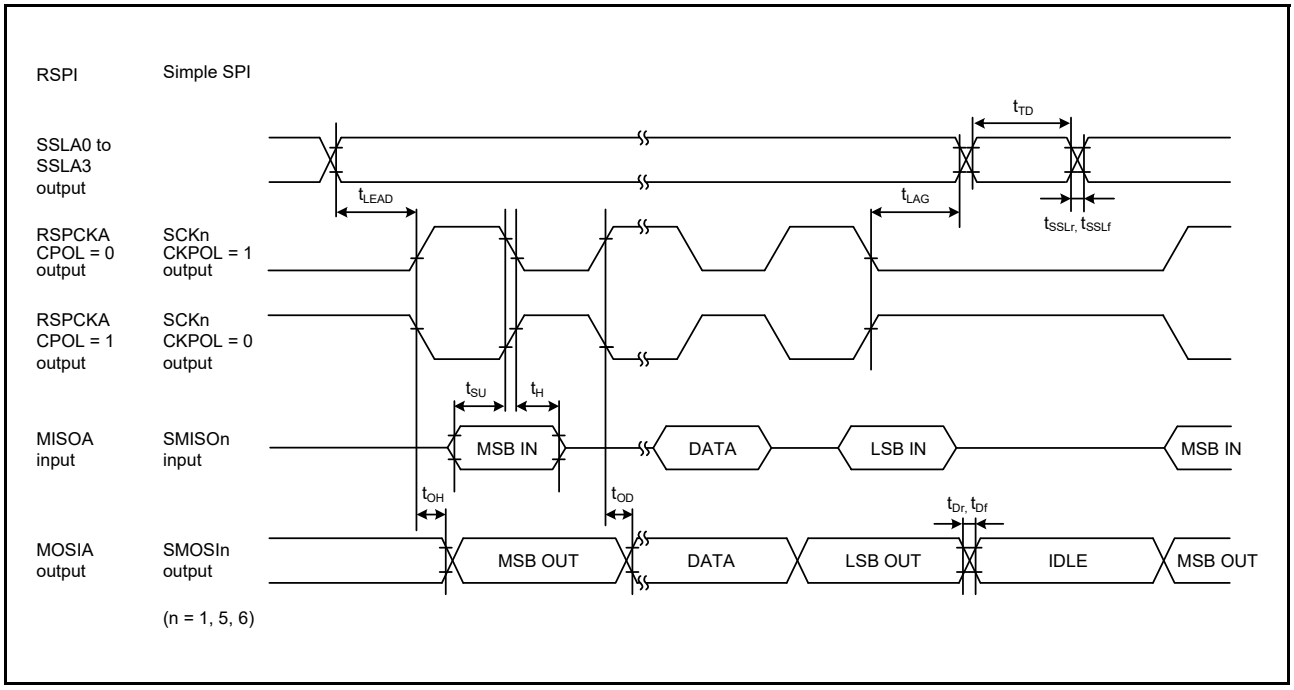

Figure 5.47 RSPI Timing (Master, CPHA = 1) and Simple SPI Clock Timing (Master, CKPH = 0)

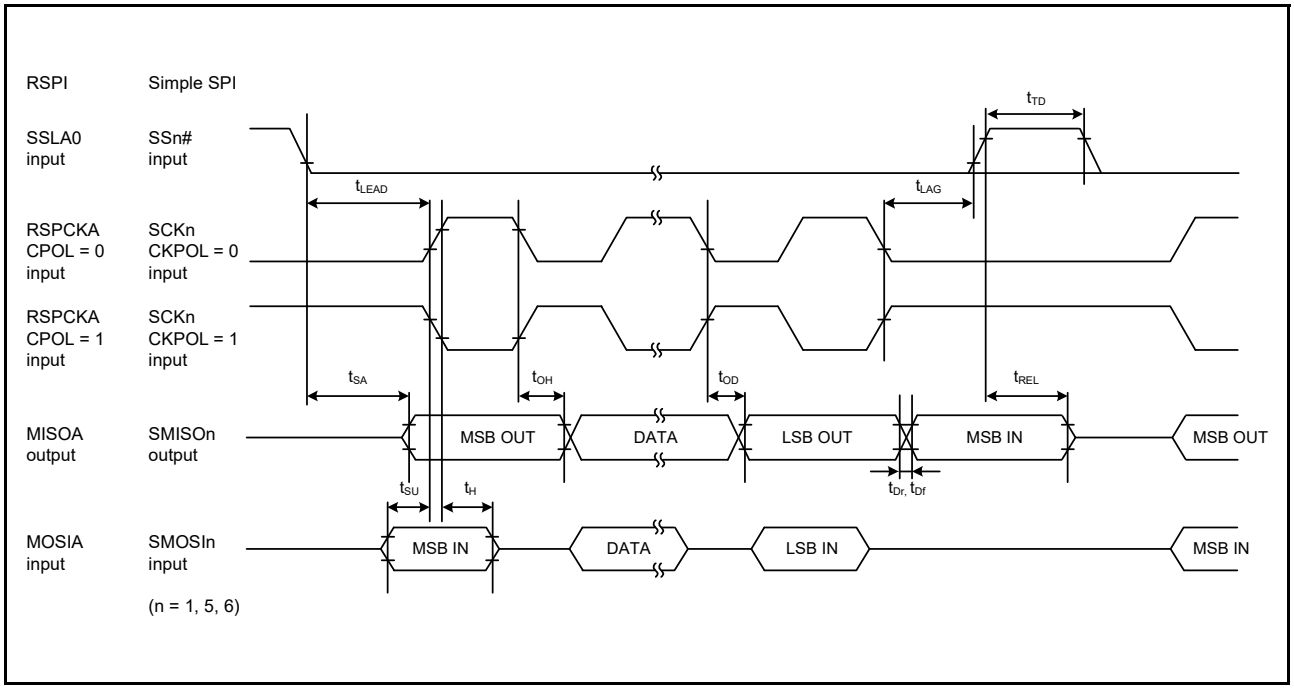

Figure 5.48 RSPI Timing (Slave, CPHA = 0) and Simple SPI Clock Timing (Slave, CKPH = 1)

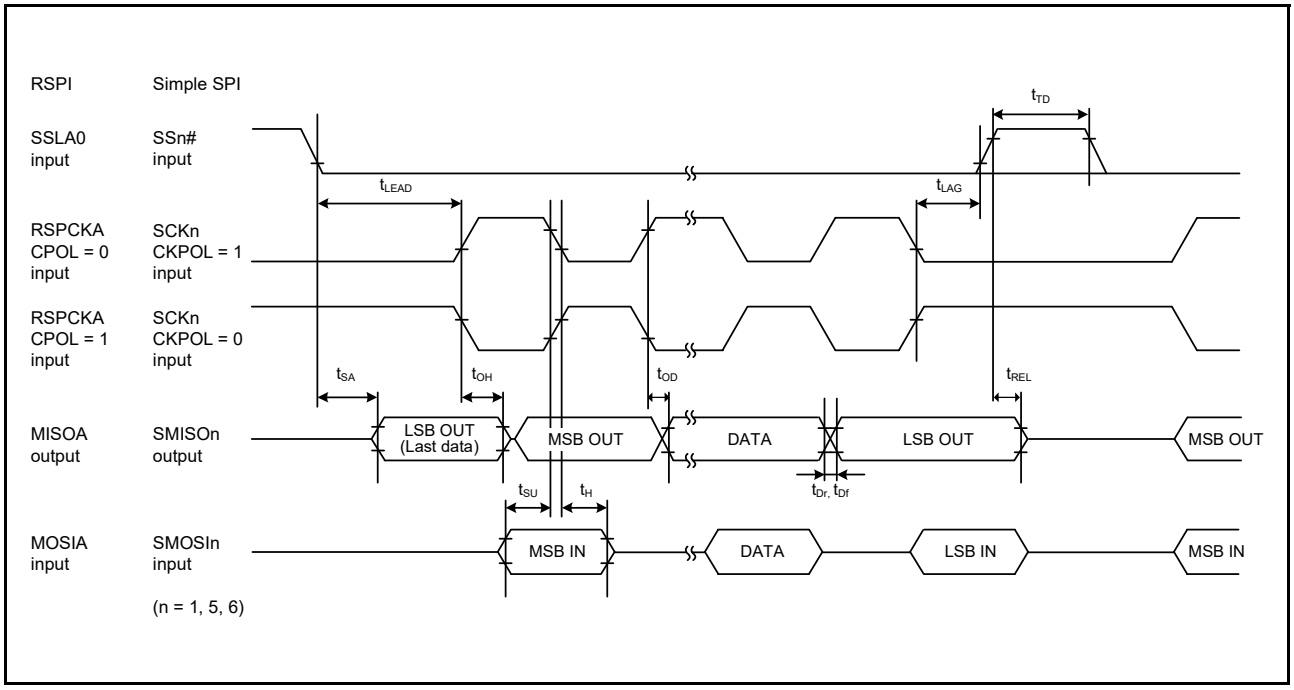

Figure 5.49 RSPI Timing (Slave, CPHA = 1) and Simple SPI Clock Timing (Slave, CKPH = 0)

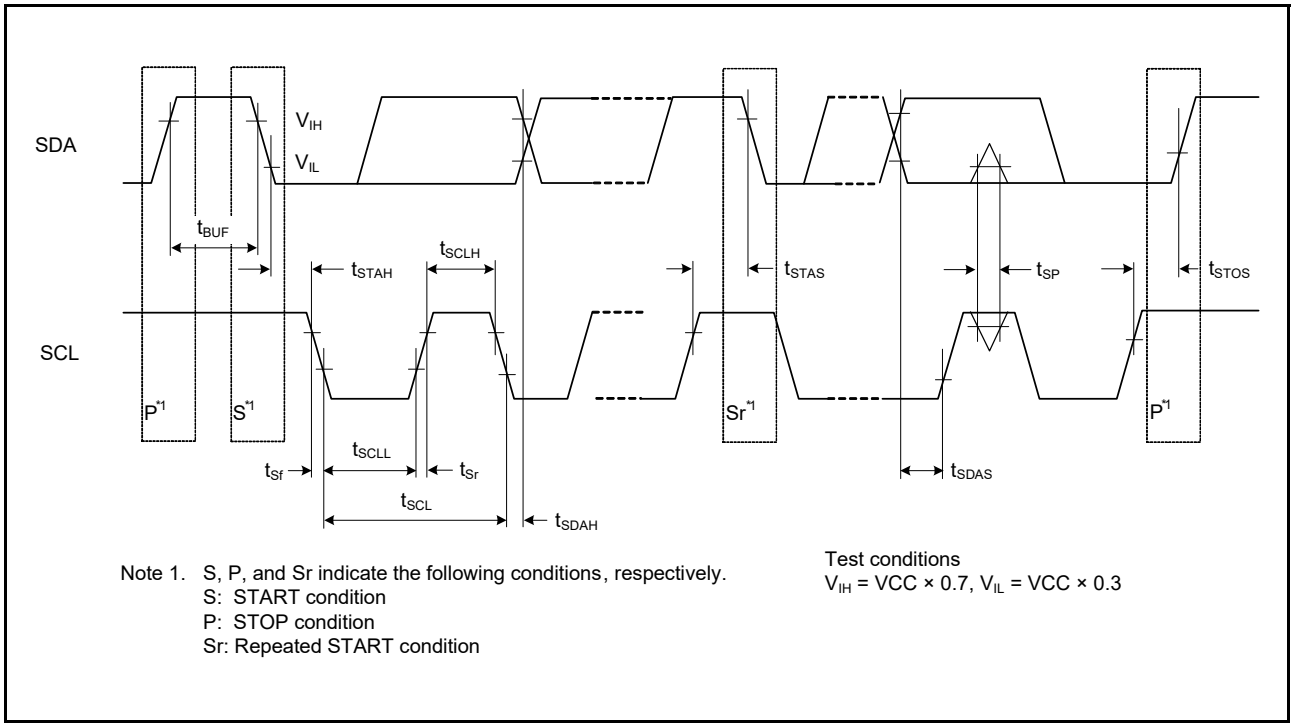

Note 1. S, P, and Sr indicate the following conditions, respectively.
S: START condition
P: STOP condition
Sr: Repeated START condition

Test conditions
V_{IH} = VCC × 0.7, V_{IL} = VCC × 0.3

Figure 5.50 RIIC Bus Interface Input/Output Timing and Simple I²C Bus Interface Input/Output Timing

5.4 A/D Conversion Characteristics

Table 5.30 A/D Conversion Characteristics (1)

Conditions: VCC = 4.5 V to 5.5 V, AVCC0 = AVCC1 = AVCC2 = VREFH0 = VREFH1 = VREFH2 = VCC to 5.5 V, VSS = AVSS0 = AVSS1 = AVSS2 = VREFL0 = VREFL1 = VREFL2 = 0 V, T_a = –40 to +85°C

Item		Min.	Typ.	Max.	Unit	Test Conditions
Frequency		1	—	40	MHz	
Resolution		—	—	12	Bit	
Conversion time*1 (Operation at PCLKD = 40 MHz)	Permissible signal source impedance (Max.) = 1.0 kΩ Sample-and-hold circuit not in use	1.00	—	—	μs	High-precision channel ADSSTRn.SST[7:0] bits = 08h
		1.25	—	—	μs	Normal-precision channel ADSSTRn.SST[7:0] bits = 12h
	Permissible signal source impedance (Max.) = 1.0 kΩ Sample-and-hold circuit in use	1.65	—	—	μs	High-precision channel ADSSTRn.SST[7:0] bits = 08h ADSHCR.SSTSH[7:0] bits = 0Dh AN100 to 102 = 0.25 V to AVCC1 – 0.25 V
Analog input capacitance		—	—	12	pF	
Offset error		—	±2.0	±6.5	LSB	
Full-scale error		—	±2.0	±6.5	LSB	
Quantization error		—	±0.5	—	LSB	
Absolute accuracy	Sample-and-hold circuit in use	—	±2.5	±8.0	LSB	AN100 to 102 = 0.25 V to AVCC1 – 0.25
	Sample-and-hold circuit not in use	—	±3.0	±8.0	LSB	
DNL differential nonlinearity error		—	±0.5	±1.5	LSB	
INL integral nonlinearity error		—	±1.5	±4.0	LSB	

Note: The characteristics apply when no pin functions other than A/D converter input are used. Absolute accuracy includes quantization errors. Offset error, full-scale error, DNL differential nonlinearity error, and INL integral nonlinearity error do not include quantization errors.

Note 1. The conversion time is the sum of the sampling time and the comparison time. As the test conditions, the number of sampling states is indicated.

Table 5.31 A/D Conversion Characteristics (2)

Conditions: VCC = 2.7 V to 5.5 V, AVCC0 = AVCC1 = AVCC2 = VREFH0 = VREFH1 = VREFH2 = VCC to 5.5 V, VSS = AVSS0 = AVSS1 = AVSS2 = VREFL0 = VREFL1 = VREFL2 = 0 V, T_a = –40 to +85°C

Item		Min.	Typ.	Max.	Unit	Test Conditions
Frequency		1	—	40	MHz	
Resolution		—	—	12	Bit	
Conversion time*1 (Operation at PCLKD = 40 MHz)	Permissible signal source impedance (Max.) = 1.0 kΩ Sample-and-hold circuit not in use	1.15	—	—	μs	High-precision channel ADSSTRn.SST[7:0] bits = 0Eh
		1.30	—	—	μs	Normal-precision channel ADSSTRn.SST[7:0] bits = 14h
	Permissible signal source impedance (Max.) = 1.0 kΩ Sample-and-hold circuit in use	1.90	—	—	μs	High-precision channel ADSSTRn.SST[7:0] bits = 0Eh ADSHCR.SSTSH[7:0] bits = 11h AN100 to 102 = 0.25 V to AVCC1 – 0.25 V
Analog input capacitance		—	—	12	pF	
Offset error		—	±2.0	±6.5	LSB	
Full-scale error		—	±2.0	±6.5	LSB	
Quantization error		—	±0.5	—	LSB	
Absolute accuracy		—	±3.0	±8.0	LSB	
DNL differential nonlinearity error		—	±0.5	±1.5	LSB	
INL integral nonlinearity error		—	±1.5	±4.0	LSB	

Note: The characteristics apply when no pin functions other than A/D converter input are used. Absolute accuracy includes quantization errors. Offset error, full-scale error, DNL differential nonlinearity error, and INL integral nonlinearity error do not include quantization errors.

Note 1. The conversion time is the sum of the sampling time and the comparison time. As the test conditions, the number of sampling states is indicated.

Table 5.32 A/D Converter Channel Classification

Classification	Channel	Conditions	Remarks
High-precision channel	AN000 to AN003, AN100 to AN103, AN200 to AN211	AVCC0 = AVCC1 = AVCC2 = 2.7 to 5.5 V	
Normal-precision channel	AN016, AN116	VCC = AVCC0 = AVCC1 =AVCC2 = 2.7 to 5.5 V	
Internal reference voltage input channel	Internal reference voltage	AVCC0 = AVCC1 = AVCC2 = 2.7 to 5.5 V	

Table 5.33 A/D Internal Reference Voltage Characteristics

Conditions: VCC = 2.7 V to 5.5 V, AVCC0 = AVCC1 = AVCC2 = VREFH0 = VREFH1 = VREFH2 = VCC to 5.5 V, VSS = AVSS0 = AVSS1 = AVSS2 = VREFL0 = VREFL1 = VREFL2 = 0 V, T_a = –40 to +85°C

Item	Min.	Typ.	Max.	Unit	Test Conditions
Internal reference voltage input channel*1	1.35	1.43	1.50	V	

Note 1. The A/D internal reference voltage indicates the voltage when the internal reference voltage is input to the A/D converter.

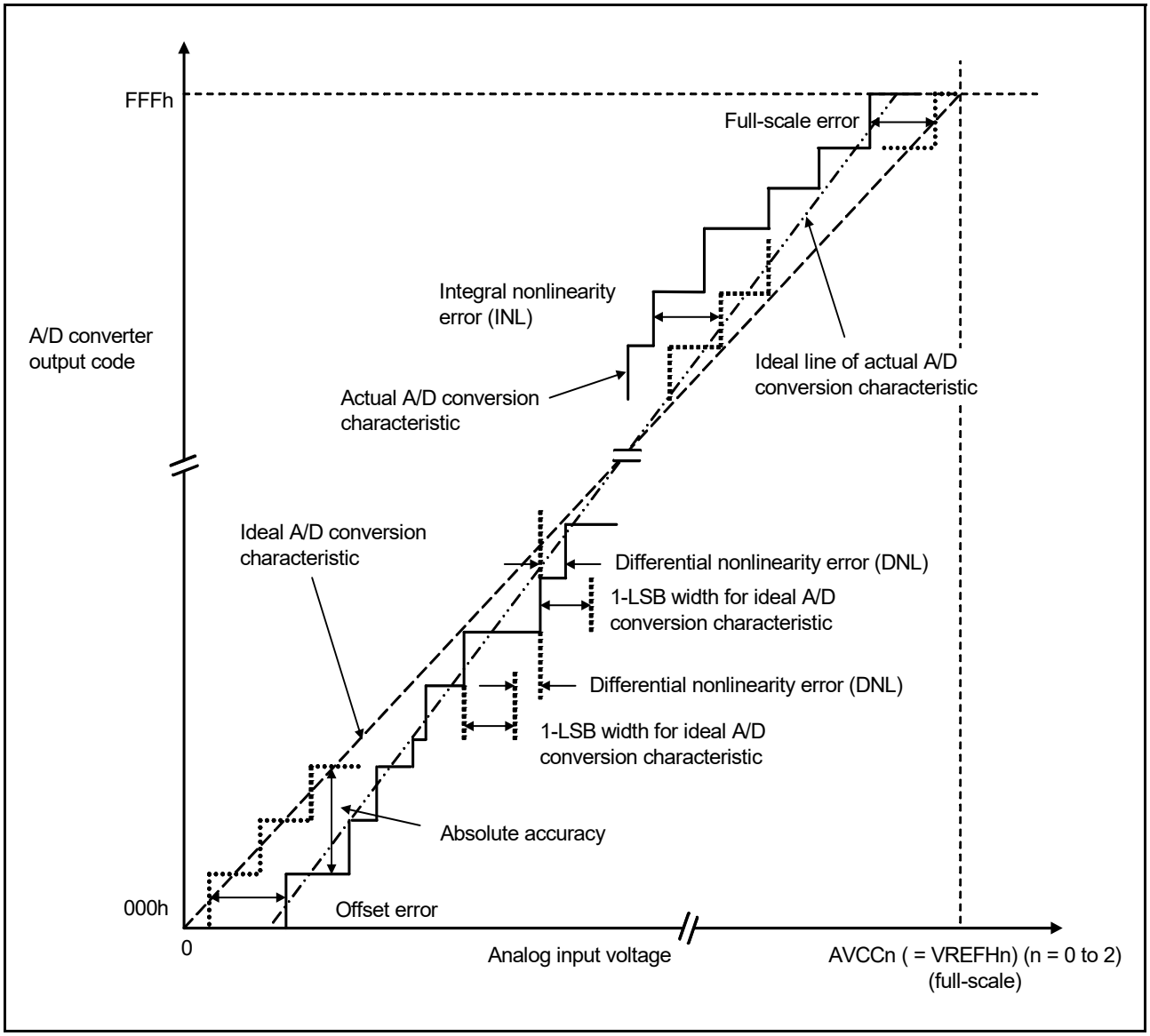

Figure 5.51 Illustration of A/D Converter Characteristic Terms

Absolute accuracy

Absolute accuracy is the difference between output code based on the theoretical A/D conversion characteristics, and the actual A/D conversion result. When measuring absolute accuracy, the voltage at the midpoint of the width of analog input voltage (1-LSB width), that can meet the expectation of outputting an equal code based on the theoretical A/D conversion characteristics, is used as an analog input voltage. For example, if 12-bit resolution is used and if reference voltage (AVCCn (= VREFHn) (n = 0 to 2)) is 3.072 V, then 1-LSB width becomes 0.75 mV, and 0 mV, 0.75 mV, 1.5 mV, ... are used as analog input voltages.

If analog input voltage is 6 mV, absolute accuracy = ±5 LSB means that the actual A/D conversion result is in the range of 003h to 00Dh though an output code, 008h, can be expected from the theoretical A/D conversion characteristics.

Integral nonlinearity error (INL)

Integral nonlinearity error is the maximum deviation between the ideal line when the measured offset and full-scale errors are zeroed, and the actual output code.

Differential nonlinearity error (DNL)

Differential nonlinearity error is the difference between 1-LSB width based on the ideal A/D conversion characteristics and the width of the actual output code.

Offset error

Offset error is the difference between a transition point of the ideal first output code and the actual first output code.

Full-scale error

Full-scale error is the difference between a transition point of the ideal last output code and the actual last output code.

5.5 Programmable Gain Amplifier Characteristics

Table 5.34 Programmable Gain Amplifier Characteristics

Conditions: VCC = 2.7 V to AVCC0, AVCC0 = AVCC1 = AVCC2 = VREFH0 = VREFH1 = VREFH2 = 4.5 V to 5.5 V, VSS = AVSS0 = AVSS1 = AVSS2 = VREFL0 = VREFL1 = VREFL2 = 0 V, T_a = –40 to +85°C

Item		Symbol	Min.	Typ.	Max.	Unit	Test Conditions
Input offset voltage		V_{poff}	—	—	8	mV	
Input voltage range		V_{pin}	(V_{pout} (min) – PGAVSSin)/G + PGAVSSin	—	(V_{pout} (max) – PGAVSSin)/G + PGAVSSin	V	
PGAVSS input voltage range		PGAVSSin	–0.3	—	0.3	V	
Output voltage range	G = 2.000, 2.500, 3.077, 3.636, 4.000, 4.444	V_{pout}	0.1 × AVCC	—	0.9 × AVCC	V	
	G = 5.000, 6.667, 8.000, 10.000, 13.333		0.15 × AVCC	—	0.85 × AVCC		
Gain		G	2.000	—	13.333		
Gain error	G = 2.000, 2.500, 3.077	G_{err}	—	±1.0	±2.0	%	0V ≤ PGAVSS ≤ +0.3V
	G = 3.636, 4.000, 4.444		—	±1.5	±3.0		
	G = 5.000, 6.667, 8.000, 10.000, 13.333		—	±2.0	±4.0		
	G = 2.000, 2.500, 3.077		—	±1.0	±3.0		–0.3V ≤ PGAVSS < 0V
	G = 3.636, 4.000, 4.444		—	±1.5	±4.0		
	G = 5.000, 6.667, 8.000, 10.000, 13.333		—	±2.0	±5.0		
Slew rate		SR	10	—	—	V/μs	
Operation stabilization wait time		t_{start}	—	—	5.0	μs	

5.6 Comparator Characteristics

Table 5.35 Comparator Characteristics

Conditions: VCC = 2.7 V to 5.5 V, AVCC0 = AVCC1 = AVCC2 = VREFH0 = VREFH1 = VREFH2 = VCC to 5.5 V, VSS = AVSS0 = AVSS1 = AVSS2 = VREFL0 = VREFL1 = VREFL2 = 0 V, T_a = –40 to +85°C

Item	Symbol	Min.	Typ.	Max.	Unit	Test Conditions
Offset voltage	V_{cioff}	—	—	40	mV	
Response time	t_{cr}	—	—	200	ns	VOD = 100 mV CMPCTL.CDFS = 0
	t_{cf}	—	—	200	ns	
Stabilization wait time for input selection	t_{cwait}	300	—	—	ns	
Operation stabilization wait time	t_{cmp}		—	1	μs	

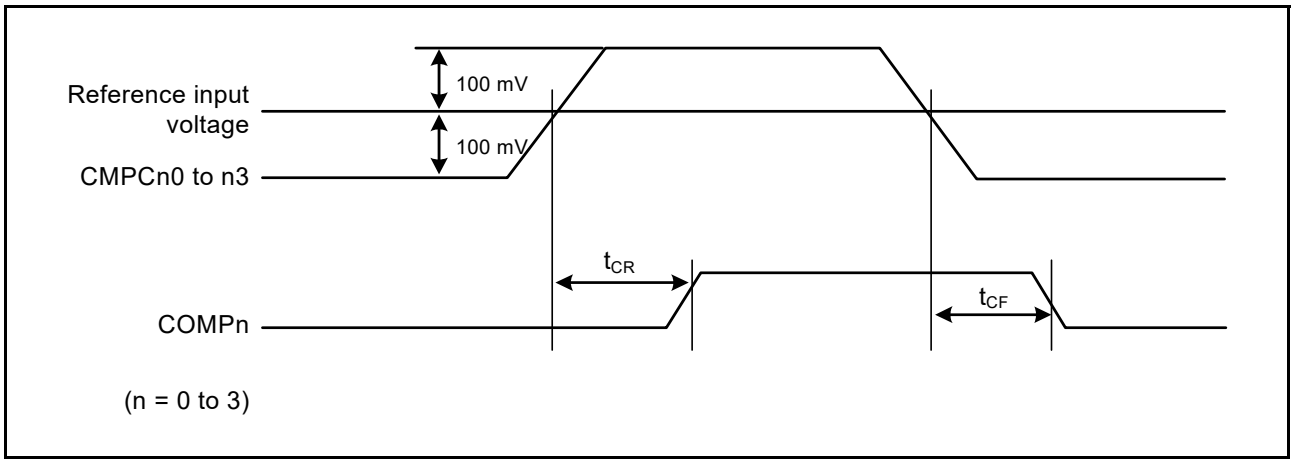

Figure 5.52 Comparator Response Time

5.7 D/A Conversion Characteristics

Table 5.36 D/A Conversion Characteristics

Conditions: VCC = 2.7 V to 5.5 V, AVCC0 = AVCC1 = AVCC2 = VREFH0 = VREFH1 = VREFH2 = VCC to 5.5 V, VSS = AVSS0 = AVSS1 = AVSS2 = VREFL0 = VREFL1 = VREFL2 = 0 V, T_a = –40 to +85°C

Item	Symbol	Min.	Typ.	Max.	Unit	Test Conditions
Resolution	—	—	—	8	Bit	
Conversion time	t_{DCONV}	—	—	3.0	μs	
Absolute accuracy	—	—	—	±3.0	LSB	
Output load resistance	—	4	—	—	MΩ	
Output load capacity	—	—	—	35	pF	
Output resistance	—	—	9.0	—	kΩ	

Note: When using ports 23 and 24 as DA0 and DA1 outputs, make sure that VCC ≥ DA output voltage.

5.8 Power-On Reset Circuit and Voltage Detection Circuit Characteristics

Table 5.37 Power-On Reset Circuit and Voltage Detection Circuit Characteristics (1)

Conditions: VCC = 0 V to 5.5 V, AVCC0 = AVCC1 = AVCC2 = VREFH0 = VREFH1 = VREFH2 = VCC to 5.5 V, VSS = AVSS0 = AVSS1 = AVSS2 = VREFL0 = VREFL1 = VREFL2 = 0 V, T_a = –40 to +85°C

Item		Symbol	Min.	Typ.	Max.	Unit	Test Conditions
Voltage detection level	Power-on reset (POR)	V_{POR}	1.35	1.50	1.65	V	Figure 5.53, Figure 5.54
	Voltage detection circuit (LVD0)*1	V_{det0_0}	3.67	3.84	3.97	V	
		V_{det0_1}	2.70	2.82	3.00		
		V_{det0_2}	2.37	2.51	2.67		
	Voltage detection circuit (LVD1)*2	V_{det1_0}	4.12	4.29	4.42	V	Figure 5.56 At falling edge VCC
		V_{det1_1}	3.98	4.14	4.28		
		V_{det1_2}	3.86	4.02	4.16		
		V_{det1_3}	3.68	3.84	3.98		
		V_{det1_4}	2.99	3.10	3.29		
		V_{det1_5}	2.89	3.00	3.19		
		V_{det1_6}	2.79	2.90	3.09		
		V_{det1_7}	2.68	2.79	2.98		
		V_{det1_8}	2.57	2.68	2.87		
	Voltage detection circuit (LVD2)*3	V_{det2_0}	4.08	4.29	4.48		Figure 5.57 At falling edge VCC
		V_{det2_1}	3.95	4.14	4.35		
		V_{det2_2}	3.82	4.02	4.22		
		V_{det2_3}	3.62	3.84	4.02		

Note: These characteristics apply when noise is not superimposed on the power supply. When a setting is made so that the voltage detection level overlaps with that of the voltage detection circuit (LVD2), it cannot be specified which of LVD1 and LVD2 is used for voltage detection.

Note 1. n in the symbol V_{det0_n} denotes the value of the LVDS0[1:0] bits.

Note 2. n in the symbol V_{det1_n} denotes the value of the LVDLVLR.LVD1LVL[3:0] bits.

Note 3. n in the symbol V_{det2_n} denotes the value of the LVDLVLR.LVD2LVL[3:0] bits.

Table 5.38 Power-On Reset Circuit and Voltage Detection Circuit Characteristics (2)

Conditions: VCC = 0 V to 5.5 V, AVCC0 = AVCC1 = AVCC2 = VREFH0 = VREFH1 = VREFH2 = VCC to 5.5 V, VSS = AVSS0 = AVSS1 = AVSS2 = VREFL0 = VREFL1 = VREFL2 = 0 V, T_a = –40 to +85°C

Item		Symbol	Min.	Typ.	Max.	Unit	Test Conditions
Wait time after power-on reset cancellation	At normal startup	t_{POR}	—	28.4	—	ms	Figure 5.54
Wait time after voltage monitoring 0 reset cancellation		t_{LVD0}	—	568	—	μs	Figure 5.55
Wait time after voltage monitoring 1 reset cancellation		t_{LVD1}	—	100	—	μs	Figure 5.56
Wait time after voltage monitoring 2 reset cancellation		t_{LVD2}	—	100	—	μs	Figure 5.57
Response delay time		t_{det}	—	—	350	μs	Figure 5.53
Minimum VCC down time*1		t_{VOFF}	350	—	—	μs	Figure 5.53, VCC = 1.0 V or above
Power-on reset enable time		$t_{W(POR)}$	1	—	—	ms	Figure 5.54, VCC = below 1.0 V
LVD operation stabilization time (after LVD is enabled)		$Td_{(E-A)}$	—	—	300	μs	Figure 5.56, Figure 5.57
Hysteresis width (LVD0, LVD1 and LVD2)		V_{LVH}	—	70	—	mV	Vdet1_0 to 4 selected
			—	60	—		Vdet0_0 to 2 selected Vdet1_5 to 8 selected LVD2 selected

Note: These characteristics apply when noise is not superimposed on the power supply. When a setting is made so that the voltage detection level overlaps with that of the voltage detection circuit (LVD1), it cannot be specified which of LVD1 and LVD2 is used for voltage detection.

Note 1. The minimum VCC down time indicates the time when VCC is below the minimum value of voltage detection levels V_{POR}, V_{det0}, V_{det1}, and V_{det2} for the POR/LVD.

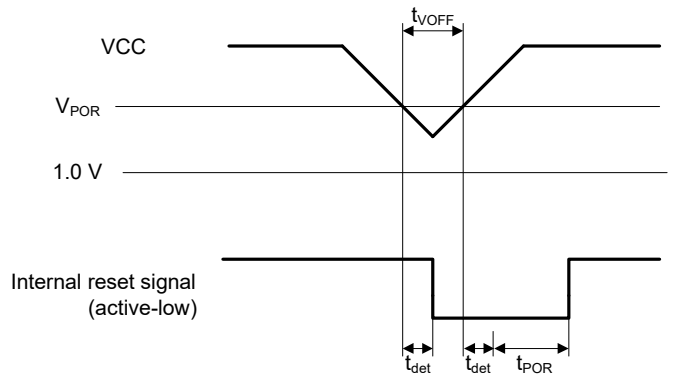

Figure 5.53 Voltage Detection Reset Timing

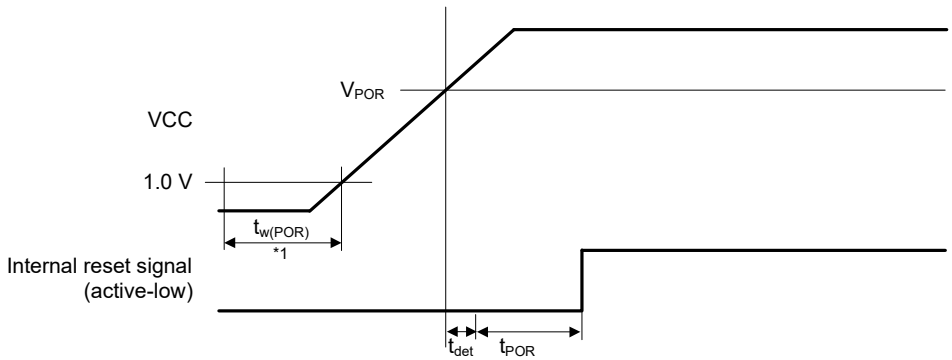

Note 1. $t_{w(POR)}$ is the time required for a power-on reset to be enabled while the external power VCC is being held below the valid voltage (1.0 V).
When VCC turns on, maintain $t_{w(POR)}$ for 1.0 ms or more.

Figure 5.54 Power-On Reset Timing

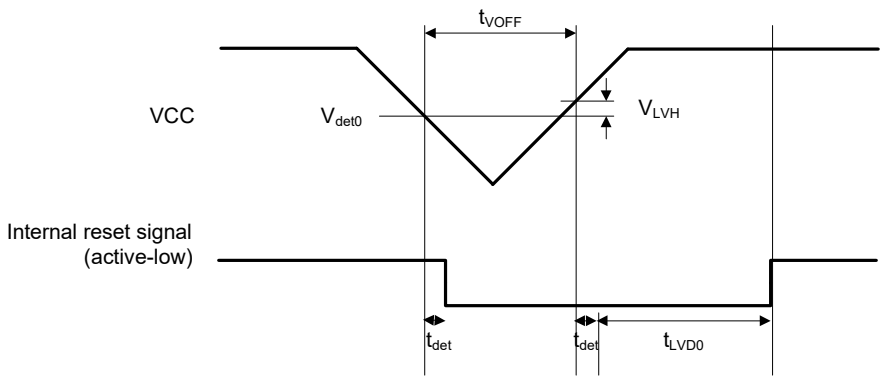

Figure 5.55 Voltage Detection Circuit Timing (V_{det0})

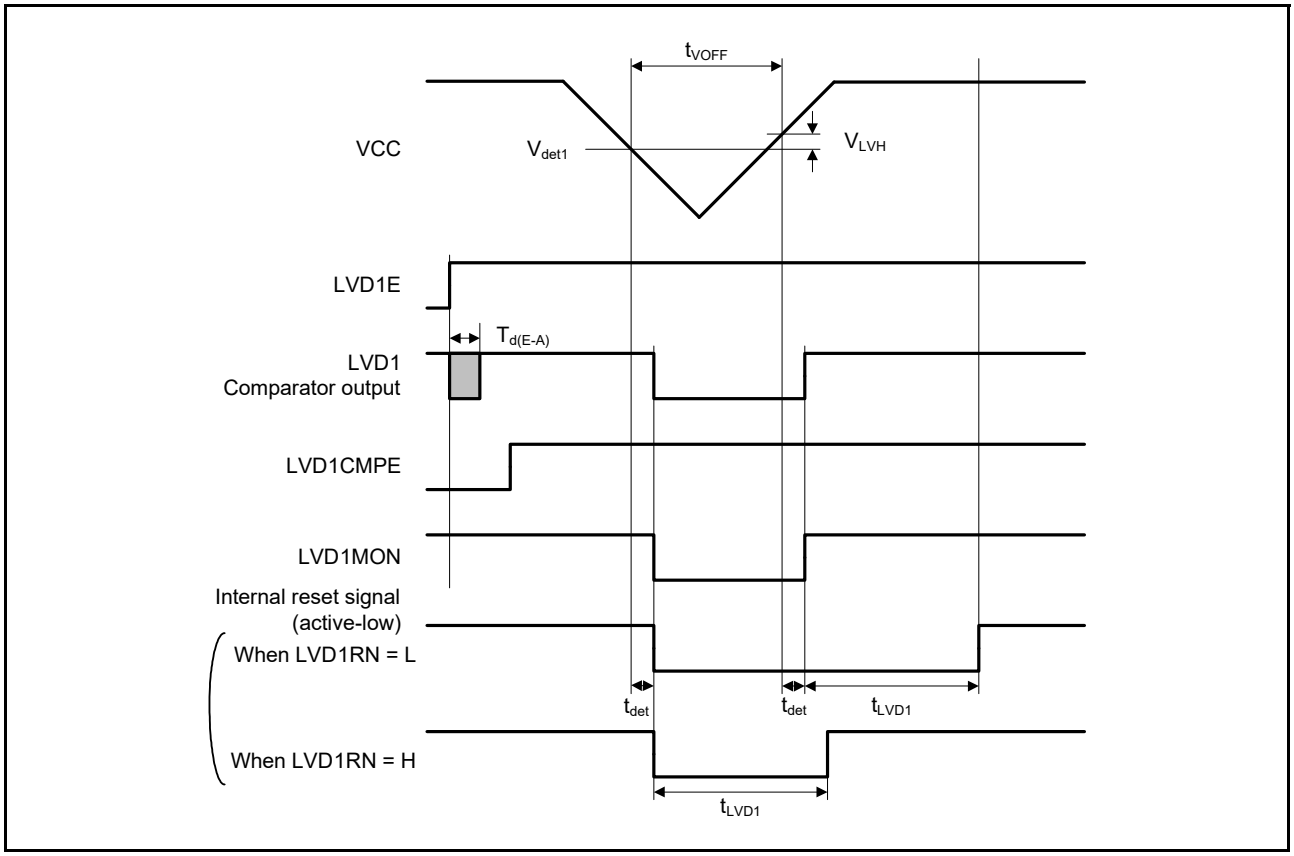

Figure 5.56 Voltage Detection Circuit Timing (V_{det1})

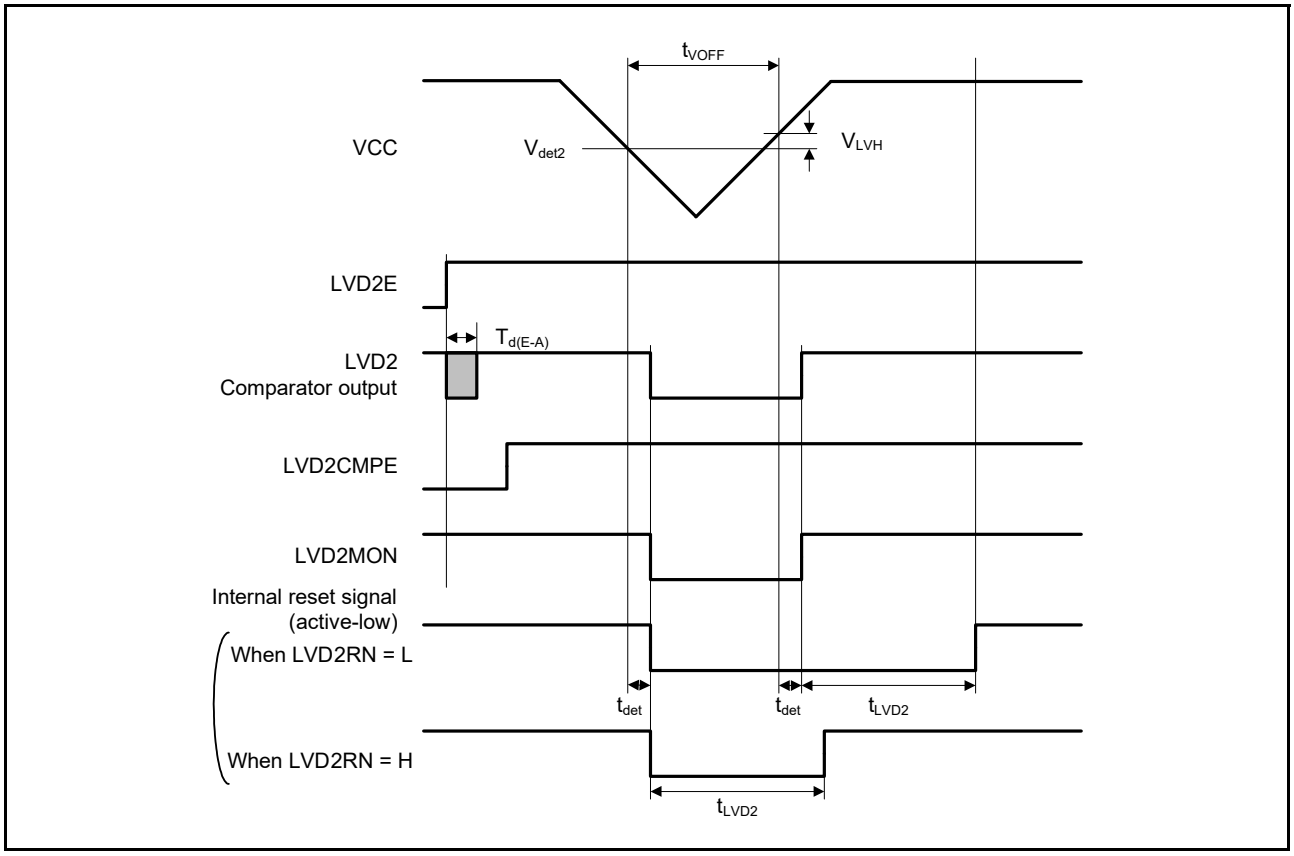

Figure 5.57 Voltage Detection Circuit Timing (V_{det2})

5.9 Oscillation Stop Detection Timing

Table 5.39 Oscillation Stop Detection Timing

Conditions: VCC = 2.7 V to 5.5 V, AVCC0 =AVCC1 = AVCC2 = VREFH0 = VREFH1 = VREFH2 = VCC to 5.5 V, VSS = AVSS0 = AVSS1 = AVSS2 = VREFL0 = VREFL1 = VREFL2 = 0 V, T_a = –40 to +85°C

Item	Symbol	Min.	Typ.	Max.	Unit	Test Conditions
Detection time	t_{dr}	—	—	1	ms	Figure 5.58

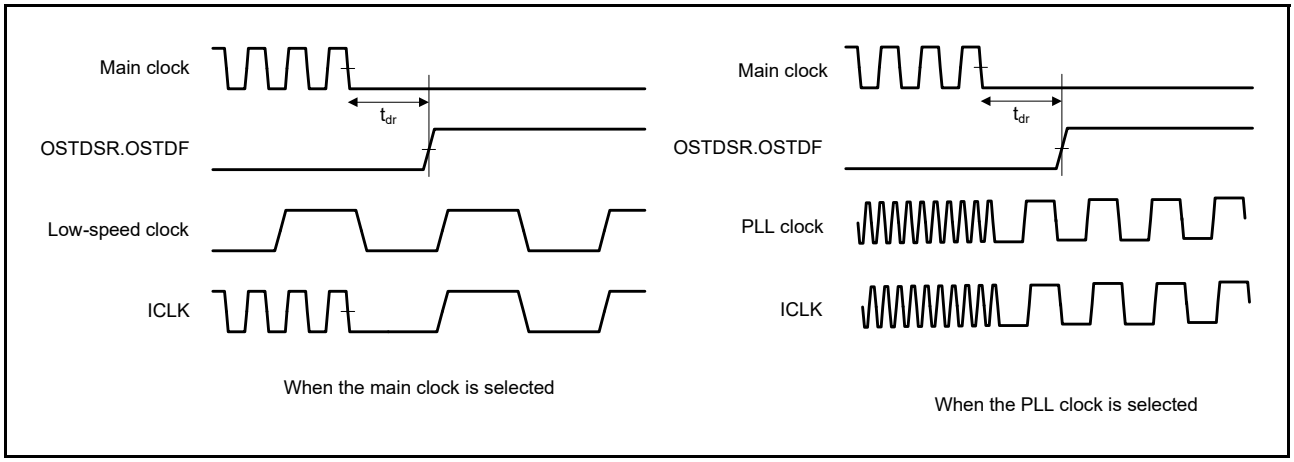

Figure 5.58 Oscillation Stop Detection Timing

5.10 ROM (Flash Memory for Code Storage) Characteristics

Table 5.40 ROM (Flash Memory for Code Storage) Characteristics (1)

Item		Symbol	Min.	Typ.	Max.	Unit	Conditions
Reprogramming/erasure cycle*1		N_{PEC}	1000	—	—	Times	
Data hold time	After 1000 times of N_{PEC}	t_{DRP}	20*2, *3	—	—	Year	T_a = +85°C

Note 1. Definition of reprogram/erase cycle: The reprogram/erase cycle is the number of erasing for each block. When the reprogram/erase cycle is n times (n = 1000), erasing can be performed n times for each block. For instance, when 4-byte programming is performed 256 times for different addresses in 1-Kbyte block and then the entire block is erased, the reprogram/erase cycle is counted as one. However, programming the same address for several times as one erasing is not enabled (overwriting is prohibited).
Note 2. Characteristic when using the flash memory programmer and the self-programming library provided from Renesas Electronics.
Note 3. This result is obtained from reliability testing.

Table 5.41 ROM (Flash Memory for Code Storage) Characteristics (2): High-Speed Operating Mode

Conditions: VCC = 2.7 V to 5.5 V, AVCC0 = AVCC1 = AVCC2 = VREFH0 = VREFH1 = VREFH2 = VCC to 5.5 V,
VSS = AVSS0 = AVSS1 = AVSS2 = VREFL0 = VREFL1 = VREFL2 = 0 V

Temperature range for the programming/erasure operation: T_a = –40 to +85°C

Item		Symbol	FCLK = 1 MHz			FCLK = 32 MHz			Unit
			Min.	Typ.	Max.	Min.	Typ.	Max.	
Programming time	8-byte	t_{P8}	—	112.0	967.0	—	52.3	490.5	μs
Erasure time	2-Kbyte	t_{E2K}	—	8.7	278.1	—	5.5	214.6	ms
	512-Kbyte (when block erase command used)	t_{E512K}	—	927.8	19218.0	—	72.0	1678.9	ms
	512-Kbyte (when all-block erase command used)	t_{EA512K}	—	922.7	19013.4	—	66.7	1469.2	ms
Blank check time	8-byte	t_{BC8}	—	—	55.0	—	—	16.1	μs
	2-Kbyte	t_{BC2K}	—	—	1840.0	—	—	135.7	μs
Erase operation forcible stop time		t_{SED}	—	—	18.0	—	—	10.7	μs
Start-up area switching setting time		t_{SAS}	—	12.3	566.5	—	6.2	433.5	ms
Access window time		t_{AWS}	—	12.3	566.5	—	6.2	433.5	ms
ROM mode transition wait time 1		t_{DIS}	2.0	—	—	2.0	—	—	μs
ROM mode transition wait time 2		t_{MS}	5.0	—	—	5.0	—	—	μs

Note: Does not include the time until each operation of the flash memory is started after instructions are executed by software.
Note: The lower-limit frequency of FCLK is 1 MHz during programming or erasing of the flash memory. When using FCLK at below 4 MHz, the frequency can be set to 1 MHz, 2 MHz, or 3 MHz. A non-integer frequency such as 1.5 MHz cannot be set.
Note: The frequency accuracy of FCLK should be ±3.5%.

Table 5.42 ROM (Flash Memory for Code Storage) Characteristics (3): Middle-Speed Operating Mode

Conditions: VCC = 2.7 V to 5.5 V, AVCC0 = AVCC1 = AVCC2 = VREFH0 = VREFH1 = VREFH2 = VCC to 5.5 V, VSS = AVSS0 = AVSS1 = AVSS2 = VREFL0 = VREFL1 = VREFL2 = 0 V

Temperature range for the programming/erasure operation: T_a = –40 to +85°C

Item		Symbol	FCLK = 1 MHz			FCLK = 8 MHz			Unit
			Min.	Typ.	Max.	Min.	Typ.	Max.	
Programming time	8-byte	t_{P8}	—	152.0	1367.0	—	97.9	936.0	μs
Erasure time	2-Kbyte	t_{E2K}	—	8.8	279.7	—	5.9	220.8	ms
	512-Kbyte (when block erase command used)	t_{E512K}	—	928.0	19221.2	—	190.6	4107.3	ms
	512-Kbyte (when all-block erase command used)	t_{EA512K}	—	922.7	19015.0	—	185.4	3901.0	ms
Blank check time	8-byte	t_{BC8}	—	—	85.0	—	—	50.9	μs
	2-Kbyte	t_{BC2K}	—	—	1870.0	—	—	401.5	μs
Erase operation forcible stop time		t_{SED}	—	—	28.0	—	—	21.3	μs
Start-up area switching setting time		t_{SAS}	—	13.0	573.3	—	7.7	450.1	ms
Access window time		t_{AWS}	—	13.0	573.3	—	7.7	450.1	ms
ROM mode transition wait time 1		t_{DIS}	2.0	—	—	2.0	—	—	μs
ROM mode transition wait time 2		t_{MS}	3.0	—	—	3.0	—	—	μs

Note: Does not include the time until each operation of the flash memory is started after instructions are executed by software.

Note: The lower-limit frequency of FCLK is 1 MHz during programming or erasing of the flash memory. When using FCLK at below 4 MHz, the frequency can be set to 1 MHz, 2 MHz, or 3 MHz. A non-integer frequency such as 1.5 MHz cannot be set.

Note: The frequency accuracy of FCLK should be ±3.5%.

5.11 E2 DataFlash Characteristics

Table 5.43 E2 DataFlash Characteristics (1)

Item		Symbol	Min.	Typ.	Max.	Unit	Conditions
Reprogramming/erasure cycle*1		N_{DPEC}	100000	1000000	—	Times	
Data hold time	After 10000 times of N_{DPEC}	t_{DDRP}	20*2, *3	—	—	Year	T_a = +85°C
	After 100000 times of N_{DPEC}		5*2, *3	—	—	Year	
	After 1000000 times of N_{DPEC}		—	1*2, *3	—	Year	T_a = +25°C

Note 1. Definition of reprogram/erase cycle: The reprogram/erase cycle is the number of erasing for each block. When the reprogram/erase cycle is n times (n = 100000), erasing can be performed n times for each block. For instance, when 1-byte programming is performed 1000 times for different addresses in 1-Kbyte block and then the entire block is erased, the reprogram/erase cycle is counted as one. However, programming the same address for several times as one erasing is not enabled (overwriting is prohibited).
Note 2. Characteristic when using the flash memory programmer and the self-programming library provided from Renesas Electronics.
Note 3. This result is obtained from reliability testing.

Table 5.44 E2 DataFlash Characteristics (2): High-Speed Operating Mode

Conditions: VCC = 2.7 V to 5.5 V, AVCC0 = AVCC1 = AVCC2 = VREFH0 = VREFH1 = VREFH2 = VCC to 5.5 V,
VSS = AVSS0 = AVSS1 = AVSS2 = VREFL0 = VREFL1 = VREFL2 = 0 V,

Temperature range for the programming/erasure operation: T_a = –40 to +85°C

Item		Symbol	FCLK = 1 MHz			FCLK = 32 MHz			Unit
			Min.	Typ.	Max.	Min.	Typ.	Max.	
Programming time	1-byte	t_{Dp1}	—	95.0	797.0	—	40.8	375.5	μs
Erasure time	1-Kbyte	t_{DE1K}	—	19.5	498.5	—	6.2	229.4	ms
	8-Kbyte	t_{DE8K}	—	119.8	2555.7	—	12.9	367.2	ms
Blank check time	1-byte	t_{DBC1}	—	—	55.0	—	—	16.1	μs
	1-Kbyte	t_{DBC1K}	—	—	7216.0	—	—	495.7	μs
Erase operation forcible stop time		t_{DSED}	—	—	16.0	—	—	10.7	μs
Data flash-module stop release time		t_{DSTOP}	5.0	—	—	5.0	—	—	μs

Note: Does not include the time until each operation of the flash memory is started after instructions are executed by software.
Note: The lower-limit frequency of FCLK is 1 MHz during programming or erasing of the flash memory. When using FCLK at below 4 MHz, the frequency can be set to 1 MHz, 2 MHz, or 3 MHz. A non-integer frequency such as 1.5 MHz cannot be set.
Note: The frequency accuracy of FCLK should be ±3.5%.

Table 5.45 E2 DataFlash Characteristics (3): Middle-Speed Operating Mode

Conditions: VCC = 2.7 V to 5.5 V, AVCC0 = AVCC1 = AVCC2 = VREFH0 = VREFH1 = VREFH2 = VCC to 5.5 V,
VSS = AVSS0 = AVSS1 = AVSS2 = VREFL0 = VREFL1 = VREFL2 = 0 V,

Temperature range for the programming/erasure operation: T_a = –40 to +85°C

Item		Symbol	FCLK = 1 MHz			FCLK = 8 MHz			Unit
			Min.	Typ.	Max.	Min.	Typ.	Max.	
Programming time	1-byte	t_{Dp1}	—	135.0	1197.0	—	86.5	822.5	μs
Erasure time	1-Kbyte	t_{DE1K}	—	19.6	500.1	—	8.0	264.1	ms
	8-Kbyte	t_{DE8K}	—	119.9	2557.4	—	27.7	668.2	ms
Blank check time	1-byte	t_{DBC1}	—	—	85.0	—	—	50.9	μs
	1-Kbyte	t_{DBC1K}	—	—	7246.0	—	—	1457.5	μs
Erase operation forcible stop time		t_{DSED}	—	—	28.0	—	—	21.3	μs
Data flash-module stop release time		t_{DSTOP}	0.72	—	—	0.72	—	—	μs

Note: Does not include the time until each operation of the flash memory is started after instructions are executed by software.
Note: The lower-limit frequency of FCLK is 1 MHz during programming or erasing of the flash memory. When using FCLK at below 4 MHz, the frequency can be set to 1 MHz, 2 MHz, or 3 MHz. A non-integer frequency such as 1.5 MHz cannot be set.
Note: The frequency accuracy of FCLK should be ±3.5%.

5.12 Usage Notes

5.12.1 Connecting VCL Capacitor and Bypass Capacitors

This MCU integrates an internal voltage-down circuit, which is used for lowering the power supply voltage in the internal MCU to adjust automatically to the optimum level. A 4.7-µF capacitor needs to be connected between this internal voltage-down power supply (VCL pin) and VSS pin. Figure 5.59 and Figure 5.60 shows how to connect external capacitors. Place an external capacitor close to the pins. Do not apply the power supply voltage to the VCL pin. Insert a multilayer ceramic capacitor as a bypass capacitor between each pair of the power supply pins. Implement a bypass capacitor to the MCU power supply pins as close as possible. Use a recommended value of 0.1 µF as the capacitance of the capacitors. For the capacitors related to crystal oscillation, see section 9, Clock Generation Circuit in the User's Manual: Hardware. For the capacitors related to analog modules, also see section 31, 12-Bit A/D Converter (S12ADF) in the User's Manual: Hardware.

For notes on designing the printed circuit board, see the descriptions of the application note "Hardware Design Guide" (R01AN1411EJ). The latest version can be downloaded from Renesas Electronics Website.

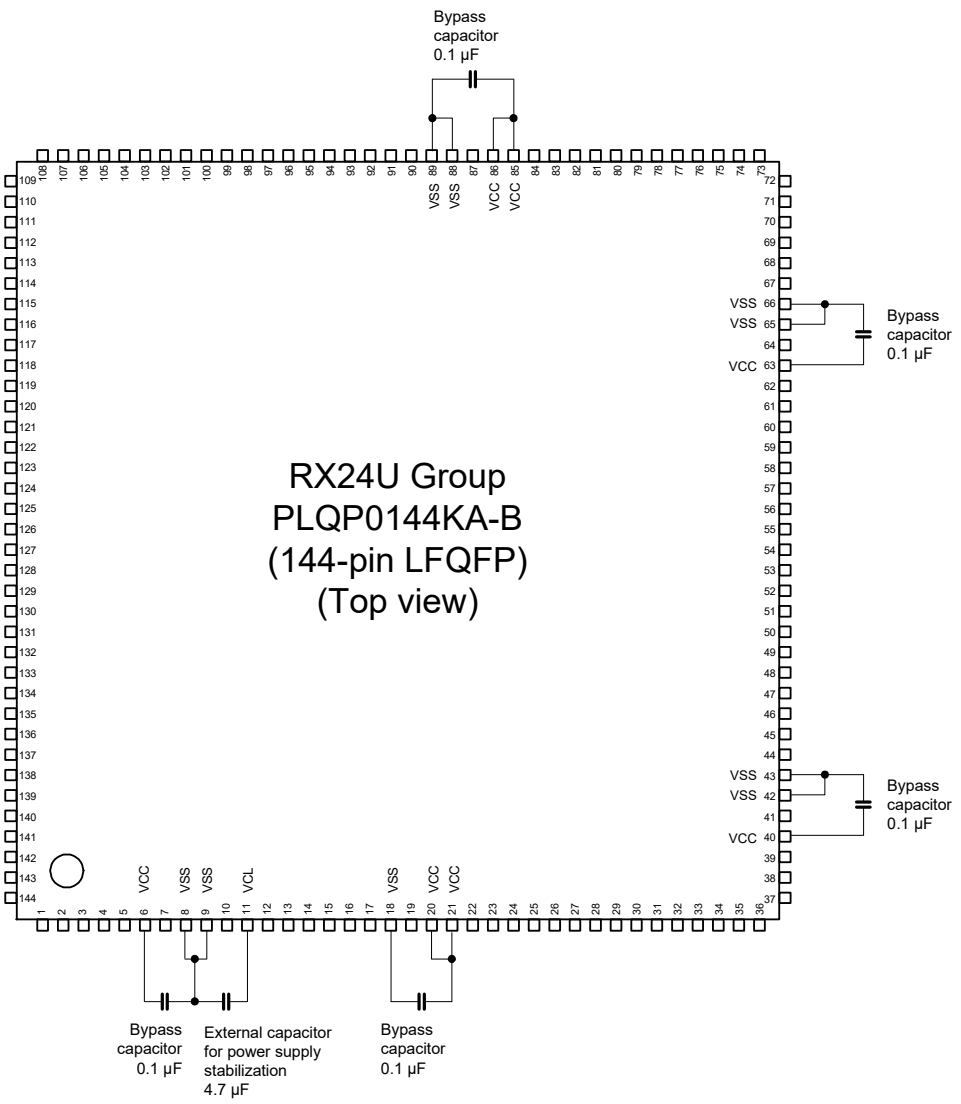

Note: Do not apply the power supply voltage to the VCL pin.
Use a 4.7-µF multilayer ceramic for the VCL pin and place it close to the pin.
A recommended value is shown for the capacitance of the bypass capacitors.

Figure 5.59 Connecting Capacitors (144 Pins)

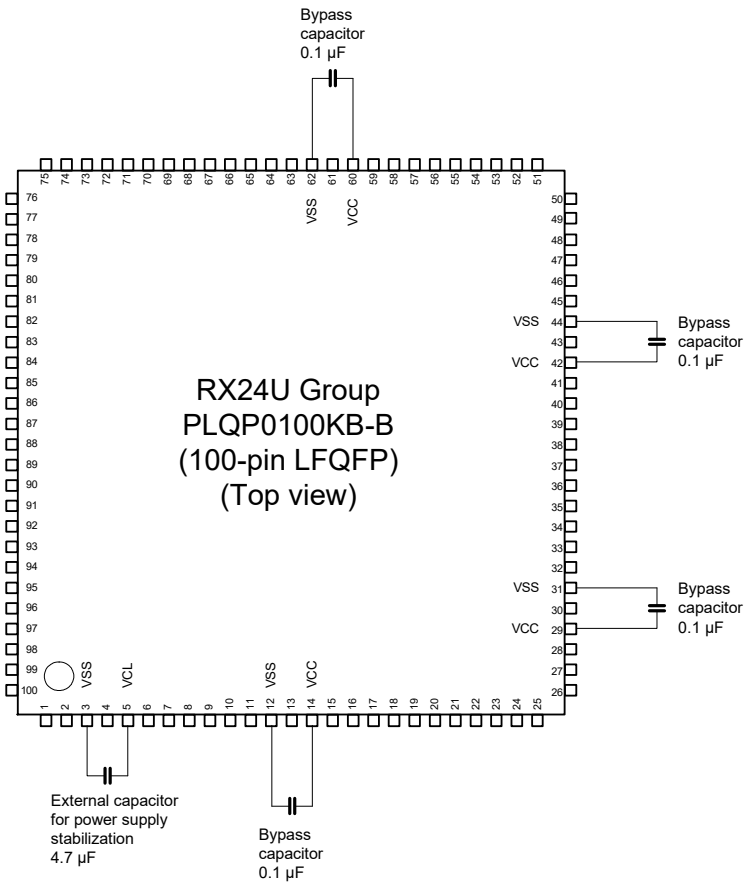

Note: Do not apply the power supply voltage to the VCL pin.
Use a 4.7-μF multilayer ceramic for the VCL pin and place it close to the pin.
A recommended value is shown for the capacitance of the bypass capacitors.

Figure 5.60 Connecting Capacitors (100 Pins)

Appendix 1. Package Dimensions

Information on the latest version of the package dimensions or mountings has been displayed in “Packages” on Renesas Electronics Corporation website.

JEITA Package Code	RENESAS Code	Previous Code	MASS (Typ) [g]
P-LFQFP144-20x20-0.50	PLQP0144KA-B	—	1.2

Unit: mm

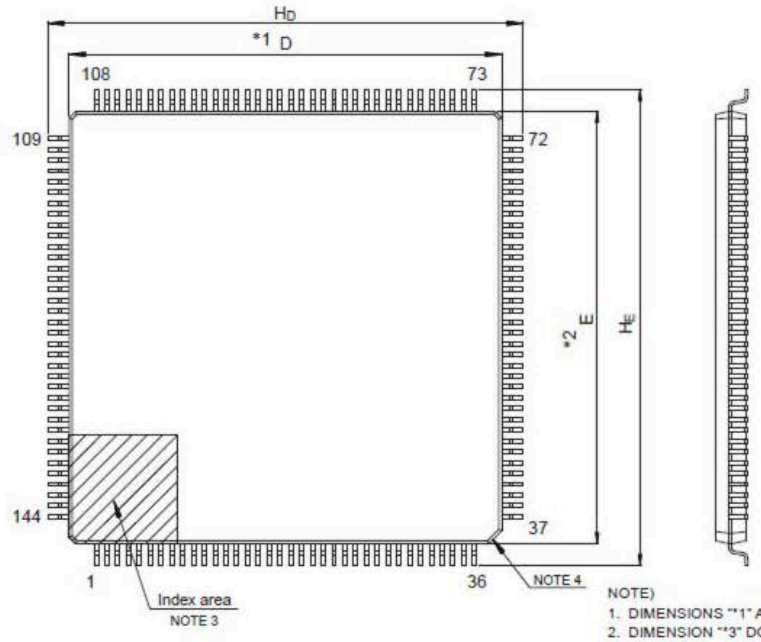

NOTE)
1. DIMENSIONS "*1" AND "*2" DO NOT INCLUDE MOLD FLASH.
2. DIMENSION "*3" DOES NOT INCLUDE TRIM OFFSET.
3. PIN 1 VISUAL INDEX FEATURE MAY VARY, BUT MUST BE LOCATED WITHIN THE HATCHED AREA.
4. CHAMFERS AT CORNERS ARE OPTIONAL, SIZE MAY VARY.

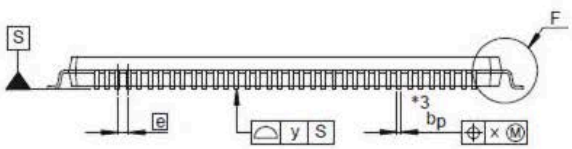

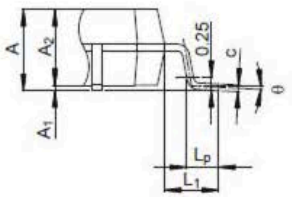

Detail F

Reference Symbol	Dimensions in millimeters		
	Min	Nom	Max
D	19.9	20.0	20.1
E	19.9	20.0	20.1
A_2	—	1.4	—
H_D	21.8	22.0	22.2
H_E	21.8	22.0	22.2
A	—	—	1.7
A_1	0.05	—	0.15
b_p	0.17	0.20	0.27
c	0.09	—	0.20
θ	0°	3.5°	8°
e	—	0.5	—
x	—	—	0.08
y	—	—	0.08
L_p	0.45	0.6	0.75
L_1	—	1.0	—

Figure A 144-Pin LFQFP (PLQP0144KA-B)

JEITA Package Code	RENESAS Code	Previous Code	MASS (Typ) [g]
P-LFQFP100-14x14-0.50	PLQP0100KB-B	—	0.6

Unit: mm

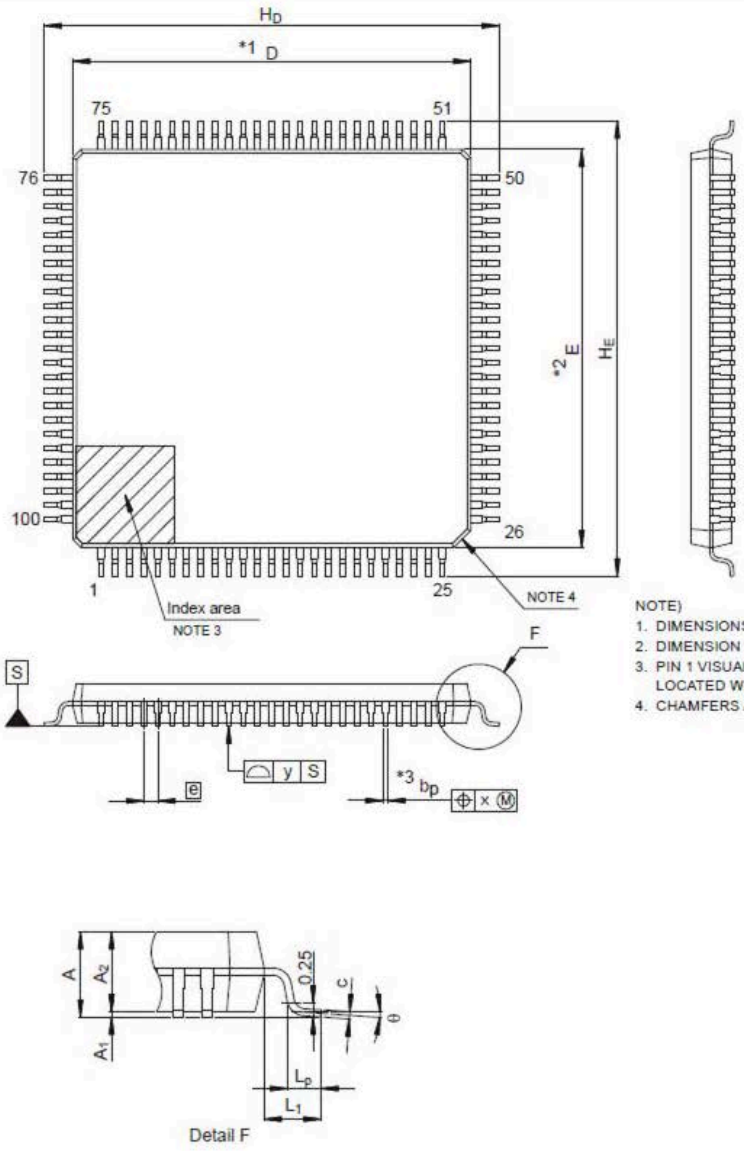

NOTE)
1. DIMENSIONS "*1" AND "*2" DO NOT INCLUDE MOLD FLASH.
2. DIMENSION "*3" DOES NOT INCLUDE TRIM OFFSET.
3. PIN 1 VISUAL INDEX FEATURE MAY VARY, BUT MUST BE LOCATED WITHIN THE HATCHED AREA.
4. CHAMFERS AT CORNERS ARE OPTIONAL, SIZE MAY VARY.

Reference Symbol	Dimensions in millimeters		
	Min	Nom	Max
D	13.9	14.0	14.1
E	13.9	14.0	14.1
A_2	—	1.4	—
H_D	15.8	16.0	16.2
H_E	15.8	16.0	16.2
A	—	—	1.7
A_1	0.05	—	0.15
b_p	0.15	0.20	0.27
c	0.09	—	0.20
θ	0°	3.5°	8°
e	—	0.5	—
x	—	—	0.08
y	—	—	0.08
L_p	0.45	0.6	0.75
L_1	—	1.0	—

Figure B 100-Pin LFQFP (PLQP0100KB-B)

REVISION HISTORY	RX24U Group Datasheet

Classifications
- Items with Technical Update document number: Changes according to the corresponding issued Technical Update
- Items without Technical Update document number: Minor changes that do not require Technical Update to be issued

Rev.	Date	Description		Classification
		Page	Summary	
1.00	Mar 31, 2017	—	First edition, issued	

All trademarks and registered trademarks are the property of their respective owners.

NOTES FOR CMOS DEVICES

(1) VOLTAGE APPLICATION WAVEFORM AT INPUT PIN: Waveform distortion due to input noise or a reflected wave may cause malfunction. If the input of the CMOS device stays in the area between VIL (MAX) and VIH (MIN) due to noise, etc., the device may malfunction. Take care to prevent chattering noise from entering the device when the input level is fixed, and also in the transition period when the input level passes through the area between VIL (MAX) and VIH (MIN).

(2) HANDLING OF UNUSED INPUT PINS: Unconnected CMOS device inputs can be cause of malfunction. If an input pin is unconnected, it is possible that an internal input level may be generated due to noise, etc., causing malfunction. CMOS devices behave differently than Bipolar or NMOS devices. Input levels of CMOS devices must be fixed high or low by using pull-up or pull-down circuitry. Each unused pin should be connected to VDD or GND via a resistor if there is a possibility that it will be an output pin. All handling related to unused pins must be judged separately for each device and according to related specifications governing the device.

(3) PRECAUTION AGAINST ESD: A strong electric field, when exposed to a MOS device, can cause destruction of the gate oxide and ultimately degrade the device operation. Steps must be taken to stop generation of static electricity as much as possible, and quickly dissipate it when it has occurred. Environmental control must be adequate. When it is dry, a humidifier should be used. It is recommended to avoid using insulators that easily build up static electricity. Semiconductor devices must be stored and transported in an anti-static container, static shielding bag or conductive material. All test and measurement tools including work benches and floors should be grounded. The operator should be grounded using a wrist strap. Semiconductor devices must not be touched with bare hands. Similar precautions need to be taken for PW boards with mounted semiconductor devices.

(4) STATUS BEFORE INITIALIZATION: Power-on does not necessarily define the initial status of a MOS device. Immediately after the power source is turned ON, devices with reset functions have not yet been initialized. Hence, power-on does not guarantee output pin levels, I/O settings or contents of registers. A device is not initialized until the reset signal is received. A reset operation must be executed immediately after power-on for devices with reset functions.

(5) POWER ON/OFF SEQUENCE: In the case of a device that uses different power supplies for the internal operation and external interface, as a rule, switch on the external power supply after switching on the internal power supply. When switching the power supply off, as a rule, switch off the external power supply and then the internal power supply. Use of the reverse power on/off sequences may result in the application of an overvoltage to the internal elements of the device, causing malfunction and degradation of internal elements due to the passage of an abnormal current. The correct power on/off sequence must be judged separately for each device and according to related specifications governing the device.

(6) INPUT OF SIGNAL DURING POWER OFF STATE : Do not input signals or an I/O pull-up power supply while the device is not powered. The current injection that results from input of such a signal or I/O pull-up power supply may cause malfunction and the abnormal current that passes in the device at this time may cause degradation of internal elements. Input of signals during the power off state must be judged separately for each device and according to related specifications governing the device.

General Precautions in the Handling of Microprocessing Unit and Microcontroller Unit Products

The following usage notes are applicable to all Microprocessing unit and Microcontroller unit products from Renesas. For detailed usage notes on the products covered by this document, refer to the relevant sections of the document as well as any technical updates that have been issued for the products.

1. Handling of Unused Pins

   Handle unused pins in accordance with the directions given under Handling of Unused Pins in the manual.

   ¾ The input pins of CMOS products are generally in the high-impedance state. In operation with an unused pin in the open-circuit state, extra electromagnetic noise is induced in the vicinity of LSI, an associated shoot-through current flows internally, and malfunctions occur due to the false recognition of the pin state as an input signal become possible. Unused pins should be handled as described under Handling of Unused Pins in the manual.

2. Processing at Power-on

   The state of the product is undefined at the moment when power is supplied.

   ¾ The states of internal circuits in the LSI are indeterminate and the states of register settings and pins are undefined at the moment when power is supplied.
   In a finished product where the reset signal is applied to the external reset pin, the states of pins are not guaranteed from the moment when power is supplied until the reset process is completed.
   In a similar way, the states of pins in a product that is reset by an on-chip power-on reset function are not guaranteed from the moment when power is supplied until the power reaches the level at which resetting has been specified.

3. Prohibition of Access to Reserved Addresses

   Access to reserved addresses is prohibited.

   ¾ The reserved addresses are provided for the possible future expansion of functions. Do not access these addresses; the correct operation of LSI is not guaranteed if they are accessed.

4. Clock Signals

   After applying a reset, only release the reset line after the operating clock signal has become stable. When switching the clock signal during program execution, wait until the target clock signal has stabilized.

   ¾ When the clock signal is generated with an external resonator (or from an external oscillator) during a reset, ensure that the reset line is only released after full stabilization of the clock signal. Moreover, when switching to a clock signal produced with an external resonator (or by an external oscillator) while program execution is in progress, wait until the target clock signal is stable.

5. Differences between Products

   Before changing from one product to another, i.e. to a product with a different part number, confirm that the change will not lead to problems.

   ¾ The characteristics of Microprocessing unit or Microcontroller unit products in the same group but having a different part number may differ in terms of the internal memory capacity, layout pattern, and other factors, which can affect the ranges of electrical characteristics, such as characteristic values, operating margins, immunity to noise, and amount of radiated noise. When changing to a product with a different part number, implement a system-evaluation test for the given product.

Notice

1. Descriptions of circuits, software and other related information in this document are provided only to illustrate the operation of semiconductor products and application examples. You are fully responsible for the incorporation or any other use of the circuits, software, and information in the design of your product or system. Renesas Electronics disclaims any and all liability for any losses and damages incurred by you or third parties arising from the use of these circuits, software, or information.
2. Renesas Electronics hereby expressly disclaims any warranties against and liability for infringement or any other disputes involving patents, copyrights, or other intellectual property rights of third parties, by or arising from the use of Renesas Electronics products or technical information described in this document, including but not limited to, the product data, drawing, chart, program, algorithm, application examples.
3. No license, express, implied or otherwise, is granted hereby under any patents, copyrights or other intellectual property rights of Renesas Electronics or others.
4. You shall not alter, modify, copy, or otherwise misappropriate any Renesas Electronics product, whether in whole or in part. Renesas Electronics disclaims any and all liability for any losses or damages incurred by you or third parties arising from such alteration, modification, copy or otherwise misappropriation of Renesas Electronics products.
5. Renesas Electronics products are classified according to the following two quality grades: "Standard" and "High Quality". The intended applications for each Renesas Electronics product depends on the product's quality grade, as indicated below.
   "Standard": Computers; office equipment; communications equipment; test and measurement equipment; audio and visual equipment; home electronic appliances; machine tools; personal electronic equipment; and industrial robots etc.
   "High Quality": Transportation equipment (automobiles, trains, ships, etc.); traffic control (traffic lights); large-scale communication equipment; key financial terminal systems; safety control equipment; etc.
   Renesas Electronics products are neither intended nor authorized for use in products or systems that may pose a direct threat to human life or bodily injury (artificial life support devices or systems, surgical implantations etc.), or may cause serious property damages (space and undersea repeaters; nuclear power control systems; aircraft control systems; key plant systems; military equipment; etc.). Renesas Electronics disclaims any and all liability for any damages or losses incurred by you or third parties arising from the use of any Renesas Electronics product for which the product is not intended by Renesas Electronics.
6. When using the Renesas Electronics products, refer to the latest product information (data sheets, user's manuals, application notes, "General Notes for Handling and Using Semiconductor Devices" in the reliability handbook, etc.), and ensure that usage conditions are within the ranges specified by Renesas Electronics with respect to maximum ratings, operating power supply voltage range, heat radiation characteristics, installation, etc. Renesas Electronics disclaims any and all liability for any malfunctions or failure or accident arising out of the use of Renesas Electronics products beyond such specified ranges.
7. Although Renesas Electronics endeavors to improve the quality and reliability of Renesas Electronics products, semiconductor products have specific characteristics such as the occurrence of failure at a certain rate and malfunctions under certain use conditions. Further, Renesas Electronics products are not subject to radiation resistance design. Please ensure to implement safety measures to guard them against the possibility of bodily injury, injury or damage caused by fire, and social damage in the event of failure or malfunction of Renesas Electronics products, such as safety design for hardware and software including but not limited to redundancy, fire control and malfunction prevention, appropriate treatment for aging degradation or any other appropriate measures by your own responsibility as warranty for your products/system. Because the evaluation of microcomputer software alone is very difficult and not practical, please evaluate the safety of the final products or systems manufactured by you.
8. Please contact a Renesas Electronics sales office for details as to environmental matters such as the environmental compatibility of each Renesas Electronics product. Please investigate applicable laws and regulations that regulate the inclusion or use of controlled substances, including without limitation, the EU RoHS Directive carefully and sufficiently and use Renesas Electronics products in compliance with all these applicable laws and regulations. Renesas Electronics disclaims any and all liability for damages or losses occurring as a result of your noncompliance with applicable laws and regulations.
9. Renesas Electronics products and technologies shall not be used for or incorporated into any products or systems whose manufacture, use, or sale is prohibited under any applicable domestic or foreign laws or regulations. You shall not use Renesas Electronics products or technologies for (1) any purpose relating to the development, design, manufacture, use, stockpiling, etc., of weapons of mass destruction, such as nuclear weapons, chemical weapons, or biological weapons, or missiles (including unmanned aerial vehicles (UAVs)) for delivering such weapons, (2) any purpose relating to the development, design, manufacture, or use of conventional weapons, or (3) any other purpose of disturbing international peace and security, and you shall not sell, export, lease, transfer, or release Renesas Electronics products or technologies to any third party whether directly or indirectly with knowledge or reason to know that the third party or any other party will engage in the activities described above. When exporting, selling, transferring, etc., Renesas Electronics products or technologies, you shall comply with any applicable export control laws and regulations promulgated and administered by the governments of the countries asserting jurisdiction over the parties or transactions.
10. Please acknowledge and agree that you shall bear all the losses and damages which are incurred from the misuse or violation of the terms and conditions described in this document, including this notice, and hold Renesas Electronics harmless, if such misuse or violation results from your resale or making Renesas Electronics products available any third party.
11. This document shall not be reprinted, reproduced or duplicated in any form, in whole or in part, without prior written consent of Renesas Electronics.
12. Please contact a Renesas Electronics sales office if you have any questions regarding the information contained in this document or Renesas Electronics products.

(Note 1) "Renesas Electronics" as used in this document means Renesas Electronics Corporation and also includes its majority-owned subsidiaries.

(Note 2) "Renesas Electronics product(s)" means any product developed or manufactured by or for Renesas Electronics.

(Rev.3.0-1 November 2016)

SALES OFFICES Renesas Electronics Corporation http://www.renesas.com

Refer to "http://www.renesas.com/" for the latest and detailed information.

Renesas Electronics America Inc.
2801 Scott Boulevard Santa Clara, CA 95050-2549, U.S.A.
Tel: +1-408-588-6000, Fax: +1-408-588-6130

Renesas Electronics Canada Limited
9251 Yonge Street, Suite 8309 Richmond Hill, Ontario Canada L4C 9T3
Tel: +1-905-237-2004

Renesas Electronics Europe Limited
Dukes Meadow, Millboard Road, Bourne End, Buckinghamshire, SL8 5FH, U.K
Tel: +44-1628-585-100, Fax: +44-1628-585-900

Renesas Electronics Europe GmbH
Arcadiastrasse 10, 40472 Düsseldorf, Germany
Tel: +49-211-6503-0, Fax: +49-211-6503-1327

Renesas Electronics (China) Co., Ltd.
Room 1709, Quantum Plaza, No.27 ZhiChunLu Haidian District, Beijing 100191, P.R.China
Tel: +86-10-8235-1155, Fax: +86-10-8235-7679

Renesas Electronics (Shanghai) Co., Ltd.
Unit 301, Tower A, Central Towers, 555 Langao Road, Putuo District, Shanghai, P. R. China 200333
Tel: +86-21-2226-0888, Fax: +86-21-2226-0999

Renesas Electronics Hong Kong Limited
Unit 1601-1611, 16/F., Tower 2, Grand Century Place, 193 Prince Edward Road West, Mongkok, Kowloon, Hong Kong
Tel: +852-2265-6688, Fax: +852 2886-9022

Renesas Electronics Taiwan Co., Ltd.
13F, No. 363, Fu Shing North Road, Taipei 10543, Taiwan
Tel: +886-2-8175-9600, Fax: +886 2-8175-9670

Renesas Electronics Singapore Pte. Ltd.
80 Bendemeer Road, Unit #06-02 Hyflux Innovation Centre, Singapore 339949
Tel: +65-6213-0200, Fax: +65-6213-0300

Renesas Electronics Malaysia Sdn.Bhd.
Unit 1207, Block B, Menara Amcorp, Amcorp Trade Centre, No. 18, Jln Persiaran Barat, 46050 Petaling Jaya, Selangor Darul Ehsan, Malaysia
Tel: +60-3-7955-9390, Fax: +60-3-7955-9510

Renesas Electronics India Pvt. Ltd.
No.777C, 100 Feet Road, HAL II Stage, Indiranagar, Bangalore, India
Tel: +91-80-67208700, Fax: +91-80-67208777

Renesas Electronics Korea Co., Ltd.
12F., 234 Teheran-ro, Gangnam-Gu, Seoul, 135-080, Korea
Tel: +82-2-558-3737, Fax: +82-2-558-5141

© 2017 Renesas Electronics Corporation. All rights reserved.

Colophon 6.0

Mouser Electronics

Authorized Distributor

Click to View Pricing, Inventory, Delivery & Lifecycle Information:

Renesas Electronics:

R5F524UEADFP#30 R5F524UEADFB#30 R5F524UBADFP#30 R5F524UCADFP#30 R5F524UCADFB#30 R5F524UBADFB#30 R5F524UBADFP#50 R5F524UCADFP#50 R5F524UEADFP#50

Общество с ограниченной ответственностью «МосЧип» ИНН 7719860671 / КПП 771901001
Адрес: 105318, г.Москва, ул.Щербаковская д.3, офис 1107

Данный компонент на территории Российской Федерации

Вы можете приобрести в компании MosChip.

Для оперативного оформления запроса Вам необходимо перейти по данной ссылке:

http://moschip.ru/get-element

Вы можете разместить у нас заказ для любого Вашего проекта, будь то серийное производство или разработка единичного прибора.

В нашем ассортименте представлены ведущие мировые производители активных и пассивных электронных компонентов.

Нашей специализацией является поставка электронной компонентной базы двойного назначения, продукции таких производителей как XILINX, Intel (ex.ALTERA), Vicor, Microchip, Texas Instruments, Analog Devices, Mini-Circuits, Amphenol, Glenair.

Сотрудничество с глобальными дистрибьюторами электронных компонентов, предоставляет возможность заказывать и получать с международных складов практически любой перечень компонентов в оптимальные для Вас сроки.

На всех этапах разработки и производства наши партнеры могут получить квалифицированную поддержку опытных инженеров.

Система менеджмента качества компании отвечает требованиям в соответствии с ГОСТ Р ИСО 9001, ГОСТ РВ 0015-002 и ЭС РД 009

Офис по работе с юридическими лицами:

105318, г.Москва, ул.Щербаковская д.3, офис 1107, 1118, ДЦ «Щербаковский»

Телефон: +7 495 668-12-70 (многоканальный)

Факс: +7 495 668-12-70 (доб.304)

E-mail: info@moschip.ru

Skype отдела продаж:
moschip.ru
moschip.ru_4
moschip.ru_6
moschip.ru_9