PARA LIGHT

PL- IRM0101-1 RECEIVER MODULE

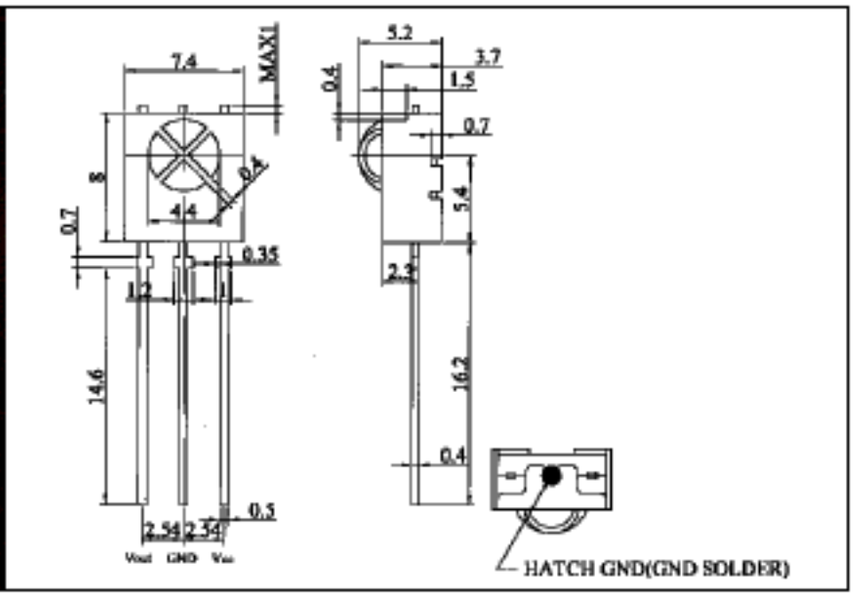

◆ABSOLUTE MAXIMUN RATING:(Ta=25°C)

PARAMETER	Test Conditions	Symbol	Value	Unit
Supply Voltage	-	Vcc	3~5	V
Output Voltage	-	Vout	3~5	V
Output Current	-	Io	2.5	mA
Junction Temperature	-	Ti	100	°C
Storage Temperature Range	-	Tstg	-25℃ to 85℃	°C
Operating Temperature Range	-	Totr	-25℃ to 85℃	°C
Power Consumption	(Tamb ≦ 85°C)	Ptot	50	mw
Soldering Temperature	t ≦10s,1mm from case	Tsd	260	°C

◆ELECTRO-OPTICAL CHARACTERISTICS:(Ta=25°C)

Parameter	Symbol	Min	Typ	Max	Unit	Conditions
Supply Current	Icc	-	0.8	1.5	mA	Iin=0 uA
Max. Input Current	Iin	0.3	-	0.8	mA	Vin=0 V
Max. Voltage Gain	Av	80	95	110	dB	Fin=37.9 KHz Vin=30 uVp-p AGC off
Frequency Range	f	-	37.9	-	KHz	-
Output Pulse Width	tPW1	500	600	700	us	Fin=37.9 KHz burst wave Vin=500 uVp-p
	tPW2	500	600	700	us	Fin=37.9 KHz burst wave Vin=50 uVp-p
Low Level Output Voltage	Vol	-	0.2	0.4	V	-
Hight Level Output Voltage	Voh	2.8	3.0	-	V	-
Arrival Distance	d	-	16	-	m	L-514EIR1C If=300 mA

1.All dimension are in millimeters(inches).

2.Tolerance is ±0.25mm(0.01")unless otherwise specified.

PL- IRM0101- 3 RECEIVER MODULE

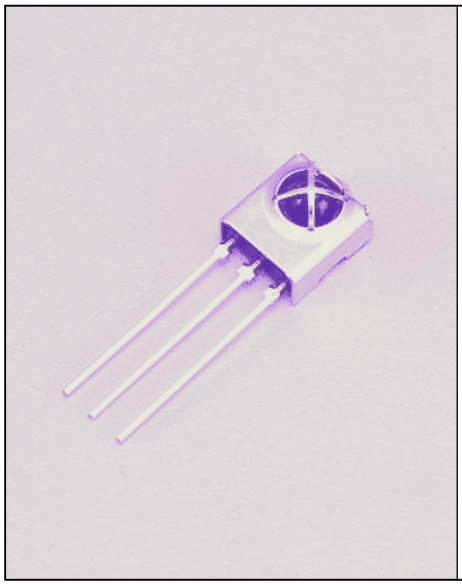

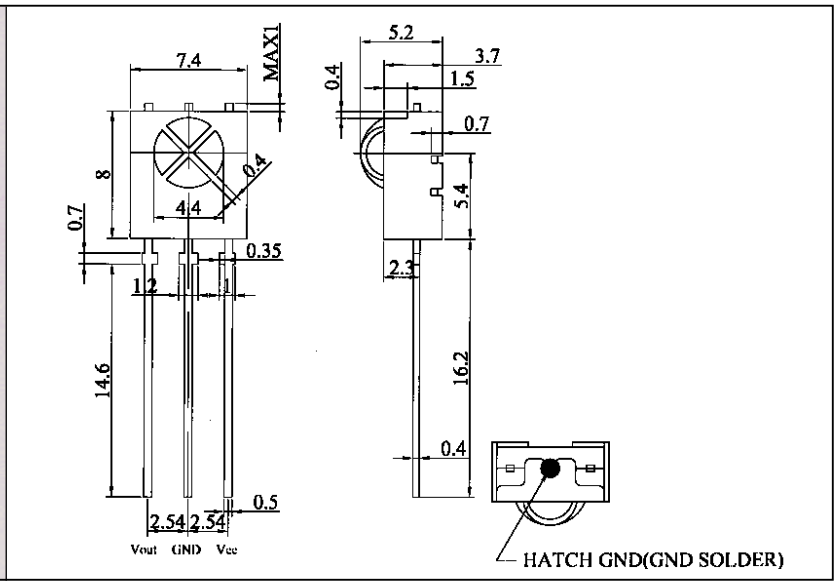

◆ABSOLUTE MAXIMUN RATING:(Ta=25ºC)

PARAMETER	Test Conditions	Symbol	Value	Unit
Supply Voltage	-	Vcc	4.5~5.5	V
Output Voltage	-	Vout	4.5~5.5	V
Output Current	-	lo	5	mA
Junction Temperature	-	Ti	100	ºC
Storage Temperature Range	-	Tstg	-25ºC to 85ºC	ºC
Operating Temperature Range	-	Totr	-25ºC to 85ºC	ºC
Power Consumption	-	Ptot	50	mw
Soldering Temperature	t ≦10s,1mm from case	Tsd	260	ºC

◆ELECTRO-OPTICAL CHARACTERISTICS:(Ta=25ºC)

Parameter	Symbol	Min	Typ	Max	Unit	Conditions
Supply Current	lcc	0.9	1.2	1.5	mA	Iin=0 uA
Max. Input Current	lin	-	1.0	-	mA	Vin=0 V
Max. Voltage Gain	Av	50	52	53	dB	Fin=37.9 KHz Vin=30 uVp-p AGC off
Frequency Range	f	-	38.0	-	KHz	-
Output Pulse Width	tPW1	500	600	700	us	Fin=37.9 KHz burst wave Vin=500 uVp-p
	tPW2	500	600	700	us	Fin=37.9 KHz burst wave Vin=50 uVp-p
Low Level Output Voltage	Vol	-	0.20	0.25	V	-
Hight Level Output Voltage	Voh	4.5		5.5	V	-
Arrival Distance	d	-	35	-	m	L-514EIR1C If=300 mA

1.All dimension are in millimeters(inches).

2.Tolerance is ±0.25mm(0.01")unless otherwise specified.

PARA LIGHT

PL - IRM0204-A538 RECEIVER MODULE

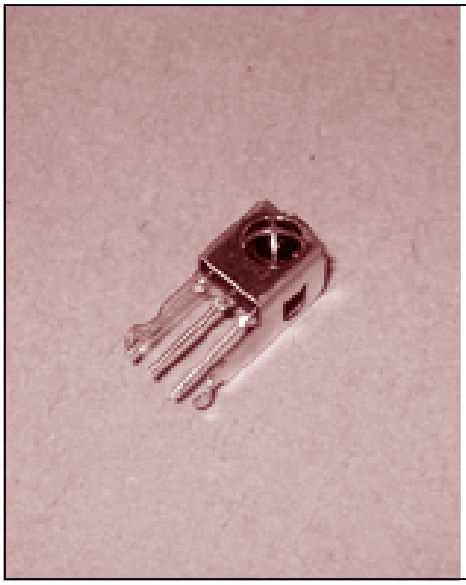

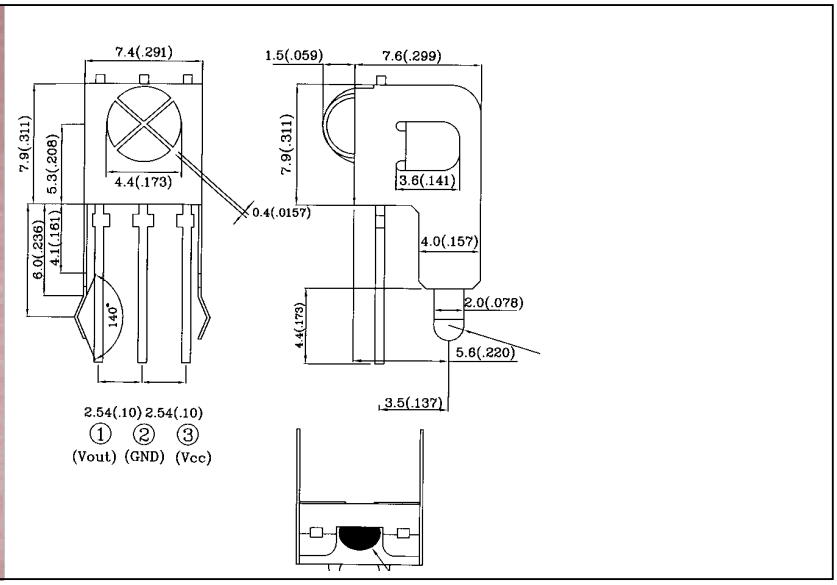

◆ABSOLUTE MAXIMUN RATING:(Ta=25ºC)

PARAMETER	Test Conditions	Symbol	Value	Unit
Supply Voltage	-	Vcc	4.5~5.5	V
Output Voltage	-	Vout	4.5~5.5	V
Output Current	-	Io	5	mA
Junction Temperature	-	Ti	100	ºC
Storage Temperature Range	-	Tstg	-25ºC to 85ºC	ºC
Operating Temperature Range	-	Totr	-25ºC to 85ºC	ºC
Power Consumption	-	Ptot	50	mw
Soldering Temperature	t ≦10s,1mm from case	Tsd	260	ºC

◆ELECTRO-OPTICAL CHARACTERISTICS:(Ta=25ºC)

Parameter	Symbol	Min	Typ	Max	Unit	Conditions
Supply Current	Icc	0.9	1.2	1.5	mA	Iin=0 uA
Max. Input Current	Iin(max)	-	1	-	mA	Vin ≧0V ; Vs=5V Tamb=25ºC
Max. Voltage Gain	Av	50	52	53	dB	Fin=37.9 KHz Vin=30 uVp-p AGC off
Frequency Range	f	-	38.0	-	KHz	-
Output Pulse Width	tPW1	500	600	700	us	Fin=37.9 KHz burst wave Vin=500 uVp-p
	tPW2	500	600	700	us	Fin=37.9 KHz burst wave Vin=50 uVp-p
Low Level Output Voltage	Vol	-	0.20	0.25	V	-
Hight Level Output Voltage	Voh	4.5		5.5	V	-
Arrival Distance	d	-	35	-	m	L-514EIR1C IF=300 mA

1.All dimension are in millimeters(inches).

2.Tolerance is ±0.25mm(0.01")unless otherwise specified.

PARA LIGHT

PL - IRM0206-A538 RECEIVER MODULE

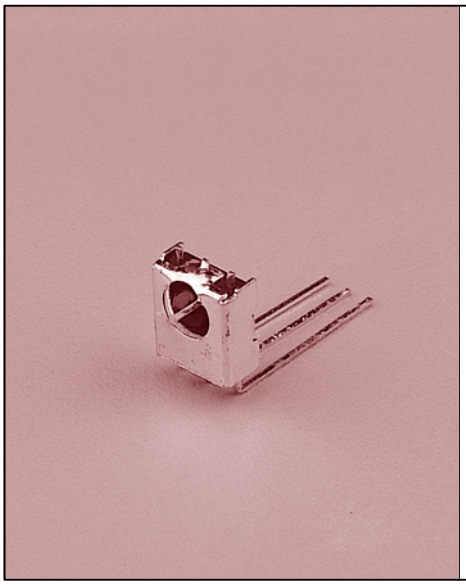

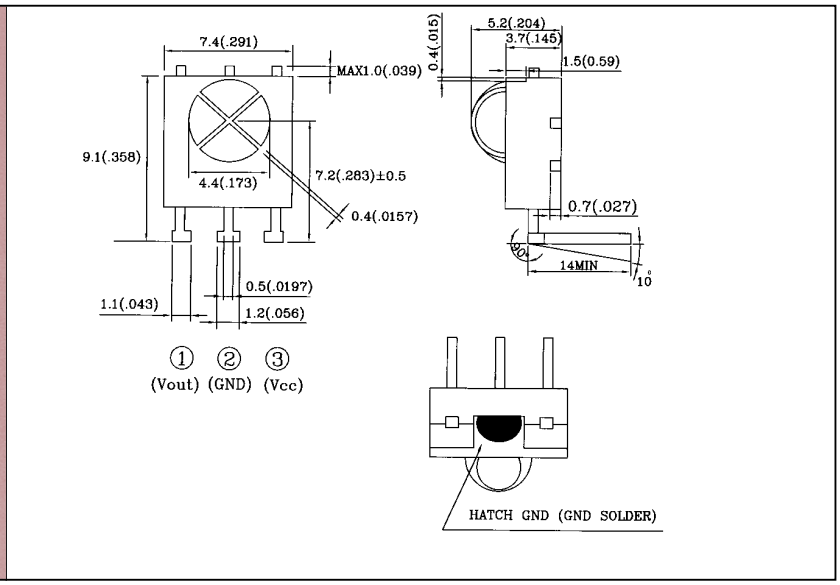

◆ABSOLUTE MAXIMUN RATING:(Ta=25ºC)

PARAMETER	Test Conditions	Symbol	Value	Unit
Supply Voltage	-	Vcc	4.5~5.5	V
Output Voltage	-	Vout	4.5~5.5	V
Output Current	-	Io	5	mA
Junction Temperature	-	Ti	100	ºC
Storage Temperature Range	-	Tstg	-25ºC to 85ºC	ºC
Operating Temperature Range	-	Totr	-25ºC to 85ºC	ºC
Power Consumption	-	Ptot	50	mw
Soldering Temperature	t ≦10s,1mm from case	Tsd	260	ºC

◆ELECTRO-OPTICAL CHARACTERISTICS:(Ta=25ºC)

Parameter	Symbol	Min	Typ	Max	Unit	Conditions
Supply Current	Icc	0.9	1.2	1.5	mA	Iin=0 uA
Max. Input Current	Iin(max)	-	1	-	mA	Vin ≧0V ; Vs=5V Tamb=25℃
Max. Voltage Gain	Av	50	52	53	dB	Fin=37.9 KHz Vin=30 uVp-p AGC off
Frequency Range	f	-	38.0	-	KHz	-
Output Pulse Width	tPW1	500	600	700	us	Fin=37.9 KHz burst wave Vin=500 uVp-p
	tPW2	500	600	700	us	Fin=37.9 KHz burst wave Vin=50 uVp-p
Low Level Output Voltage	Vol	-	0.20	0.25	V	-
Hight Level Output Voltage	Voh	4.5		5.5	V	-
Arrival Distance	d	-	35	-	m	L-514EIR1C IF=300 mA

1.All dimension are in millimeters(inches).

2.Tolerance is ±0.25mm(0.01")unless otherwise specified.

PL - IRM0208-A538 RECEIVER MODULE

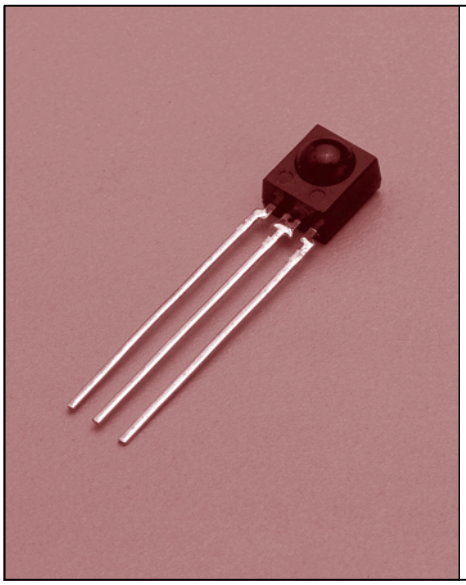

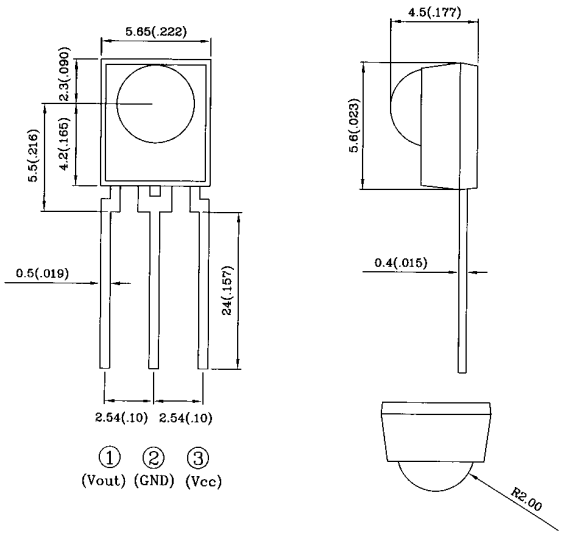

◆ABSOLUTE MAXIMUN RATING:(Ta=25ºC)

PARAMETER	Test Conditions	Symbol	Value	Unit
Supply Voltage	-	Vcc	4.5~5.5	V
Output Voltage	-	Vout	4.5~5.5	V
Output Current	-	Io	5	mA
Junction Temperature	-	Ti	100	ºC
Storage Temperature Range	-	Tstg	-25ºC to 85ºC	ºC
Operating Temperature Range	-	Totr	-25ºC to 85ºC	ºC
Power Consumption	-	Ptot	50	mw
Soldering Temperature	t ≦10s,1mm from case	Tsd	260	ºC

◆ELECTRO-OPTICAL CHARACTERISTICS:(Ta=25ºC)

Parameter	Symbol	Min	Typ	Max	Unit	Conditions
Supply Current	Icc	0.9	1.2	1.5	mA	Iin=0 uA
Max. Input Current	Iin(max)	-	1	-	mA	Vin ≧0V ; Vs=5V Tamb=25℃
Max. Voltage Gain	Av	50	52	53	dB	Fin=37.9 KHz Vin=30 uVp-p AGC off
Frequency Range	f	-	38.0	-	KHz	-
Output Pulse Width	tPW1	500	600	700	us	Fin=37.9 KHz burst wave Vin=500 uVp-p
	tPW2	500	600	700	us	Fin=37.9 KHz burst wave Vin=50 uVp-p
Low Level Output Voltage	Vol	-	0.20	0.25	V	-
Hight Level Output Voltage	Voh	4.5		5.5	V	-
Arrival Distance	d	-	35	-	m	L-514EIR1C IF=300 mA

1.All dimension are in millimeters(inches).

2.Tolerance is ±0.25mm(0.01")unless otherwise specified.

PARA LIGHT

L-31ROPT1XX 3.0mm PHOTOTRANSISTOR

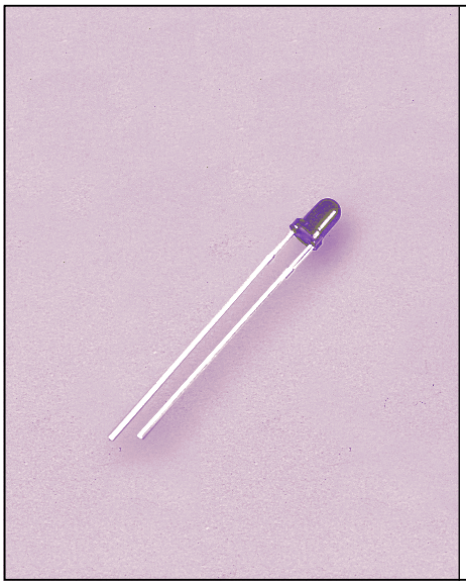

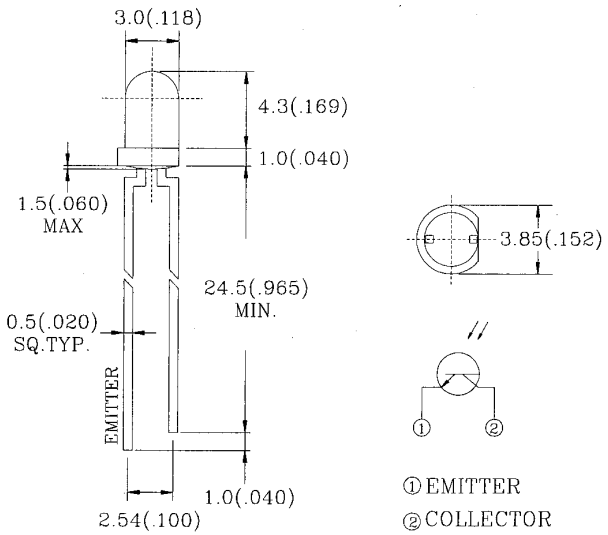

◆ABSOLUTE MAXIMUN RATING:(Ta=25ºC)

Part No.	P_D (mw)	$V_{(BR)R}$ (V)	Topr	Tstg
L-31ROPT1XX	10	5	-35ºC to 85ºC	-35ºC to 85ºC
PARAMETER	**Power Dissipation**	**Reverse break down voltage**	**Operating Temperature Range**	**Storage Temperature Range**
Lead Soldering Temperature {1.6mm(0.063 inch)From Body}250ºC±5ºC For 3 Seconds				

◆ELECTRO-OPTICAL CHARACTERISTICS:(Ta=25ºC)

Part No.	BV_{CEO} (V)			BV_{ECO} (V)			I_{CEO} (nA)			$V_{CE(s)}$ (V)			t_R/t_F (uS)			I_C (mA)			C_{CB} (pF)			λ (nm)		
	MIN	TYP	MAX	MIN	TYP	MAX	MIN	TYP	MAX	MIN	TYP	MAX	MIN	TYP	MAX	MIN	TYP	MAX	MIN	TYP	MAX	MIN	PEAK	MAX
L-31ROPT1C	30			5					100			0.4		15/15		0.9	1.8			6.4		400		1050
L-31ROPT1D1	30			5					100			0.4		15/15		0.8	1.6			6.4		900	940	
L-31ROPT1D2	30			5					100			0.4		15/15		0.8	1.6			6.4		800	870	
TEST CONDITION	I_C=100uA Ee=0mW/cm²			I_E=100uA Ee=0mW/cm²			V_E=20V Ee=0mW/cm²			I_C=2mA Ee=0.5mW/cm²			V_{CE}=5V I_C=1mA RL=1000Ω			V_{CE}=5V Ee=0.1mW/cm²			f=1MHZ V_{CB}=3V Ee=0mW/cm²					
PARAMETER	COLLECTOR-EMITTER BREAKDOWN VOLTAGE			EMITTER-COLLECTOR BREAKDOWN VOLTAGE			COLLECTOR DARK CURRENT			COLLECTOR-EMITTER SATURATION VOLTAGE			RISE/FALL TIME			ON STATE COLLECTOR CURRENT			COLLECTOR -BASE CAPACITANCE			SPECTRAL SENSITIVITY WAVELENGTH		

D1,D2=BLACK

1.All dimension are in millimeters (inches).

2.Tolerance is ± 0.25 mm (0.01") unless otherwise specified.

L-32XOPT1XX 3.0mm PHOTOTRANSISTOR

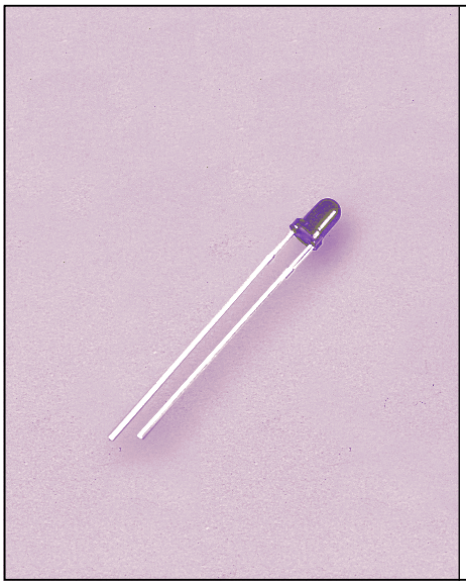

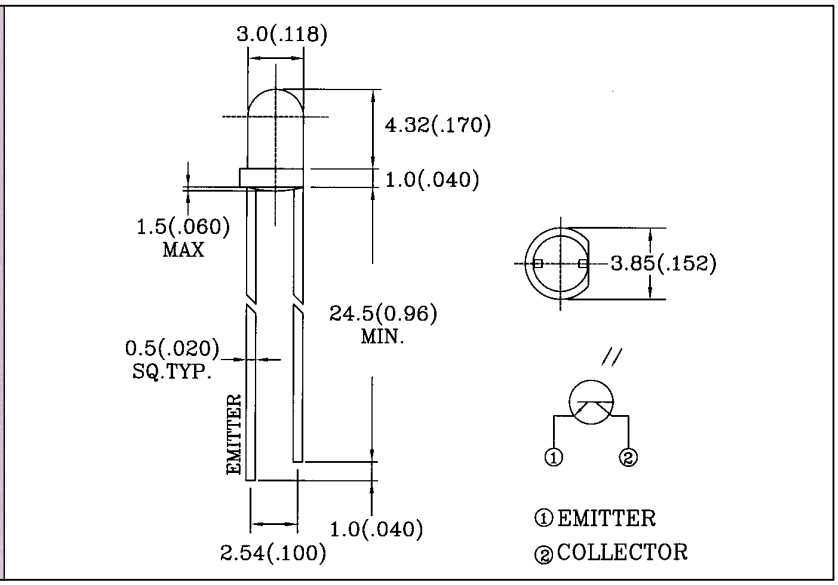

◆ABSOLUTE MAXIMUN RATING:(Ta=25ºC)

Part No.	P_D (mw)	$V_{(BR)R}$ (V)	Topr	Tstg
L-32XOPT1XX	10	5	-35ºC to 85ºC	-35ºC to 85ºC
PARAMETER	**Power Dissipation**	**Reverse Voltage**	**Operating Temperature Range**	**Storage Temperature Range**
Lead Soldering Temperature {1.6mm(0.063 inch)From Body}250ºC±5ºC For 3 Seconds				

◆ELECTRO-OPTICAL CHARACTERISTICS:(Ta=25ºC)

Part No.	BV_{CEO} (V)			BV_{ECO} (V)			I_{CEO} (nA)			V_{CE} (s)(V)			t_R/t_F (uS)			I_C (mA)			Δλ (nm)		
	MIN	TYP	MAX	MIN	TYP	MAX	MIN	TYP	MAX	MIN	TYP	MAX	MIN	TYP	MAX	MIN	TYP	MAX	MIN	TYP	MAX
L-32ROPT1D1	30			5					100			0.4		15/15		0.2	0.6		900	940	
L-32AOPT1D1	30			5					100			0.4		15/15		0.6	1.0		900	940	
TEST CONDITION	I_C=100uA Ee=0mW/cm²			I_E=100uA Ee=0mW/cm²			V_E=20V Ee=0mW/cm²			I_C=2mA Ee=0.5mW/cm²			V_{CE}=5V I_C=1mA RL=1000Ω			V_{CE}=5V Ee=0.1mW/cm²					
PARAMETER	COLLECTOR-EMITTER BREAKDOWN VOLTAGE			EMITTER-COLLECTOR BREAKDOWN VOLTAGE			COLLECTOR DARK CURRENT			COLLECTOR-EMITTER SATURATION VOLTAGE			RISE/FALL TIME			ON STATE COLLECTOR CURRENT			SPECTRAL SENSITIVITY WAVELENGTH		

D1,D2=BLACK

1.All dimension are in millimeters(inches).

2.Tolerance is ±0.25mm(0.01")unless otherwise specified.

L-51ROPT1XX 5.0mm PHOTOTRANSISTOR

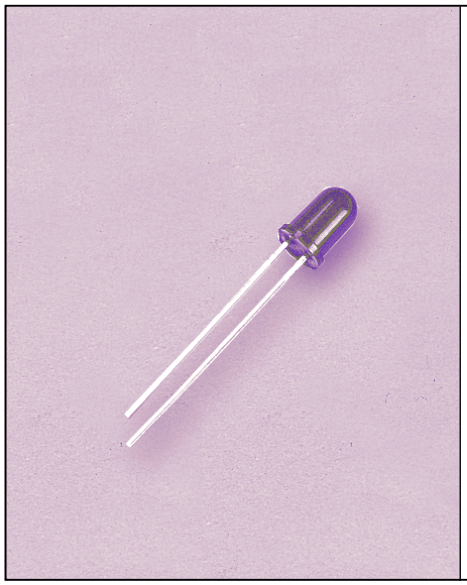

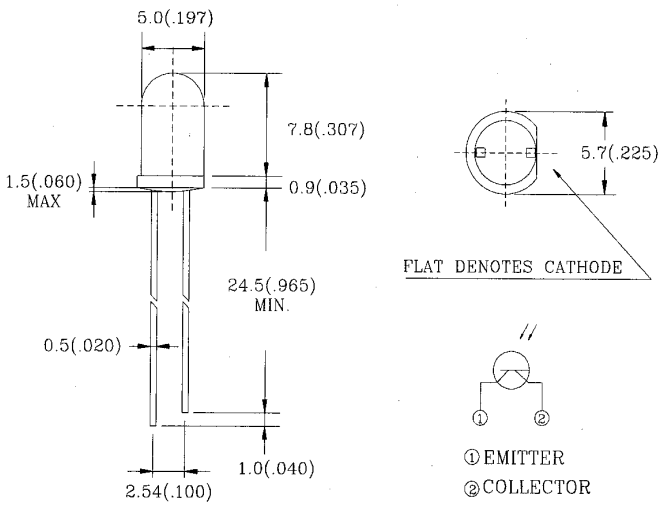

◆ABSOLUTE MAXIMUN RATING:(Ta=25ºC)

Part No.	P_D (mw)	$V_{(BR)R}$ (V)	Topr	Tstg
L-51ROPT1XX	10	5	-35ºC to 85ºC	-35ºC to 85ºC
PARAMETER	**Power Dissipation**	**Reverse break down voltage**	**Operating Temperature Range**	**Storage Temperature Range**
Lead Soldering Temperature {1.6mm(0.063 inch)From Body}250ºC±5ºC For 3 Seconds				

◆ELECTRO-OPTICAL CHARACTERISTICS:(Ta=25ºC)

Part No.	BV_{CEO} (V)			BV_{ECO} (V)			I_{CEO} (nA)			$V_{CE(s)}$ (V)			t_R/t_F (uS)			I_C (mA)			C_{CB} (pF)			λ (nm)		
	MIN	TYP	MAX	MIN	TYP	MAX	MIN	TYP	MAX	MIN	TYP	MAX	MIN	TYP	MAX	MIN	TYP	MAX	MIN	TYP	MAX	MIN	PEAK	MAX
L-51ROPT1C	30			5					100			0.4		15/15		1.8	2.4			6.4		400		1050
L-51ROPT1D1	30			5					100			0.4		15/15		1.7	2.2			6.4		900	940	
L-51ROPT1D2	30			5					100			0.4		15/15		1.7	2.2			6.4		800	870	
TEST CONDITION	I_C=100uA Ee=0mW/cm²			I_E=100uA Ee=0mW/cm²			V_E=20V Ee=0mW/cm²			I_C=2mA Ee=0.5mW/cm²			V_{CE}=5V I_C=1mA RL=1000Ω			V_{CE}=5V Ee=0.1mW/cm²			f=1MHZ V_{CB}=3V Ee=0mW/cm²					
PARAMETER	COLLECTOR-EMITTER BREAKDOWN VOLTAGE			EMITTER-COLLECTOR BREAKDOWN VOLTAGE			COLLECTOR DARK CURRENT			COLLECTOR-EMITTER SATURATION VOLTAGE			RISE/FALL TIME			ON STATE COLLECTOR CURRENT			COLLECTOR -BASE CAPACITANCE			SPECTRAL SENSITIVITY WAVELENGTH		

D1,D2=BLACK

1.All dimension are in millimeters (inches).

2.Tolerance is ± 0.25 mm (0.01") unless otherwise specified.

L-SB1R9PD1XX PHOTODIODE

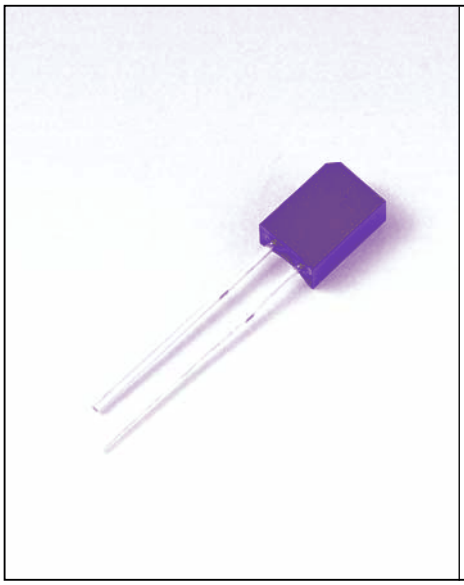

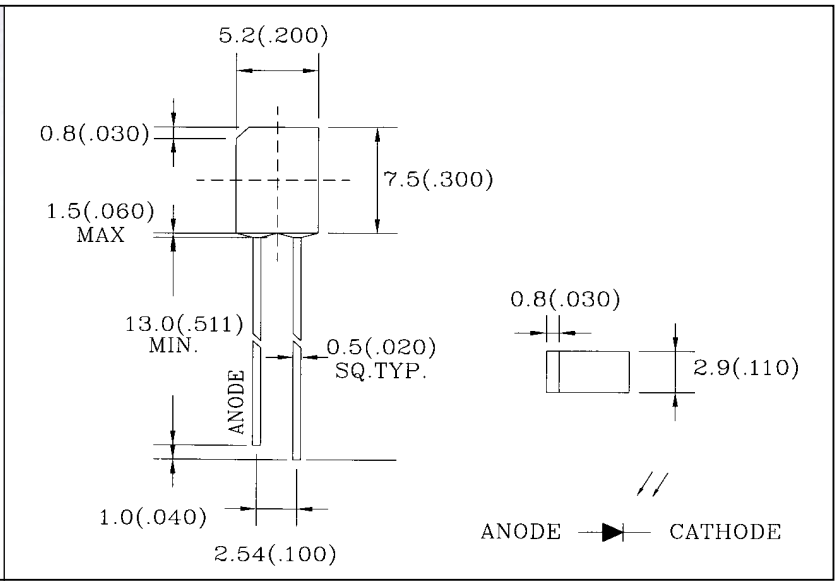

◆ABSOLUTE MAXIMUN RATING:(Ta=25ºC)

Part No.	P_D (mw)	$V_{(BR)R}$ (V)	Topr	Tstg
L-SB1R9PD1XX	0.1	30	-35ºC to 85ºC	-35ºC to 85ºC
PARAMETER	**Power Dissipation**	**Reverse Voltage**	**Operating Temperature Range**	**Storage Temperature Range**
Lead Soldering Temperature {1.6mm(0.063 inch)From Body}250ºC±5ºC For 3 Seconds				

◆ELECTRO-OPTICAL CHARACTERISTICS:(Ta=25ºC)

Part No.	I_D (nA)			$V_{(BR)R}$ (V)			V_{OC} (mV)			I_L (uA)			t_{ON}/t_{OFF} (nS)			C_T (pF)			λ (nm)		
	MIN	TYP	MAX	MIN	TYP	MAX	MIN	TYP	MAX	MIN	TYP	MAX	MIN	TYP	MAX	MIN	TYP	MAX	MIN	PEAK	MAX
L-SB1R9PD1C		5	30	33	170			390		30	40			45/45			18		400		1050
L-SB1R9PD1D1		5	30	33	170			390		30	40			45/45			18		900	940	
L-SB1R9PD1D2		5	30	33	170			390		30	40			45/45			18		800	870	
TEST CONDITION	V_R=10V Ee=0mW/cm²			I_R=100uA Ee=0mW/cm²			λ=940nm Ee=0.5mW/cm²			V_R=5V Ee=0.1mW/cm²			V_R=10V RL=100Ω			f=1MHZ V_R=5V Ee=0mW/cm²					
PARAMETER	REVERSE DARK CURRENT			REVERSE BREAKDOWN VOLTAGE			OPEN CIRCUIT VOLTAGE			LIGHTE CURRENT			TURN-ON TURN-OFF TIME			TOTAL CAPACITANCE			SPECTRAL SENSITIVITY WAVELENGTH		

D1,D2=BLACK

1.All dimension are in millimeters (inches).

2.Tolerance is ± 0.25 mm (0.01") unless otherwise specified.

L-SC1R9PD1XX PHOTODIODE

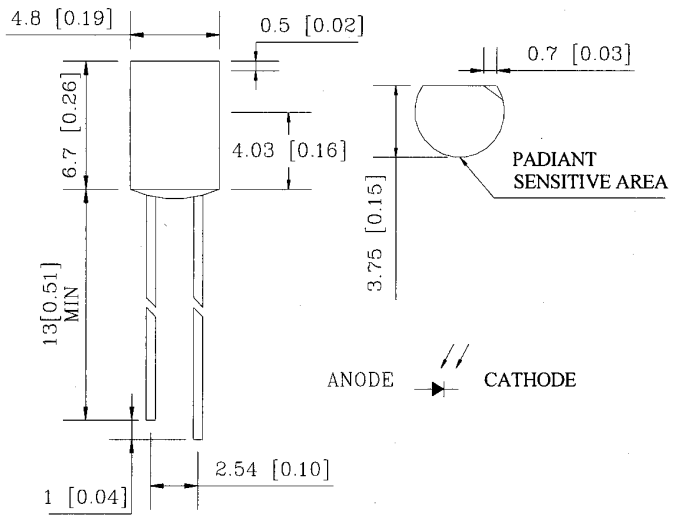

◆ABSOLUTE MAXIMUN RATING:(Ta=25ºC)

Part No.	P_D (mw)	$V_{(BR)R}$ (V)	Topr	Tstg
L-SC1R9PD1XX	0.1	30	-35ºC to 85ºC	-35ºC to 85ºC
PARAMETER	**Power Dissipation**	**Reverse Voltage**	**Operating Temperature Range**	**Storage Temperature Range**
Lead Soldering Temperature {1.6mm(0.063 inch)From Body}250ºC±5ºC For 3 Seconds				

◆ELECTRO-OPTICAL CHARACTERISTICS:(Ta=25ºC)

Part No.	I_D (nA)			$V_{(BR)R}$ (V)			V_{OC} (mV)			I_L (uA)			t_{ON}/t_{OFF} (nS)			C_T (pF)			λ (nm)		
	MIN	TYP	MAX	MIN	TYP	MAX	MIN	TYP	MAX	MIN	TYP	MAX	MIN	TYP	MAX	MIN	TYP	MAX	MIN	PEAK	MAX
L-SC1R9PD1C		5	30	33	170			390		30	40			45/45			18		400		1050
L-SC1R9PD1D1		5	30	33	170			390		30	40			45/45			18		900	940	
L-SC1R9PD1D2		5	30	33	170			390		30	40			45/45			18		800	870	
TEST CONDITION	V_R=10V Ee=0mW/cm²			I_R=100uA Ee=0mW/cm²			λ=940nm Ee=0.5mW/cm²			V_R=5V Ee=0.1mW/cm²			V_R=10V RL=100Ω			f=1MHZ V_R=5V Ee=0mW/cm²					
PARAMETER	REVERSE DARK CURRENT			REVERSE BREAKDOWN VOLTAGE			OPEN CIRCUIT VOLTAGE			LIGHT CURRENT			TURN-ON TURN-OFF TIME			TOTAL CAPACITANCE			SPECTRAL SENSITIVITY WAVELENGTH		

D1,D2=BLACK

1.All dimension are in millimeters (inches).

2.Tolerance is ± 0.25 mm (0.01") unless otherwise specified.

L-31XXIR1XX 3.0mm INFRARED EMITTING DIODE

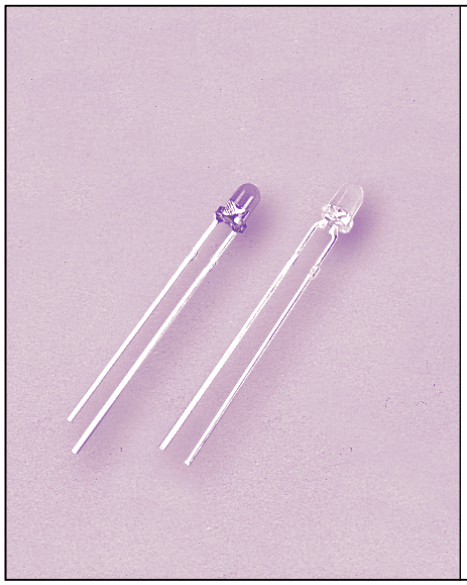

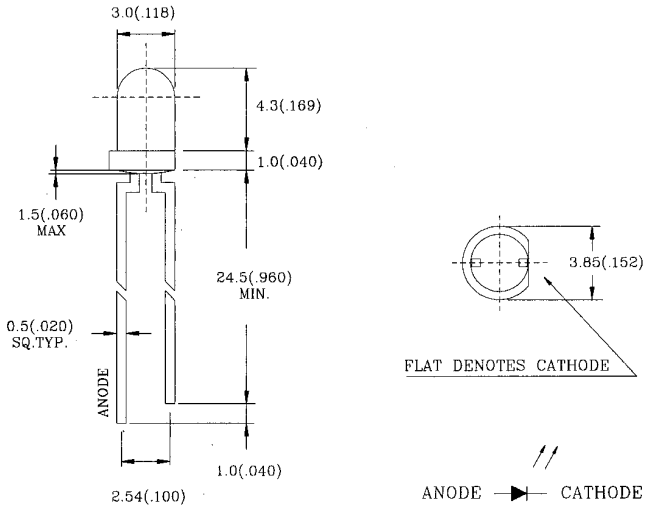

◆ABSOLUTE MAXIMUN RATING:(Ta=25ºC)

Part No.	P_D (mw)	V_R (V)	Topr	Tstg
L-31XXIR1XX	100	5	-35ºC to 85ºC	-35ºC to 85ºC
PARAMETER	**Power Dissipation**	**Reverse Voltage**	**Operating Temperature Range**	**Storage Temperature Range**
Lead Soldering Temperature {1.6mm(0.063 inch)From Body}250ºC±5ºC For 3 Seconds				

◆ELECTRO-OPTICAL CHARACTERISTICS:(Ta=25ºC)

Part No.	V_F (V)			I_R (μA)			λp (nm)			2θ1/2 (dge)			Ie (mw/sr)		
	MIN	TYP	MAX	MIN	TYP	MAX	MIN	TYP	MAX	MIN	TYP	MAX	MIN	TYP	MAX
L-314EIR1C		1.2 1.4	1.6			10		940			20		7	14	
L-315EIR1C		1.2 1.4	1.6			10		940			25		6	12	
L-316EIR1C		1.2 1.4	1.6			10		940			30		6	12	
L-314EIR1BC		1.2 1.4	1.6			10		940			20		5	10	
L-315EIR1BC		1.2 1.4	1.6			10		940			25		6	12	
L-316EIR1BC		1.2 1.4	1.6			10		940			30		6	12	
L-318EIR1BC		1.2 1.4	1.6			10		940			40		6	10	
TEST CONDITION	I_F=20mA I_F=100mA			V_R=5V			I_F=20mA			I_F=20mA			I_F=20mA		

BC=BLUE CLEAR

1.All dimension are in millimeters (inches).

2.Tolerance is ± 0.25 mm (0.01") unless otherwise specified.

PARA LIGHT

L-32XXIRXX 3.0mm INFRARED EMITTING DIODE

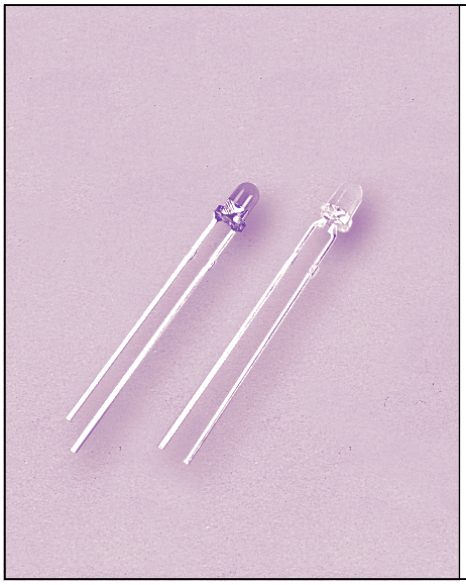

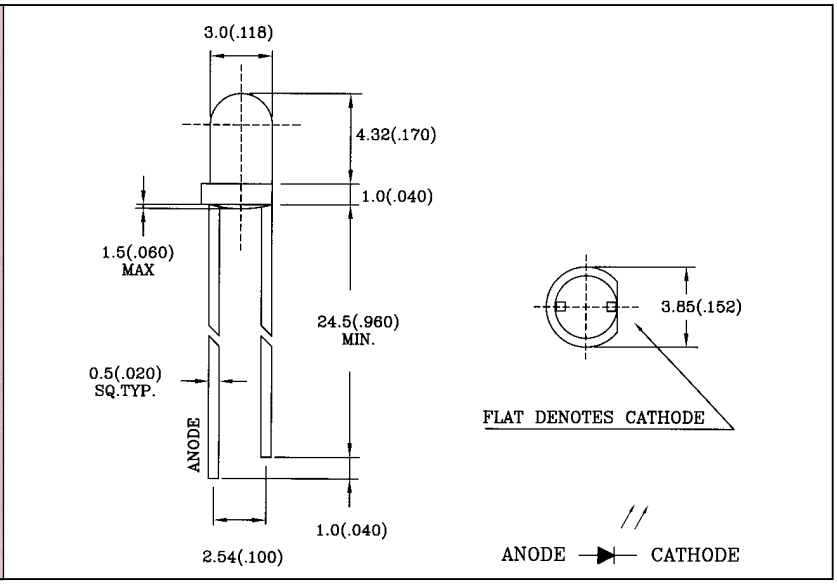

◆ABSOLUTE MAXIMUN RATING:(Ta=25ºC)

Part No.	P_D (mw)	V_R (V)	Topr	Tstg
L-32XXIRXX	100	5	-35ºC to 85ºC	-35ºC to 85ºC
PARAMETER	**Power Dissipation**	**Reverse Voltage**	**Operating Temperature Range**	**Storage Temperature Range**
Lead Soldering Temperature {1.6mm(0.063 inch)From Body}250ºC ±5ºC For 3 Seconds				

◆ELECTRO-OPTICAL CHARACTERISTICS:(Ta=25ºC)

Part No.	V_F (V)			I_R (μA)			λp (nm)			2θ1/2 (dge)			Ie (mw/sr)		
	MIN	TYP	MAX	MIN	TYP	MAX	MIN	TYP	MAX	MIN	TYP	MAX	MIN	TYP	MAX
L-327EIR1C	- -	1.2 1.4	1.6	-	-	10	-	940	-		35		7.5	15	-
L-327EIR1BC	- -	1.2 1.4	1.6	-	-	10	-	940	-		35		7.5	15	-
L-32AEIR1C	- -	1.2 1.4	1.6	-	-	10	-	940	-		50		6	10	-
TEST CONDITION	I_F=20mA I_F=100mA			V_R=5V			I_F=20mA			I_F=20mA			I_F=20mA		

BC=BLUE CLEAR

1.All dimension are in millimeters (inches).

2.Tolerance is ± 0.25 mm (0.01") unless otherwise specified.

L-51XXIR1C 5.0mm INFRARED EMITTING DIODE

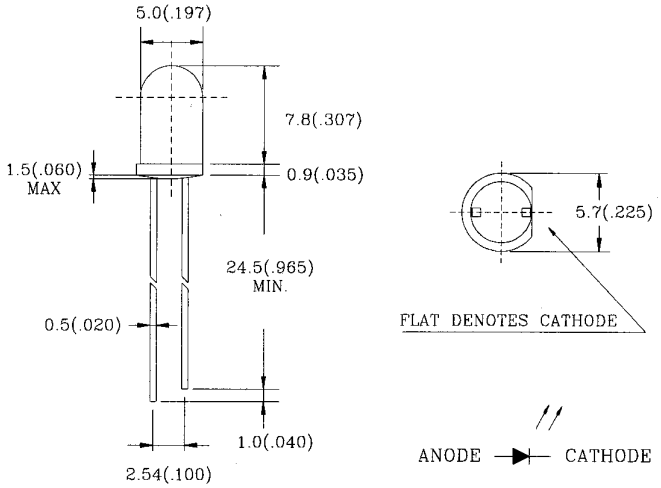

◆ABSOLUTE MAXIMUN RATING:(Ta=25ºC)

Part No.	P_D (mw)	V_R (V)	Topr	Tstg
L-51XXIR1C	100	5	-35ºC to 85ºC	-35ºC to 85ºC
PARAMETER	**Power Dissipation**	**Reverse Voltage**	**Operating Temperature Range**	**Storage Temperature Range**
Lead Soldering Temperature {1.6mm(0.063 inch)From Body}250ºC±5ºC For 3 Seconds				

◆ELECTRO-OPTICAL CHARACTERISTICS:(Ta=25ºC)

Part No.	V_F (V)			I_R (μA)			λp (nm)			2θ1/2 (dge)			Ie (mw/sr)		
	MIN	TYP	MAX	MIN	TYP	MAX	MIN	TYP	MAX	MIN	TYP	MAX	MIN	TYP	MAX
L-514EIR1C		1.2 1.4	1.6			10		940			20		17	30	
L-515EIR1C		1.2 1.4	1.6			10		940			25		14	25	
L-516EIR1C		1.2 1.4	1.6			10		940			30		12	23	
L-517EIR1C		1.2 1.4	1.6			10		940			35		10	20	
L-518EIR1C		1.2 1.4	1.6			10		940			40		8	18	
L-51AEIR1C		1.2 1.4	1.6			10		940			50		6	12	
L-514CIR1C		1.3 1.6	1.8			10		940			20		13	25	
TEST CONDITION	I_F=20mA I_F=100mA			V_R=5V			I_F=20mA			I_F=20mA			I_F=20mA		

1.All dimension are in millimeters (inches).
2.Tolerance is ± 0.25 mm (0.01") unless otherwise specified.

L-51XXIR1BC 5.0mm INFRARED EMITTING DIODE

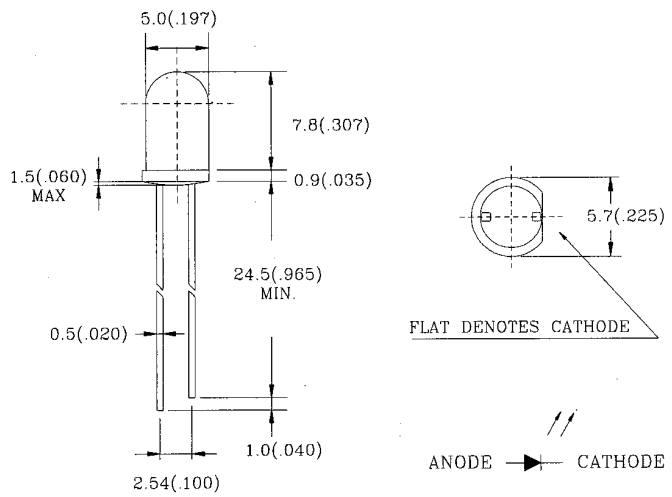

◆ABSOLUTE MAXIMUN RATING:(Ta=25ºC)

Part No.	P_D (mw)	V_R (V)	Topr	Tstg
L-51XXIR1BC	100	5	-35ºC to 85ºC	-35ºC to 85ºC
PARAMETER	**Power Dissipation**	**Reverse Voltage**	**Operating Temperature Range**	**Storage Temperature Range**
Lead Soldering Temperature {1.6mm(0.063 inch)From Body}250ºC±5ºC For 3 Seconds				

◆ELECTRO-OPTICAL CHARACTERISTICS:(Ta=25ºC)

Part No.	V_F (V)			I_R (μA)			λp (nm)			2θ1/2 (dge)			Ie (mw/sr)		
	MIN	TYP	MAX	MIN	TYP	MAX	MIN	TYP	MAX	MIN	TYP	MAX	MIN	TYP	MAX
L-514EIR1BC		1.2 1.4	16			10		940			20		17	30	
L-515EIR1BC		1.2 1.4	1.6			10		940			25		14	25	
L-516EIR1BC		1.2 1.4	1.6			10		940			30		12	23	
L-517EIR1BC		1.2 1.4	1.6			10		940			35		10	20	
L-518EIR1BC		1.2 1.4	1.6			10		940			40		8	18	
L-51AEIR1BC		1.2 1.4	1.6			10		940			50		6	12	
L-514CIR1BC		1.3 1.6	1.8			10		940			20		13	25	
TEST CONDITION	I_F=20mA I_F=100mA			V_R=5V			I_F=20mA			I_F=20mA			I_F=20mA		

BC=BLUE CLEAR

1.All dimension are in millimeters (inches).

2.Tolerance is ± 0.25 mm (0.01") unless otherwise specified.

Общество с ограниченной ответственностью «МосЧип» ИНН 7719860671 / КПП 771901001
Адрес: 105318, г.Москва, ул.Щербаковская д.3, офис 1107

Данный компонент на территории Российской Федерации

Вы можете приобрести в компании MosChip.

Для оперативного оформления запроса Вам необходимо перейти по данной ссылке:

http://moschip.ru/get-element

Вы можете разместить у нас заказ для любого Вашего проекта, будь то серийное производство или разработка единичного прибора.

В нашем ассортименте представлены ведущие мировые производители активных и пассивных электронных компонентов.

Нашей специализацией является поставка электронной компонентной базы двойного назначения, продукции таких производителей как XILINX, Intel (ex.ALTERA), Vicor, Microchip, Texas Instruments, Analog Devices, Mini-Circuits, Amphenol, Glenair.

Сотрудничество с глобальными дистрибьюторами электронных компонентов, предоставляет возможность заказывать и получать с международных складов практически любой перечень компонентов в оптимальные для Вас сроки.

На всех этапах разработки и производства наши партнеры могут получить квалифицированную поддержку опытных инженеров.

Система менеджмента качества компании отвечает требованиям в соответствии с ГОСТ Р ИСО 9001, ГОСТ РВ 0015-002 и ЭС РД 009

Офис по работе с юридическими лицами:

105318, г.Москва, ул.Щербаковская д.3, офис 1107, 1118, ДЦ «Щербаковский»

Телефон: +7 495 668-12-70 (многоканальный)

Факс: +7 495 668-12-70 (доб.304)

E-mail: info@moschip.ru

Skype отдела продаж:
moschip.ru
moschip.ru_4
moschip.ru_6
moschip.ru_9