PART NUMBER	REV	FIRST USED	TERMINATOR	FEED TYPE	DESCRIPTION
1528520 – 1	C	–	LEADMAKER	MECH POST FEED	CUTS CARRIER
1528520 – 2	C	–	BENCH	MECH PRE FEED	CUTS CARRIER
1528520 – 6	C	–	LEADMAKER	MECH POST FEED	CONTINUOUS CARRIER
7 – 1528520 – 1	C	–	LEADMAKER	MECH POST FEED	– 1 AND SPARE PARTS
7 – 1528520 – 2	C	–	BENCH	MECH PRE FEED	– 2 AND SPARE PARTS
7 – 1528520 – 6	C	–	LEADMAKER	MECH POST FEED	– 6 AND SPARE PARTS
7 – 1528520 – 7	A	–	–	–	SPARE PARTS KIT

DWG NO 1528520

DIMENSIONING AND TOLERANCING PER ASME Y14.5M (ISO STANDARDS) THIS DRAWING IS A CONTROLLED DOCUMENT.

CRIMP DATA FCI TERMINAL FCI CRIMP SPECS (4)

TERMINAL NAME: 2.8MM APEX TERMINAL FEMALE

CRIMP	SIZE	TYPE	RANGE
WIRE	2.36 [.093 IN]	F	1.50mm² – 2.50mm²
INSUL	3.05 [.120 IN]	0	2.41–2.77 [.095–.109 IN]

WIRE STRIP LENGTH 4.80–5.60 [.189–.220 IN]

APPL INSTRUCTION 408–8322 & 408–8490

TERMINAL APPL SPEC FCI TEST DOC. NONE –

FEED 15.20 [.598 IN]

TERMINALS APPLIED

AMP TERM PN	MFR TERM PN	–	–	–
1572825–1	5400 1400	–	–	–
–	–	–	–	–
–	–	–	–	–
–	–	–	–	–
–	–	–	–	–
–	–	–	–	–
–	–	–	–	–

WIRE SIZE mm² AWG	CRIMP HEIGHT *	REF SETTING
2.50mm²	1.90 ±0.05 [.075 ±.002 IN]	A 6
1.50mm²	1.50 ±0.05 [.059 ±.002 IN]	D 4
–	–	–
–	–	–
–	–	–
–	–	–
–	–	–
–	–	–
–	–	–
–	–	–
–	–	–
–	–	–
–	–	–
–	–	–
–	–	–

SET UP GAGE	LAYOUT
458637–3	L1528519

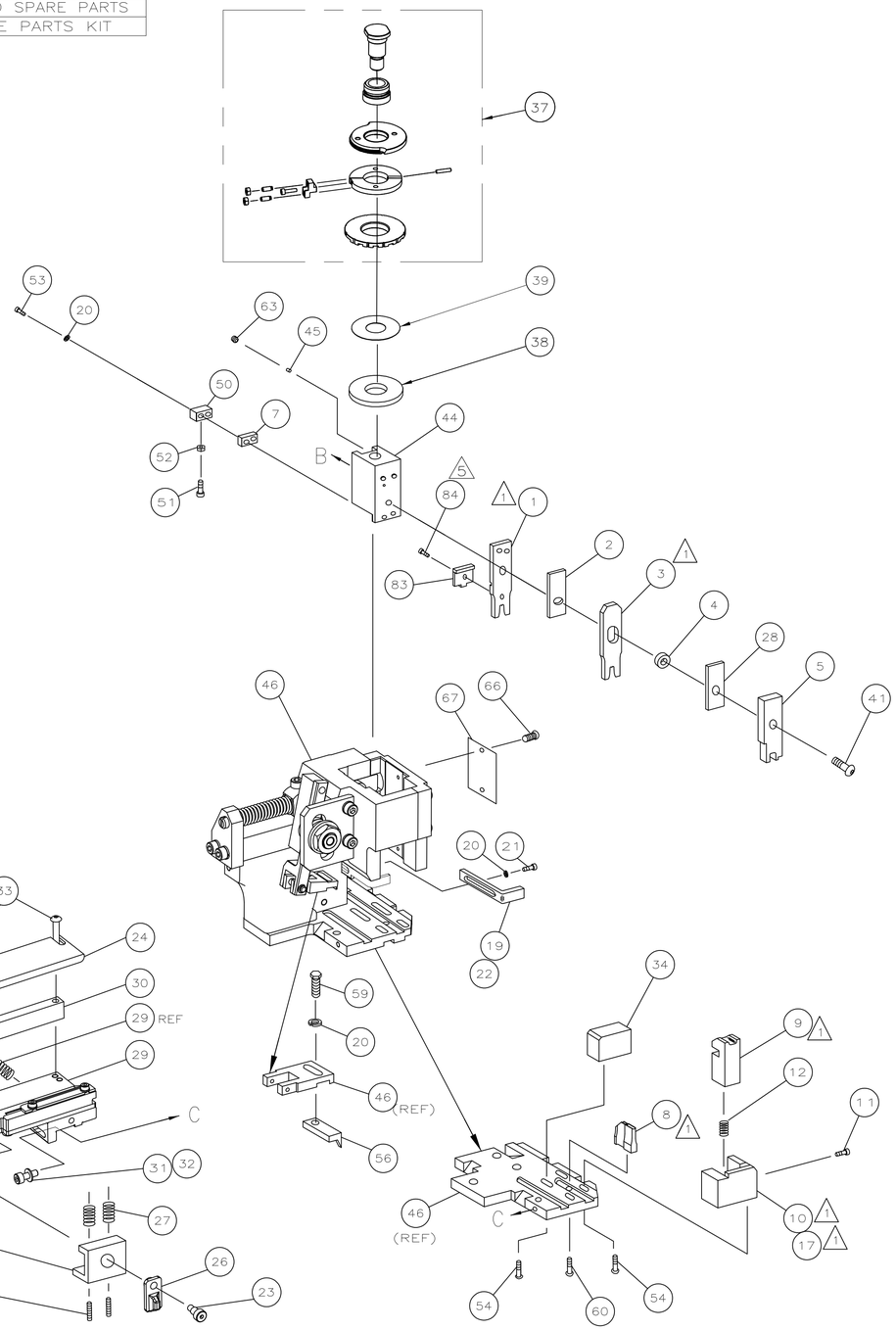

(5)	–	1	1	1	1	1	1	985575–1	SCR,FHC (M3X6) DEPRESSOR	84
	–	1	1	1	1	1	1	224405–4	DEPRESSOR, WIRE, SPECIAL	83
	–	1	1	1	1	1	1	1528520	PRINT, APPLICATOR LOG SHEET	72
	–	1	1	1	1	1	1	1338705–3	DOCUMENTATION PACKAGE	71
										69
										68
	–	1	1	1	1	1	1	461264–5	PLATE, IDENTIFICATION	67
	–	2	2	2	2	2	2	21017–2	SCR,DRIVE(#2x.19)ID PLATE	66
										65
										64
	–	1	1	1	1	1	1	3–18031–0	SCR,SKT SET(M6X6)RAM	63
										62
	–	2	2	2	2	2	2	2–18032–5	SCR,SKT SET (M5X20)DRAG	61
	–	1	1	1	1	1	1	18024–7	SCR,BHC(M4X10)ANVIL	60
	–	1	1	1	1	1	1	5–18022–2	SCR,HEX(M4X8)FEED FINGER	59
										58
										57
	–	1	1	1	1	1	1	1338685–1	PAWL, FEED	56
										55
	–	4	4	4	4	4	4	18024–8	SCR,BHC(M4x12)SHEAR HOLDER	54
	–	2	2	2	2	2	2	9–18023–6	SCR,SHC(M4x14)TERM HLD DWN	53
	–	1	1	1	1	1	1	18030–1	NUT,HEX(M3)HOLD DOWN	52
	–	1	1	1	1	1	1	811242–5	BUMPER, HOLDDOWN	51
	–	1	1	1	1	1	1	690753–2	SPACER, TONKER	50
	–	1	1	1	1	1	1	18024–3	SCR,BHC(M3X10)CAM	49
	–	–	1	–	–	1	–	1338675–1	CAM, PRE FEED 30 & 40 mm ST	48
	–	1	–	1	1	–	1	1338676–1	CAM, POST FEED 30 & 40 mm ST	47
	–	1	1	1	1	1	1	1320999–3	APPLICATOR BASIC SUBASSY	46
	–	1	1	1	1	1	1	690191–1	PLUG, NYLON	45
	–	1	1	1	1	1	1	1338660–1	RAM	44
										43
										42
	–	1	1	1	1	1	1	2–18024–6	SCR,BHC(M8X25)RAM	41
										40
	–	1	1	1	1	1	1	690125–1	SHIM SUBASSY	39
	–	1	1	1	1	1	1	469367–2	SPACER, FINE ADJUST	38
	–	1	1	1	1	1	1	879103–2	FINE ADJUST HEAD SUBASSY	37
										36
										35
	–	1	1	1	1	1	1	1320934–6	SUPPORT, TERMINAL	34
	–	2	2	2	2	2	2	1–18024–0	SCR,BHC(M4X20)STRIP GUIDE	33
	–	1	1	1	1	1	1	18027–2	WASHER, FLAT(M4)	32
	–	1	1	1	1	1	1	1–18023–2	SCR,SKT CAP(M4X12)MOUNT BLOCK	31
	–	1	1	1	1	1	1	1320908–2	SPACER, STRIP GUIDE	30
	–	1	1	1	1	1	1	1633073–4	STRIP GUIDE PLATE ASSY	29
	–	1	1	1	1	1	1	455888–4	SPACER, FRONT SHEAR DEP	28
	–	2	2	2	2	2	2	1–22284–0	SPRING, DRAG	27
	–	1	1	1	1	1	1	356835–1	LEVER, DRAG RELEASE	26
	–	1	1	1	1	1	1	240792–1	DRAG, TERMINAL	25
	–	1	1	1	1	1	1	1320928–1	PLATE, STRIP GUIDE	24
	–	1	1	1	1	1	1	980371–4	SCR,SHC SHLD	23
	–	1	–	1	1	–	1	1–690472–4	STRIPPER	22
	–	1	1	1	1	1	1	1–18023–1	SCR,SHC(M4X10)STRIPPER	21
	–	4	4	4	4	4	4	18025–2	WASHER,LOCK(M4)STRIPPER	20
	–	–	1	–	–	1	–	1–690472–9	STRIPPER	19
										18
(1)	–	1	–	–	1	–	–	1338684–1	HOLDER, SHEAR, FRONT (NO–CUT)	17
										16
										15
										14
										13
	–	1	1	1	1	1	1	3–22280–3	SPRING, SHEAR	12
	–	1	1	1	1	1	1	356885–4	STOP, SHEAR	11
(3)	–	–	1	1	–	1	1	1320921–1	HOLDER, SHEAR, FRONT (CUT)	10
	–	1	1	1	1	1	1	462006–1	SHEAR, FLOAT (FRONT)	9
	1	2	2	2	1	1	1	7–1333225–1	ANVIL	8
	–	1	1	1	1	1	1	3–240641–4	SPACER, DEPRESSOR (REAR)	7
										6
	–	1	1	1	1	1	1	2–455889–4	DEPRESSOR, SHEAR (FRONT)	5
	–	1	1	1	1	1	1	238011–4	SPACER, BLOCK CRIMPER	4
(1)	1	2	2	2	1	1	1	3–1583690–3	CRIMPER, INSULATION	3
	–	1	1	1	1	1	1	1–455888–0	SPACER, CRIMPER	2
(1)	1	2	2	2	1	1	1	1–856313–9	CRIMPER, WIRE	1
	–77	–76	–72	–71	–6	–2	–1	PART NO	DESCRIPTION	ITEM NO
	QTY REQD PER ASSY								PARTS LIST	

USED ON –

(1) RECOMMENDED SPARE PARTS.
2. GREASE RAM, CAM, CAM FOLLOWER AND FEED ROD LIGHTLY.
3. LUBRICATE DAILY PER THE APPLICATOR INSTRUCTION SHEET SUPPLIED WITH THE APPLICATOR.
(4) ALL CRIMP DATA SUPPLIED BY TERMINAL MANUFACTURER.
(5) CUT TO LENGTH ON ASSEMBLY AS REQUIRED.

VIEW B ROTATED 180°

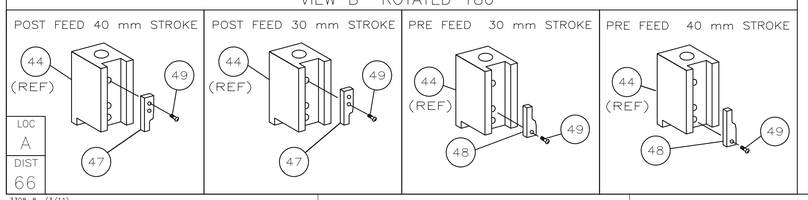

* WARNING:

ON INSTALLATION, SET WIRE DISC TO LARGEST WIRE SIZE SETTING. USE OF SETTINGS BELOW MIN REQUIRED CRIMP HEIGHT SETTING WILL CAUSE DAMAGE TO CRIMP TOOLING.

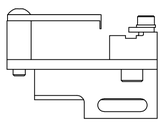

P	LTR	REVISION RECORD	DATE	DWN	APVD
	C1	ECR–13–008359	5–2013	MY	TE

DIMENSIONS: INCHES

TOLERANCES UNLESS OTHERWISE SPECIFIED:
0 PLC ± –
1 PLC ± –
2 PLC ± –
3 PLC ± –
4 PLC ± –
ANGLES ± –
SURFACE TEXTURE

DWN L.LOFTHOUSE	15MAR05	MATERIAL – –	HEAT TREAT – –
CHK –			
APVD F.BACKHURST	15MAR05	TE Connectivity	
NAME FINE ADJ SIDE FD HD–I APPL			
SCALE –	SIZE A1	DRAWING NO 1528520	SHEET 1 OF 1 REV C1

CUSTOMER ACCESSIBLE PRODUCTION DRAWING

THIS INFORMATION IS CONFIDENTIAL AND PROPRIETARY TO TYCO ELECTRONICS CORPORATION AND ITS WORLDWIDE SUBSIDIARIES AND AFFILIATES (COLLECTIVELY "TE"). IT MAY BE DISCLOSED ONLY TO THOSE THAN TE PERSONNEL, WITHOUT AUTHORIZATION FROM TE (www.TE.com).

3308–8 (3/11)

Общество с ограниченной ответственностью «МосЧип» ИНН 7719860671 / КПП 771901001
Адрес: 105318, г.Москва, ул.Щербаковская д.3, офис 1107

Данный компонент на территории Российской Федерации

Вы можете приобрести в компании MosChip.

Для оперативного оформления запроса Вам необходимо перейти по данной ссылке:

http://moschip.ru/get-element

Вы можете разместить у нас заказ для любого Вашего проекта, будь то серийное производство или разработка единичного прибора.

В нашем ассортименте представлены ведущие мировые производители активных и пассивных электронных компонентов.

Нашей специализацией является поставка электронной компонентной базы двойного назначения, продукции таких производителей как XILINX, Intel (ex.ALTERA), Vicor, Microchip, Texas Instruments, Analog Devices, Mini-Circuits, Amphenol, Glenair.

Сотрудничество с глобальными дистрибьюторами электронных компонентов, предоставляет возможность заказывать и получать с международных складов практически любой перечень компонентов в оптимальные для Вас сроки.

На всех этапах разработки и производства наши партнеры могут получить квалифицированную поддержку опытных инженеров.

Система менеджмента качества компании отвечает требованиям в соответствии с ГОСТ Р ИСО 9001, ГОСТ РВ 0015-002 и ЭС РД 009

Офис по работе с юридическими лицами:

105318, г.Москва, ул.Щербаковская д.3, офис 1107, 1118, ДЦ «Щербаковский»

Телефон: +7 495 668-12-70 (многоканальный)

Факс: +7 495 668-12-70 (доб.304)

E-mail: info@moschip.ru

Skype отдела продаж:
moschip.ru
moschip.ru_4
moschip.ru_6
moschip.ru_9