NB6L295MNGEVB, NB6L295MMNGEVB

NB6L295MNG/ NB6L295MMNG Evaluation Board User's Manual

ON Semiconductor®

http://onsemi.com

EVAL BOARD USER'S MANUAL

Introduction and Board Description

The NB6L295M Evaluation Board was designed to provide a flexible and convenient platform to quickly evaluate, characterize and verify the operation and performance of either the NB6L295MMNG (CML) or the NB6L295MNG (LVPECL) Dual Channel Programmable Delay.

This evaluation board manual contains:

- Information on the NB6L295M Evaluation Board
- Appropriate Lab Setup
- Detailed Board Features
- Bill of Materials

This manual should be used in conjunction with the device datasheet NB6L295M/D or NB6L295/D which contains full technical details on the device specifications and operation.

The NB6L295M Evaluation Board was also designed to accommodate a custom QFN−24 socket. Therefore, some external components were installed on the bottom side of the board.

Board Features

- On board programmable SDI circuitry minimizing cabling, or, external SDI accessed through SMA connectors.
- Convenient and compact board layout
- 2.5 V or 3.3 V single or split−power supply operation (banana jack connectors for VCC, SMAGND and DUTGND; Separate PLDVCC power supply for on board PLD
- CML or LVPECL differential output signals are accessed via SMA connectors with provision for load termination resistors
- SMA connectors are provided for 1) all high−speed differential input & (CML or LVPECL) output signals and 2) for external SDI & control signals access

Board Layout

The evaluation board is constructed in four layers. The top layer is the primary trace layer and is made with polyimide material. This layer provides a high−bandwidth 50 Ω controlled trace impedance environment for the equal length inputs and outputs. The second layer is a copper ground plane.

Layer Stack

L1 Signal − "High and Low Speed"
L2 SMA Ground
L3 VCC (Device positive power supply) and DUTGND (Device negative power supply)
L4 Signal − "Low Speed"

What measurements can you expect to make?

With this evaluation board, the following measurements could be performed in single ended or differential modes of operation.

- Propagation and Programmed Delay
- Output Rise and Fall Time
- Frequency Performance
- Jitter
- VCMR − Common Mode Range

© Semiconductor Components Industries, LLC, 2012

April, 2012− Rev. 3

Publication Order Number:
EVBUM2082/D

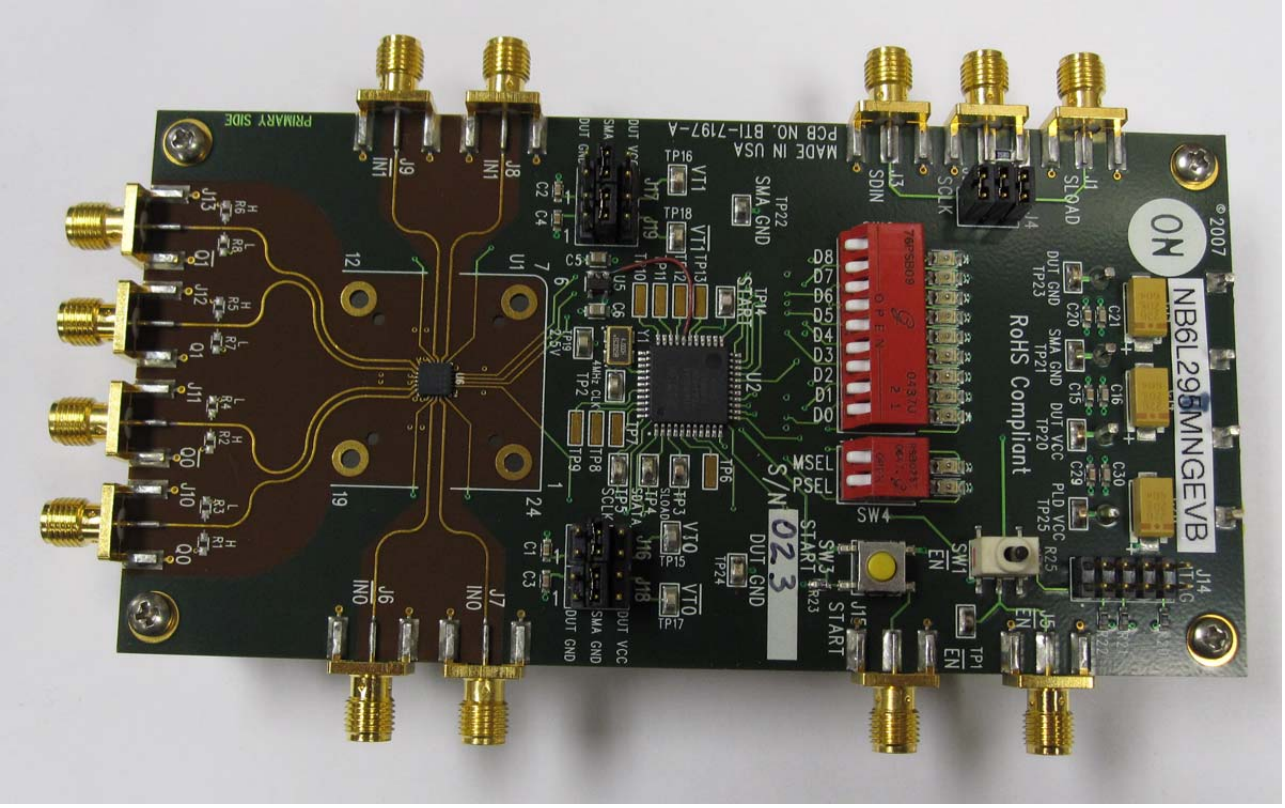

Figure 1. NB6L295MNGEVB Evaluation Board Photo

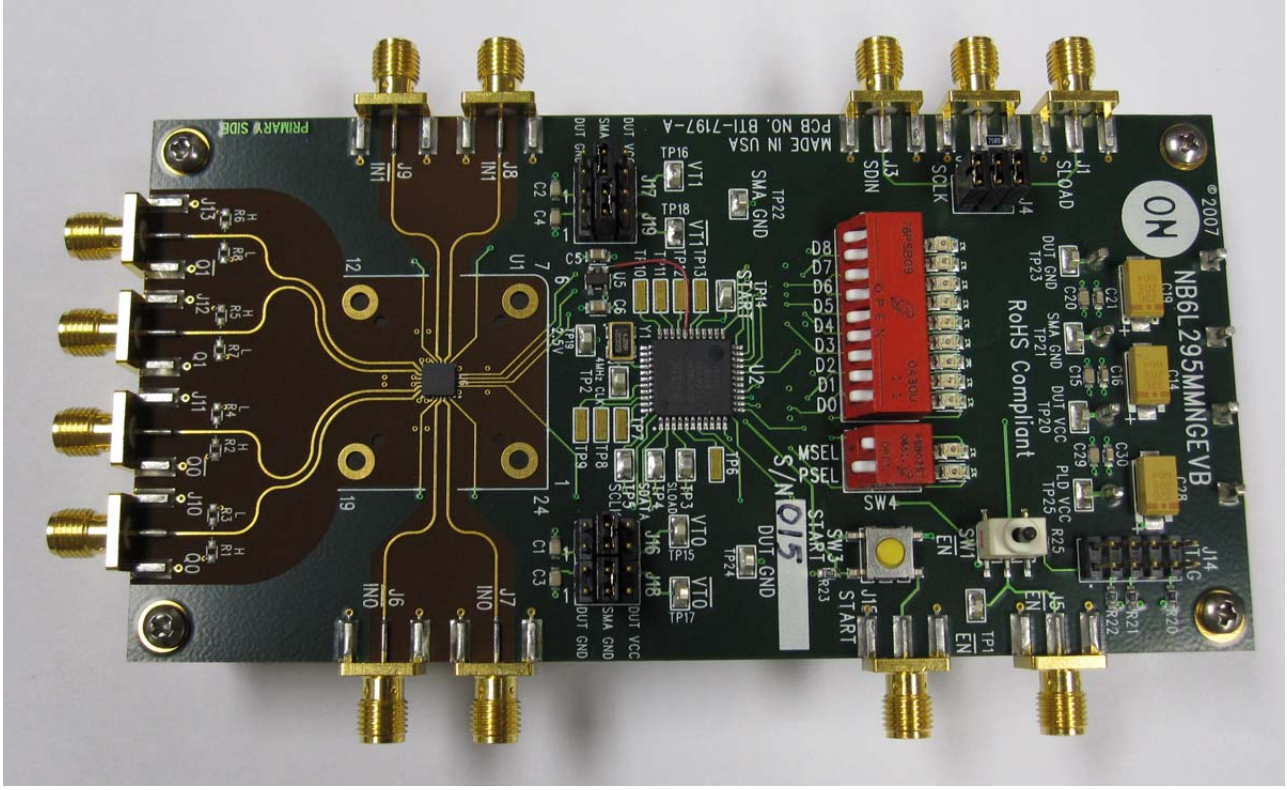

Figure 2. NB6L295MMNGEVB Evaluation Board Photo

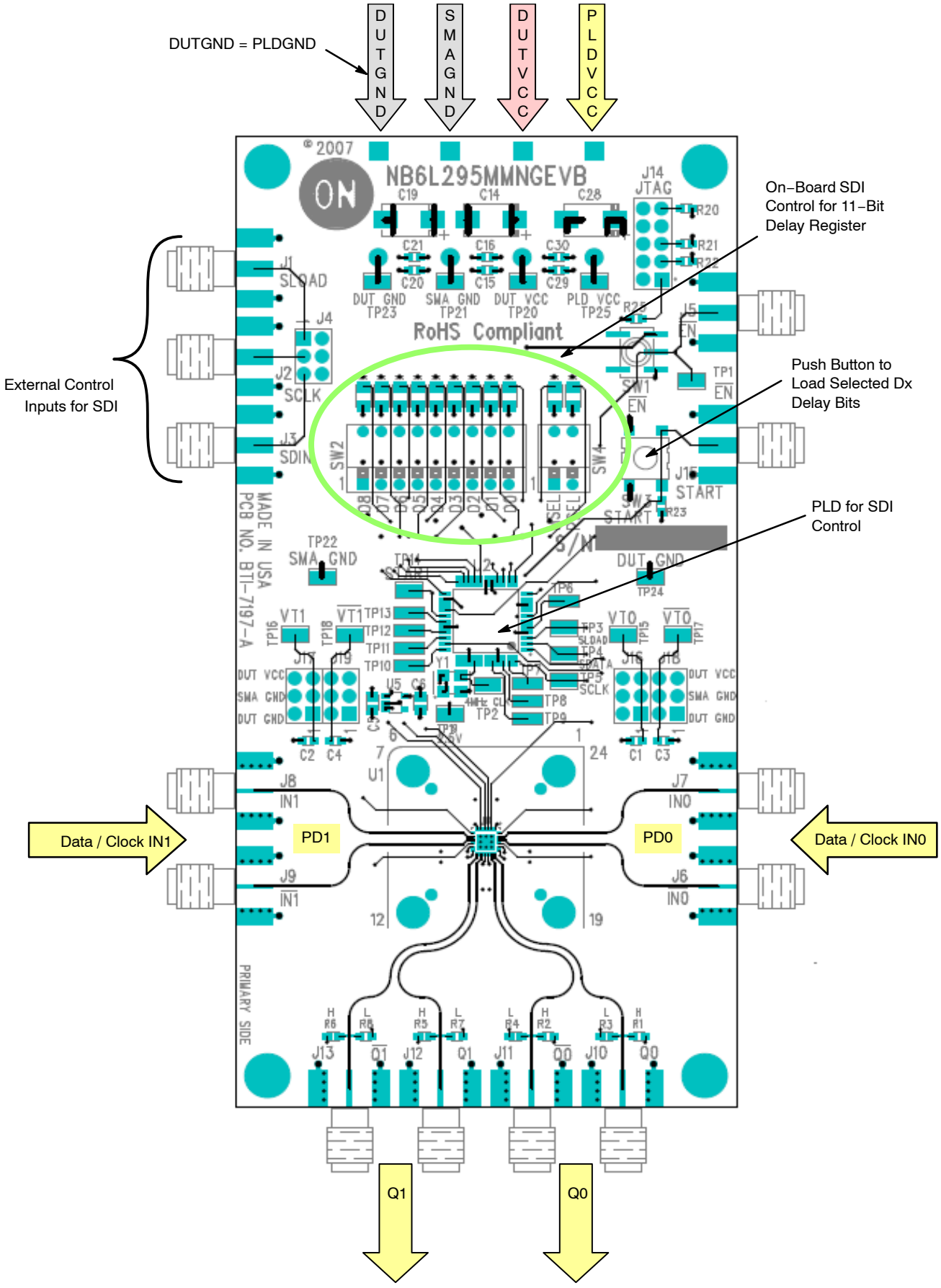

Figure 3. NB6L295M Evaluation Board Layout Overview

TEST AND MEASUREMENT SETUP AND PROCEDURE

Basic Lab Equipment (or Equivalent)

- Agilent Signal Generator #8133A for INx / $\overline{\text{INx}}$, external Clock or Data source
- Tektronix TDS8000 Oscilloscope or Frequency Counter
- Agilent #6624A DC Power Supply
- Digital Voltmeter
- Matched high−speed cables with SMA connectors

Lab Setup

A typical lab setup for taking time domain measurements in differential mode operation is shown in Figures 6 and 7. The following steps should be followed for proper equipment setup:

Step 1: Connect Power Supply

The NB6L295M and NB6L295 have positive supply pins, VCC, VCC0 and VCC1, and negative supply pins, (DUT)GND. The SMAGND (V_{TT}) terminal is the isolated termination ground plane for the outputs, only, and is not to be confused with the device ground pin, (DUT)GND.

Three power levels must be provided to the board, VCC, DUTGND, and SMAGND. Connect a power supplies to banana jack connectors for VCC, PLDVCC, DUTGND and SMAGND, which are provided on the bottom of the board. By−pass capacitors have been installed from VCC to SMAGND and from DUTGND to SMAGND at the banana jacks.

DUTGND = PLDGND, therefore, when device power supply is 2.5 V or 3.3 V, PLDVCC = DUTVCC. The exposed pad on the PCB for the QFN−24 package is connected to DUTGND.

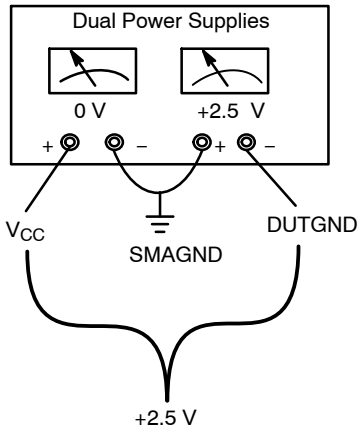

Figure 4. "Split" or Dual Power Supply Connections for NB6L295M, CML Outputs

Table 1. NB6L295M, CML OUTPUTS OFFSET POWER SUPPLY CONFIGURATIONS

Device Pin	Power Supply Connector Color	"Spilt" Power Supply
PLDVCC	Yellow	PLDVCC = 0 V
VCC	Red	V_{CC} = 0 V
SMAGND	Black	V_{TT} = 0 V
DUTGND	Black	DUTGND = −2.5 V or −3.3 V

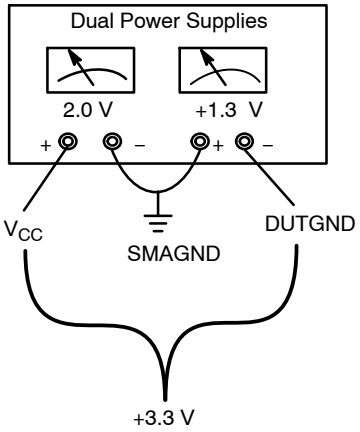

Figure 5. "Split" or Dual Power Supply Connections for NB6L295, LVPECL Outputs

Table 2. NB6L295, LVPECL OUTPUTS "SPLIT" POWER SUPPLY CONFIGURATIONS

Device Pin	Power Supply Connector Color	"Spilt" Power Supply
PLDVCC	Yellow	PLDVCC = +2.0 V
VCC	Red	V_{CC} = +2.0 V
SMAGND	Black	V_{TT} = 0 V
DUTGND	Black	DUTGND = −0.5 V or −1.3 V

Step 2: CML & LVPECL Output Load Termination

NB6L295M – CML Outputs (see Figures 4 and 7)

The CML Qx and $\overline{Qx}$ outputs must be externally DC loaded and AC terminated. A "split" or dual power supply technique can be used to take advantage of terminating the CML outputs into 50 Ω to Ground of an oscilloscope or a frequency counter. Since $V_{TT} = V_{CC}$, offsetting V_{CC} to 0 V yields V_{TT} = 0 V or Ground (SMAGND).

NB6L295 – LVPECL Outputs (see Figures 5 and 6)

The LVPECL Qx and $\overline{Qx}$ outputs have standard, open emitter outputs and must be externally DC loaded and AC terminated.

Taking advantage of the internal 50 Ω to ground of the test equipment, a split power supply technique will assure the equal output loading and termination of both outputs. Connect the Qx and $\overline{Qx}$ outputs of the device to the oscilloscope with equally matched cables. Both outputs must be equally loaded and terminated. The outputs are now DC loaded and AC terminated with 50 Ω to V_{TT}, which is the Ground internal to the oscilloscope. Since $V_{TT} = V_{CC} - 2$ V, offsetting V_{CC} to +2.0 V yields V_{TT} = 0 V or Ground (SMAGND).

The V_{TT} terminal connects to the isolated SMAGND connector ground plane, and is not to be confused with the device ground pin, DUTGND.

NOTE: When a single−ended output is being used, the unconnected output for the pair **must be** terminated to V_{TT} through a 50 Ω resistor for best operation. Unused output pairs may be left unconnected. Since V_{TT} = 0 V, a standard 50 Ω SMA termination plug can be used.

Step 3: Connect and Setup Inputs

Set the signal generator amplitude to appropriate logic levels For Clock, set the generator output for a square wave clock signal with a 50% duty cycle.

For Differential Mode

Connect the differential outputs of the generator with equally matched cables to the differential inputs of the device (INx and $\overline{INx}$). The differential inputs of the NB6L295 incorporate internal 50 Ω termination resistors.

For Single−Ended Mode

Connect the single−ended output of the generator to the INx input of the device. V_{th} must be applied to the complementary input ($\overline{INx}$) when operating in single−ended mode. Refer to the device datasheet for details on single−ended operation.

The VTx and $\overline{VTx}$ termination pins each have a trace from package pin to a node where it can be connected to either VCC, DUTGND or SMAGND, depending on the user's need.

Step 4: Program the SDI

The internal delay registers of the NB6L295/NB6L295M may be programmed by a) the onboard PLD or b) by using the three−lines for an external Serial Data Interface (SDI) consisting of a SERIAL DATA (SDATA) input, a SERIAL CLOCK (SCLK) input, and a SERIAL LOAD (SLOAD) as follows:

a) **Onboard PLD**

When using the onboard PLD for the SDI source,

1. Install the three jumpers located at J4
2. Insure PLDVCC power is applied
3. The 11−bit switches will program the NB6L295's 11−bit shift register. Set SW2 and SW4 switches to the desired values for the 11−bit word
4. Load the program values by depressing momentary switch SW3, or send a pulse signal (125 ns min) through J1.

Refer to the NB6L295 datasheet for details on the proper settings for these switches.

b. **External SDI**

An external SDI source can also program the NB6L295/NB6L295M. See datasheet DC Table, AC Table, as well as Figures 7 and 8. When using an external SDI source, remove the three jumpers at J4.

To use the SDI ports, generate input SCLK, SDATA, and SLOAD signals via the appropriate SMA connectors with OFFSET LVCMOS/LVTTL LEVELS, i.e. +2.0 V HIGH and −1.3 V LOW for a 3.3 V LVPECL power supply. The SCLK signal will sample the information presented on SDATA line. Values are loaded and indexed into a 11−bit shift register. The register shifts once per rising edge of the SCLK input. The serial input SDATA bits must each meet setup and hold timing to the respective SCLK rising edge as specified in the AC Characteristics section of the datasheet document. The LEAST Significant Bit (LSB), PSEL, is indexed in first followed by MSEL and D0, D1, D2, D3, D4, D5, D6, and D7, through MOST Significant Bit (MSB), D8, indexed in last. A Pulse on the SLOAD pin after the SHIFT register is fully indexed (11 clocks) will load and latch the data values for the internal registers.

The SLOAD pulse Low to HIGH rising edge transition transfers the data from the SHIFT register to the LATCH register. The SLOAD Pulse HIGH to LOW transition will lock the new data values into the LATCH register.

After the PLD programs the NB6L295/NB6L295M, PLDVCC can be disconnected.

Input/Output Enable –$\overline{EN}$: When switch SW1 is in the UP position or is externally connected to a LOW through J15 SMA connector, the outputs are ENABLED.

To monitor the Qx and $\overline{Qx}$ outputs on an oscilloscope or frequency counter:

- The power supply needs to be DC offset
- Assure that the instrument has internal 50 Ω termination impedance to ground
- Ensure the oscilloscope is triggered properly

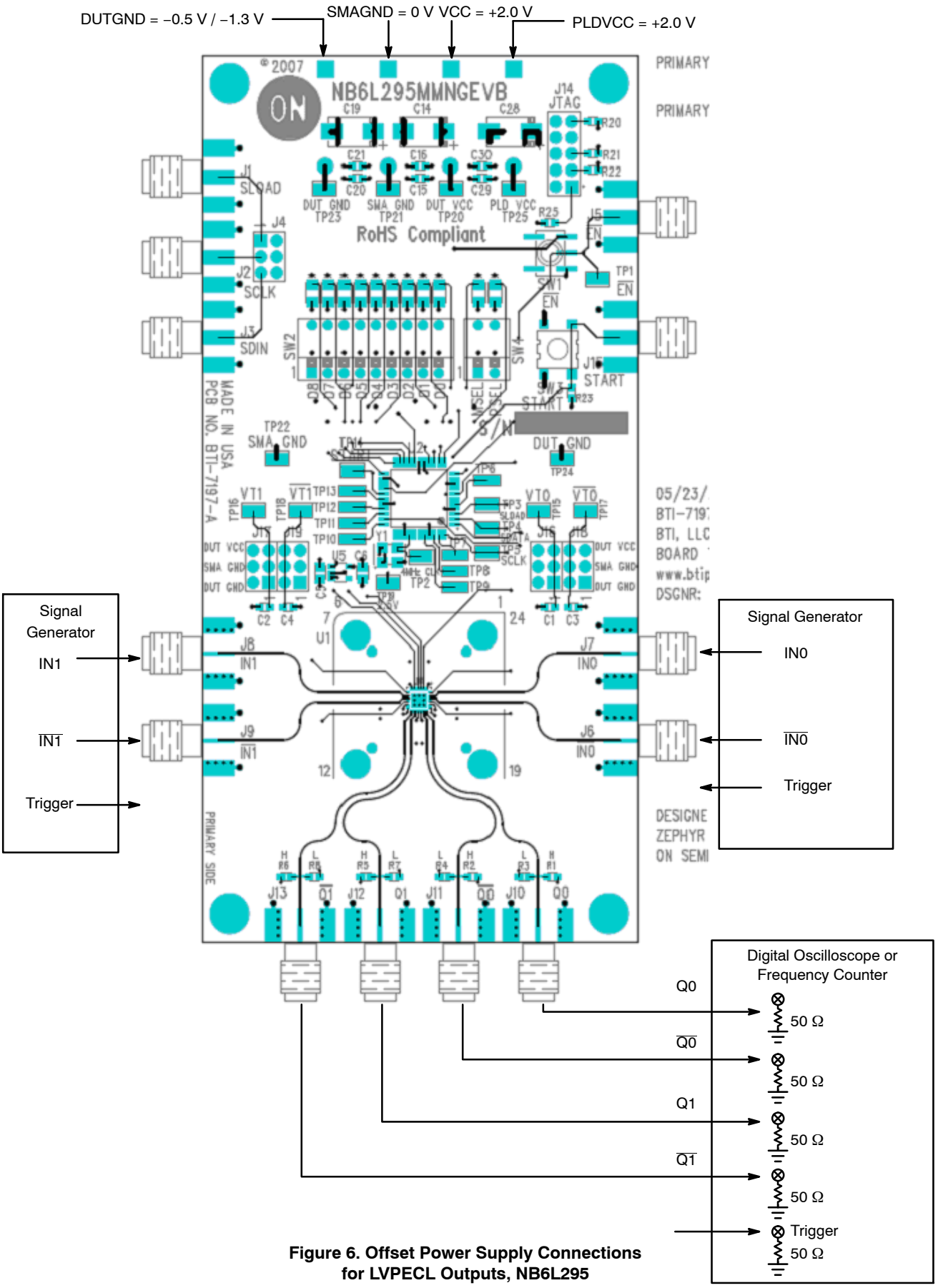

Figure 6. Offset Power Supply Connections for LVPECL Outputs, NB6L295

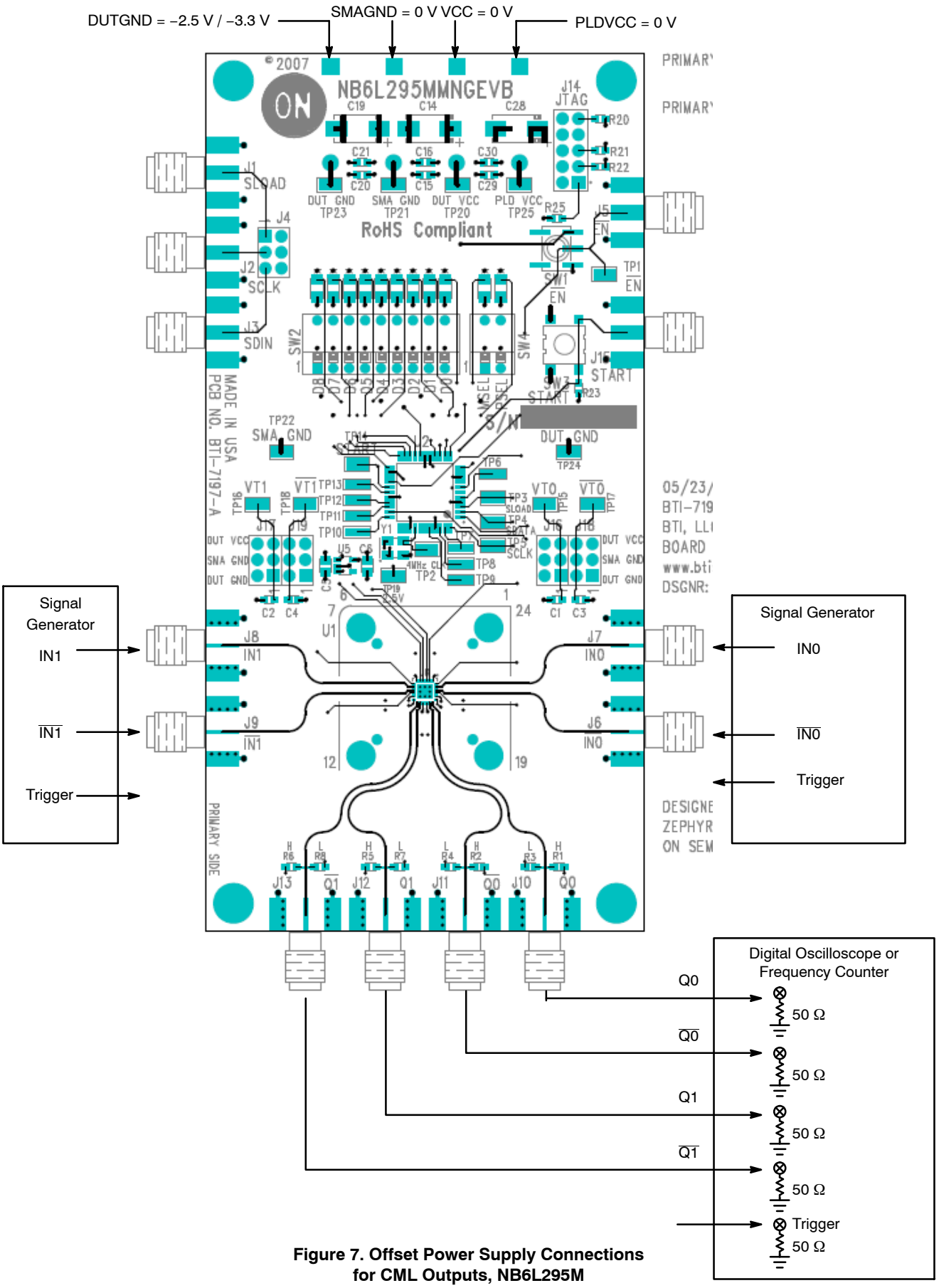

Figure 7. Offset Power Supply Connections for CML Outputs, NB6L295M

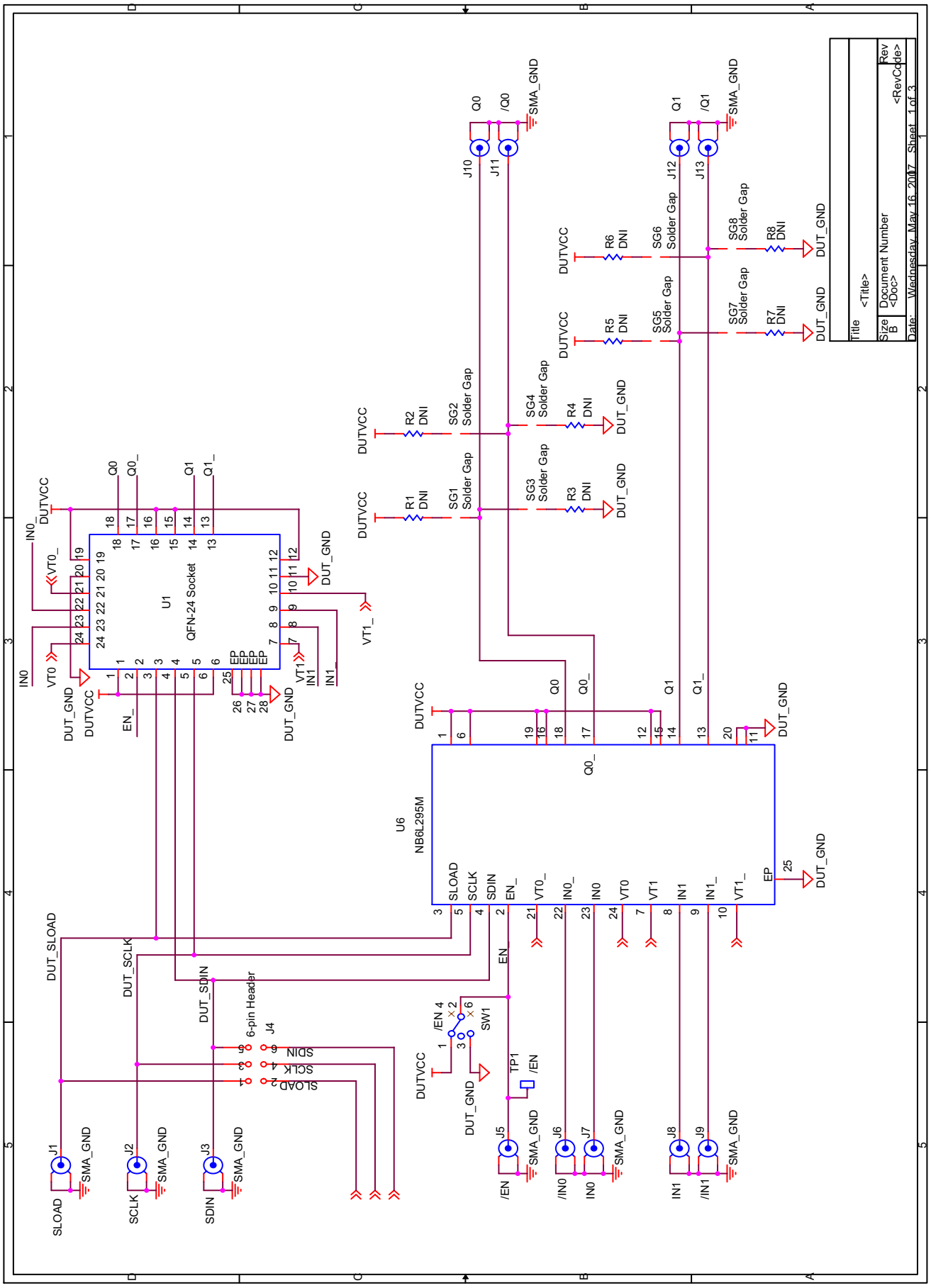
U1
QFN-24 Socket
U6
NB6L295M
J4
6-pin Header
SW1
TP1
J1
J2
J3
J5
J6
J7
J8
J9
J10
J11
J12
J13
SMA_GND
DUTVCC
DUT_GND
DUT_SLOAD
DUT_SCLK
DUT_SDIN
SLOAD
SCLK
SDIN
/EN
IN0
/IN0
IN1
/IN1
Q0
/Q0
Q1
/Q1
Q0_
Q1_
EN_
VT0_
IN0_
VT0
VT1
IN1_
VT1_
R1 DNI
R2 DNI
R3 DNI
R4 DNI
R5 DNI
R6 DNI
R7 DNI
R8 DNI
SG1 Solder Gap
SG2 Solder Gap
SG3 Solder Gap
SG4 Solder Gap
SG5 Solder Gap
SG6 Solder Gap
SG7 Solder Gap
SG8 Solder Gap
Title
<Title>
Size B
Document Number
<Doc>
Rev
<RevCode>
Date: Wednesday, May 16, 2007
Sheet 1 of 3

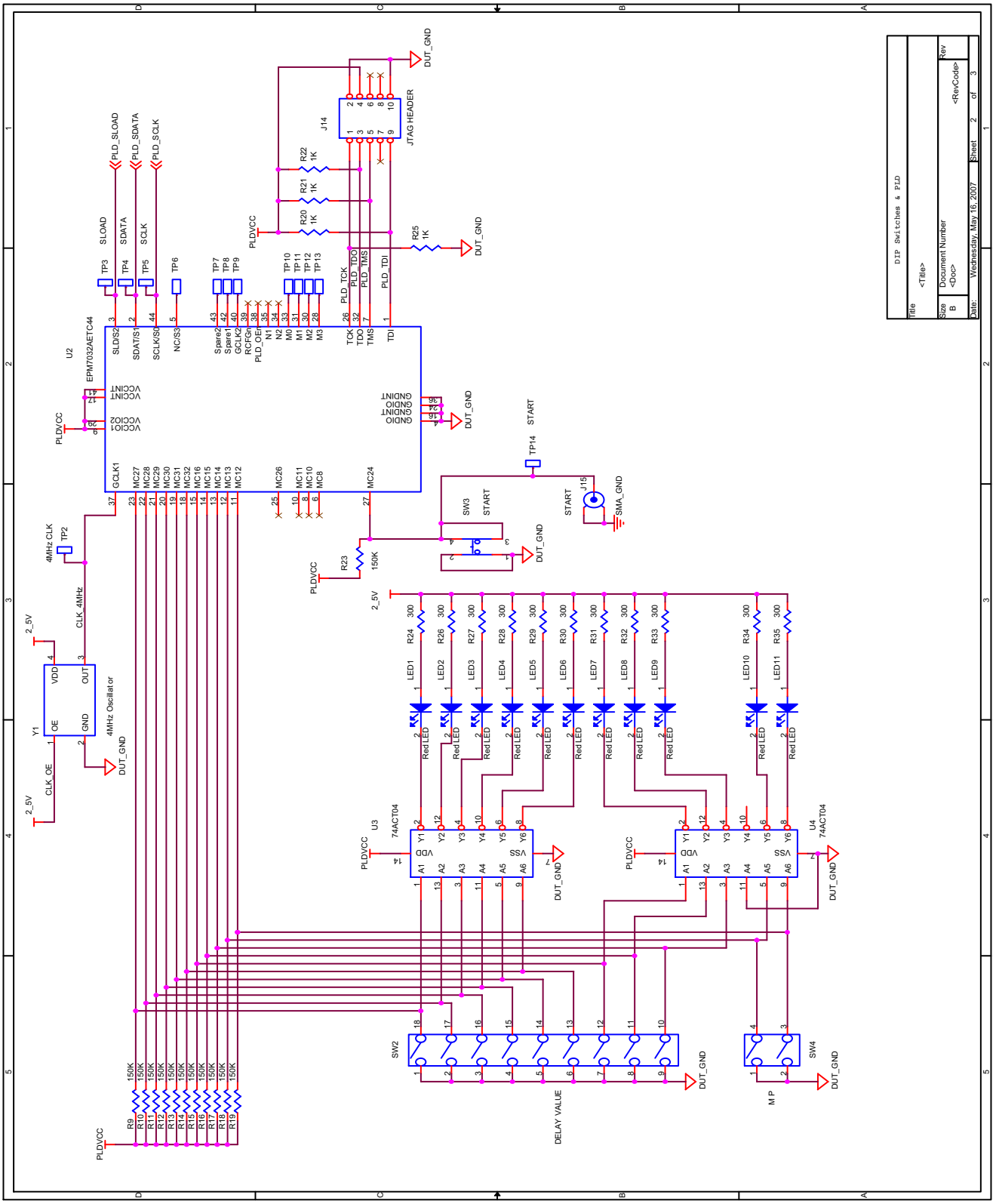
DIP Switches & PLD
Title
<Title>
Size
B
Document Number
<Doc>
Rev
<RevCode>
Date: Wednesday, May 16, 2007
Sheet 2 of 3
U2
EPM7032AETC44
JTAG HEADER
J14
U3
74ACT04
U4
74ACT04
Y1
4MHz Oscillator
SW2
DELAY VALUE
SW3
START
SW4
M P
J15
SMA_GND
DUT_GND
PLDVCC
2_5V
4MHz CLK
CLK_4MHz
CLK_OE
PLD_SLOAD
PLD_SDATA
PLD_SCLK
PLD_TCK
PLD_TDO
PLD_TMS
PLD_TDI

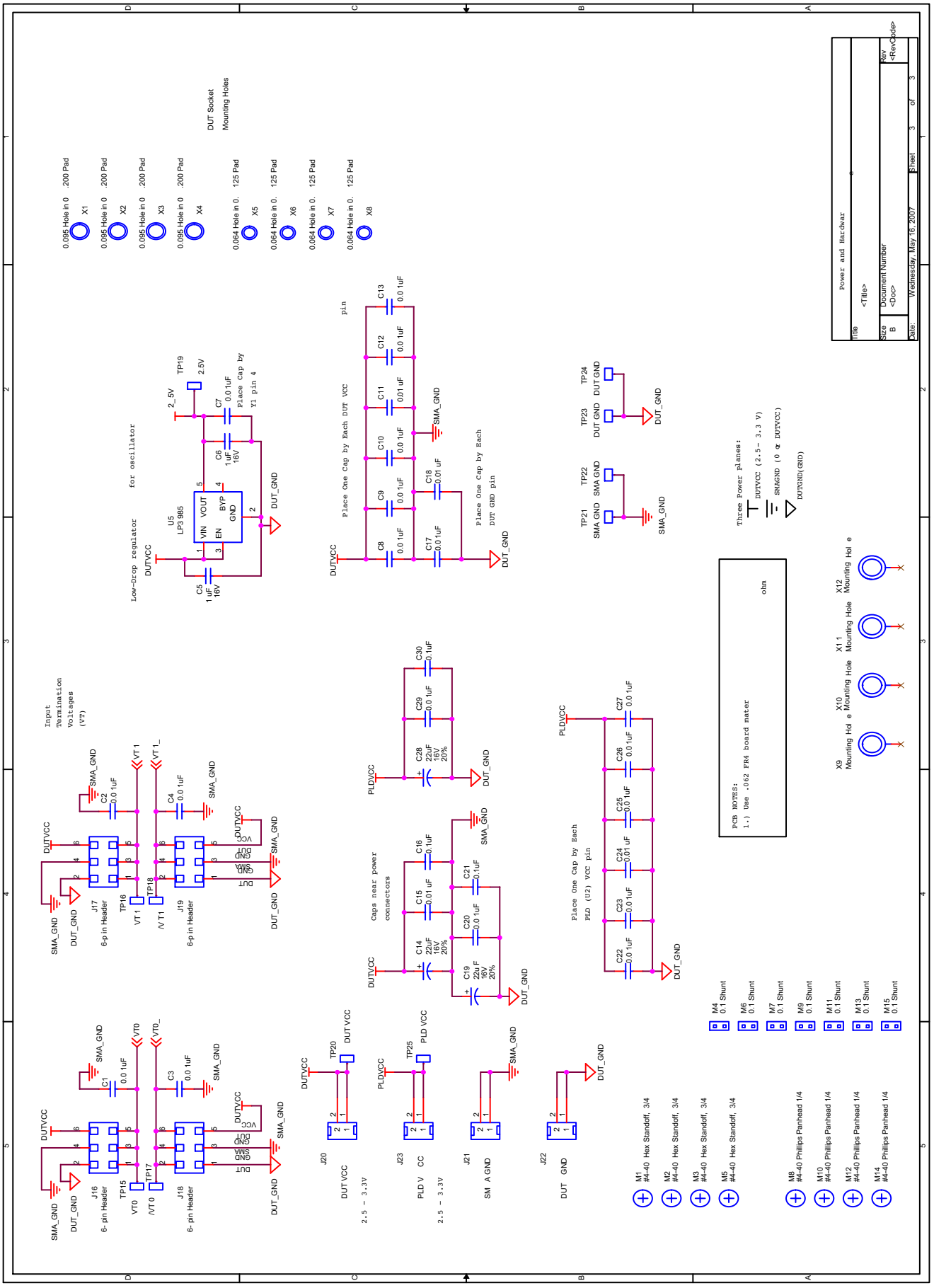
Power and Hardwar
Title
<Title>
Size
B
Document Number
<Doc>
Rev
<RevCode>
Date:
Wednesday, May 16, 2007
Sheet
3
of
3
Low-Drop regulator
for oscillator
U5
LP3 985
VIN
VOUT
EN
BYP
GND
DUTVCC
DUT_GND
2_5V
TP19
2.5V
C5
1 uF
16V
C6
1uF
16V
C7
0.0 1uF
Place Cap by
Y1 pin 4
Place One Cap by Each DUT VCC
pin
C8
C9
C10
C11
C12
C13
C17
C18
0.01 uF
SMA_GND
Place One Cap by Each
DUT GND pin
TP21
SMA GND
TP22
SMA GND
TP23
DUT GND
TP24
DUT GND
Three Power planes:
DUTVCC (2.5- 3.3 V)
SMAGND (0 or DUTVCC)
DUTGND(GND)
PCB NOTES:
1.) Use .062 FR4 board mater
ohm
X9
Mounting Hol e
X10
Mounting Hole
X11
Mounting Hole
X12
Mounting Hol e
Input
Termination
Voltages
(VT)
J17
6-p in Header
J19
6-p in Header
TP16
TP18
VT 1
/V T1
C1
C2
C3
C4
0.0 1uF
VT0
/VT 0
J16
6- pin Header
J18
6- pin Header
TP15
TP17
Caps near power
connectors
C14
22uF
16V
20%
C15
0.01 uF
C16
0.1uF
C19
22u F
16V
20%
C20
0.0 1uF
C21
0.1uF
C28
22uF
16V
20%
C29
0.0 1uF
C30
0.1uF
PLDVCC
Place One Cap by Each
PLD (U2) VCC pin
C22
C23
C24
C25
C26
C27
0.0 1uF
0.01 uF
J20
DUT VCC
2.5 - 3.3V
TP20
DUT VCC
J23
PLD V CC
2.5 - 3.3V
TP25
PLD VCC
J21
SM A GND
J22
DUT GND
M1
#4-40 Hex Standoff, 3/4
M2
#4-40 Hex Standoff, 3/4
M3
#4-40 Hex Standoff, 3/4
M5
#4-40 Hex Standoff, 3/4
M8
#4-40 Phillips Panhead 1/4
M10
#4-40 Phillips Panhead 1/4
M12
#4-40 Phillips Panhead 1/4
M14
#4-40 Phillips Panhead 1/4
M4
0.1 Shunt
M6
0.1 Shunt
M7
0.1 Shunt
M9
0.1 Shunt
M11
0.1 Shunt
M13
0.1 Shunt
M15
0.1 Shunt
0.095 Hole in 0 .200 Pad
X1
X2
X3
X4
0.064 Hole in 0. .125 Pad
X5
X6
X7
X8
DUT Socket
Mounting Holes

Table 3. NB6L295MMNGEVB BILL OF MATERIALS

Item	Qty	Part Number	Value	Ref. Des.	PCB Footprint	Vendor	Vendor PN	Manufacturer
1	22	C0603C103K5RACTU	0.01 μF	C1,C2,C3,C4,C7,C8,C9,C10,C11	603	Digikey	399−1091−1−ND	Kemet
				C12,C13,C15,C17,C18,C20,C22				
				C23,C24,C25,C26,C27,C29				
2	2	C0805C105K4RACTU	1 μF	C6,C5	805	Digikey	399−1284−1−ND	Kemet
3	3	T494D226K016AS	22 μF	C14,C19,C28	EIA−7343−31	Digikey	399−1782−1−ND	Kemet
4	3	ECJ−1VB1C104K	0.1 μF	C16,C21,C30	603	Digikey	PCC1762CT−ND	Panasonic
5	13	142−0701−801	SMA	J1,J2,J3,J5,J6,J7,J8,J9,	CON_SMA_142−0701−80x JOHNSON	Digi−Key	J502−ND	Johnson Components
				J10,J11,J12,J13,J15				
6	5	10−89−1061	6−pin Header	J4,J16,J17,J18,J19		Digikey	WM6806−ND	Molex
7	1	10−89−1101	JTAG HEADER	J14		Digikey	WM6810−ND	Molex
8	1	571−0500	Red BANANA JACK	J20	CON2_571−0500 DELTRON	Mouser	164−6219	Deltron
9	2	571−0100	BLK BANANA JACK	J22,J21	CON2_571−0500 DELTRON	Mouser	164−6218	Deltron
10	1	571−0700	Yellow BANANA JACK	J23	CON2_571−0500 DELTRON	Mouser	164−7170	Deltron
11	11	597−3111−407F	Red LED	LED1,LED2,LED3,LED4,LED5,	LED_1206_AK	Digikey	350−1565−1−ND	Dialight
				LED6,LED7,LED8,LED9,				
				LED10,LED11				
12	4	1895	#4−40 Hex Standoff, 3/4	M1,M2,M3,M5		Digikey	1895K−ND	Keystone
13	7	382811−5	0.1 Shunt	M4,M6,M7,M9,M11,M13,M15		Digikey	A26229−ND	AMP/Tyco
14	4	PMS 440 0025 PH	#4−40 Phillips Panhead 1/4	M8,M10,M12,M14		Digikey	H342−ND	Building Fasteners
15	8		DNI	R1,R2,R3,R4,R5,R6,R7,R8	603			
16	12	ERJ−3GEYJ154V	150k	R9,R10,R11,R12,R13,R14,	603	Digikey	P150KGCT−ND	Panasonic
				R15,R16,R17,R18,R19,R23				
17	4	ERJ−3GEYJ102V	1k	R20,R21,R22,R25	603	Digikey	P1.0KGCT−ND	Panasonic
18	11	ERJ−3GEYJ301V	300	R24,R26,R27,R28,R29,R30,	603	Digikey	P300GCT−ND	Panasonic
				R31,R32,R33,R34,R35				
20	1	GT13MSCBE	SW SPDT	SW1	SWS_GT13MSCBE_ITT	Digikey	CKN2092CT−ND	C&K
21	1	76PSB09ST	SW PianoDIP−9	SW2	SW_DIP_76PSB09 GRAYHILL	Digikey	GH7145−ND	Grayhill
22	1	B3S−1002	Push Button Switch	SW3	SW_EVQPLD_PAN	Digi−Key	SW416−ND	Omron
23	1	76PSB02ST	SW PianoDIP−2	SW4	SW_DIP_76PSB02 GRAYHILL	Digikey	GH7131−ND	Grayhill
24	17	5015	TP_5015_KEYSTONE	TP1,TP2,TP3,TP4,TP5,TP14,	TP_5015_KEYSTONE	Digikey	5015KCT−ND	Keystone
				TP15,TP16,TP17,TP18,TP19,				
				TP20,TP21,TP22,TP23,TP24,				
				TP25				
26	1	NB6L295 or NB6L295M	DUT	U1	QFN−24			ON Semiconductor
27	1	EPM7032AETC44−10	EPM7032AETC44	U2	TQFP80P1200X1200X120−44N	Arrow	EPM7032AETC44−10	Altera
28	2	74ACT04SC	74ACT04	U3,U4	SO14	Digi−Key	74ACT04SC−ND	Fairchild
29	1	LP3985IM5−2.5/NOPB	LP3985	U5	SOT23−5	Digi−Key	LP3985IM5−2.5CT−ND	National Semi
33	1	ECS−3525−040−B−TR	4MHz Oscillator	Y1	OSCS_3525_ECS	Digikey	XC1047CT−ND	ECS

ON Semiconductor and ON are registered trademarks of Semiconductor Components Industries, LLC (SCILLC). SCILLC reserves the right to make changes without further notice to any products herein. SCILLC makes no warranty, representation or guarantee regarding the suitability of its products for any particular purpose, nor does SCILLC assume any liability arising out of the application or use of any product or circuit, and specifically disclaims any and all liability, including without limitation special, consequential or incidental damages. “Typical” parameters which may be provided in SCILLC data sheets and/or specifications can and do vary in different applications and actual performance may vary over time. All operating parameters, including “Typicals” must be validated for each customer application by customer’s technical experts. SCILLC does not convey any license under its patent rights nor the rights of others. SCILLC products are not designed, intended, or authorized for use as components in systems intended for surgical implant into the body, or other applications intended to support or sustain life, or for any other application in which the failure of the SCILLC product could create a situation where personal injury or death may occur. Should Buyer purchase or use SCILLC products for any such unintended or unauthorized application, Buyer shall indemnify and hold SCILLC and its officers, employees, subsidiaries, affiliates, and distributors harmless against all claims, costs, damages, and expenses, and reasonable attorney fees arising out of, directly or indirectly, any claim of personal injury or death associated with such unintended or unauthorized use, even if such claim alleges that SCILLC was negligent regarding the design or manufacture of the part. SCILLC is an Equal Opportunity/Affirmative Action Employer. This literature is subject to all applicable copyright laws and is not for resale in any manner.

PUBLICATION ORDERING INFORMATION

LITERATURE FULFILLMENT:
Literature Distribution Center for ON Semiconductor
P.O. Box 5163, Denver, Colorado 80217 USA
Phone: 303−675−2175 or 800−344−3860 Toll Free USA/Canada
Fax: 303−675−2176 or 800−344−3867 Toll Free USA/Canada
Email: orderlit@onsemi.com

N. American Technical Support: 800−282−9855 Toll Free USA/Canada
Europe, Middle East and Africa Technical Support:
Phone: 421 33 790 2910
Japan Customer Focus Center
Phone: 81−3−5817−1050

ON Semiconductor Website: **www.onsemi.com**

Order Literature: http://www.onsemi.com/orderlit

For additional information, please contact your local Sales Representative

Общество с ограниченной ответственностью «МосЧип» ИНН 7719860671 / КПП 771901001
Адрес: 105318, г.Москва, ул.Щербаковская д.3, офис 1107

Данный компонент на территории Российской Федерации

Вы можете приобрести в компании MosChip.

Для оперативного оформления запроса Вам необходимо перейти по данной ссылке:

http://moschip.ru/get-element

Вы можете разместить у нас заказ для любого Вашего проекта, будь то серийное производство или разработка единичного прибора.

В нашем ассортименте представлены ведущие мировые производители активных и пассивных электронных компонентов.

Нашей специализацией является поставка электронной компонентной базы двойного назначения, продукции таких производителей как XILINX, Intel (ex.ALTERA), Vicor, Microchip, Texas Instruments, Analog Devices, Mini-Circuits, Amphenol, Glenair.

Сотрудничество с глобальными дистрибьюторами электронных компонентов, предоставляет возможность заказывать и получать с международных складов практически любой перечень компонентов в оптимальные для Вас сроки.

На всех этапах разработки и производства наши партнеры могут получить квалифицированную поддержку опытных инженеров.

Система менеджмента качества компании отвечает требованиям в соответствии с ГОСТ Р ИСО 9001, ГОСТ РВ 0015-002 и ЭС РД 009

Офис по работе с юридическими лицами:

105318, г.Москва, ул.Щербаковская д.3, офис 1107, 1118, ДЦ «Щербаковский»

Телефон: +7 495 668-12-70 (многоканальный)

Факс: +7 495 668-12-70 (доб.304)

E-mail: info@moschip.ru

Skype отдела продаж:
moschip.ru
moschip.ru_4
moschip.ru_6
moschip.ru_9