Surge Stopper with Fault Latchoff

FEATURES

- **Stops High Voltage Surges**
- **Adjustable Output Clamp Voltage**
- **Overcurrent Protection**
- **Wide Operation Range: 4V to 80V**
- **Reverse Input Protection to –60V**
- Low 7µA Shutdown Current
- Adjustable Latchoff Fault Timer
- Controls N-channel MOSFET
- Shutdown Pin Withstands –60V to 100V
- Fault Output Indication
- Auxiliary Amplifier for Level Detection Comparator or Linear Regulator Controller
- Available in (4mm × 3mm) 12-Pin DFN, 10-Pin MSOP or 16-Pin SO Packages

APPLICATIONS

- Automotive/Avionic Surge Protection
- Hot Swap/Live Insertion
- High Side Switch for Battery Powered Systems
- Intrinsic Safety Applications

, LT, LTC, LTM, Linear Technology and the Linear logo are registered trademarks and Hot Swap, No R_{SENSE} and ThinSOT are trademarks of Linear Technology Corporation. All other trademarks are the property of their respective owners.

DESCRIPTION

The LT®4356-3 surge stopper protects loads from high voltage transients. It regulates the output during an overvoltage event, such as load dump in automobiles, by controlling the gate of an external N-channel MOSFET. The output is limited to a safe value thereby allowing the loads to continue functioning. The LT4356-3 also monitors the voltage drop between the V_{CC} and SNS pins to protect against overcurrent faults. An internal amplifier limits the current sense voltage to 50mV. In either fault condition, a timer is started inversely proportional to MOSFET stress. If the timer expires, the $\overline{FLT}$ pin pulls low to warn of an impending power down. If the condition persists, the MOSFET is turned off, until the $\overline{SHDN}$ pin pulls low momentarily.

The auxiliary amplifier may be used as a voltage detection comparator or as a linear regulator controller driving an external PNP pass transistor.

Back-to-back FETs can be used in lieu of a Schottky diode for reverse input protection, reducing voltage drop and power loss. The $\overline{SHDN}$ input turns off the part, including the auxiliary amplifier, and reduces the quiescent current to less than 7µA.

TYPICAL APPLICATION

4A, 12V Overvoltage Output Regulator

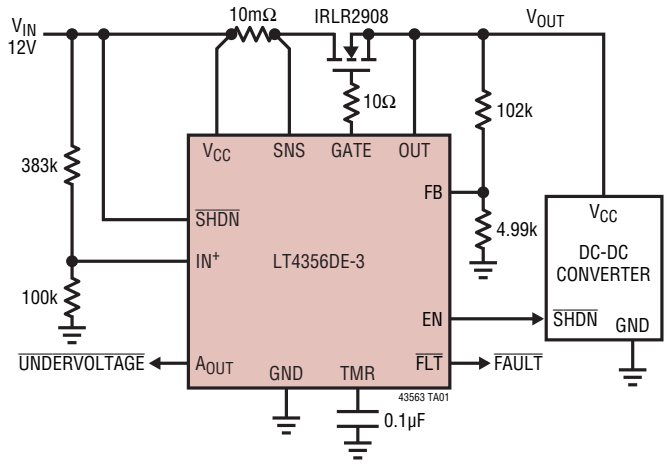

Overvoltage Protector Regulates Output at 27V During Transient

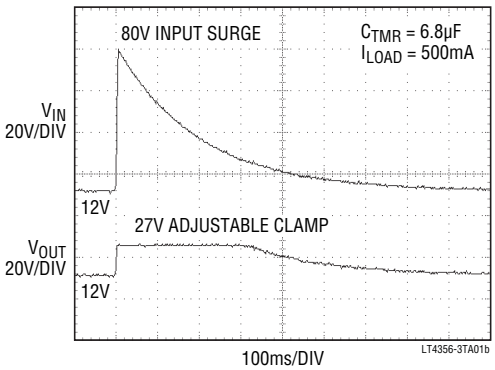

ABSOLUTE MAXIMUM RATINGS (Notes 1 and 2)

V_{CC}, $\overline{SHDN}$ ..... –60V to 100V
SNS..... V_{CC} – 30V or –60V to V_{CC} + 0.3V
OUT, A_{OUT}, $\overline{FLT}$, EN ..... –0.3V to 80V
GATE (Note 3) .....–0.3V to V_{OUT} + 10V
FB, TMR, IN^+..... –0.3V to 6V
A_{OUT}, EN, $\overline{FLT}$, IN^+.....–3mA
Operating Temperature Range
LT4356C-3 ..... 0°C to 70°C
LT4356I-3 ..... –40°C to 85°C
LT4356H-3 ..... –40°C to 125°C
LT4356MP-3 ..... –55°C to 125°C
Storage Temperature Range
DE12..... –65°C to 125°C
MS, SO ..... –65°C to 150°C
Lead Temperature (Soldering, 10 sec)
MS, SO ..... 300°C

PIN CONFIGURATION

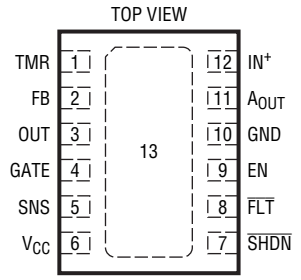

DE PACKAGE
12-LEAD (4mm × 3mm) PLASTIC DFN
T_{JMAX} = 125°C, θ_{JA} = 43°C/W
EXPOSED PAD (PIN 13) PCB GND CONNECTION OPTIONAL

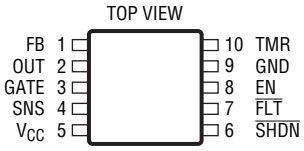

MS PACKAGE
10-LEAD PLASTIC MSOP
T_{JMAX} = 125°C, θ_{JA} = 160°C/W

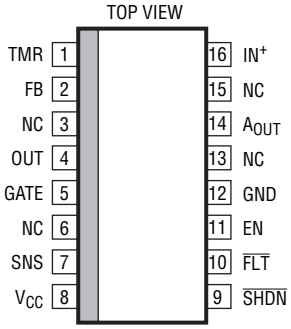

S PACKAGE
16-LEAD PLASTIC SO
T_{JMAX} = 150°C, θ_{JA} = 100°C/W

ORDER INFORMATION

LEAD FREE FINISH	TAPE AND REEL	PART MARKING*	PACKAGE DESCRIPTION	TEMPERATURE RANGE
LT4356CDE-3#PBF	LT4356CDE-3#TRPBF	43563	12-Lead (4mm × 3mm) Plastic DFN	0°C to 70°C
LT4356IDE-3#PBF	LT4356IDE-3#TRPBF	43563	12-Lead (4mm × 3mm) Plastic DFN	–40°C to 85°C
LT4356HDE-3#PBF	LT4356HDE-3#TRPBF	43563	12-Lead (4mm × 3mm) Plastic DFN	–40°C to 125°C
LT4356CMS-3#PBF	LT4356CMS-3#TRPBF	LTFFK	10-Lead Plastic MSOP	0°C to 70°C
LT4356IMS-3#PBF	LT4356IMS-3#TRPBF	LTFFK	10-Lead Plastic MSOP	–40°C to 85°C
LT4356HMS-3#PBF	LT4356HMS-3#TRPBF	LTFFK	10-Lead Plastic MSOP	–40°C to 125°C
LT4356MPMS-3#PBF	LT4356MPMS-3#TRPBF	LTGGZ	10-Lead Plastic MSOP	–55°C to 125°C
LT4356CS-3#PBF	LT4356CS-3#TRPBF	LT4356S-3	16-Lead Plastic SO	0°C to 70°C
LT4356IS-3#PBF	LT4356IS-3#TRPBF	LT4356S-3	16-Lead Plastic SO	–40°C to 85°C
LT4356HS-3#PBF	LT4356HS-3#TRPBF	LT4356S-3	16-Lead Plastic SO	–40°C to 125°C
LT4356MPS-3#PBF	LT4356MPS-3#TRPBF	LT4356MPS-3	16-Lead Plastic SO	–55°C to 125°C
LEAD BASED FINISH	**TAPE AND REEL**	**PART MARKING***	**PACKAGE DESCRIPTION**	**TEMPERATURE RANGE**
LT4356CDE-3	LT4356CDE-3#TR	43563	12-Lead (4mm × 3mm) Plastic DFN	0°C to 70°C
LT4356IDE-3	LT4356IDE-3#TR	43563	12-Lead (4mm × 3mm) Plastic DFN	–40°C to 85°C
LT4356HDE-3	LT4356HDE-3#TR	43563	12-Lead (4mm × 3mm) Plastic DFN	–40°C to 125°C

ORDER INFORMATION

LEAD BASED FINISH	TAPE AND REEL	PART MARKING*	PACKAGE DESCRIPTION	TEMPERATURE RANGE
LT4356CMS-3	LT4356CMS-3#TR	LTFFK	10-Lead Plastic MSOP	0°C to 70°C
LT4356IMS-3	LT4356IMS-3#TR	LTFFK	10-Lead Plastic MSOP	–40°C to 85°C
LT4356HMS-3	LT4356HMS-3#TR	LTFFK	10-Lead Plastic MSOP	–40°C to 125°C
LT4356MPMS-3	LT4356MPMS-3#TR	LTGGZ	10-Lead Plastic MSOP	–55°C to 125°C
LT4356CS-3	LT4356CS-3#TR	LT4356S-3	16-Lead Plastic SO	0°C to 70°C
LT4356IS-3	LT4356IS-3#TR	LT4356S-3	16-Lead Plastic SO	–40°C to 85°C
LT4356HS-3	LT4356HS-3#TR	LT4356S-3	16-Lead Plastic SO	–40°C to 125°C
LT4356MPS-3	LT4356MPS-3#TR	LT4356MPS-3	16-Lead Plastic SO	–55°C to 125°C

Consult LTC Marketing for parts specified with wider operating temperature ranges. *The temperature grade is identified by a label on the shipping container.
For more information on lead free part marking, go to: http://www.linear.com/leadfree/
For more information on tape and reel specifications, go to: http://www.linear.com/tapeandreel/

ELECTRICAL CHARACTERISTICS

The ● denotes the specifications which apply over the full operating temperature range, otherwise specifications are at T_A = 25°C. V_{CC} = 12V unless otherwise noted.

SYMBOL	PARAMETER	CONDITIONS		MIN	TYP	MAX	UNITS
V_{CC}	Operating Voltage Range		●	4		80	V
I_{CC}	V_{CC} Supply Current	$V_{\overline{SHDN}}$ = Float	●		1	1.5	mA
		$V_{\overline{SHDN}}$ = 0V, IN^+ = 1.3V			7	25	µA
		LT4356C, LT4356I	●		7	30	µA
		LT4356H, LT4356MP	●		7	40	µA
I_R	Reverse Input Current	V_{SNS} = V_{CC} = –30V, $\overline{SHDN}$ Open	●		0.3	1	mA
		V_{SNS} = V_{CC} = $V_{\overline{SHDN}}$ = –30V	●		0.8	2	mA
ΔV_{GATE}	GATE Pin Output High Voltage	V_{CC} = 4V; (V_{GATE} – V_{OUT})	●	4.5		8	V
		80V ≥ V_{CC} ≥ 8V; (V_{GATE} – V_{OUT})	●	10		16	V
$I_{GATE(UP)}$	GATE Pin Pull-Up Current	V_{GATE} = 12V; V_{CC} = 12V; LT4356C, LT4356I, LT4356H	●	–4	–23	–36	µA
		V_{GATE} = 12V; V_{CC} = 12V; LT4356MP	●	–4	–23	–38	µA
		V_{GATE} = 48V; V_{CC} = 48V	●	–4.5	–30	–50	µA
$I_{GATE(DN)}$	GATE Pin Pull-Down Current	Overvoltage, V_{FB} = 1.4V, V_{GATE} = 12V	●	75	150		mA
		Overcurrent, V_{CC} – V_{SNS} = 120mV, V_{GATE} = 12V	●	4	10		mA
		Shutdown Mode, $V_{\overline{SHDN}}$ = 0V, V_{GATE} = 12V	●	1.5	5		mA
V_{FB}	FB Pin Servo Voltage	V_{GATE} = 12V, V_{OUT} = 12V; LT4356C, LT4356I	●	1.225	1.25	1.275	V
		V_{GATE} = 12V, V_{OUT} = 12V; LT4356H, LT4356MP	●	1.215	1.25	1.275	V
I_{FB}	FB Pin Input Current	V_{FB} = 1.25V	●		0.3	1	µA
ΔV_{SNS}	Overcurrent Fault Threshold	ΔV_{SNS} = (V_{CC} – V_{SNS}), V_{CC} = 12V; LT4356C, LT4356I	●	45	50	55	mV
		ΔV_{SNS} = (V_{CC} – V_{SNS}), V_{CC} = 12V; LT4356H	●	42.5	50	55	mV
		ΔV_{SNS} = (V_{CC} – V_{SNS}), V_{CC} = 12V; LT4356MP	●	42.5	50	56	mV
		ΔV_{SNS} = (V_{CC} – V_{SNS}), V_{CC} = 48V; LT4356C, LT4356I	●	46	51	56	mV
		ΔV_{SNS} = (V_{CC} – V_{SNS}), V_{CC} = 48V; LT4356H	●	43	51	56	mV
		ΔV_{SNS} = (V_{CC} – V_{SNS}), V_{CC} = 48V; LT4356MP	●	43	51	57	mV
I_{SNS}	SNS Pin Input Current	V_{SNS} = V_{CC} = 12V to 48V	●	5	10	22	µA
I_{LEAK}	$\overline{FLT}$, EN Pins Leakage Current	$\overline{FLT}$, EN = 80V	●			2.5	µA
	A_{OUT} Pin Leakage Current	A_{OUT} = 80V				4.5	µA
I_{TMR}	TMR Pin Pull-up Current	V_{TMR} = 1V, V_{FB} = 1.5V, (V_{CC} – V_{OUT}) = 0.5V	●	–1.5	–2.5	–4	µA
		V_{TMR} = 1V, V_{FB} = 1.5V, (V_{CC} – V_{OUT}) = 75V	●	–44	–50	–56	µA
		V_{TMR} = 1.3V, V_{FB} = 1.5V, (V_{CC} – V_{OUT}) = 75V	●	–3.5	–5.5	–8.5	µA
		V_{TMR} = 1V, ΔV_{SNS} = 60mV, (V_{CC} – V_{OUT}) = 0.5V	●	–2.5	–4.5	–6.5	µA
		V_{TMR} = 1V, ΔV_{SNS} = 60mV, (V_{CC} – V_{OUT}) = 80V	●	–195	–260	–325	µA
	TMR Pin Pull-down Current	V_{TMR} = 1V, V_{FB} = 1V, ΔV_{SNS} = 0V	●	1.5	2.2	2.7	µA
V_{TMR}	TMR Pin Thresholds	$\overline{FLT}$ From High to Low, V_{CC} = 5V to 80V	●	1.22	1.25	1.28	V

ELECTRICAL CHARACTERISTICS

The ● denotes the specifications which apply over the full operating temperature range, otherwise specifications are at T_A = 25°C. V_{CC} = 12V unless otherwise noted.

SYMBOL	PARAMETER	CONDITIONS		MIN	TYP	MAX	UNITS
ΔV_{TMR}	Early Warning Period	From $\overline{FLT}$ going Low to GATE going Low, V_{CC} = 5V to 80V	●	80	100	120	mV
V_{IN}^+	IN^+ Pin Threshold		●	1.22	1.25	1.28	V
I_{IN}^+	IN^+ Pin Input Current	V_{IN}^+ = 1.25V	●		0.3	1	µA
V_{OL}	$\overline{FLT}$, EN, A_{OUT} Pins Output Low	I_{SINK} = 2mA I_{SINK} = 0.1mA	● ●		2 300	8 800	V mV
I_{OUT}	OUT Pin Input Current	V_{OUT} = V_{CC} = 12V; LT4356C, LT4356I, LT4356H V_{OUT} = V_{CC} = 12V; LT4356MP V_{OUT} = V_{CC} = 12V, $V_{\overline{SHDN}}$ = 0V	● ● ●		200 200 6	300 310 14	µA µA mA
ΔV_{OUT}	OUT Pin High Threshold	ΔV_{OUT} = V_{CC} – V_{OUT}; EN From Low to High	●	0.25	0.5	0.7	V
$V_{\overline{SHDN}}$	$\overline{SHDN}$ Pin Threshold	V_{CC} = 12V to 48V	 ●	0.6 0.4	1.4	1.7 2.1	V V
$V_{\overline{SHDN}(FLT)}$	$\overline{SHDN}$ Pin Float Voltage	V_{CC} = 12V to 48V	●	0.6	1.2	2.1	V
$I_{\overline{SHDN}}$	$\overline{SHDN}$ Pin Current	$V_{\overline{SHDN}}$ = 0V	●	–1	–4	–8	µA
$t_{OFF(OC)}$	Overcurrent Turn Off Delay Time	GATE From High to Low, ΔV_{SNS} = 0 → 120mV; LT4356C, LT4356I, LT4356H LT4356MP	● ●		2 2	4 4.5	µs µs
$t_{OFF(OV)}$	Overvoltage Turn Off Delay Time	GATE From High to Low, V_{FB} = 0 → 1.5V	●		0.25	1	µs

Note 1: Stresses beyond those listed under Absolute Maximum Ratings may cause permanent damage to the device. Exposure to any Absolute Maximum Rating condition for extended periods may affect device reliability and lifetime.

Note 2: All currents into device pins are positive; all currents out of device pins are negative. All voltages are referenced to GND unless otherwise specified.

Note 3: An internal clamp limits the GATE pin to a minimum of 10V above the OUT pin. Driving this pin to voltages beyond the clamp may damage the device.

TYPICAL PERFORMANCE CHARACTERISTICS

Specifications are at V_{CC} = 12V, T_A = 25°C unless otherwise noted.

I_{CC} vs V_{CC}

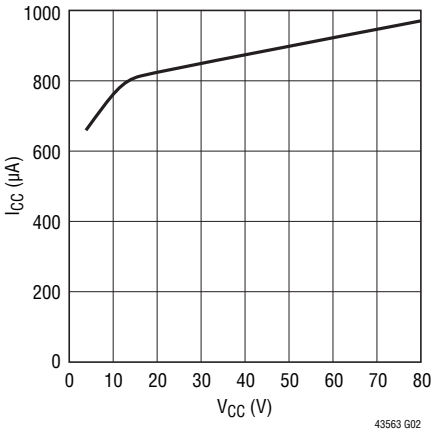

I_{CC} (Shutdown) vs V_{CC}

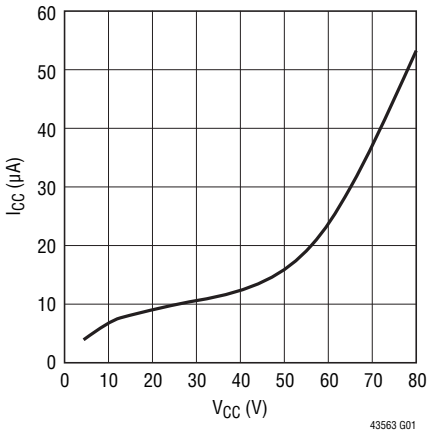

I_{CC} (Shutdown) vs Temperature

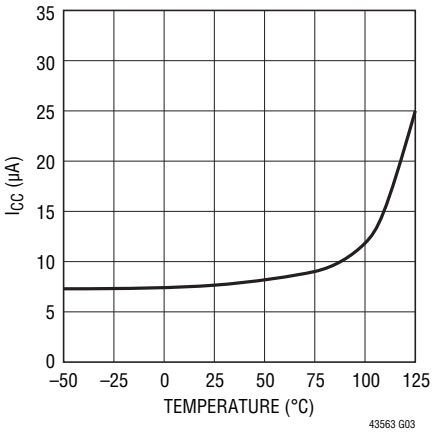

TYPICAL PERFORMANCE CHARACTERISTICS

Specifications are at V_{CC} = 12V, T_A = 25°C unless otherwise noted.

$\overline{SHDN}$ Current vs Temperature

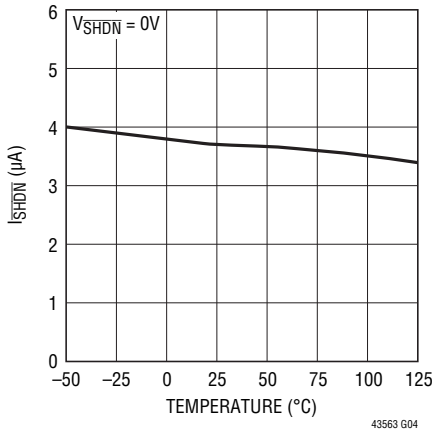

GATE Pull-Up Current vs V_{CC}

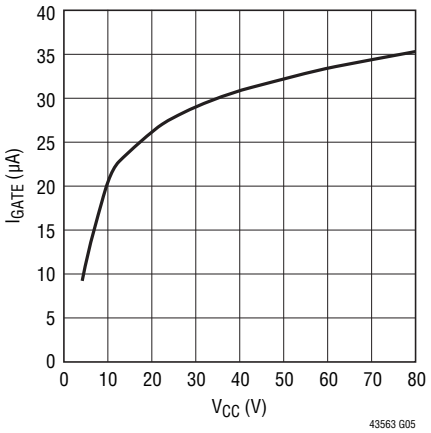

GATE Pull-Up Current vs Temperature

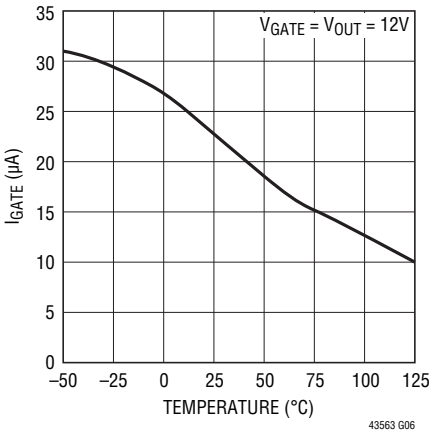

GATE Pull-Down Current vs Temperature

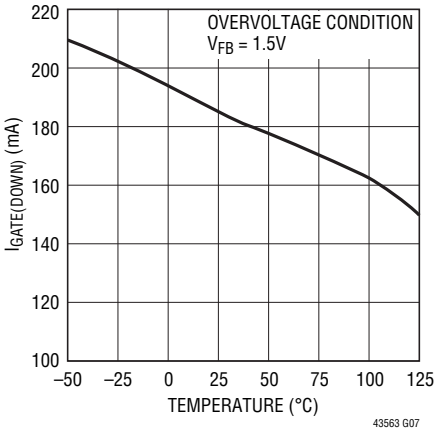

GATE Pull-Down Current vs Temperature

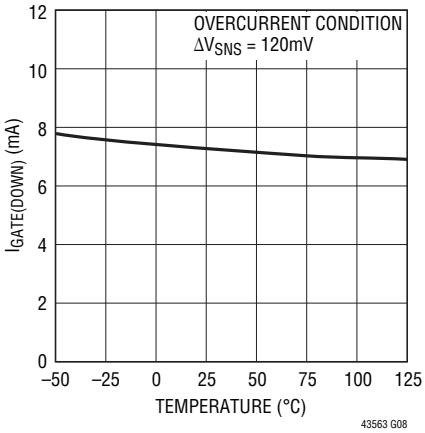

ΔV_{GATE} vs I_{GATE}

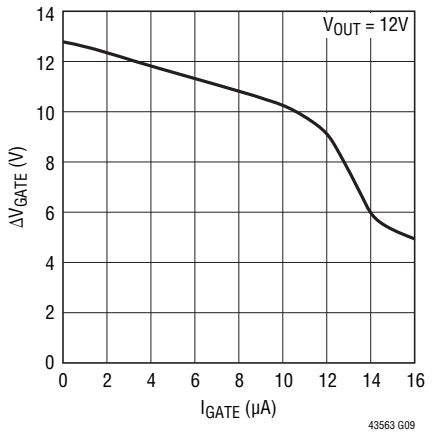

ΔV_{GATE} vs Temperature

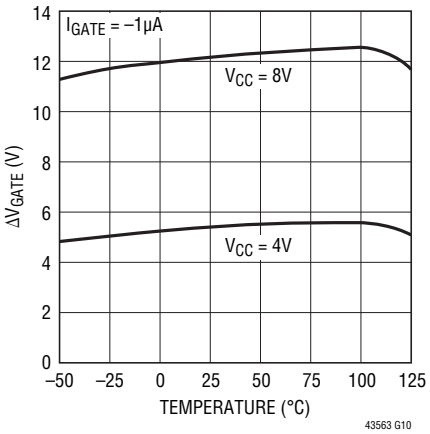

ΔV_{GATE} vs V_{CC}

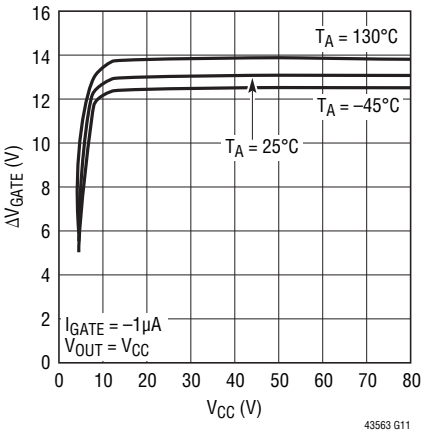

Overvoltage TMR Current vs (V_{CC} – V_{OUT})

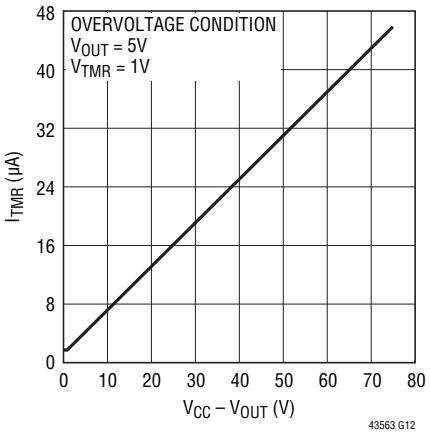

TYPICAL PERFORMANCE CHARACTERISTICS

Specifications are at V_{CC} = 12V, T_A = 25°C unless otherwise noted.

Overcurrent TMR Current vs ($V_{CC} – V_{OUT}$)

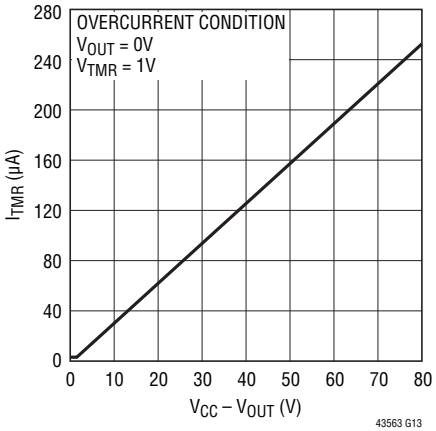

Warning Period TMR Current vs V_{CC}

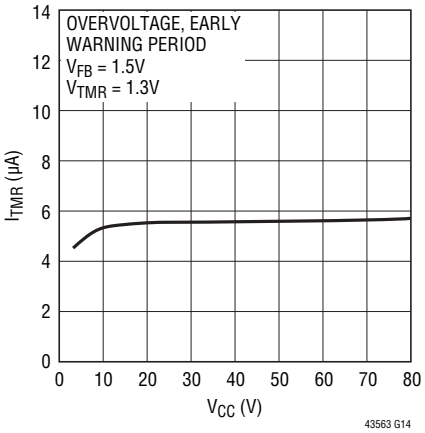

TMR Pull-Down Current vs Temperature

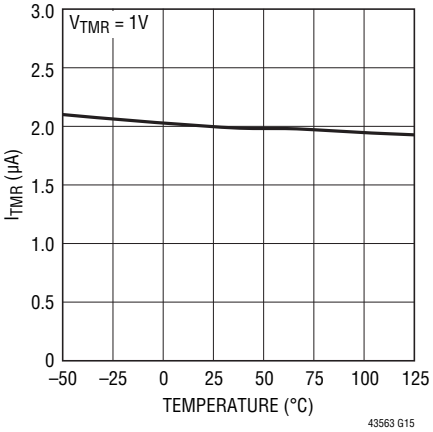

Output Low Voltage vs Current

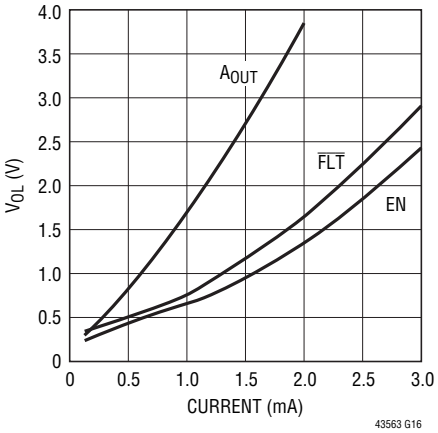

Overvoltage Turn-Off Time vs Temperature

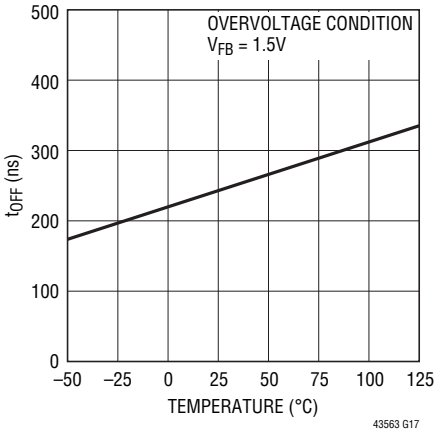

Overcurrent Turn-Off Time vs Temperature

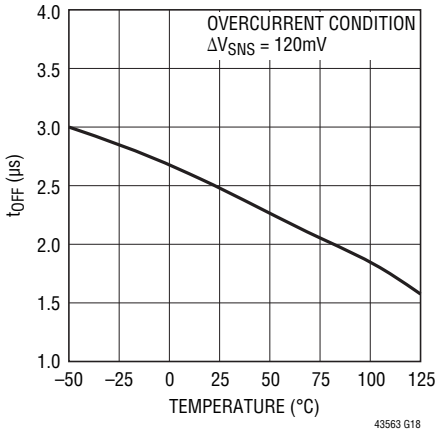

Reverse Current vs Reverse Voltage

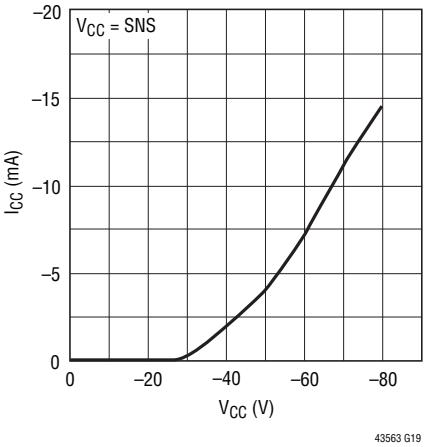

PIN FUNCTIONS

A_{OUT} (DFN and SO Packages Only): Amplifier Output. Open collector output of the auxiliary amplifier. It is capable of sinking up to 2mA from 80V. The negative input of the amplifier is internally connected to a 1.25V reference.

EN: Open-Collector Enable Output. The EN pin goes high impedance when the voltage at the OUT pin is above (V_{CC} – 0.7V), indicating the external MOSFET is fully on. The state of the pin is latched until the OUT pin voltage resets at below 0.5V and goes back up above 2V. The internal NPN is capable of sinking up to 3mA of current from 80V to drive an LED or opto-coupler.

Exposed Pad: Exposed pad may be left open or connected to device ground (GND).

FB: Voltage Regulator Feedback Input. Connect this pin to the center tap of the output resistive divider connected between the OUT pin and ground. During an overvoltage condition, the GATE pin is servoed to maintain a 1.25V threshold at the FB pin. This pin is clamped internally to 7V. Tie to GND to disable the OV clamp.

$\overline{FLT}$: Open-Collector Fault Output. This pin pulls low after the voltage at the TMR pin has reached the fault threshold of 1.25V. It indicates the pass transistor is about to turn off because either the supply voltage has stayed at an elevated level for an extended period of time (voltage fault) or the device is in an overcurrent condition (current fault). The internal NPN is capable of sinking up to 3mA of current from 80V to drive an LED or opto-coupler.

GATE: N-Channel MOSFET Gate Drive Output. The GATE pin is pulled up by an internal charge pump current source and clamped to 14V above the OUT pin. Both voltage and current amplifiers control the GATE pin to regulate the output voltage and limit the current through the MOSFET.

GND: Device Ground.

IN^+ (DFN and SO Packages Only): Positive Input of the Auxiliary Amplifier. This amplifier can be used as a level detection comparator with external hysteresis or linear regulator controlling an external PNP transistor. This pin is clamped internally to 7V. Connect to ground if unused.

OUT: Output Voltage Sense Input. This pin senses the voltage at the source of the N-channel MOSFET and sets the fault timer current. When the OUT pin voltage reaches 0.7V away from V_{CC}, the EN pin goes high impedance.

$\overline{SHDN}$: Shutdown Control Input. The LT4356-3 can be shut down to a low current mode by pulling the $\overline{SHDN}$ pin below the shutdown threshold of 0.4V. All functions, including the spare amplifier, are turned off. Pull this pin above 1.7V or disconnect it and allow the internal current source to turn the part back on. After GATE pin pulls low due to fault time out, the part can be restarted by pulling the $\overline{SHDN}$ pin low for at least 100µs and pulled high with a slew rate faster than 10V/ms. The leakage current to ground at the pin should be limited to no more than 1µA if no pull up device is used to turn the part on. The $\overline{SHDN}$ pin can be pulled up to 100V or below GND by 60V without damage.

SNS: Current Sense Input. Connect this pin to the output of the current sense resistor. The current limit circuit controls the GATE pin to limit the sense voltage between V_{CC} and SNS pins to 50mV. At the same time the sense amplifier also starts a current source to charge up the TMR pin. This pin can be pulled below GND by up to 60V, though the voltage difference with the V_{CC} pin must be limited to less than 30V. Connect to V_{CC} if unused.

TMR: Fault Timer Input. Connect a capacitor between this pin and ground to set the times for early warning and fault periods. The current charging up this pin during fault conditions depends on the voltage difference between the V_{CC} and OUT pins. When V_{TMR} reaches 1.25V, the $\overline{FLT}$ pin pulls low to indicate the detection of a fault condition. If the condition persists, the pass transistor turns off when V_{TMR} reaches the threshold of 1.35V. The GATE pin remains low even after the fault condition has disappeared and the voltage at the TMR pin has reached 0.5V.

V_{CC}: Positive Supply Voltage Input. The positive supply input ranges from 4V to 80V for normal operation. It can also be pulled below ground potential by up to 60V during a reverse battery condition, without damaging the part. The supply current is reduced to 7µA with all the functional blocks off.

BLOCK DIAGRAM

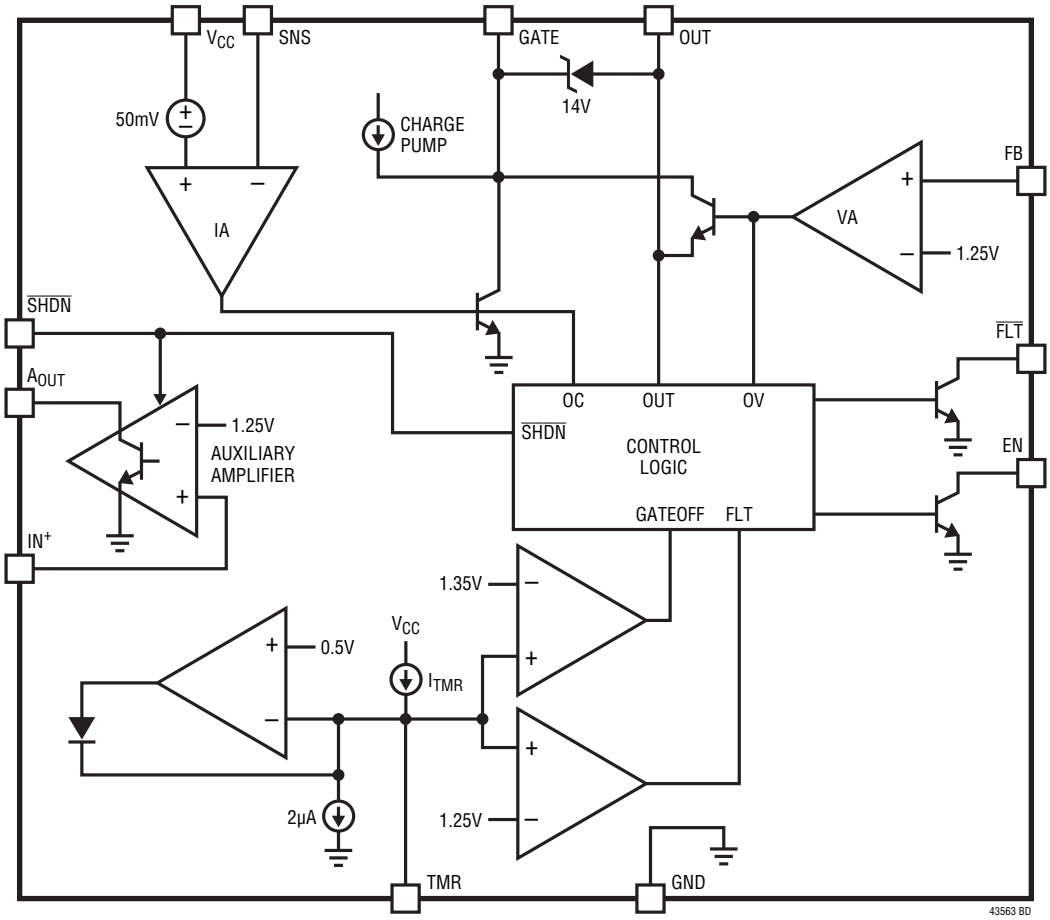

OPERATION

Some power systems must cope with high voltage surges of short duration such as those in automobiles. Load circuitry must be protected from these transients, yet high availability systems must continue operating during these events.

The LT4356-3 is an overvoltage protection regulator that drives an external N-channel MOSFET as the pass transistor. It operates from a wide supply voltage range of 4V to 80V. It can also be pulled below ground potential by up to 60V without damage. The low power supply requirement of 4V allows it to operate even during cold cranking conditions in automotive applications. The internal charge pump turns on the N-channel MOSFET to supply current to the loads with very little power loss. Two MOSFETs can be connected back to back to replace an inline Schottky diode for reverse input protection. This improves the efficiency and increases the available supply voltage level to the load circuitry during cold crank.

Normally, the pass transistor is fully on, powering the loads with very little voltage drop. When the supply voltage surges too high, the voltage amplifier (VA) controls the gate of the MOSFET and regulates the voltage at the source pin to a level that is set by the external resistive divider from the OUT pin to ground and the internal 1.25V reference. A current source starts charging up the capacitor connected at the TMR pin to ground. If the voltage at the TMR pin, V_{TMR}, reaches 1.25V, the $\overline{FLT}$ pin pulls low to indicate impending turn-off due to the overvoltage condition. The pass transistor stays on until the TMR pin reaches 1.35V, at which point the GATE pin pulls low turning off the MOSFET.

The potential at the TMR pin starts decreasing as soon as the overvoltage condition disappears, but the GATE pin remains low even when the voltage at the TMR pin reaches 0.5V. Pulling the $\overline{SHDN}$ pin low momentarily will turn the GATE pin back on.

The fault timer allows the load to continue functioning during short transient events while protecting the MOSFET from being damaged by a long period of supply overvoltage, such as a load dump in automobiles. The timer period varies with the voltage across the MOSFET. A higher voltage corresponds to a shorter fault timer period, ensuring the MOSFET operates within its safe operating area (SOA).

The LT4356-3 senses an overcurrent condition by monitoring the voltage across an optional sense resistor placed between the V_{CC} and SNS pins. An active current limit circuit (IA) controls the GATE pin to limit the sense voltage to 50mV. A current is also generated to start charging up the TMR pin. This current is about 5 times the current generated during an overvoltage event. The $\overline{FLT}$ pin pulls low when the voltage at the TMR pin reaches 1.25V and the MOSFET is turned off when it reaches 1.35V.

An auxiliary amplifier is provided with the negative input connected to an internal 1.25V reference. The output pull down device is capable of sinking up to 2mA of current allowing it to drive an LED or opto coupler. This amplifier can be configured as a linear regulator controller driving an external PNP transistor or a comparator function to monitor voltages.

The $\overline{SHDN}$ pin turns off the pass transistor and reduces the supply current to less than 7μA.

APPLICATIONS INFORMATION

The LT4356-3 can limit the voltage and current to the load circuitry during supply transients or overcurrent events. The total fault timer period should be set to ride through short overvoltage transients while not causing damage to the pass transistor. The selection of this N-channel MOSFET pass transistor is critical for this application. It must stay on and provide a low impedance path from the input supply to the load during normal operation and then dissipate power during overvoltage or overcurrent conditions.

The following sections describe the overcurrent and the overvoltage faults, and the selection of the timer capacitor value based on the required warning time. The selection of the N-channel MOSFET pass transistor is discussed next. Auxiliary amplifier, reverse input, and the shutdown functions are covered after the MOSFET selection. External component selection is discussed in detail in the Design Example section.

Overvoltage Fault

The LT4356-3 limits the voltage at the OUT pin during an overvoltage situation. An internal voltage amplifier regulates the GATE pin voltage to maintain a 1.25V threshold at the FB pin. During this period of time, the power MOSFET is still on and continues to supply current to the load. This allows uninterrupted operation during short overvoltage transient events.

When the voltage regulation loop is engaged for longer than the time-out period, set by the timer capacitor connected from the TMR pin to ground, an overvoltage fault is detected. The GATE pin is pulled down to the OUT pin by a 150mA current. This prevents the power MOSFET from being damaged during a long period of overvoltage, such as during load dump in automobiles. Pulling the $\overline{SHDN}$ pin low for at least 100µs and pulled high with a slew rate faster than 10V/ms will allow the GATE pin to pull back up.

Overcurrent Fault

The LT4356-3 features an adjustable current limit that protects against short circuits or excessive load current. During an overcurrent event, the GATE pin is regulated to limit the current sense voltage across the V_{CC} and SNS pins to 50mV.

An overcurrent fault occurs when the current limit circuitry has been engaged for longer than the time-out delay set by the timer capacitor. The GATE pin is then immediately pulled low by a 10mA current to GND turning off the MOSFET. The GATE pin stays low until the $\overline{SHDN}$ pin is pulled low for at least 100µs and pulled high with a slew rate faster than 10V/ms.

Fault Timer

The LT4356-3 includes an adjustable fault timer pin. Connecting a capacitor from the TMR pin to ground sets the delay timer period before the MOSFET is turned off. The same capacitor also sets the cool down period before the MOSFET is allowed to turn back on after the fault condition has disappeared.

Once a fault condition, either overvoltage or overcurrent, is detected, a current source charges up the TMR pin. The current level varies depending on the voltage drop across the drain and source terminals of the power MOSFET(V_{DS}), which is typically from the V_{CC} pin to the OUT pin. This scheme takes better advantage of the available Safe Operating Area (SOA) of the MOSFET than would a fixed timer current. The timer function operates down to V_{CC} = 5V across the whole temperature range.

APPLICATIONS INFORMATION

Fault Timer Current

The timer current starts at around 2μA with 0.5V or less of V_{DS}, increasing linearly to 50μA with 75V of V_{DS} during an overvoltage fault (Figure 1). During an overcurrent fault, it starts at 4μA with 0.5V or less of V_{DS} but increases to 260μA with 80V across the MOSFET (Figure 2). This arrangement allows the pass transistor to turn off faster during an overcurrent event, since more power is dissipated during this condition. Refer to the Typical Performance Characteristics section for the timer current at different V_{DS} in both overvoltage and overcurrent events.

When the voltage at the TMR pin, V_{TMR}, reaches the 1.25V threshold, the $\overline{FLT}$ pin pulls low to indicate the detection of a fault condition and provide warning to the load of the impending power loss. In the case of an overvoltage fault, the timer current then switches to a fixed 5μA. The interval between $\overline{FLT}$ asserting low and the MOSFET turning off is given by:

$$t_{WARNING} = \frac{C_{TMR} \bullet 100mV}{5\mu A}$$

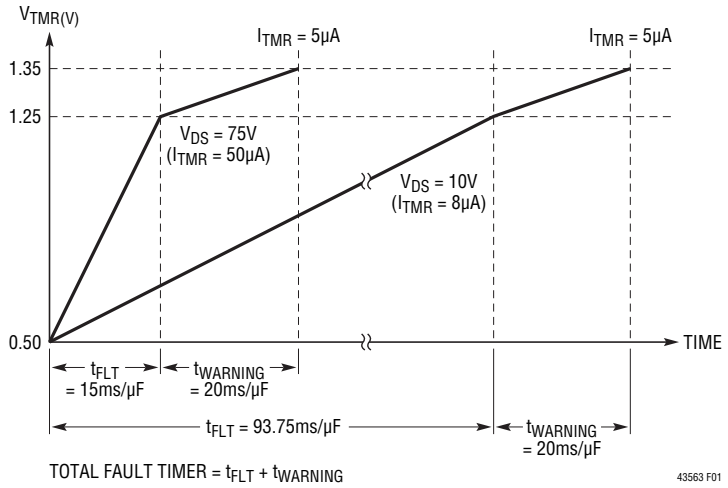

Figure 1. Overvoltage Fault Timer Current

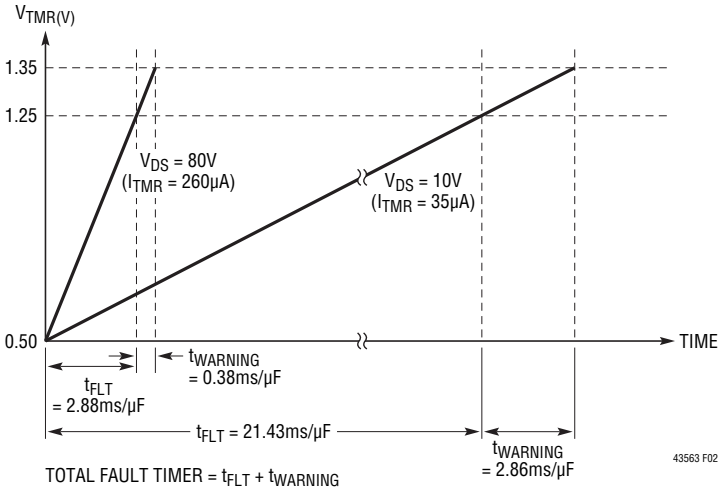

Figure 2. Overcurrent Fault Timer Current

APPLICATIONS INFORMATION

This fixed early warning period allows time for the system to perform necessary backup or house-keeping functions before power is cut off. When V_{TMR} crosses the 1.35V threshold, the GATE pin pulls low immediately and turns off the MOSFET. Note that during an overcurrent event the timer current is not reduced to 5µA when V_{TMR} reaches 1.25V, since it would lengthen the overall fault timer period and cause additional MOSFET stress. After the GATE pin pulls low due to a fault time out, the LT4356-3 latches off. Allow sufficient time for the TMR pin to discharge to 0.5V (typical discharge current is 2.2µA) and for the MOSFET to cool before attempting to reset the part. To reset, pull the $\overline{SHDN}$ pin low for at least 100µs, then pull high with a slew rate of at least 10V/ms.

MOSFET Selection

The LT4356-3 drives an N-channel MOSFET to conduct the load current. The important features of the MOSFET are on-resistance $R_{DS(ON)}$, the maximum drain-source voltage $V_{(BR)DSS}$, the threshold voltage, and the SOA.

The maximum allowable drain-source voltage must be higher than the supply voltage. If the output is shorted to ground or during an overvoltage event, the full supply voltage will appear across the MOSFET.

The gate drive for the MOSFET is guaranteed to be more than 10V and less than 16V for those applications with V_{CC} higher than 8V. This allows the use of standard threshold voltage N-channel MOSFETs. For systems with V_{CC} less than 8V, a logic level MOSFET is required since the gate drive can be as low as 4.5V.

The SOA of the MOSFET must encompass all fault conditions. In normal operation the pass transistor is fully on, dissipating very little power. But during either overvoltage or overcurrent faults, the GATE pin is servoed to regulate either the output voltage or the current through the MOSFET. Large current and high voltage drop across the MOSFET can coexist in these cases. The SOA curves of the MOSFET must be considered carefully along with the selection of the fault timer capacitor.

Transient Stress in the MOSFET

During an overvoltage event, the LT4356-3 drives a series pass MOSFET to regulate the output voltage at an acceptable level. The load circuitry may continue operating throughout this interval, but only at the expense of dissipation in the MOSFET pass device. MOSFET dissipation or stress is a function of the input voltage waveform, regulation voltage and load current. The MOSFET must be sized to survive this stress.

Most transient event specifications use the model shown in Figure 3. The idealized waveform comprises a linear ramp of rise time t_r, reaching a peak voltage of V_{PK} and exponentially decaying back to V_{IN} with a time constant of t. A common automotive transient specification has constants of t_r = 10µs, V_{PK} = 80V and τ = 1ms. A surge condition known as "load dump" has constants of t_r = 5ms, V_{PK} = 60V and τ = 200ms.

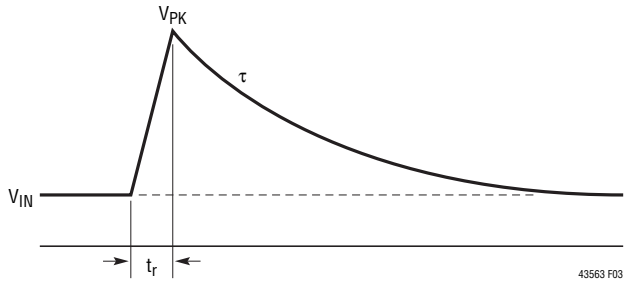

Figure 3. Prototypical Transient Waveform

APPLICATIONS INFORMATION

MOSFET stress is the result of power dissipated within the device. For long duration surges of 100ms or more, stress is increasingly dominated by heat transfer; this is a matter of device packaging and mounting, and heat sink thermal mass. This is analyzed by simulation, using the MOSFET thermal model.

For short duration transients of less than 100ms, MOSFET survival is increasingly a matter of safe operating area (SOA), an intrinsic property of the MOSFET. SOA quantifies the time required at any given condition of V_{DS} and I_D to raise the junction temperature of the MOSFET to its rated maximum. MOSFET SOA is expressed in units of watt-squared-seconds (P^2t). This figure is essentially constant for intervals of less than 100ms for any given device type, and rises to infinity under DC operating conditions. Destruction mechanisms other than bulk die temperature distort the lines of an accurately drawn SOA graph so that P^2t is not the same for all combinations of I_D and V_{DS}. In particular P^2t tends to degrade as V_{DS} approaches the maximum rating, rendering some devices useless for absorbing energy above a certain voltage.

Calculating Transient Stress

To select a MOSFET suitable for any given application, the SOA stress must be calculated for each input transient which shall not interrupt operation. It is then a simple matter to chose a device which has adequate SOA to survive the maximum calculated stress. P^2t for a prototypical transient waveform is calculated as follows (Figure 4).

Let

$a = V_{REG} - V_{IN}$
$b = V_{PK} - V_{IN}$
(V_{IN} = Nominal Input Voltage)

Then

$$P^2t = I_{LOAD}^2 \left[\frac{1}{3} t_r \frac{(b-a)^3}{b} + \frac{1}{2}\tau\left(2a^2 \ln\frac{b}{a} + 3a^2 + b^2 - 4ab\right)\right]$$

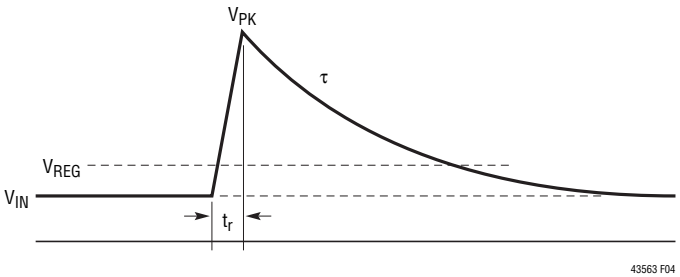

Figure 4. Safe Operating Area Required to Survive Prototypical Transient Waveform

Typically $V_{REG} \approx V_{IN}$ and $\tau \gg t_r$ simplifying the above to

$$P^2t = \frac{1}{2} I_{LOAD}^2 (V_{PK} - V_{REG})^2 \tau \qquad (W^2s)$$

For the transient conditions of V_{PK} = 80V, V_{IN} = 12V, V_{REG} = 16V, t_r = 10µs and τ = 1ms, and a load current of 3A, P^2t is 18.4W^2s—easily handled by a MOSFET in a D-pak package. The P^2t of other transient waveshapes is evaluated by integrating the square of MOSFET power versus time.

Calculating Short-Circuit Stress

SOA stress must also be calculated for short-circuit conditions. Short-circuit P^2t is given by:

$$P^2t = (V_{IN} \bullet \Delta V_{SNS}/R_{SNS})^2 \bullet t_{TMR} \qquad (W^2s)$$

where, ΔV_{SNS} is the SENSE pin threshold, and t_{TMR} is the overcurrent timer interval.

For V_{IN} = 14.7V, V_{SNS} = 50mV, R_{SNS} = 12mΩ and C_{TMR} = 100nF, P^2t is 6.6W^2s—less than the transient SOA calculated in the previous example. Nevertheless, to account for circuit tolerances this figure should be doubled to 13.2W^2s.

Limiting Inrush Current and GATE Pin Compensation

The LT4356-3 limits the inrush current to any load capacitance by controlling the GATE pin voltage slew rate. An external capacitor can be connected from GATE to ground to slow down the inrush current further at the expense of slower turn-off time. The gate capacitor is set at:

$$C1 = \frac{I_{GATE(UP)}}{I_{INRUSH}} \bullet C_L$$

APPLICATIONS INFORMATION

The LT4356-3 does not need extra compensation components at the GATE pin for stability during an overvoltage or overcurrent event. However, with fast, high voltage transient steps at the input, a gate capacitor, C1, to ground is needed to prevent turn-on of the N-channel MOSFET.

The extra gate capacitance slows down the turn off time during fault conditions and may allow excessive current during an output short event. An extra resistor, R1, in series with the gate capacitor can improve the turn off time. A diode, D1, should be placed across R1 with the cathode connected to C1 as shown in Figure 5.

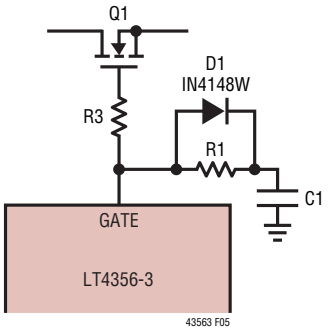

Figure 5

Auxiliary Amplifier

An uncommitted amplifier is included in the LT4356-3 to provide flexibility in the system design. With the negative input connected internally to the 1.25V reference, the amplifier can be connected as a level detect comparator with external hysteresis. The open collector output pin, A_{OUT}, is capable of driving an opto or LED. It can also interface with the system via a pull-up resistor to a supply voltage up to 80V.

The amplifier can also be configured as a low dropout linear regulator controller. With an external PNP transistor, such as 2N2905A, it can supply up to 100mA of current with only a few hundred mV of dropout voltage. Current limit can be easily included by adding two diodes and one resistor (Figure 6). The amplifier is turned off when the LT4356-3 is shut down.

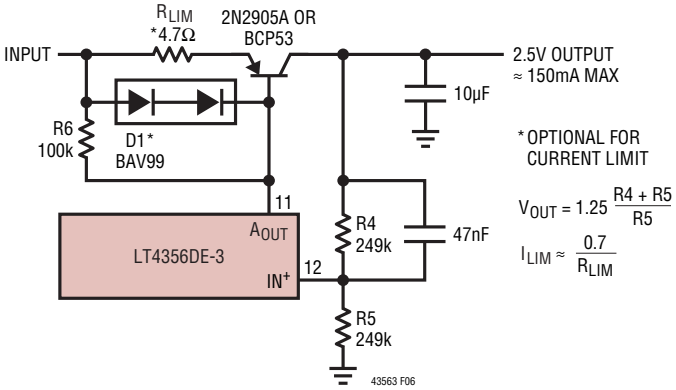

Figure 6. Auxiliary LDO Output with Optional Current Limit

Reverse Input Protection

A blocking diode is commonly employed when reverse input potential is possible, such as in automotive applications. This diode causes extra power loss, generates heat, and reduces the available supply voltage range. During cold crank, the extra voltage drop across the diode is particularly undesirable.

The LT4356-3 is designed to withstand reverse voltage without damage to itself or the load. The V_{CC}, SNS, and $\overline{SHDN}$ pins can withstand up to 60V of DC voltage below the GND potential. Back-to-back MOSFETs must be used to eliminate the current path through their body diodes (Figure 7). Figure 8 shows the approach with a P-Channel MOSFET in place of Q2.

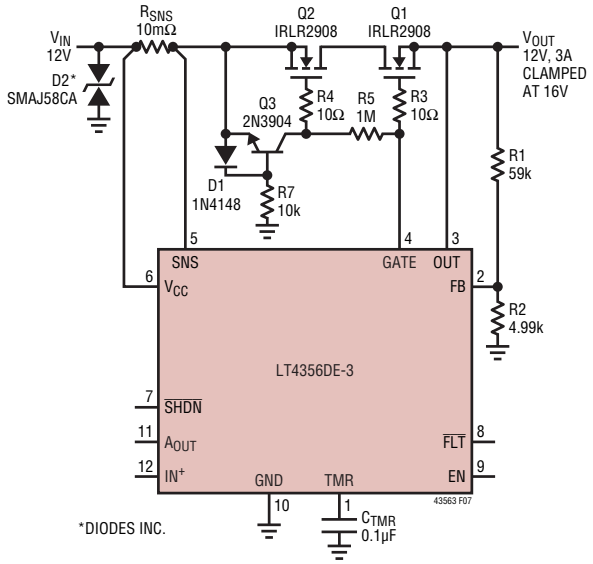

Figure 7. Overvoltage Regulator with N-channel MOSFET Reverse Input Protection

APPLICATIONS INFORMATION

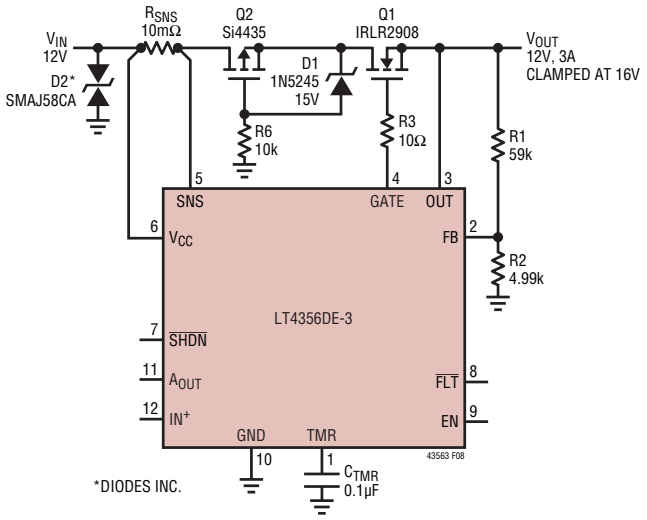

Figure 8. Overvoltage Regulator with P-Channel MOSFET Reverse Input Protection

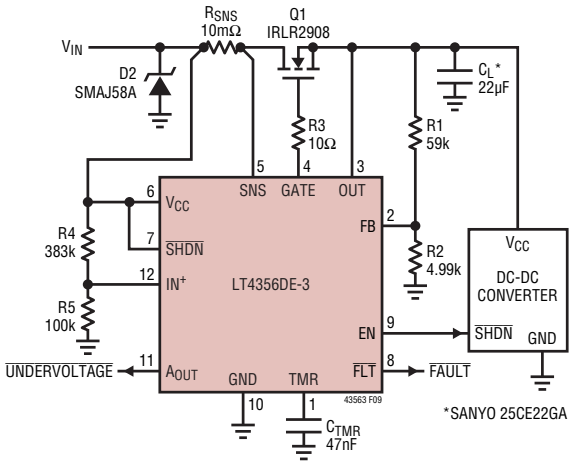

Figure 9. Overvoltage Regulator with Low-Battery Detection

Shutdown

The LT4356-3 can be shut down to a low current mode when the voltage at the $\overline{SHDN}$ pin goes below the shutdown threshold of 0.6V. The quiescent current drops to 7µA. All functions are turned off including the auxiliary amplifier.

After the GATE pin pulls low due to a fault time out, the LT4356-3 latches off. Allow sufficient time for the TMR pin to discharge to 0.5V (typical discharge current is 2.2µA) and for the MOSFET to cool before attempting to reset the part. To reset, pull the $\overline{SHDN}$ pin low for at least 100µs, then pull high with a slew rate of at least 10V/ms.

The $\overline{SHDN}$ pin can be pulled up to V_{CC} or below GND by up to 60V without damaging the pin. Leaving the pin open allows an internal current source to pull it up and turn on the part while clamping the pin to 2.5V. The leakage current at the pin should be limited to no more than 1µA if no pull up device is used to help turn it on.

Supply Transient Protection

The LT4356-3 is 100% tested and guaranteed to be safe from damage with supply voltages up to 80V. Nevertheless, voltage transients above 100V may cause permanent damage. During a short-circuit condition, the large change in current flowing through power supply traces and associated wiring can cause inductive voltage transients which could exceed 100V. To minimize the voltage transients, the power trace parasitic inductance should be minimized by using wide traces. A small surge suppressor, D2, in Figure 9, at the input will clamp the voltage spikes.

A total bulk capacitance of at least 22µF low ESR is required close to the source pin of MOSFET Q1. In addition, the bulk capacitance should be at least 10 times larger than the total ceramic bypassing capacitor on the input of the DC/DC converter.

Layout Considerations

To achieve accurate current sensing, Kelvin connection to the current sense resistor (R_{SNS} in Figure 9) is recommended. The minimum trace width for 1oz copper foil is 0.02" per amp to ensure the trace stays at a reasonable temperature. 0.03" per amp or wider is recommended. Note that 1oz copper exhibits a sheet resistance of about 530µΩ/square. Small resistances can cause large errors in high current applications. Noise immunity will be improved significantly by locating resistive dividers close to the pins with short V_{CC} and GND traces.

Design Example

As a design example, take an application with the following specifications: V_{CC} = 8V to 14V DC with transient up to 80V, $V_{OUT} \leq$ 16V, current limit (I_{LIM}) at 5A, low battery detection at 6V, and 1ms of overvoltage early warning (Figure 9).

APPLICATIONS INFORMATION

First, calculate the resistive divider value to limit V_{OUT} to 16V during an overvoltage event:

$$V_{REG} = \frac{1.25V \bullet (R1 + R2)}{R2} = 16V$$

Set the current through R1 and R2 during the overvoltage condition to 250µA.

$$R2 = \frac{1.25V}{250\mu A} = 5k\Omega$$

Choose 4.99kΩ for R2.

$$R1 = \frac{(16V - 1.25V) \bullet R2}{1.25V} = 58.88k\Omega$$

The closest standard value for R1 is 59kΩ.

Next calculate the sense resistor, R_{SNS}, value:

$$R_{SNS} = \frac{50mV}{I_{LIM}} = \frac{50mV}{5A} = 10m\Omega$$

C_{TMR} is then chosen for 1ms of early warning time:

$$C_{TMR} = \frac{1ms \bullet 5\mu A}{100mV} = 50nF$$

The closest standard value for C_{TMR} is 47nF.

Finally, calculate R4 and R5 for the 6V low battery threshold detection:

$$6V = \frac{1.25V \bullet (R4 + R5)}{R5}$$

Choose 100kΩ for R5.

$$R4 = \frac{(6V - 1.25V) \bullet R5}{1.25V} = 380k\Omega$$

Select 383kΩ for R4.

The pass transistor, Q1, should be chosen to withstand the output short condition with V_{CC} = 14V.

The total overcurrent fault time is:

$$t_{OC} = \frac{47nF \bullet 0.85V}{45.5\mu A} = 0.878ms$$

The power dissipation on Q1 equals to:

$$P = \frac{14V \bullet 50mV}{10m\Omega} = 70W$$

These conditions are well within the Safe Operating Area of IRLR2908.

TYPICAL APPLICATIONS

Wide Input Range 5V to 28V Hot Swap with Undervoltage Lockout

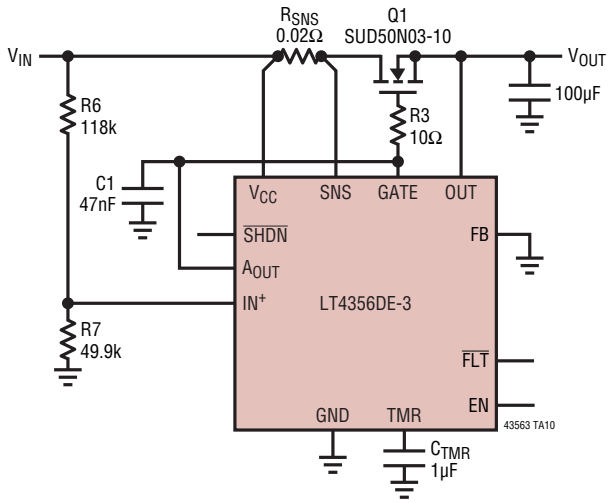

24V Overvoltage Regulator Withstands 150V at V_{IN}

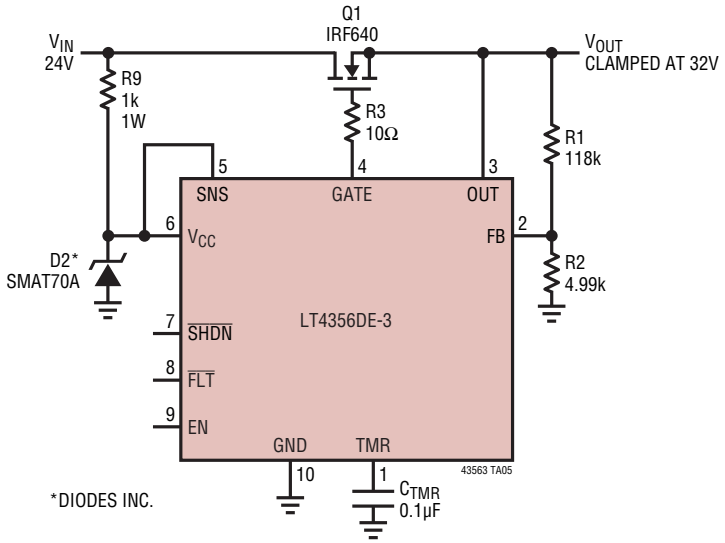

TYPICAL APPLICATIONS

Overvoltage Regulator with Low Battery Detection and Output Keep Alive During Shutdown

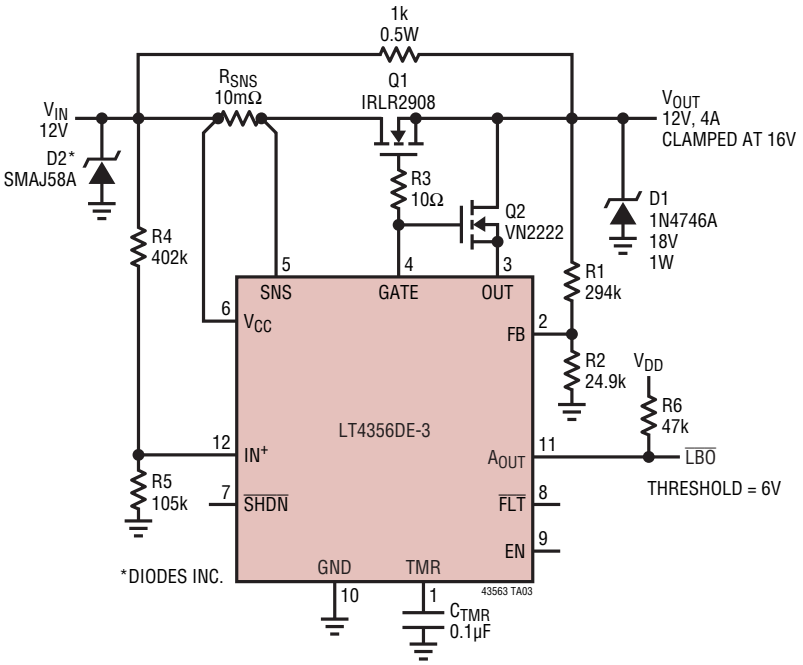

2.5A, 48V Hot Swap with Overvoltage Output Regulation at 72V and UV Shutdown at 35V

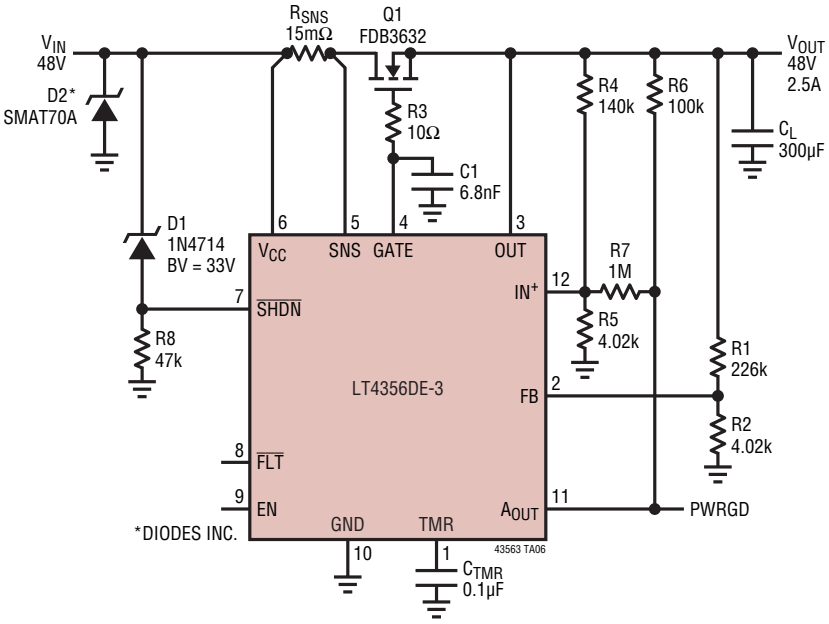

TYPICAL APPLICATIONS

2.5A, 28V Hot Swap with Overvoltage Output Regulation at 36V and UV Shutdown at 15V

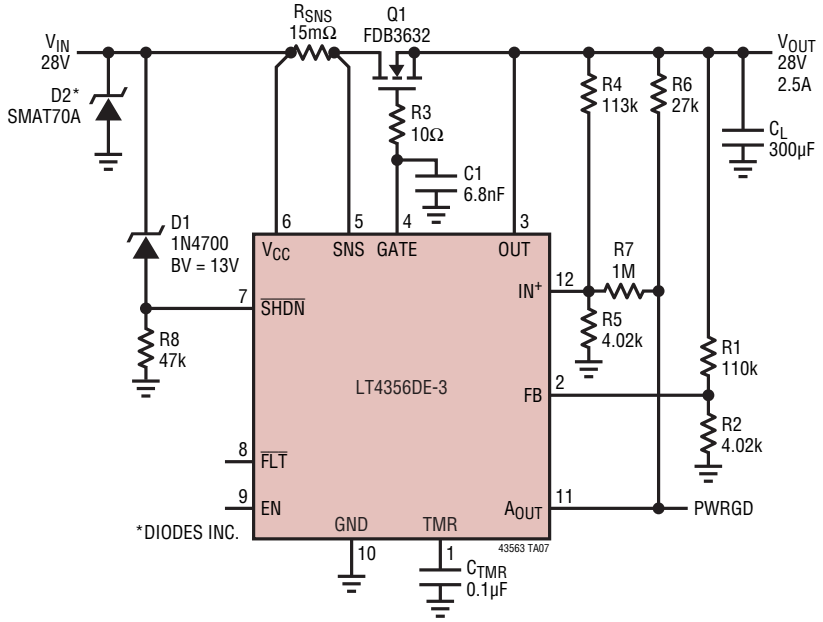

Overvoltage Regulator with Reverse Input Protection Up to –80V

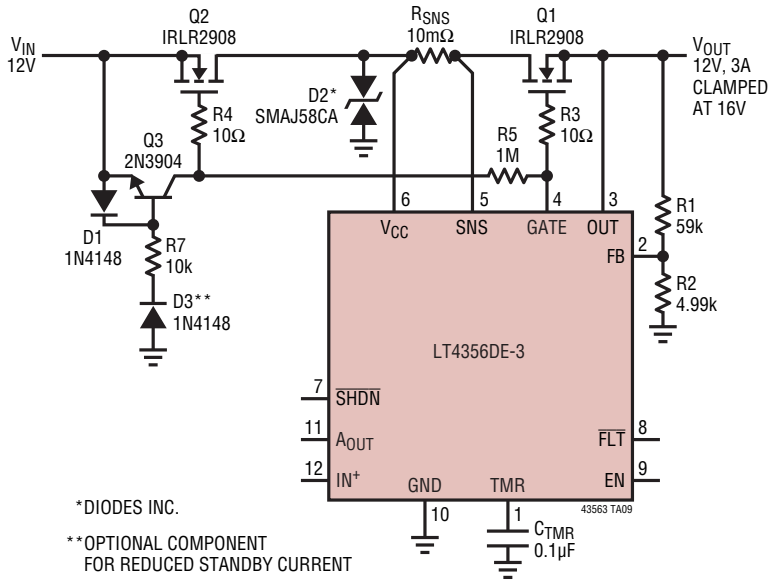

PACKAGE DESCRIPTION

Please refer to http://www.linear.com/designtools/packaging/ for the most recent package drawings.

DE/UE Package
12-Lead Plastic DFN (4mm × 3mm)
(Reference LTC DWG # 05-08-1695 Rev D)

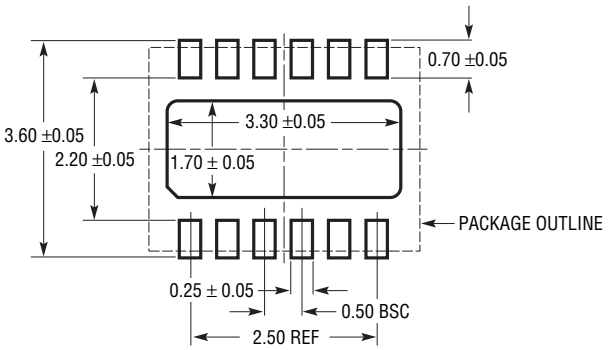

RECOMMENDED SOLDER PAD PITCH AND DIMENSIONS
APPLY SOLDER MASK TO AREAS THAT ARE NOT SOLDERED

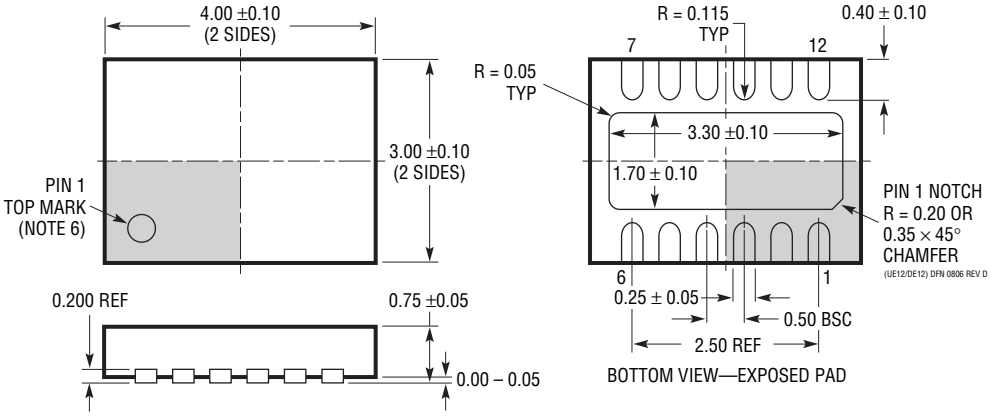

NOTE:
1. DRAWING PROPOSED TO BE A VARIATION OF VERSION (WGED) IN JEDEC PACKAGE OUTLINE M0-229
2. DRAWING NOT TO SCALE
3. ALL DIMENSIONS ARE IN MILLIMETERS
4. DIMENSIONS OF EXPOSED PAD ON BOTTOM OF PACKAGE DO NOT INCLUDE MOLD FLASH. MOLD FLASH, IF PRESENT, SHALL NOT EXCEED 0.15mm ON ANY SIDE
5. EXPOSED PAD SHALL BE SOLDER PLATED
6. SHADED AREA IS ONLY A REFERENCE FOR PIN 1 LOCATION ON THE TOP AND BOTTOM OF PACKAGE

PACKAGE DESCRIPTION

Please refer to http://www.linear.com/designtools/packaging/ for the most recent package drawings.

MS Package
10-Lead Plastic MSOP
(Reference LTC DWG # 05-08-1661)

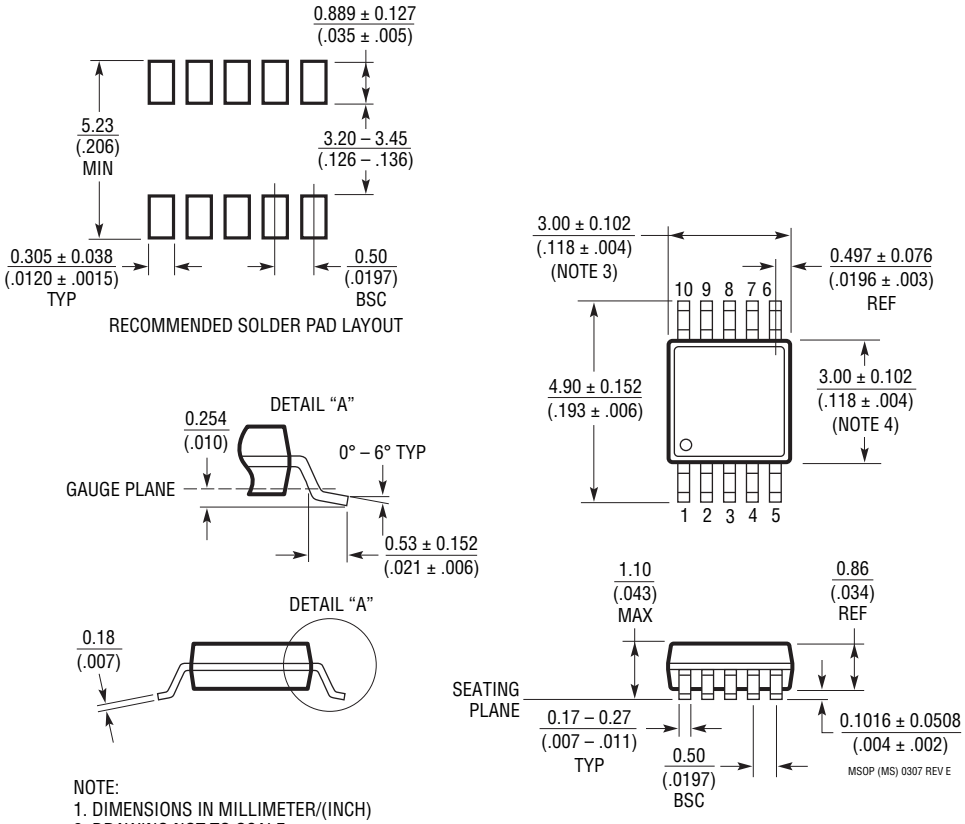

NOTE:
1. DIMENSIONS IN MILLIMETER/(INCH)
2. DRAWING NOT TO SCALE
3. DIMENSION DOES NOT INCLUDE MOLD FLASH, PROTRUSIONS OR GATE BURRS.
   MOLD FLASH, PROTRUSIONS OR GATE BURRS SHALL NOT EXCEED 0.152mm (.006") PER SIDE
4. DIMENSION DOES NOT INCLUDE INTERLEAD FLASH OR PROTRUSIONS.
   INTERLEAD FLASH OR PROTRUSIONS SHALL NOT EXCEED 0.152mm (.006") PER SIDE
5. LEAD COPLANARITY (BOTTOM OF LEADS AFTER FORMING) SHALL BE 0.102mm (.004") MAX

PACKAGE DESCRIPTION

Please refer to http://www.linear.com/designtools/packaging/ for the most recent package drawings.

S Package
16-Lead Plastic Small Outline (Narrow .150 Inch)
(Reference LTC DWG # 05-08-1610 Rev G)

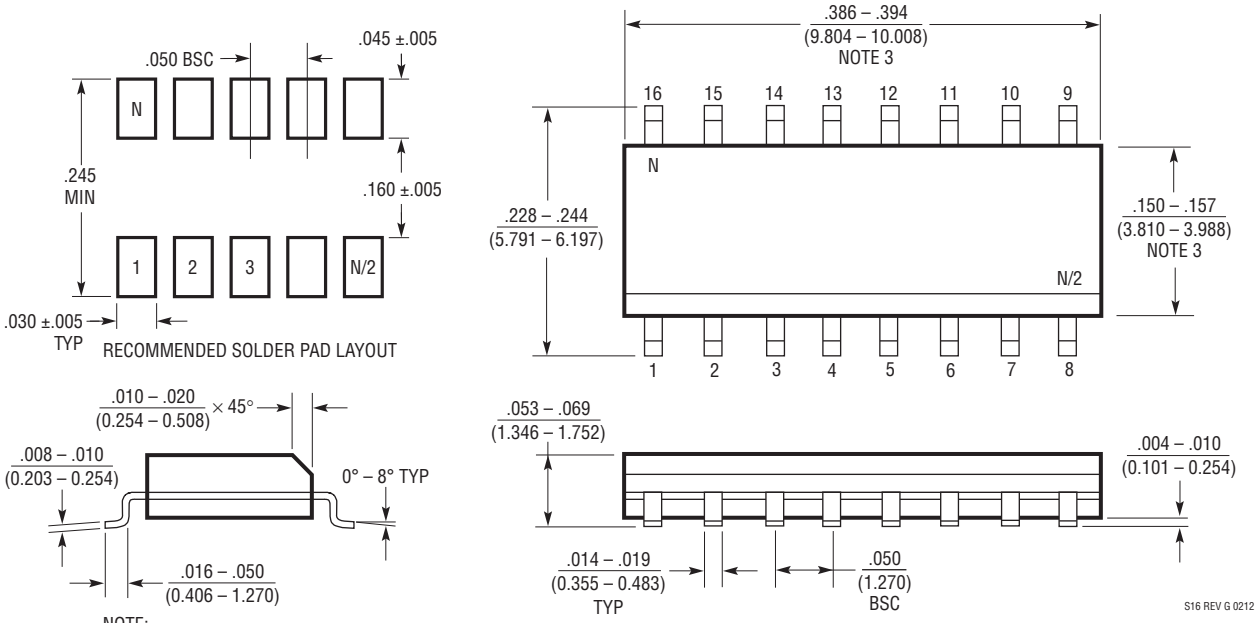

NOTE:
1. DIMENSIONS IN $\frac{\text{INCHES}}{\text{(MILLIMETERS)}}$
2. DRAWING NOT TO SCALE
3. THESE DIMENSIONS DO NOT INCLUDE MOLD FLASH OR PROTRUSIONS. MOLD FLASH OR PROTRUSIONS SHALL NOT EXCEED .006" (0.15mm)
4. PIN 1 CAN BE BEVEL EDGE OR A DIMPLE

REVISION HISTORY

REV	DATE	DESCRIPTION	PAGE NUMBER
A	12/09	Revise Features and Description	1
		Update Absolute Maximum Ratings, Pin Configuration, Order Information and Electrical Characteristics to Include H-grade	2-4
		Revise Pin Functions	7
		Revise Block Diagram	8
		Minor Text Edits to Operation Section	9
		Text Added to Applications Information	12, 15
		Update Typical Applications	18, 19
B	8/12	Added MP-Grade	2, 3, 4

Information furnished by Linear Technology Corporation is believed to be accurate and reliable. However, no responsibility is assumed for its use. Linear Technology Corporation makes no representation that the interconnection of its circuits as described herein will not infringe on existing patent rights.

TYPICAL APPLICATION

Overvoltage Regulator with Linear Regulator Up to 100mA

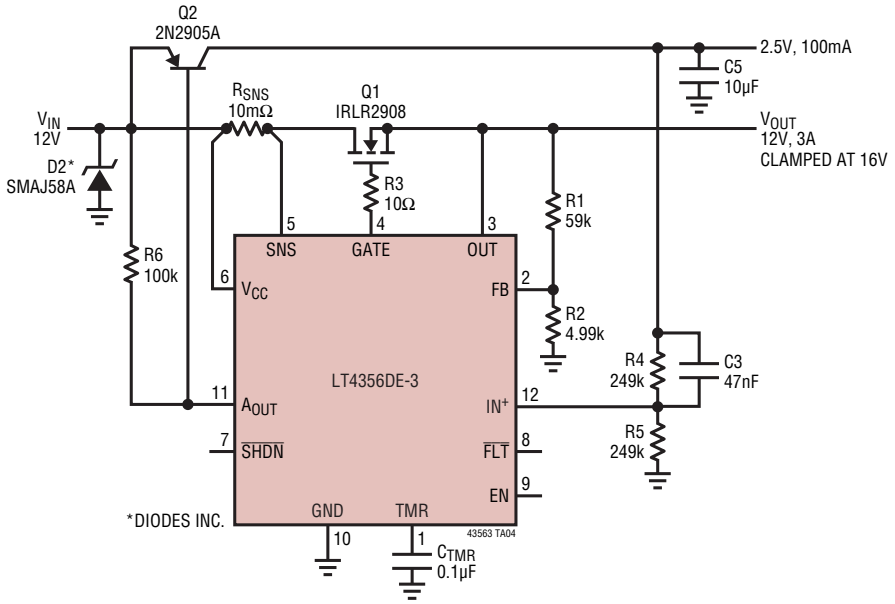

RELATED PARTS

PART NUMBER	DESCRIPTION	COMMENTS
LT1641-1/LT1641-2	Positive High Voltage Hot Swap™ Controllers	Active Current Limiting, Supplies From 9V to 80V
LTC1696	Overvoltage Protection Controller	ThinSOT™ Package, 2.7V to 28V
LTC1735	High Efficiency Synchronous Step-Down Switching Regulator	Output Fault Protection, 16-Pin SSOP
LTC1778	No R_{SENSE}™ Wide Input Range Synchronous Step-Down Controller	Up to 97% Efficiency, $4V \le V_{IN} \le 36V$, $0.8V \le V_{OUT} \le (0.9)(V_{IN})$, I_{OUT} Up to 20A
LTC2909	Triple/Dual Inputs UV/OV Negative Monitor	Pin Selectable Input Polarity Allows Negative and OV Monitoring
LTC2912/LTC2913	Single/Dual UV/OV Voltage Monitor	Ads UV and OV Trip Values, ±1.5% Threshold Accuracy
LTC2914	Quad UV/OV Monitor	For Positive and Negative Supplies
LTC3727/LTC3727-1	2-Phase, Dual, Synchronous Controller	$4V \le V_{IN} \le 36V$, $0.8V \le V_{OUT} \le 14V$
LTC3827/LTC3827-1	Low I_Q, Dual, Synchronous Controller	$4V \le V_{IN} \le 36V$, $0.8V \le V_{OUT} \le 10V$, 80µA Quiescent Current
LTC3835/LTC3835-1	Low I_Q, Synchronous Step-Down Controller	Single Channel LTC3827/LTC3827-1
LT3845	Low I_Q, Synchronous Step-Down Controller	$4V \le V_{IN} \le 60V$, $1.23V \le V_{OUT} \le 36V$, 120µA Quiescent Current
LT3850	Dual, 550kHz, 2-Phase Synchronous Step-Down Controller	Dual 180° Phased Controllers, V_{IN} 4V to 24V, 97% Duty Cycle, 4mm × 4mm QFN-28, SSOP-28 Packages
LT4256	Positive 48V Hot Swap Controller with Open-Circuit Detect	Foldback Current Limiting, Open-Circuit and Overcurrent Fault Output, Up to 80V Supply
LTC4260	Positive High Voltage Hot Swap Controller with ADC and I^2C	Wide Operating Range 8.5V to 80V
LTC4352	Ideal MOSFET ORing Diode	External N-channel MOSFETs Replace ORing Diodes, 0V to 18V
LTC4354	Negative Voltage Diode-OR Controller	Controls Two N-channel MOSFETs, 1µs Turn-Off, 80V Operation
LTC4355	Positive Voltage Diode-OR Controller	Controls Two N-channel MOSFETs, 0.5µs Turn-Off, 80V Operation

Linear Technology Corporation
1630 McCarthy Blvd., Milpitas, CA 95035-7417
(408) 432-1900 • FAX: (408) 434-0507 • www.linear.com

LT 0812 REV B • PRINTED IN USA

© LINEAR TECHNOLOGY CORPORATION 2009

Общество с ограниченной ответственностью «МосЧип» ИНН 7719860671 / КПП 771901001
Адрес: 105318, г.Москва, ул.Щербаковская д.3, офис 1107

Данный компонент на территории Российской Федерации

Вы можете приобрести в компании MosChip.

Для оперативного оформления запроса Вам необходимо перейти по данной ссылке:

http://moschip.ru/get-element

Вы можете разместить у нас заказ для любого Вашего проекта, будь то серийное производство или разработка единичного прибора.

В нашем ассортименте представлены ведущие мировые производители активных и пассивных электронных компонентов.

Нашей специализацией является поставка электронной компонентной базы двойного назначения, продукции таких производителей как XILINX, Intel (ex.ALTERA), Vicor, Microchip, Texas Instruments, Analog Devices, Mini-Circuits, Amphenol, Glenair.

Сотрудничество с глобальными дистрибьюторами электронных компонентов, предоставляет возможность заказывать и получать с международных складов практически любой перечень компонентов в оптимальные для Вас сроки.

На всех этапах разработки и производства наши партнеры могут получить квалифицированную поддержку опытных инженеров.

Система менеджмента качества компании отвечает требованиям в соответствии с ГОСТ Р ИСО 9001, ГОСТ РВ 0015-002 и ЭС РД 009

Офис по работе с юридическими лицами:

105318, г.Москва, ул.Щербаковская д.3, офис 1107, 1118, ДЦ «Щербаковский»

Телефон: +7 495 668-12-70 (многоканальный)

Факс: +7 495 668-12-70 (доб.304)

E-mail: info@moschip.ru

Skype отдела продаж:
moschip.ru
moschip.ru_4
moschip.ru_6
moschip.ru_9