Actual size:
4.6 x 2.2 x 0.5 in
117 x 56 x 12,7 mm

Maxi Family

24 V Input

DC-DC Converter Module

Features

- DC input range: 18 – 36 V
- Isolated output
- Input surge withstand: 50 V for 100 ms
- DC output: 3.3 – 48 V
- Programmable output: 10 to 110%
- Regulation: ±0.25% no load to full load
- Efficiency: Up to 88%
- Maximum operating temp: 100°C, full load
- Power density: up to 80 W per cubic inch
- Height above board: 0.43 in. (10,9 mm)
- Parallelable, with N+M fault tolerance
- Low noise ZCS/ZVS architecture
- RoHS Compliant (with F or G pin option)

Product Overview

These DC-DC converter modules use advanced power processing, control and packaging technologies to provide the performance, flexibility, reliability and cost effectiveness of a mature power component. High frequency ZCS/ZVS switching provides high power density with low noise and high efficiency.

Applications

Industrial and process control, distributed power, medical, ATE, communications, defense, aerospace

For details on proper operation please refer to the Design Guide & Applications Manual for Maxi, Mini, Micro Family.

Absolute Maximum Ratings

Parameter	Rating	Unit	Notes
+In to –In voltage	-0.5 to +53	Vdc	
PC to –In voltage	-0.5 to +7.0	Vdc	
PR to –In voltage	-0.5 to +7.0	Vdc	
SC to -Out voltage	-0.5 to +1.5	Vdc	
-Sense to -Out voltage	1.0	Vdc	
+Out to -Out, +Sense to -Out			See Module Output Specifications
Isolation voltage			
in to out	3000	Vrms	Test voltage
in to base	1500	Vrms	Test voltage
out to base	500	Vrms	Test voltage
Operating Temperature	-55 to +100	°C	M-Grade
Storage Temperature	-65 to +125	°C	M-Grade
Pin soldering temperature	500 (260)	°F (°C)	<5 sec; wave solder
	750 (390)	°F (°C)	<7 sec; hand solder
Mounting torque	5 (0.57)	in-lbs (N-m)	6 each

Part Numbering

e.g. V24A12T400BL2

V24A [ ] [ ] [ ] **B** [ ] [ ]

Output Voltage

3V3	=	3.3 V
5	=	5 V
8	=	8 V
12	=	12 V
15	=	15 V
24	=	24 V
28	=	28 V
36	=	36 V
48	=	48 V

Product Grade Temperatures (°C)

Grade		Operating	Storage
E	=	– 10 to +100	– 20 to +125
C	=	– 20 to +100	– 40 to +125
T	=	– 40 to +100	– 40 to +125
H	=	– 40 to +100	– 55 to +125
M	=	– 55 to +100	– 65 to +125

Output Power

Vout	Pout
3.3 V	200 W, 264 W
5 V	300 W, 400 W
6.5 V	400 W
8 V	300 W
12 V	300 W, 400 W, 500 W
15 V	300 W, 400 W
24 V	300 W, 400 W, 500 W
28 V	300 W, 400 W, 500 W
36 V	300 W, 400 W
48 V	300 W, 400 W

Pin Style	Finish
Blank: Short	Tin/Lead
L: Long	Tin/Lead
S: Short ModuMate	Gold
N: Long ModuMate	Gold
F: Short RoHS	Gold
G: Long RoHS	Gold

Baseplate

- Blank: Slotted
- 2: Threaded
- 3: Through-hole

MODULE FAMILY ELECTRICAL CHARACTERISTICS

Electrical characteristics apply over the full operating range of input voltage, output load (resistive) and baseplate temperature, unless otherwise specified. All temperatures refer to the operating temperature at the center of the baseplate.

■ MODULE INPUT SPECIFICATIONS

Parameter	Min	Typ	Max	Unit	Notes
Operating input voltage	18	24	36	Vdc	
Input surge withstand			50	Vdc	<100 ms
Undervoltage turn-on		17.5	17.9	Vdc	
Undervoltage turn-off	14.8	15.3		Vdc	
Overvoltage turn-off/on	36.3	37.8	39.6	Vdc	
Disabled input current			4.0	mA	PC pin low

■ MODULE OUTPUT SPECIFICATIONS

Parameter	Min	Typ	Max	Unit	Notes
Output voltage setpoint			±1%	Vout nom	Nominal input; full load; 25°C
Line regulation		±0.02	±0.20	%	Low line to high line; full load
Temperature regulation		±0.002	±0.005	% / °C	Over operating temperature range
Power sharing accuracy		±2	±5	%	10 to 100% of full load
Programming range	10		110	%	Of nominal output voltage. For trimming below 90% of nominal, a minimum load of 10% of maximum rated power may be required.
+Out to -Out, +Sense to -Out – Absolute Maximum Ratings					
3.3 V			-0.5 to 4.7	Vdc	Externally applied
5 V			-0.5 to 7.0	Vdc	Externally applied
8 V			-0.5 to 10.9	Vdc	Externally applied
12 V			-0.5 to 16.1	Vdc	Externally applied
15 V			-0.5 to 20.0	Vdc	Externally applied
24 V			-0.5 to 31.7	Vdc	Externally applied
28 V			-0.5 to 36.9	Vdc	Externally applied
36 V			-0.5 to 47.2	Vdc	Externally applied
48 V			-0.5 to 62.9	Vdc	Externally applied

Note: For important information relative to applications where the converter modules are subject to continuous dynamic loading, contact Vicor applications engineering at 800-927-9474.

■ THERMAL RESISTANCE AND CAPACITY

Parameter	Min	Typ	Max	Unit
Baseplate to sink; flat, greased surface		0.08		°C/Watt
Baseplate to sink; thermal pad (P/N 20263)		0.07		°C/Watt
Baseplate to ambient		4.9		°C/Watt
Baseplate to ambient; 1000 LFM		1.1		°C/Watt
Thermal capacity		165		Watt-sec/°C

MODULE FAMILY ELECTRICAL CHARACTERISTICS (CONT.)

■ MODULE CONTROL SPECIFICATIONS

Parameter	Min	Typ	Max	Unit	Notes
PRIMARY SIDE (PC = Primary Control; PR = Parallel)					
PC bias voltage current limit	5.50 1.5	5.75 2.1	6.00 3.0	Vdc mA	PC current = 1.0 mA PC voltage = 5.5 V During normal operation
PC module disable	2.3	2.6	2.9	Vdc	Switch must be able to sink ≥4 mA. See Fig. 2
PC module enable delay		4	7	ms	
PC module alarm			0.5	Vavg	UV, OV, OT, module fault. See Figs. 3 and 5
PC resistance	0.9	1.0	1.1	MΩ	See Fig. 3, converter off or fault mode
PR emitter amplitude	5.7	5.9	6.1	Volts	PR load >30 Ω, <30 pF
PR emitter current	150			mA	
PR receiver impedance	375	500	625	Ω	25°C
PR receiver threshold	2.4	2.5	2.6	Volts	Minimum pulse width: 20 ns
PR drive capability			12	modules	Without PR buffer amplifier
SECONDARY SIDE (SC = Secondary Control)					
SC bandgap voltage	1.21	1.23	1.25	Vdc	Referenced to –Sense
SC resistance	990	1000	1010	Ω	
SC capacitance		0.033		µF	
SC module alarm		0		Vdc	With open trim; referenced to –Sense. See Fig. 7

■ MODULE GENERAL SPECIFICATIONS

Parameter	Min	Typ	Max	Unit	Notes
Remote sense (total drop)			0.5	Vdc	0.25 V per leg (sense leads must be connected to respective, output terminals)
Isolation test voltage (in to out)*	3000			Vrms	Complies with reinforced insulation requirements
Isolation test voltage (in to base)*	1500			Vrms	Complies with basic insulation requirements
Isolation test voltage (out to base)*	500			Vrms	Complies with operational insulation requirements
Isolation resistance		10		MΩ	in to out, in to baseplate, out to baseplate
Weight (E, C, T grade)	6.5 (184.3)	7.3 (207.5)	8.1 (230.7)	ounces (grams)	
Weight (H, M grade)	7.4 (209.3)	8.2 (232.5)	9.0 (255.7)	ounces (grams)	
Temperature limiting	100	115		°C	See Figs. 3 and 5. Do not operate coverter >100C.
Agency approvals		cURus, cTÜVus, CE			UL60950-1, EN60950-1, CSA60950-1, IEC60950-1. With appropriate fuse in series with the +Input

** Isolation test voltage, 1 minute or less.*

Note:
Specifications are subject to change without notice.

■ MODULE SPECIFIC OPERATING SPECIFICATIONS

3.3 Vout, 264 W (e.g. V24A3V3C264BL)

Parameter	Min	Typ	Max	Unit	Notes
Efficiency	75.5	78.5		%	Nominal input; full load; 25°C
Ripple and noise		75	94	mV	p-p; Nominal input; full load; 20 MHz bandwidth
Output OVP setpoint	4.14	4.3	4.46	Volts	25°C; recycle input voltage or PC to restart (>100 ms off)
Dissipation, standby		8	12	Watts	No load
Load regulation		±0.02	±0.2	%	No load to full load; nominal input
Load current	0		80	Amps	
Current limit	81.6	92	108	Amps	Output voltage 95% of nominal
Short circuit current	56	92	108	Amps	Output voltage <250 mV

3.3 Vout, 200 W (e.g. V24A3V3C200BL)

Parameter	Min	Typ	Max	Unit	Notes
Efficiency	73.9	79.9		%	Nominal input; full load; 25°C
Ripple and noise		43	54	mV	p-p; Nominal input; full load; 20 MHz bandwidth
Output OVP setpoint	4.48	4.65	4.82	Volts	25°C; recycle input voltage or PC to restart (>100 ms off)
Dissipation, standby		6.2	10	Watts	No load
Load regulation		±0.02	±0.2	%	No load to full load; nominal input
Load current	0		60.6	Amps	
Current limit	61.8	69.7	81.9	Amps	Output voltage 95% of nominal
Short circuit current	42.4	69.7	81.9	Amps	Output voltage <250 mV

5 Vout, 400 W (e.g. V24A5C400BL)

Parameter	Min	Typ	Max	Unit	Notes
Efficiency	80.0	84.5		%	Nominal input; full load; 25°C
Ripple and noise		152	190	mV	p-p; Nominal input; full load; 20 MHz bandwidth
Output OVP setpoint	6.03	6.25	6.47	Volts	25°C; recycle input voltage or PC to restart (>100 ms off)
Dissipation, standby		6.8	10.1	Watts	No load
Load regulation		±0.02	±0.25	%	No load to full load; nominal input
Load current	0		80	Amps	
Current limit	81.6	92	104	Amps	Output voltage 95% of nominal
Short circuit current	56	92	104	Amps	Output voltage <250 mV

5 Vout, 300 W (e.g. V24A5C300BL)

Parameter	Min	Typ	Max	Unit	Notes
Efficiency	82.5	84.4		%	Nominal input; full load; 25°C
Ripple and noise		120	150	mV	p-p; Nominal input; full load; 20 MHz bandwidth
Output OVP setpoint	6.03	6.25	6.47	Volts	25°C; recycle input voltage or PC to restart (>100 ms off)
Dissipation, standby		7.2	8.8	Watts	No load
Load regulation		±0.02	±0.2	%	No load to full load; nominal input
Load current	0		60	Amps	
Current limit	61.2	69	81	Amps	Output voltage 95% of nominal
Short circuit current	42	69	81	Amps	Output voltage <250 mV

6.5 Vout, 400 W (e.g. V24A6V5C400BL)

Parameter	Min	Typ	Max	Unit	Notes
Efficiency	85.0	86.1		%	Nominal input; full load; 25°C
Ripple and noise		100	125	mV	p-p; Nominal input; full load; 20 MHz bandwidth
Output OVP setpoint	7.7	7.98	8.26	Volts	25°C; recycle input voltage or PC to restart (>100 ms off)
Dissipation, standby		9.2	10.5	Watts	No load
Load regulation		±0.02	±0.2	%	No load to full load; nominal input
Output Current	0		61.5	Amps	
Current limit	62.7	70.7	83.1	Amps	Output voltage 95% of nominal
Short circuit current	43	70.7	83.1	Amps	Output voltage <250 mV

■ MODULE SPECIFIC OPERATING SPECIFICATIONS (CONT.)

8 Vout, 300 W (e.g. V24A8C300BL)

Parameter	Min	Typ	Max	Unit	Notes
Efficiency	85.6	86.5		%	Nominal input; full load; 25°C
Ripple and noise		215	269	mV	p-p; Nominal input; full load; 20MHz bandwidth
Output OVP setpoint	9.36	9.7	10.1	Volts	25°C; recycle input voltage or PC to restart (>100 ms off)
Dissipation, standby		8.7	13.9	Watts	No load
Load regulation		±0.02	±0.2	%	No load to full load; nominal input
Load current	0		37.5	Amps	
Current limit	38.2	43.1	50.7	Amps	Output voltage 95% of nominal
Short circuit current	26.2	43.1	50.7	Amps	Output voltage <250 mV

12 Vout, 500 W (e.g. V24A12C500BL) Safety approvals pending

Parameter	Min	Typ	Max	Unit	Notes
Efficiency	85.8	87.2		%	Nominal input; full load; 25°C
Ripple and noise		272	340	mV	p-p; Nominal input; full load; 20 MHz bandwidth
Output OVP setpoint	13.8	14.3	14.8	Volts	25°C; recycle input voltage or PC to restart (>100 ms off)
Dissipation, standby		10.8	12.0	Watts	No load
Load regulation		±0.02	±0.2	%	No load to full load; nominal input
Load current	0		41.67	Amps	
Current limit	42.5	47.9	56.3	Amps	Output voltage 95% of nominal
Short circuit current	29.2	47.9	56.3	Amps	Output voltage <250 mV

12 Vout, 400 W (e.g. V24A12C400BL)

Parameter	Min	Typ	Max	Unit	Notes
Efficiency	85.0	86.8		%	Nominal input; full load; 25°C
Ripple and noise		250	320	mV	p-p; Nominal input; full load; 20 MHz bandwidth
Output OVP setpoint	13.7	14.3	14.9	Volts	25°C; recycle input voltage or PC to restart (>100 ms off)
Dissipation, standby		6.8	10.2	Watts	No load
Load regulation		±0.02	±0.2	%	No load to full load; nominal input
Load current	0		33.33	Amps	
Current limit	34	38.4	43.5	Amps	Output voltage 95% of nominal
Short circuit current	23.3	38.4	43.5	Amps	Output voltage <250 mV

12 Vout, 300 W (e.g. V24A12C300BL)

Parameter	Min	Typ	Max	Unit	Notes
Efficiency	86.0	87.0		%	Nominal input; full load; 25°C
Ripple and noise		196	245	mV	p-p; Nominal input; full load; 20 MHz bandwidth
Output OVP setpoint	13.7	14.3	14.9	Volts	25°C; recycle input voltage or PC to restart (>100 ms off)
Dissipation, standby		6.9	8.6	Watts	No load
Load regulation		±0.02	±0.2	%	No load to full load; nominal input
Load current	0		25	Amps	
Current limit	25.5	28.8	33.8	Amps	Output voltage 95% of nominal
Short circuit current	17.5	28.8	33.8	Amps	Output voltage < 250mV

15 Vout, 400 W (e.g. V24A15C400BL)

Parameter	Min	Typ	Max	Unit	Notes
Efficiency	86.1	87.5		%	Nominal input; full load; 25°C
Ripple and noise		60	75	mV	p-p; Nominal input; full load; 20 MHz bandwidth
Output OVP setpoint	17.1	17.8	18.5	Volts	25°C; recycle input voltage or PC to restart (>100 ms off)
Dissipation, standby		6.3	9.4	Watts	No load
Load regulation		±0.02	±0.2	%	No load to full load; nominal input
Load current	0		26.67	Amps	
Current limit	27.2	30.7	34.8	Amps	Output voltage 95% of nominal
Short circuit current	18.6	30.7	37.9	Amps	Output voltage <250 mV

■ MODULE SPECIFIC OPERATING SPECIFICATIONS

15 Vout, 300 W (e.g. V24A15C300BL)

Parameter	Min	Typ	Max	Unit	Notes
Efficiency	85.0	86.2		%	Nominal input; full load; 25°C
Ripple and noise		160	200	mV	p-p; Nominal input; full load; 20 MHz bandwidth
Output OVP setpoint	17.1	17.8	18.5	Volts	25°C; recycle input voltage or PC to restart (>100 ms off)
Dissipation, standby		8.1	10	Watts	No load
Load regulation		±0.02	±0.2	%	No load to full load; nominal input
Load current	0		20	Amps	
Current limit	20.4	23	27	Amps	Output voltage 95% of nominal
Short circuit current	14	23	27	Amps	Output voltage <250 mV

24 Vout, 500 W (e.g. V24A24C500BL) Safety Aprrovals Pending

Parameter	Min	Typ	Max	Unit	Notes
Efficiency	87.3	88.3		%	Nominal input; full load; 25°C
Ripple and noise		172	215	mV	p-p; Nominal input; full load; 20 MHz bandwidth
Output OVP setpoint	27.1	28.1	29.1	Volts	25°C; recycle input voltage or PC to restart (>100 ms off)
Dissipation, standby		11.9	19.1	Watts	No load
Load regulation		±0.02	±0.2	%	No load to full load; nominal input
Load current	0		20.83	Amps	
Current limit	21.3	24.0	28.1	Amps	Output voltage 95% of nominal
Short circuit current	14.6	24.0	28.1	Amps	Output voltage <250 mV

24 Vout, 400 W (e.g. V24A24C400BL)

Parameter	Min	Typ	Max	Unit	Notes
Efficiency	86.7	88.2		%	Nominal input; full load; 25°C
Ripple and noise		80	100	mV	p-p; Nominal input; full load; 20 MHz bandwidth
Output OVP setpoint	27.1	28.1	29.1	Volts	25°C; recycle input voltage or PC to restart (>100 ms off)
Dissipation, standby		11	12	Watts	No load
Load regulation		±0.02	±0.2	%	No load to full load; nominal input
Load current	0		16.67	Amps	
Current limit	17	19.2	23.4	Amps	Output voltage 95% of nominal
Short circuit current	2.25	19.2	23.4	Amps	Output voltage <250 mV

24 Vout, 300 W (e.g. V24A24C300BL)

Parameter	Min	Typ	Max	Unit	Notes
Efficiency	86.8	88.2		%	Nominal input; full load; 25°C
Ripple and noise		85	107	mV	p-p; Nominal input; full load; 20 MHz bandwidth
Output OVP setpoint	27.1	28.1	29.1	Volts	25°C; recycle input voltage or PC to restart (>100 ms off)
Dissipation, standby		7.8	10	Watts	No load
Load regulation		±0.02	±0.2	%	No load to full load; nominal input
Load current	0		12.5	Amps	
Current limit	12.7	14.4	16.9	Amps	Output voltage 95% of nominal
Short circuit current	8.75	14.4	16.9	Amps	Output voltage <250 mV

28 Vout, 500 W (e.g. V24A28C500BL) Safety approvals pending

Parameter	Min	Typ	Max	Unit	Notes
Efficiency	86.0	88.0		%	Nominal input; full load; 25°C
Ripple and noise		172	215	mV	p-p; Nominal input; full load; 20 MHz bandwidth
Output OVP setpoint	31.5	32.7	33.9	Volts	25°C; recycle input voltage or PC to restart (>100 ms off)
Dissipation, standby		12.5	25	Watts	No load
Load regulation		±0.02	±0.2	%	No load to full load; nominal input
Load current	0		17.9	Amps	
Current limit	18.3	20.6	24.2	Amps	Output voltage 95% of nominal
Short circuit current	12.5	20.6	24.2	Amps	Output voltage <250 mV

■ MODULE SPECIFIC OPERATING SPECIFICATIONS (CONT.)

28 Vout, 400 W (e.g. V24A28C400BL)

Parameter	Min	Typ	Max	Unit	Notes
Efficiency	86.0	87.8		%	Nominal input; full load; 25°C
Ripple and noise		172	215	mV	p-p; Nominal input; full load; 20 MHz bandwidth
Output OVP setpoint	31.5	32.7	33.9	Volts	25°C; recycle input voltage or PC to restart (>100 ms off)
Dissipation, standby		6.3	9.5	Watts	No load
Load regulation		±0.02	±0.2	%	No load to full load; nominal input
Load current	0		14.29	Amps	
Current limit	14.5	16.4	19.4	Amps	Output voltage 95% of nominal
Short circuit current	10	16.4	19.4	Amps	Output voltage <250 mV

28 Vout, 300 W (e.g. V24A28C300BL)

Parameter	Min	Typ	Max	Unit	Notes
Efficiency	87.0	88.0		%	Nominal input; full load; 25°C
Ripple and noise		100	125	mV	p-p; Nominal input; full load; 20 MHz bandwidth
Output OVP setpoint	31.5	32.7	33.9	Volts	25°C; recycle input voltage or PC to restart (>100 ms off)
Dissipation, standby		7.1	9.3	Watts	No load
Load regulation		±0.02	±0.2	%	No load to full load; nominal input
Load current	0		10.71	Amps	
Current limit	10.9	12.3	14.5	Amps	Output voltage 95% of nominal
Short circuit current	3	12.3	14.5	Amps	Output voltage <250 mV

36 Vout, 400 W (e.g. V24A36C400BL)

Parameter	Min	Typ	Max	Unit	Notes
Efficiency	86.0	88.0		%	Nominal input; full load; 25°C
Ripple and noise		120	150	mV	p-p; Nominal input; full load; 20 MHz bandwidth
Output OVP setpoint	40.4	41.9	43.4	Volts	25°C; recycle input voltage or PC to restart (>100 ms off)
Dissipation, standby		10	13	Watts	No load
Load regulation		±0.02	±0.2	%	No load to full load; nominal input
Load current	0		11.11	Amps	
Current limit	11.3	12.8	15	Amps	Output voltage 95% of nominal
Short circuit current	7.77	12.8	15	Amps	Output voltage <250 mV

36 Vout, 300 W (e.g. V24A36C300BL)

Parameter	Min	Typ	Max	Unit	Notes
Efficiency	87.0	88.3		%	Nominal input; full load; 25°C
Ripple and noise		80	100	mV	p-p; Nominal input; full load; 20 MHz bandwidth
Output OVP setpoint	40.4	41.9	43.4	Volts	25°C; recycle input voltage or PC to restart (>100 ms off)
Dissipation, standby		9.8	12	Watts	No load
Load regulation		±0.02	±0.2	%	No load to full load; nominal input
Load current	0		8.33	Amps	
Current limit	8.49	9.58	11.3	Amps	Output voltage 95% of nominal
Short circuit current	5.83	9.58	11.3	Amps	Output voltage <250 mV

48 Vout, 400 W (e.g. V24A48C400BL)

Parameter	Min	Typ	Max	Unit	Notes
Efficiency	84.7	86.7		%	Nominal input; full load; 25°C
Ripple and noise		160	200	mV	p-p; Nominal input; full load; 20 MHz bandwidth
Output OVP setpoint	53.8	55.8	57.8	Volts	25°C; recycle input voltage or PC to restart (>100 ms off)
Dissipation, standby		11.8	12.7	Watts	No load
Load regulation		±0.02	±0.2	%	No load to full load; nominal input
Load current	0		8.33	Amps	
Current limit	8.49	9.58	11.3	Amps	Output voltage 95% of nominal
Short circuit current	4.79	9.58	11.3	Amps	Output voltage <250 mV

■ MODULE SPECIFIC OPERATING SPECIFICATIONS

48 Vout, 300 W (e.g. V24A48C300BL)

Parameter	Min	Typ	Max	Unit	Notes
Efficiency	86.0	87.1		%	Nominal input; full load; 25°C
Ripple and noise		180	225	mV	p-p; Nominal input; full load; 20 MHz bandwidth
Output OVP setpoint	53.7	55.7	57.7	Volts	25°C; recycle input voltage or PC to restart (>100 ms off)
Dissipation, standby		7.7	10	Watts	No load
Load regulation		±0.02	±0.2	%	No load to full load; nominal input
Load current	0		6.25	Amps	
Current limit	6.37	7.19	8.44	Amps	Output voltage 95% of nominal
Short circuit current	4.37	7.19	8.44	Amps	Output voltage <250 mV

BASIC MODULE OPERATION

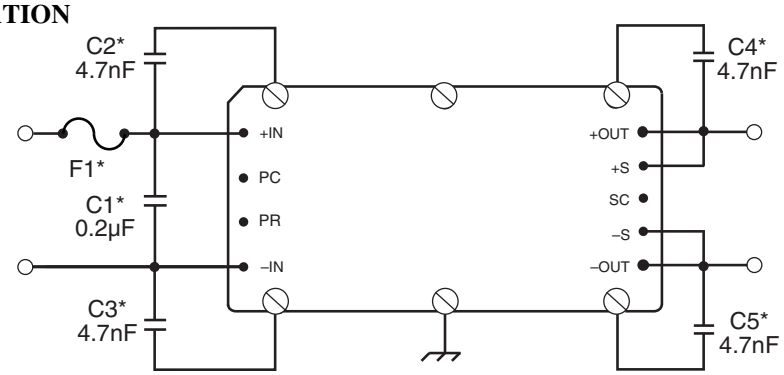

For C1 – C5, keep leads and connections short.

***Figure 1** — Basic module operation requires fusing, grounding, bypassing capacitors.*
** See Maxi, Mini, Micro Design Guide.*

Comprehensive Online Application Information

The Design Guide and Applications Manual includes:

- Application circuits
- Design requirements
- EMC considerations
- Current sharing in power arrays
- Thermal performance information
- Recommended soldering methods
- Accessory modules – filtering, rectification, front-ends
- Mounting options

...and more.

CLICK HERE TO VIEW DESIGN GUIDE

Also at vicorpower.com

- PowerBench online configurators
- Over 20 Application Notes
- Online calculators – thermal, trimming, hold-up
- PDF data sheets for ALL Vicor products

PRIMARY CONTROL - PC PIN

Module Enable/Disable

The module may be disabled by pulling PC below 2.3 V with respect to the –Input. This may be done with an open collector transistor, relay, or optocoupler. Multiple converters may be disabled with a single transistor or relay either directly or via "OR'ing" diodes. See Figure 2.

Primary Auxiliary Supply

At 5.7 V, PC can source up to 1.5 mA. In the example shown in Figure 4, PC powers a module enabled LED.

Module Alarm

The module contains "watchdog" circuitry which monitors input voltage, operating temperature and internal operating parameters. In the event that any of these parameters are outside of their allowable operating range, the module will shut down and PC will go low. PC will periodically go high and the module will check to see if the fault (as an example, overtemperature) has cleared. If the fault has not been cleared, PC will go low again and the cycle will restart. The SC pin will go low in the event of a fault and return to its normal state after the fault has been cleared. See Figures 3 and 5.

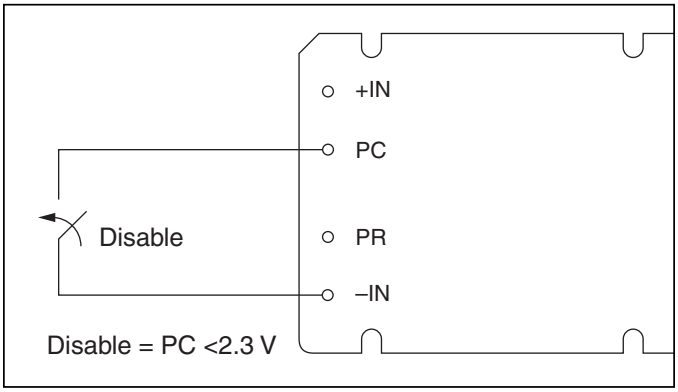

***Figure 2** — Module enable/disable.*

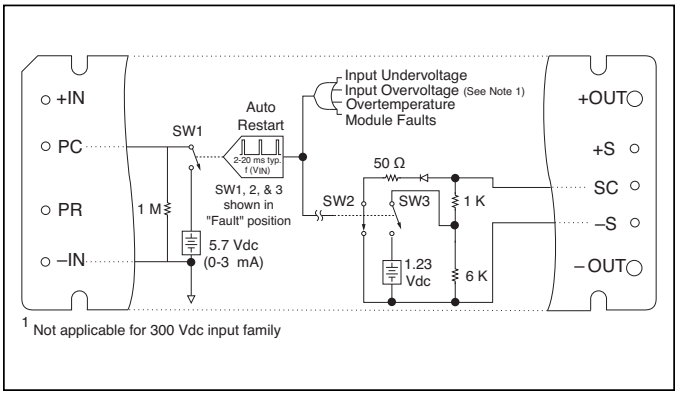

***Figure 3** — PC/SC module alarm logic.*

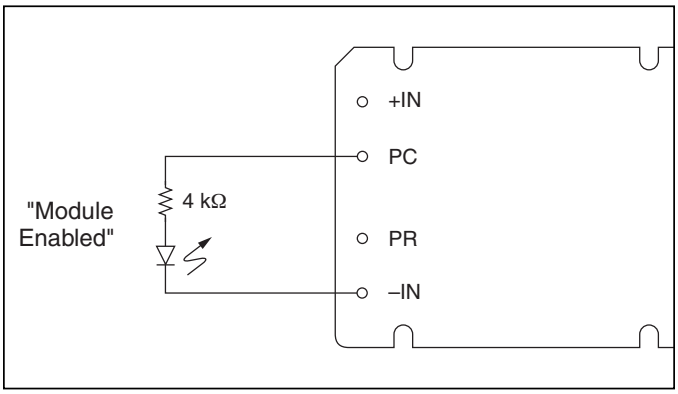

***Figure 4** — LED on-state indicator.*

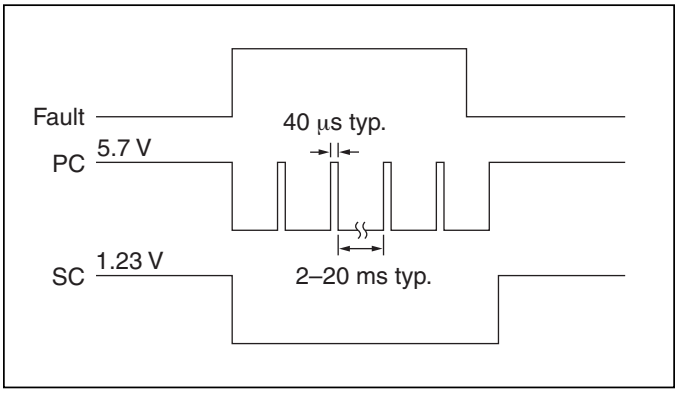

***Figure 5** — PC/SC module alarm timing.*

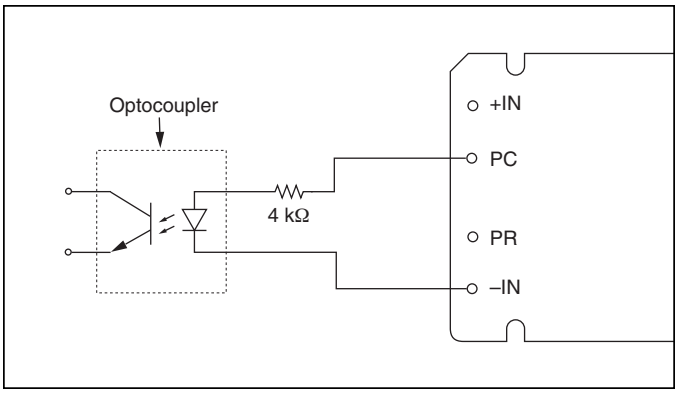

***Figure 6** — Isolated on-state indicator.*

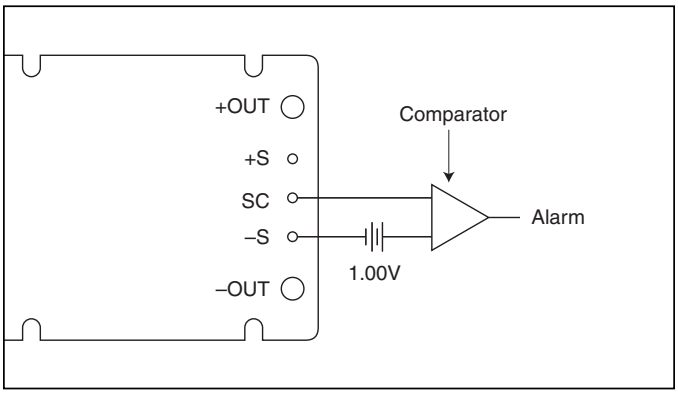

***Figure 7** — Secondary side on-state indicator.*

SECONDARY CONTROL - SC PIN

Output Voltage Programming

The output voltage of the converter can be adjusted or programmed via fixed resistors, potentiometers or voltage DACs. See Figure 8.

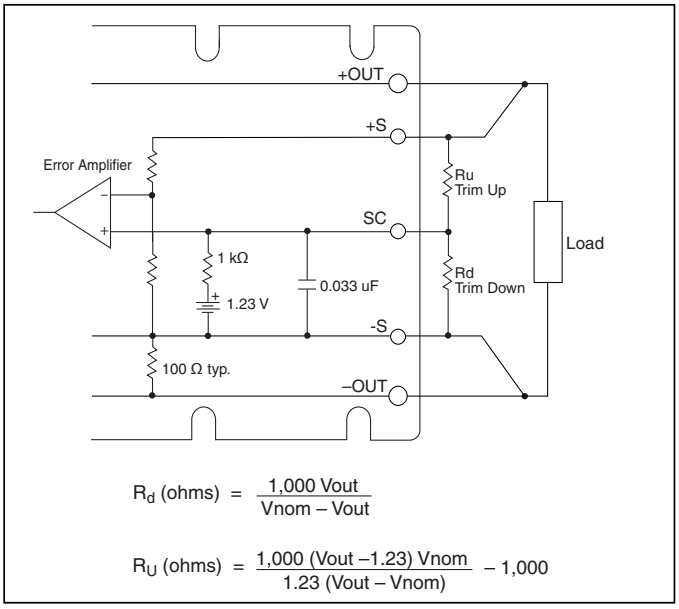

***Figure 8** — Output voltage trim down and trim up circuit.*

Trim Down

1. This converter is not a constant power device – it has a constant current limit. Hence, available output power is reduced by the same percentage that output voltage is trimmed down. Do not exceed maximum rated output current.
2. The trim down resistor must be connected between the SC and -S pins. Do not bypass the SC pin directly with a capacitor.

Trim Up

1. The converter is rated for a maximum delivered power. To ensure that maximum rated power is not exceeded, reduce maximum output current by the same percentage increase in output voltage.
2. The trim up resistor must be connected between the SC and +S pins. Do not bypass the SC pin directly with a capacitor.
3. Do not trim the converter above maximum trim range (typically +10%) or the output over voltage protection circuitry may be activated.

Trim resistor values calculated automatically:
On-line calculators for trim resistor values are available on the vicor website at:
asp.vicorpower.com/calculators/calculators.asp?calc=1
Resistor values can be calculated for fixed trim up, fixed trim down and for variable trim up or down.

PARALLEL BUS - PR PIN

Parallel Operation

The PR pin supports paralleling for increased power with N+1 (N+M) redundancy. Modules of the same input voltage, output voltage, and power level will current share if all PR pins are suitably interfaced.

Compatible interface architectures include the following:

AC coupled single-wire interface. All PR pins are connected to a single communication bus through 0.001 µF (500 V) capacitors. This interface supports current sharing and is fault tolerant except for the communication bus. Up to three converters may be paralleled by this method. See Figure 9.

Transformer coupled interface. For paralleling four or more converters a transformer coupled interface is required. See Figure 10.

For details on parallel operation please refer to the

Design Guide & Applications Manual for Maxi, Mini, Micro Family.

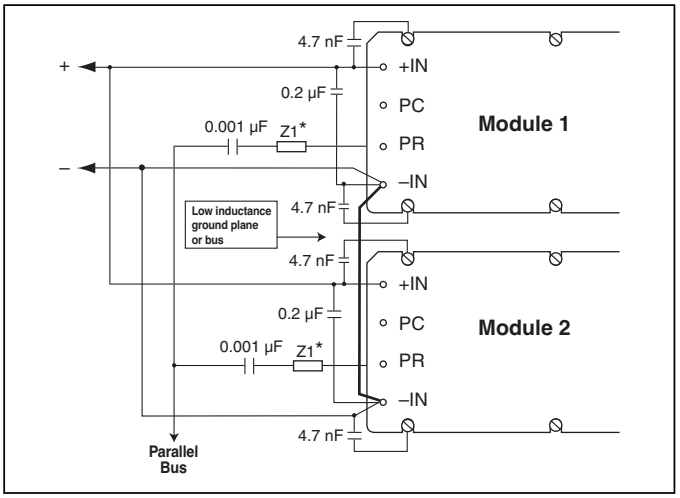

***Figure 9** — AC coupled single-wire interface.*
** See Maxi, Mini, Micro Design Guide.*

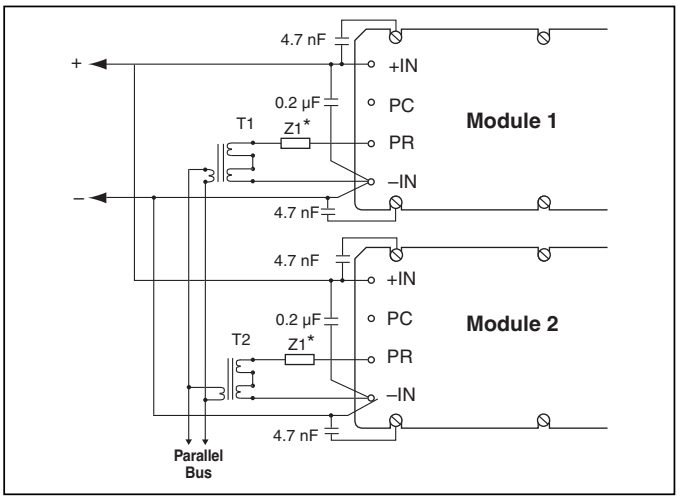

***Figure 10** — Transformer-coupled interface.*

PARALLEL BUS OUTPUT

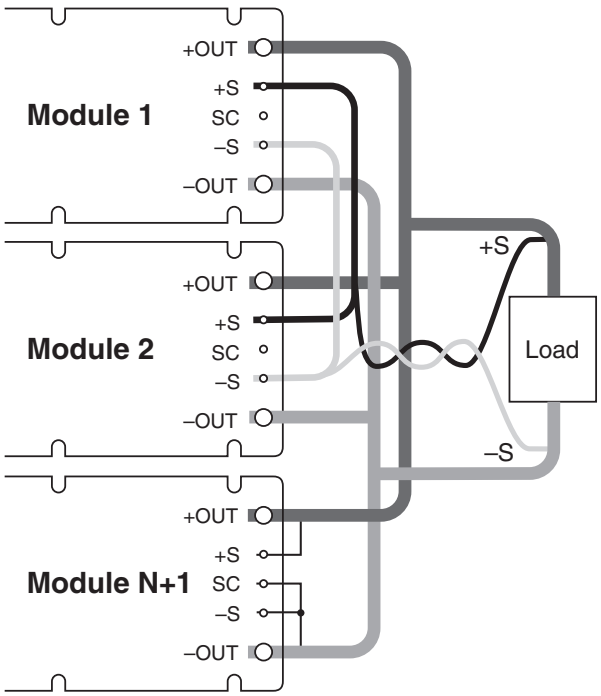

- The +Out and –Out power buses should be designed to minimize and balance parasitic impedance from each module output to the load.
- The +Sense pins must be tied together to form a +Sense bus. This must be Kelvin connected to +Out at a single point. The –Sense pins should be tied together to form a –Sense bus. This must be Kelvin connected to –Out at a single point.
- At the discretion of the power system designer, a subset of all modules within an array may be configured as slaves by connecting SC to –S.
- OR'ing diodes may be inserted in series with the +Out pins of each module to provide module output fault tolerance.
- The +Sense and -Sense leads should be routed in close proximity to each other on the printed circuit board. If wires are used to connect the converters on a PCB to an external load, the Sense leads should be twisted together to reduce noise pickup.

Figure 11 *— N+1 module array output connections.*

■ PIN STYLES*

Designator	Description	Finish	Notes
(None)	Short	Tin/Lead	Requires in-board, mounting
L	Long	Tin/Lead	On-board mounting for 0.065" boards
S	Short ModuMate	Gold	SurfMate or in-board socket mounting
N	Long ModuMate	Gold	On-board socket mounting
F	Short RoHS	Gold	Select for RoHS compliant in-board solder, socket, or SurfMate mounting
G	Long RoHS	Gold	Select for RoHS compliant on-board solder or socket mounting

* Pin style designator follows the "B" after the output power and precedes the baseplate designator.
Ex. V48A12T500B**N**2 — Long ModuMate Pins

MECHANICAL DRAWINGS

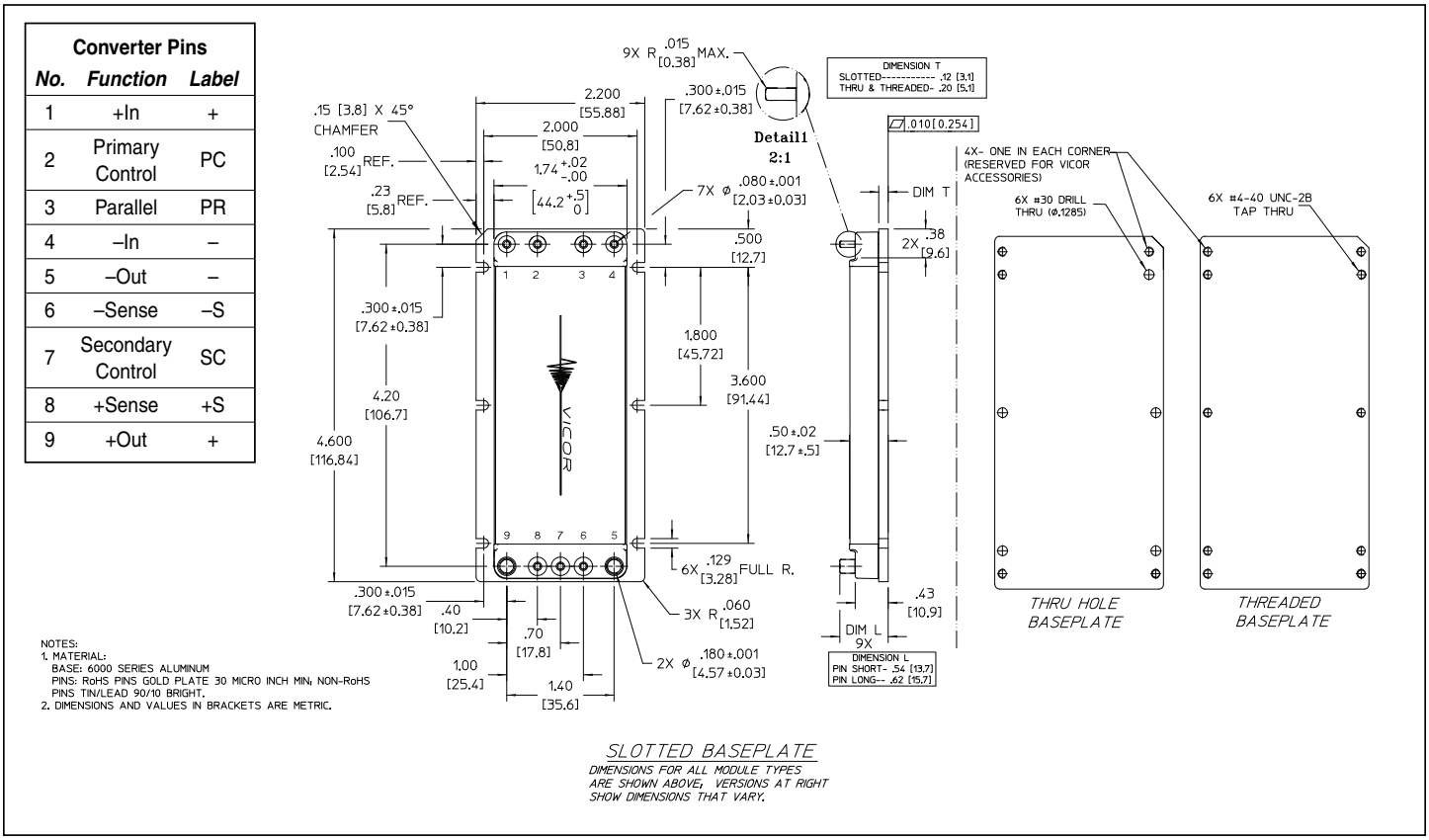

Figure 12 — Module outline

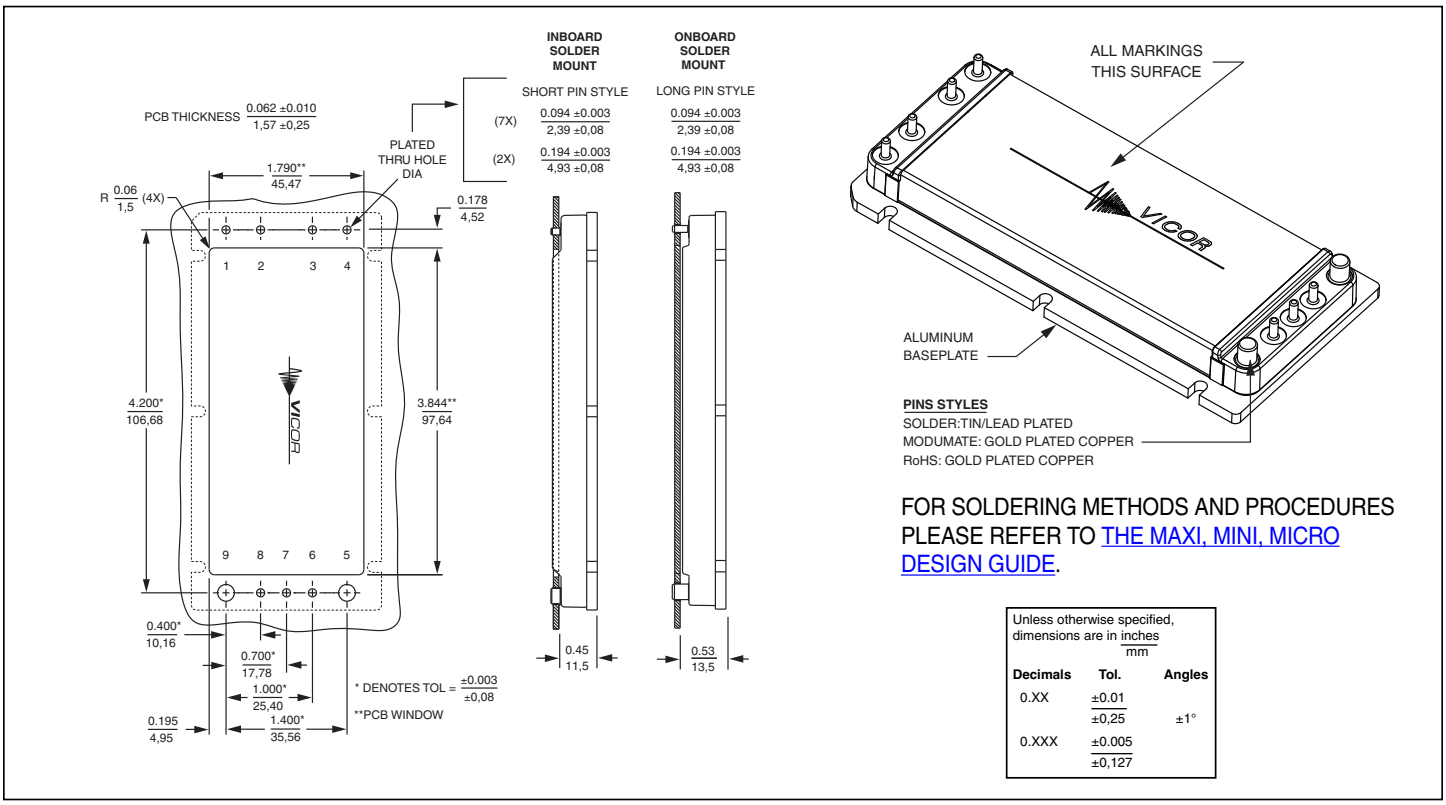

Figure 13 — PCB mounting specifications

Vicor's comprehensive line of power solutions includes high density AC-DC and DC-DC modules and accessory components, fully configurable AC-DC and DC-DC power supplies, and complete custom power systems.

Information furnished by Vicor is believed to be accurate and reliable. However, no responsibility is assumed by Vicor for its use. Vicor makes no representations or warranties with respect to the accuracy or completeness of the contents of this publication. Vicor reserves the right to make changes to any products, specifications, and product descriptions at any time without notice. Information published by Vicor has been checked and is believed to be accurate at the time it was printed; however, Vicor assumes no responsibility for inaccuracies. Testing and other quality controls are used to the extent Vicor deems necessary to support Vicor's product warranty. Except where mandated by government requirements, testing of all parameters of each product is not necessarily performed.
Specifications are subject to change without notice.

Vicor's Standard Terms and Conditions

All sales are subject to Vicor's Standard Terms and Conditions of Sale, which are available on Vicor's webpage or upon request.

Product Warranty

In Vicor's standard terms and conditions of sale, Vicor warrants that its products are free from non-conformity to its Standard Specifications (the "Express Limited Warranty"). This warranty is extended only to the original Buyer for the period expiring two (2) years after the date of shipment and is not transferable.
UNLESS OTHERWISE EXPRESSLY STATED IN A WRITTEN SALES AGREEMENT SIGNED BY A DULY AUTHORIZED VICOR SIGNATORY, VICOR DISCLAIMS ALL REPRESENTATIONS, LIABILITIES, AND WARRANTIES OF ANY KIND (WHETHER ARISING BY IMPLICATION OR BY OPERATION OF LAW) WITH RESPECT TO THE PRODUCTS, INCLUDING, WITHOUT LIMITATION, ANY WARRANTIES OR REPRESENTATIONS AS TO MERCHANTABILITY, FITNESS FOR PARTICULAR PURPOSE, INFRINGEMENT OF ANY PATENT, COPYRIGHT, OR OTHER INTELLECTUAL PROPERTY RIGHT, OR ANY OTHER MATTER.

This warranty does not extend to products subjected to misuse, accident, or improper application, maintenance, or storage. Vicor shall not be liable for collateral or consequential damage. Vicor disclaims any and all liability arising out of the application or use of any product or circuit and assumes no liability for applications assistance or buyer product design. Buyers are responsible for their products and applications using Vicor products and components. Prior to using or distributing any products that include Vicor components, buyers should provide adequate design, testing and operating safeguards.

Vicor will repair or replace defective products in accordance with its own best judgment. For service under this warranty, the buyer must contact Vicor to obtain a Return Material Authorization (RMA) number and shipping instructions. Products returned without prior authorization will be returned to the buyer. The buyer will pay all charges incurred in returning the product to the factory. Vicor will pay all reshipment charges if the product was defective within the terms of this warranty.

Life Support Policy

VICOR'S PRODUCTS ARE NOT AUTHORIZED FOR USE AS CRITICAL COMPONENTS IN LIFE SUPPORT DEVICES OR SYSTEMS WITHOUT THE EXPRESS PRIOR WRITTEN APPROVAL OF THE CHIEF EXECUTIVE OFFICER AND GENERAL COUNSEL OF VICOR CORPORATION. As used herein, life support devices or systems are devices which (a) are intended for surgical implant into the body, or (b) support or sustain life and whose failure to perform when properly used in accordance with instructions for use provided in the labeling can be reasonably expected to result in a significant injury to the user. A critical component is any component in a life support device or system whose failure to perform can be reasonably expected to cause the failure of the life support device or system or to affect its safety or effectiveness. Per Vicor Terms and Conditions of Sale, the user of Vicor products and components in life support applications assumes all risks of such use and indemnifies Vicor against all liability and damages.

Intellectual Property Notice

Vicor and its subsidiaries own Intellectual Property (including issued U.S. and Foreign Patents and pending patent applications) relating to the products described in this data sheet. No license, whether express, implied, or arising by estoppel or otherwise, to any intellectual property rights is granted by this document. Interested parties should contact Vicor's Intellectual Property Department.

Vicor Corporation
25 Frontage Road
Andover, MA, USA 01810
Tel: 800-735-6200
Fax: 978-475-6715

email
Customer Service: custserv@vicorpower.com
Technical Support: apps@vicorpower.com

Общество с ограниченной ответственностью «МосЧип» ИНН 7719860671 / КПП 771901001
Адрес: 105318, г.Москва, ул.Щербаковская д.3, офис 1107

Данный компонент на территории Российской Федерации

Вы можете приобрести в компании MosChip.

Для оперативного оформления запроса Вам необходимо перейти по данной ссылке:

http://moschip.ru/get-element

Вы можете разместить у нас заказ для любого Вашего проекта, будь то серийное производство или разработка единичного прибора.

В нашем ассортименте представлены ведущие мировые производители активных и пассивных электронных компонентов.

Нашей специализацией является поставка электронной компонентной базы двойного назначения, продукции таких производителей как XILINX, Intel (ex.ALTERA), Vicor, Microchip, Texas Instruments, Analog Devices, Mini-Circuits, Amphenol, Glenair.

Сотрудничество с глобальными дистрибьюторами электронных компонентов, предоставляет возможность заказывать и получать с международных складов практически любой перечень компонентов в оптимальные для Вас сроки.

На всех этапах разработки и производства наши партнеры могут получить квалифицированную поддержку опытных инженеров.

Система менеджмента качества компании отвечает требованиям в соответствии с ГОСТ Р ИСО 9001, ГОСТ РВ 0015-002 и ЭС РД 009

Офис по работе с юридическими лицами:

105318, г.Москва, ул.Щербаковская д.3, офис 1107, 1118, ДЦ «Щербаковский»

Телефон: +7 495 668-12-70 (многоканальный)

Факс: +7 495 668-12-70 (доб.304)

E-mail: info@moschip.ru

Skype отдела продаж:
moschip.ru
moschip.ru_4
moschip.ru_6
moschip.ru_9