USF 0402

Surface Mount Fuse, 1.05 x 0.55 mm, Super-Quick-Acting FF, 32 VDC

UL 248-14 · 32 VDC · Super-Quick-Acting FF

See below:
Approvals and Compliances

Description
- UL characteristic
- Low melting I²t-values, fast interruption
- Marking optional
- Impermeable to potting compound

Unique Selling Proposition
- Space constrained applications

Applications
- Secondary Protection
- Circuits without inrush
- Semiconductor protection
- Digital Consumer Electronics

References
Packaging Details

Weblinks
pdf data sheet, html datasheet, General Product Information, Packaging details, Distributor-Stock-Check, Detailed request for product, Microsite

Technical Data

Rated Voltage	32 VDC
Rated current	0.25 - 5 A
Breaking Capacity	35 A
Characteristic	Super-Quick-Acting FF
Mounting	PCB,SMT
Admissible Ambient Air Temp.	-55 °C to 90 °C
Climatic Category	55/125/21 acc. to IEC 60068-1
Material: Housing	Thermoset
Material: Terminals	Gold-Plated Copper Alloy
Unit Weight	0.004 g
Storage Conditions	0 °C to 60 °C, max. 70% r.h.
Product Marking	see table of variants

Soldering Methods	Reflow Soldering Profile
Solderability	245 °C / 3 sec acc. to IEC 60068-2-58, Test Td
Resistance to Soldering Heat	260 +0/-5 °C / 30 sec acc. to IPC/JEDEC J-STD-020D, Level 1
Moisture Sensitivity Level	MSL 1, J-STD-020
Case Resistance	acc. to EIA/IS-722, Test 4.7 >100 MΩ (between leeds and body)
Flammability	min. UL 94V-1 (acc. to EIA/IS-722, Test 4.12)
Moisture Resistance Test	MIL-STD-202, Method 106 (50 cycles in a temp./mister chamber)
Resistance to Solvents	MIL-STD-202, Method 215
Terminal Strength	MIL-STD-202, Method 211A (Deflection of board 1 mm for 1 minute)

Approvals and Compliances

Detailed information on product approvals, code requirements, usage instructions and detailed test conditions can be looked up in Details about Approvals

SCHURTER products are designed for use in industrial environments. They have approvals from independent testing bodies according to national and international standards. Products with specific characteristics and requirements such as required in the automotive sector according to IATF 16949, medical technology according to ISO 13485 or in the aerospace industry can be offered exclusively with customer-specific, individual agreements by SCHURTER.

Approvals

The approval mark is used by the testing authorities to certify compliance with the safety requirements placed on electronic products.

Approval Reference Type: USF 0402

Approval Logo	Certificates	Certification Body	Description
	UL Approvals	UL	UL File Number: E41599
	CSA Approvals	CSA	CSA Certification Record: 248899

Product standards

Product standards that are referenced

Organization	Design	Standard	Description
	Designed according to	UL 248-14	Low voltage fuses - Part 14: Additional fuses
	Designed according to	CSA22.2 No. 248.14	Low-Voltage Fuses - Part 14: Supplemental Fuses

Application standards

Application standards where the product can be used

Organization	Design	Standard	Description
	Designed for applications acc.	IEC/UL 62368-1	IEC 62368-1 includes the basic requirements for safety of audio, video, information technology and office equipment.

Compliances

The product complies with following Guide Lines

Identification	Details	Initiator	Description
	RoHS	SCHURTER AG	Directive RoHS 2011/65/EU, Amendment (EU) 2015/863
	Halogen Free	SCHURTER AG	SCHURTER strives to offer our customers halogen free products.
	REACH	SCHURTER AG	On 1 June 2007, Regulation (EC) No 1907/2006 on the Registration, Evaluation, Authorization and Restriction of Chemicals 1 (abbreviated as "REACH") entered into force.

Dimension [mm]

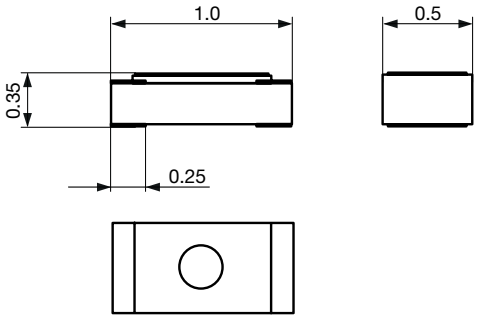

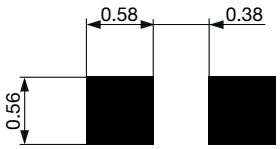

Soldering pads

Derating Curves

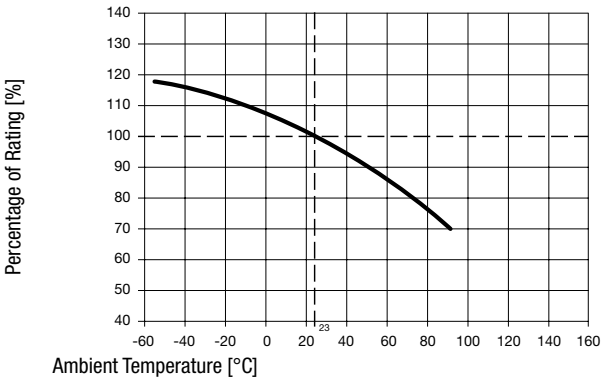

Pre-Arcing Time

Rated Current In	1.0 x In min	2.0 x In max	3.0 x In max
0.25 A	4 h	-	5 s
0.375 A - 5 A	4 h	5 s	0.2 s

Time-Current-Curves

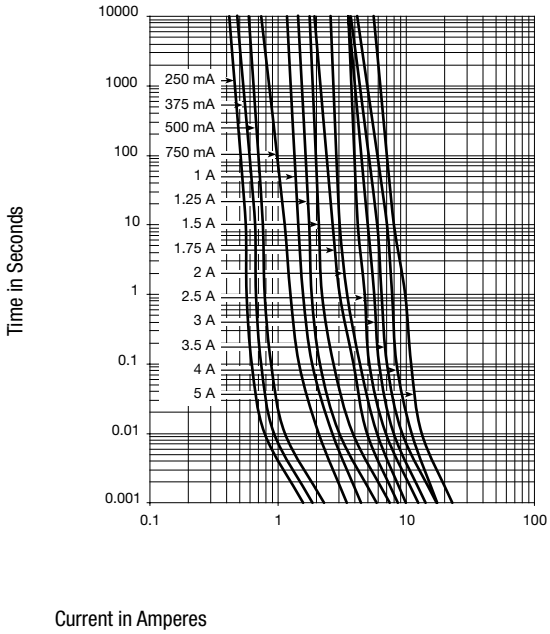

All Variants

Rated Current [A]	Rated Voltage [VDC]	Marking	Breaking Capacity	Power Dissipation 1.0 I_n typ. [mW]	Voltage Drop 1.0 I_n typ. [mV]	Cold Resistance typ. [mΩ]	Melting I^2t at 1 ms typ. [A^2s]			Order Number
0.25	32		1)	23	92	360	0.0025	●	●	3414.0111.26
0.375	32		1)	32	85	193	0.0035	●	●	3414.0112.26
0.5	32		1)	47	93	160	0.0053	●	●	3414.0113.26
0.75	32		1)	76	102	105	0.012	●	●	3414.0114.26
1	32		1)	87	88	73	0.02	●	●	3414.0115.26
1.25	32		1)	120	96	60	0.035	●	●	3414.0116.26
1.5	32		1)	130	87	47	0.056	●	●	3414.0117.26
1.75	32		1)	142	81	39	0.075	●	●	3414.0118.26
2	32		1)	141	71	30	0.1	●	●	3414.0119.26
2.5	32		1)	138	55	20	0.156	●	●	3414.0120.26
3	32		1)	187	61	17	0.2032	●	●	3414.0121.26
3.5	32		1)	202	58	15	0.3017	●	●	3414.0122.26
4	32		1)	228	57	10.5	0.3084	●	●	3414.0123.26
5	32		1)	262	52	8.5	0.531	●	●	3414.0124.26

1) 35 A @ 32 VDC

Availability for all products can be searched real-time:https://www.schurter.com/en/Stock-Check/Stock-Check-SCHURTER

Packaging Unit .xx = .26 Blister Tape 33 cm Reel (10000 pcs.)

12.05.2020

The specifications, descriptions and illustrations indicated in this document are based on current information. All content is subject to modifications and amendments. Information furnished is believed to be accurate and reliable. However, users should independently evaluate the suitability and test each product selected for their own applications.

Общество с ограниченной ответственностью «МосЧип» ИНН 7719860671 / КПП 771901001
Адрес: 105318, г.Москва, ул.Щербаковская д.3, офис 1107

Данный компонент на территории Российской Федерации

Вы можете приобрести в компании MosChip.

Для оперативного оформления запроса Вам необходимо перейти по данной ссылке:

http://moschip.ru/get-element

Вы можете разместить у нас заказ для любого Вашего проекта, будь то серийное производство или разработка единичного прибора.

В нашем ассортименте представлены ведущие мировые производители активных и пассивных электронных компонентов.

Нашей специализацией является поставка электронной компонентной базы двойного назначения, продукции таких производителей как XILINX, Intel (ex.ALTERA), Vicor, Microchip, Texas Instruments, Analog Devices, Mini-Circuits, Amphenol, Glenair.

Сотрудничество с глобальными дистрибьюторами электронных компонентов, предоставляет возможность заказывать и получать с международных складов практически любой перечень компонентов в оптимальные для Вас сроки.

На всех этапах разработки и производства наши партнеры могут получить квалифицированную поддержку опытных инженеров.

Система менеджмента качества компании отвечает требованиям в соответствии с ГОСТ Р ИСО 9001, ГОСТ РВ 0015-002 и ЭС РД 009

Офис по работе с юридическими лицами:

105318, г.Москва, ул.Щербаковская д.3, офис 1107, 1118, ДЦ «Щербаковский»

Телефон: +7 495 668-12-70 (многоканальный)

Факс: +7 495 668-12-70 (доб.304)

E-mail: info@moschip.ru

Skype отдела продаж:
moschip.ru
moschip.ru_4
moschip.ru_6
moschip.ru_9