REVISIONS			
REV	ECN, ERN NO.	DATE	APPRD.
A	PROPOSAL DRAWING	JULY. 17,2012	L.CHAN
B	PROPOSAL DRAWING	OCT. 31,2012	L.CHAN

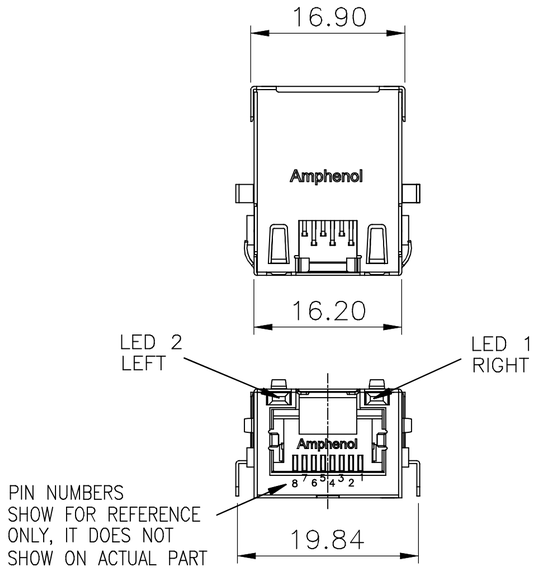

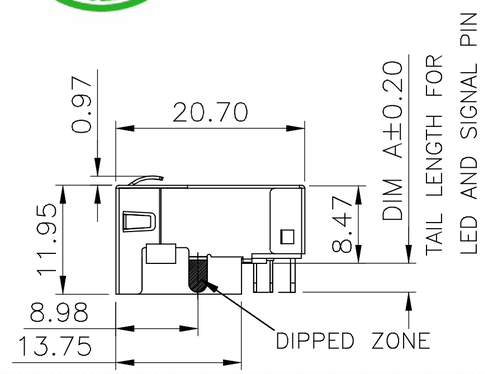

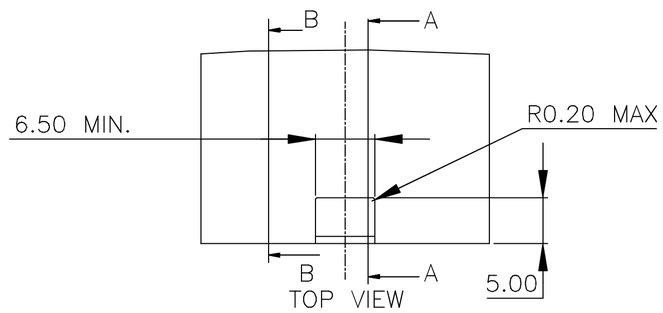

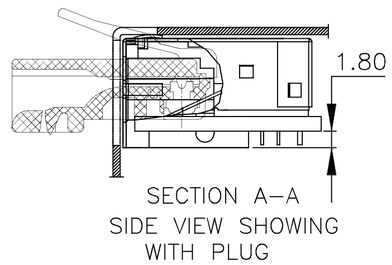

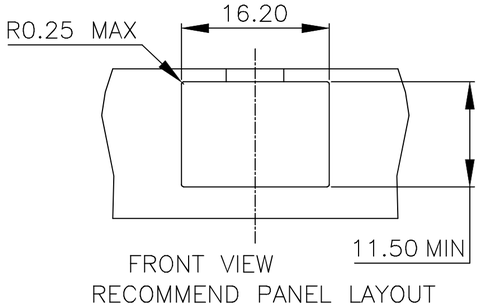

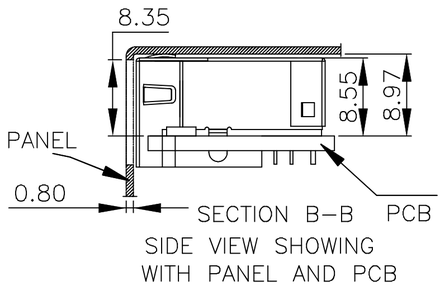

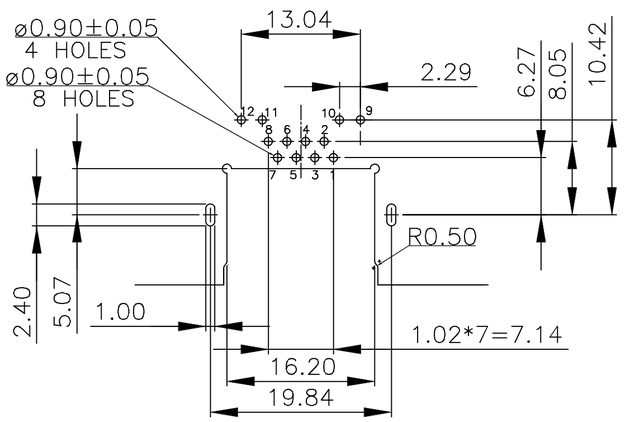

RECOMMENDED PCB LAYOUT
TOLERANCE: ±0.05mm.

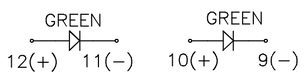

LED SCHEMATIC

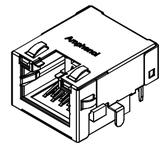

NOTES:

ELECTRICAL:

1. VOLTAGE RATING : 125 VAC.
2. CURRENT RATING : 1.25 AMP.
3. INSULATING RESISTANCE : 500 MEGOHMS MINIMUN.
4. DIELECTRIC STRENGTH : 1000 VAC 60Hz, 1MIN.
5. CATEGORY 6 CHARACTERISTIC:

Frequency	Near–End Crosstalk	Return Loss	Insertion loss
MHz	dB, MIN.	dB, MIN.	dB, MAX.
1.0	75.0	30.0	0.1
4.0	75.0	30.0	0.1
8.0	75.0	30.0	0.1
10.0	74.0	30.0	0.1
16.0	69.9	30.0	0.1
20.0	68.0	30.0	0.1
25.0	66.0	30.0	0.1
31.25	64.1	30.0	0.11
62.5	58.1	28.1	0.16
100.0	54.0	24.0	0.20
200.0	48.0	18.0	0.28
250.0	46.0	16.0	0.32

MECHANICAL:

1. SHIELD : STAINLESS STEEL, WITH TIN–DIP ON SOLDER TABS.
2. HOUSING : HIGH TEMP THERMOPLASTIC. UL 94V–0.
3. INSERT : HIGH TEMP THERMOPLASTIC UL 94V–0.
4. PCB : FR–4.
5. CONTACT : PHOSPHOR BRONZE.
   SELECTIVE GOLD PLATING FOR MATING SURFACE,
   SEE AMPHENOL PART NUMBER FOR DETAIL.
   50u" NICKEL UNDERPLATE
   100u'' MATTE TIN PLATING ON CONTACT SOLDER TAIL.

ENVIRONMENTAL:

1. STORAGE : –40° TO +85°.
2. OPERATION : –40° TO +85°.

MATES WITH MODULAR PLUG CONFORMING TO FCC PART 68, SUBPART F.

RECOMMENDED SOLDER PROCESS: WAVE SOLDER, PEAK TEMPERATURE 260° FOR 10 SECOND.

AMPHENOL PART NUMBER: RJE71–188–1XXX

GOLD PLATING OPTION
1=6u'' GOLD PLATING
2=15u'' GOLD PLATING
3=30u'' GOLD PLATING
4=50u'' GOLD PLATING

OPTIONS (SEE BELOW TABLE 1)
REFER TO LED OPTIONS DRAWING
FOR ORDERING CODES

TABLE 1

AMPHENOL P/N:	DIM A	RECOMMEND PCB THICKNESS
RJE711881XX1	3.18	2.36
RJE711881XX2	2.27	1.57
RJE711881XX3	2.16	1.57

UNLESS OTHERWUSE SOECIFIED
DIMENSION ARE IN mm
TOLERANCE ARE :

FRACTION	DECIMALs	ANGLEs
.X ±0.50	X° ±3.0°	
.XX ±0.30	.X° ±2.0°	
.XXX ±0.10	.XX° ±1.0°	

3rd ANGLE PROJECTION

		DATE
DRAWN	HUGH WANG	JULY 17.2012
DESIGNED	HUGH WANG	JULY 17.2012
CHECKED	L.CHAN	JULY 17.2012
I. E. APPRD.		
Q. A. APPRD.		
DWG. APPRD.	ADRIAN.G	JULY 17.2012
ENG. REL. NO.		
REF.		
DIMENSIONS ARE IN mm	CODE ID. NO. 03554	

Amphenol Canada Corp.

TITLE
MODULAR JACK, SINGLE PORT, 8 POSITIONS, 8 CONTACTS, SHIELDED WITH TOP & SIDE TABS, WITH LED, SINK PCB TYPE, TAB UP, CAT6

DWG	DRAWING NO.	REV.
C	P–RJE71–188–1XXX	B

SCALE 4/1 | WT. ––––– | SURF. –––– | SHEET 1 OF 1

THIS DOCUMENT CONTAINS PROPRIETARY INFORMATION AND SUCH INFORMATION MAY NOT BE DISCLOSED TO OTHERS FOR ANY PURPOSE OR USED FOR MANUFACTURING PURPOSES WITHOUT WRITTEN PERMISSION FROM AMPHENOL CANADA CORP.

REVISIONS			
REV	ECN, ERN NO.	DATE	APPRD.
A	PROPOSAL DRAWING	OCT. 30,2012	L.CHAN

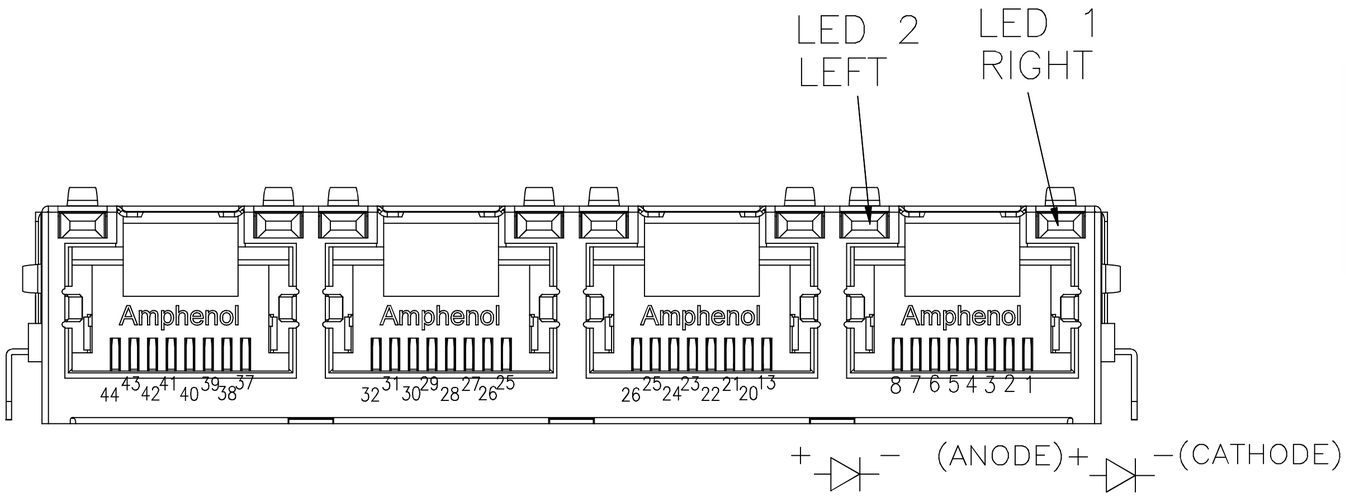

TYPICAL FOR SINGLE & MULTI−PORT

LED SPECIFICATIONS:
FORWARD VOLTAGE: 2.1 VOLTS TYP.
REVERSE VOLTAGE: 5.0 VOLTS MIN.
LUMINOUS INTENSITY: 0.5 mCd MIN.
(AT If=2mA)
STORAGE TEMPERATURE: −40° TO 85° C
LEAD SOLDERING TEMPERATURE: 260° C
(5 SEC, 1/16" FROM CASE)
PLATING ON TAILS: TIN OR TIN/COPPER
ALLOY OVER SILVER

EXAMPLE:
PART NUMBER RJE71−488−1XXX
LED COLOR CODE

PRIMARY COLOR FOR BI−COLOR
LEDS IN STANDARD ANODE/
CATHODE CONFIGURATION IS:
RED−GREEN= RED
RED−YELLOW= RED
GREEN−YELLOW= GREEN
GREEN−ORANGE= GREEN

CODE	LED 2 (LEFT)	LED 1 (RIGHT)	CODE	LED 2 (LEFT)	LED 1 (RIGHT)	CODE	LED 2 (LEFT)	LED 1 (RIGHT)
0	BLOCKED	BLOCKED	9	GREEN	BLOCKED	J	BiC RD/GR	YELLOW
1	YELLOW	GREEN	A	BiC GR/YE	BiC GR/YE	K	YELLOW	BiC GR/OR
2	BLOCKED	GREEN	B	BiC RD/GR	BiC RD/GR	L	BiC GR/YE	RED
3	YELLOW	BLOCKED	C	BiC RD/GR	BiC GR/YE	M	RED	YELLOW
4	GREEN	YELLOW	D	GREEN	BiC GR/YE	P	GREEN	BiC RD/GR
5	GREEN	GREEN	E	YELLOW	BiC GR/YE	R	BiC GR/OR	GREEN
6	YELLOW	YELLOW	F	BiC GR/YE	YELLOW	T	RED	RED
7	RED	GREEN	G	BiC GR/OR	BiC GR/OR	V	BiC RD/GR	GREEN
8	GREEN	RED	H	BiC GR/YE	GREEN			

LEGEND
BiC=BI−COLOR LED
LOWC=LOW CURRENT LED
YE=YELLOW
GR=GREEN
RD=RED
OR=ORANGE

NOTE:
THE TWO DIGITS PRECEDING THE ADDITIONAL LED CODE MUST BE USED IN THE PART NUMBER, WHEN ORDERING ANY OF THE ADDITIONAL LED OPTIONS.

THIS DOCUMENT CONTAINS PROPRIETARY INFORMATION AND SUCH INFORMATION MAY NOT BE DISCLOSED TO OTHERS FOR ANY PURPOSE OR USED FOR MANUFACTURING PURPOSES WITHOUT WRITTEN PERMISSION FROM AMPHENOL CANADA CORP.

UNLESS OTHERWUSE SOECIFIED
DIMENSION ARE IN mm
TOLERANCE ARE :

FRACTION	DECIMALs	ANGLEs
.X ±0.50		X° ±3.0°
.XX ±0.30		.X° ±2.0°
.XXX ±0.10		.XX° ±1.0°

3rd ANGLE PROJECTION

		DATE
DRAWN	HUGH WANG	OCT 30.2012
DESIGNED	HUGH WANG	OCT 30.2012
CHECKED	L.CHAN	OCT 30.2012
I. E. APPRD.		
Q. A. APPRD.		
DWG. APPRD.	ADRIAN.G	OCT 30.2012
ENG. REL. NO.		
REF.		
DIMENSIONS ARE IN mm	CODE ID. NO. 03554	

Amphenol Canada Corp.

TITLE
LED OPTIONS FOR RJE71, SINGLE OR MULTI−PORT CONNECTORS

DWG	DRAWING NO.	REV.
C	P−RJE71−LEDs	A

SCALE 4/1 | WT. −−−−− | SURF. −−−− | SHEET 1 OF 1

Общество с ограниченной ответственностью «МосЧип» ИНН 7719860671 / КПП 771901001
Адрес: 105318, г.Москва, ул.Щербаковская д.3, офис 1107

Данный компонент на территории Российской Федерации

Вы можете приобрести в компании MosChip.

Для оперативного оформления запроса Вам необходимо перейти по данной ссылке:

http://moschip.ru/get-element

Вы можете разместить у нас заказ для любого Вашего проекта, будь то серийное производство или разработка единичного прибора.

В нашем ассортименте представлены ведущие мировые производители активных и пассивных электронных компонентов.

Нашей специализацией является поставка электронной компонентной базы двойного назначения, продукции таких производителей как XILINX, Intel (ex.ALTERA), Vicor, Microchip, Texas Instruments, Analog Devices, Mini-Circuits, Amphenol, Glenair.

Сотрудничество с глобальными дистрибьюторами электронных компонентов, предоставляет возможность заказывать и получать с международных складов практически любой перечень компонентов в оптимальные для Вас сроки.

На всех этапах разработки и производства наши партнеры могут получить квалифицированную поддержку опытных инженеров.

Система менеджмента качества компании отвечает требованиям в соответствии с ГОСТ Р ИСО 9001, ГОСТ РВ 0015-002 и ЭС РД 009

Офис по работе с юридическими лицами:

105318, г.Москва, ул.Щербаковская д.3, офис 1107, 1118, ДЦ «Щербаковский»

Телефон: +7 495 668-12-70 (многоканальный)

Факс: +7 495 668-12-70 (доб.304)

E-mail: info@moschip.ru

Skype отдела продаж:
moschip.ru
moschip.ru_4
moschip.ru_6
moschip.ru_9