Current Limiting

Current limiting HV fuse links split into three internationally recognised types: **back-up** (or **partial range**) fuse links, which will interrupt any current from their rated breaking capacity down to a minimum breaking current specified by the manufacturer; and **general purpose** fuse links, which will interrupt all currents from rated breaking capacity down to a current that will melt the elements within one hour. A third type is the full range fuse. This term applies to fuse links that can interrupt any current below the rated breaking capacity that melts the fuse elements satisfactorily.

Current limiting **back-up fuse links** are the closest in construction to LV cartridge types. However, a longer strip element with many more restrictions is necessary to produce the large number of series arcs needed to interrupt a high voltage. Fuse manufacturers achieve this by coiling the element around a ceramic core with a star shaped cross section. In this way, a 1m long element can be fitted into a 250mm long fuse body. If the adjacent coils are too close, there will be a flashover between them and this sets a practical limit on how long an element can be crammed into a particular cartridge, and how many elements can be used in parallel.

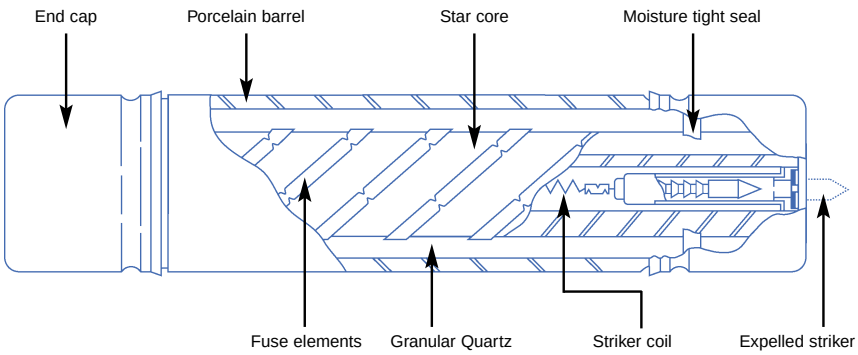

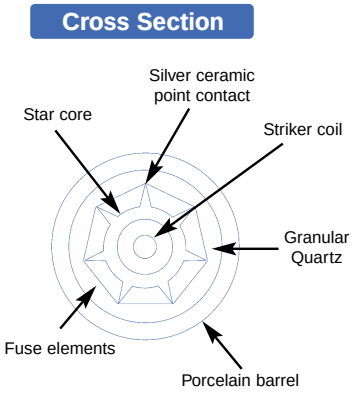

Like an LV cartridge fuse link, an HV fuse link of this type has a ceramic body.

Many HV current limiting fuse links are also fitted with a **striker mechanism**. This not only provides the user with a visual indication that the fuse link has operated, but can also be used to operate other switchgear. In this way, a fuse on a single phase system can cut off all three phases if a fault occurs.

Striker mechanisms are driven by explosive charges or compressed springs. Both are triggered by a thin fuse wire running the length of the fuse, usually through the centre of the star shaped core. The wire is connected in parallel with the elements, so a current flows through it when the elements melt. The current heats up the wire and detonates the explosive charge, or melts the wire andreleases the spring, pushing the striker pin out of the fuse link's end cap. A lock washer mechanism makes it impossible to push the pin back into the fuse body.

There are several variations on this design for specific applications. For example, the elements in three-phase motor protection fuse links are corrugated to withstand the cyclical mechanical stresses induced by the high starting and stopping currents drawn by the motor.

Non- Current Limiting

Essentially, non-current limiting fuse links have short elements and incorporate some means of lengthening the arc after the element melts, extinguishing the arc and preventing re-ignition. There are two distinct types: **expulsion fuse links** and **liquid fuse links**.
Expulsion fuses are an effective way of protecting overhead distribution lines and transformers. They are designed for outdoor use only and comprise a tin or copper fuse element in series with a flexible braid in a tube. The tube forms one side of a triangle, with a latched connection at the top and a hinge at the bottom. The braid emerges from one end of the fuse link and is held in tension by a spring.
When the element melts, the braid is no longer under tension, the latch is released and the fuse swings downwards under gravity, breaking the circuit. As the fuse swings downwards, the arc is lengthened, extinguished and prevented from restriking.
Liquid fuse links are based on early non-current limiting fuse links which use liquids to quench the arc. The fuse element is anchored to the top ferrule of a glass tube filled with a quenching liquid - usually a hydrocarbon. The rest of the tube is filled with a spring that holds the element - or a strain wire in very high voltage fuse links - in tension.
When the element melts, the spring pulls the two parts of the element apart, extending the arc and quenching it in the liquid.

M- effect

Bussmann high voltage fuse links include M-effect as a design feature to enhance performance. M-effect (named after its discoverer, Prof. Metcalf, in the late 1930s) consists of applying overlay spots of special low melting alloy onto the fuse element strips. Its effect is to ensure that the fuse link runs cooler in service and that the maximum temperature reached during fuse operation is kept down to a modest 160 deg. C (compared with 300 - 400 deg C for fuse links which do not employ this feature).

M-effect has been in widespread use in both low voltage and high voltage fuse links of British design for many years and is now coming into use in many other countries. Cooler running M-effect fuse links have longer service life since lower surface temperature on the elements ensures against long term embrittlement of the material. The M-effect spots are stable and have been proved by many tests to remain inert for periods of 30 years or more.

The low maximum operating temperature of M-effect fuse links ensures safe operation of Back-up types in striker tripped switchgear under low fault conditions. Whereas non M-effect types are known to have a risk of body fracture because of their much higher body temperature under such conditions. The low maximum operating temperature also ensures against damage to heat sensitive fuse enclosures such as cast resin fuse pods.

In short, M-effect fuse links are safer, give better protection and are longer lasting than alternative designs which do not employ this valuable feature.

- **Fuse Links comply with DIN dimensional standard DIN43625.**
- **'F' range, high performance full range fuse link.**
- **'S' range, high performance back-up fuse link, with striker tripping.**
- **'A' range, including high current rating back-up fuse link.**
- **Comply with IEC 60282-1 and VDE 0670 part 4.**
- **Wide variety of ratings, 3.6 kV to 36 kV.**
- **Versions suitable for indoor and outdoor use.**
- **Motor circuit fuse link option.**

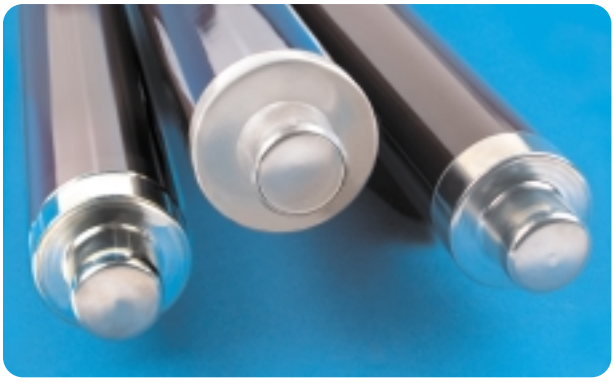

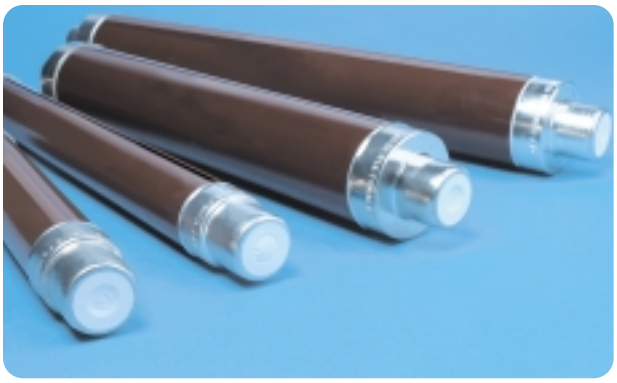

Bussmann DIN 'S' Fuse Links

The time current characteristics of the 'S' range is optimised to ensure improved discrimination with upstream devices and to give fast clearance of earth faults in the secondary terminal zones. The breaking performance with low over currents is adequate to cater for all normal distribution applications, where low voltage fuse links on the secondary side take care of low overload faults, leaving the high voltage fuse links to clear major faults ahead of LV protection. The fuse links are suitable for use even where there is no secondary LV protection, provided that they are used in fuse switches fitted with instantaneous striker tripping.

Bussmann DIN 'F' Fuse Links

The 'F' range fuse links have 'full range' clearing capability. Bussmann 'F' types are designed to clear all overloads right down to fuse's rated current in accordance with latest IEC 282-1 requirements. They are thus suitable for use as a sole form of protection. 'F' range time current characteristics are especially advantageous for transformer protection applications.

Bussmann DIN 'A' Fuse Links

This earlier, well proven design, has values of minimum breaking current between the 'S' and 'F' range including higher current ratings.

Table of ratings for 'S' range 7.2 - 36kV to DIN dimensions

Part Number	Voltage Rating	Current Rating	Breaking Capacity	Minimum Breaking Current	Cold resistance and watts loss in free air at rated current		Joule Intergral (I^2t)		Length	Diameter Ø	Weight
	U_n	I_n	I_1	I_3			A^2s				
	kV	A	kA	A	m Ω	W	Minimum Pre-Arcing	Maximum Total Clearing	mm	mm	kg
7.2SDLSJ6.3	7.2	6.3	40	20	205	11	$4.8X10^1$	$6.5X10^2$	292	50.8	1.63
7.2SDLSJ10	7.2	10	40	31	99.7	19	$2.5X10^2$	$2.7X10^3$	292	50.8	1.63
7.2SDLSJ16	7.2	16	40	49	65.1	23	$5.5X10^2$	$8.2X10^3$	292	50.8	1.63
7.2SDLSJ20	7.2	20	40	49	48.9	27	$9.7X10^2$	$1.1X10^4$	292	50.8	1.63
7.2SDLSJ25	7.2	25	40	80	32.6	28	$5.7X10^2$	$8.0X10^3$	292	50.8	1.63
7.2SDLSJ31.5	7.2	31.5	40	100	26.0	36	$8.9X10^2$	$1.0X10^4$	292	50.8	1.63
7.2SDLSJ40	7.2	40	40	114	16.0	36	$2.0X10^2$	$2.2X10^4$	292	50.8	1.63
7.2SDLSJ50	7.2	50	40	143	12.9	46	$3.2X10^2$	$3.2X10^4$	292	50.8	1.63
7.2SDLSJ63	7.2	63	40	180	8.14	45	$8.0X10^2$	$7.5X10^4$	292	50.8	1.63
7.2SFLSJ80	7.2	80	40	264	6.01	54	$5.0X10^3$	$6.5X10^4$	292	76.2	3.1
7.2SFLSJ100	7.2	100	40	338	4.65	64	$9.1X10^3$	$1.1X10^5$	292	76.2	3.1
7.2SFLSJ125	7.2	125	40	375	3.60	79	$1.5X10^4$	$1.7X10^5$	292	76.2	3.1
7.2SFLSJ160	7.2	160	40	525	2.73	97	$3.0X10^4$	$3.1X10^5$	292	76.2	3.1
12SDLSJ6.3	12	6.3	50	20	285	14	$7.0X10^1$	$6.5X10^2$	292	50.8	1.63
12SDLSJ10	12	10	50	28	143	18	$3.1X10^2$	$2.7X10^3$	292	50.8	1.63
12SDLSJ16	12	16	50	35	81.4	26	$9.8X10^2$	$8.6X10^3$	292	50.8	1.63
12SDLSJ20	12	20	50	72	54.6	28	$5.7X10^2$	$5.1X10^3$	292	50.8	1.63
12SDLSJ25	12	25	50	90	43.7	35	$8.9X10^2$	$8.1X10^4$	292	50.8	1.63
12SDLSJ31.5	12	31.5	50	90	32.8	43	$1.6X10^3$	$1.5X10^4$	292	50.8	1.63
12SDLSJ40	12	40	50	128	21.6	49	$3.2X10^3$	$2.7X10^4$	292	50.8	1.63
12SDLSJ50	12	50	50	196	15.1	59	$1.3X10^3$	$3.2X10^4$	292	50.8	1.63
12SDLSJ63	12	63	50	275	12.1	75	$2.3X10^3$	$5.7X10^4$	292	50.8	1.63
12SFLSJ50	12	50	50	160	17.1	61	$5.2X10^3$	$4.1X10^4$	292	76.2	3.1
12SFLSJ63	12	63	50	227	12.1	69	$1.0X10^4$	$8.8X10^4$	292	76.2	3.1
12SFLSJ80	12	80	50	256	8.97	88	$1.9X10^4$	$1.5X10^5$	292	76.2	3.1
12SFLSJ100	12	100	50	446	5.61	83	$1.4X10^4$	$2.2X10^5$	292	76.2	3.1
12SKLSJ125	12	125	50	870	4.60	115	$2.8X10^4$	$2.3X10^5$	292	76.2	3.1
12SXLEJ160	12	160	63	500	4.30	200	$1.1X10^5$	$5.0X10^5$	292	88	3.7
12SXLEJ200	12	200	63	610	3.80	330	$1.5X10^5$	$6.5X10^5$	292	88	3.7
15.5SFMSJ100	15.5	100	25	707	8.23	119	$1.2X10^4$	$1.4X10^5$	442	76.2	4.5
15.5SKMSJ125	15.5	125	25	990	5.61	126	$2.4X10^4$	$2.2X10^5$	442	76.2	4.5
17.5SDLSJ6.3	17.5	6.3	35.5	23	313	15	$4.8X10^1$	$6.1X10^2$	292	50.8	1.63
17.5SDLSJ10	17.5	10	35.5	19	185	23	$2.8X10^2$	$4.0X10^3$	292	50.8	1.63
17.5SDLSJ16	17.5	16	35.5	59	104	34	$2.9X10^2$	$2.0X10^3$	292	50.8	1.63
17.5SDLSJ20	17.5	20	35.5	80	69.2	38	$5.7X10^2$	$4.4X10^3$	292	50.8	1.63
17.5SDLSJ25	17.5	25	35.5	100	55.4	48	$8.9X10^2$	$6.6X10^3$	292	50.8	1.63
17.5SDLSJ31.5	17.5	31.5	35.5	118	41.4	58	$5.1X10^2$	$1.1X10^4$	292	50.8	1.63
17.5SDLSJ40	17.5	40	35.5	148	31.1	76	$8.0X10^2$	$1.8X10^4$	292	50.8	1.63
17.5SFLSJ31.5	17.5	31.5	35.5	118	30.3	37	$2.6X10^3$	$1.9X10^4$	292	76.2	3.1
17.5SFLSJ40	17.5	40	35.5	132	21.9	51	$5.1X10^3$	$3.8X10^4$	292	76.2	3.1
17.5SFLSJ50	17.5	50	35.5	225	17.3	62	$8.1X10^3$	$6.0X10^4$	292	76.2	3.1
17.5SDMSJ6.3	17.5	6.3	35.5	16	509	26	$4.8X10^1$	$6.0X10^2$	442	50.8	2.2
17.5SDMSJ10	17.5	10	35.5	27	215	28	$3.1X10^2$	$3.8X10^3$	442	50.8	2.2
17.5SDMSJ16	17.5	16	35.5	57	112	37	$2.9X10^2$	$1.2X10^4$	442	50.8	2.2
17.5SDMSJ20	17.5	20	35.5	80	79.8	38	$5.7X10^2$	$6.7X10^3$	442	50.8	2.2
17.5SDMSJ25	17.5	25	35.5	100	63.8	52	$8.9X10^2$	$1.1X10^4$	442	50.8	2.2
17.5SDMSJ31.5	17.5	31.5	35.5	100	47.9	61	$1.6X10^3$	$2.0X10^4$	442	50.8	2.2
17.5SDMSJ40	17.5	40	35.5	143	31.6	66	$3.2X10^3$	$3.6X10^4$	442	50.8	2.2
17.5SFMSJ50	17.5	50	35	180	25.0	88	$5.2X10^3$	$5.5X10^4$	442	76.2	4.5
17.5SFMSJ63	17.5	63	35	240	17.8	102	$1.0X10^4$	$1.2X10^5$	442	76.2	4.5
17.5SFMSJ80	17.5	80	35	270	13.1	128	$1.9X10^4$	$1.9X10^5$	442	76.2	4.5
24SDMSJ6.3	24	6.3	50	19	489	24	$8.1X10^1$	$1.3X10^3$	442	50.8	2.2
24SDMSJ10	24	10	50	28	287	35	$3.1X10^2$	$5.5X10^3$	442	50.8	2.2
24SDMSJ16	24	16	50	47	165	60	$9.8X10^2$	$1.5X10^4$	442	50.8	2.2
24SDMSJ20	24	20	50	80	79.3	38	$8.1X10^2$	$1.1X10^4$	442	50.8	2.2
24SDMSJ25	24	25	50	84	62.0	49	$1.3X10^3$	$2.0X10^4$	442	50.8	2.2
24SDMSJ31.5	24	31.5	50	105	46.5	56	$2.1X10^3$	$2.9X10^4$	442	50.8	2.2
24SDMSJ40	24	40	50	140	34.0	79	$3.2X10^3$	$4.4X10^4$	442	50.8	2.2
24SFMSJ40	24	40	50	119	38.0	85	$5.1X10^3$	$6.9X10^4$	442	76.2	4.5
24SFMSJ50	24	50	50	225	27.1	96	$8.1X10^3$	$9.0X10^4$	442	76.2	4.5
24SFMSJ63	24	63	50	306	21.6	128	$3.8X10^3$	$5.0X10^4$	442	76.2	4.5
24SFMSJ71	24	71	50	350	17.7	134	$5.0X10^3$	$6.6X10^4$	442	76.2	4.5
24SHMEJ80	24	80	63	300	20.5	250	$1.7X10^4$	$8.4X10^4$	442	64	3.1
24SHMEJ100	24	100	63	350	18.0	350	$2.8X10^4$	$9.3X10^4$	442	64	3.1
24SKMEJ125	24	125	63	420	16.7	*171*	$2.4X10^4$	$8.7X10^4$	442	78	3.7
24SXMEJ160	24	160	63	320	14.0	*279*	$4.4X10^4$	$1.7X10^5$	442	88	4.2
36SDQSJ3.15	36	3.15	20	-	-	-	-	-	537	50.8	2.9
36SDQSJ6.3	36	6.3	35.5	23	684	34	$1.0X10^2$	$1.2X10^3$	537	50.8	2.9
36SDQSJ10	36	10	35.5	35	402	44	$3.1X10^2$	$3.6X10^3$	537	50.8	2.9
36SDQSJ16	36	16	35.5	70	165	52	$4.6X10^2$	$5.1X10^3$	537	50.8	2.9
36SDQSJ20	36	20	35.5	98	117	62	$8.9X10^2$	$8.2X10^4$	537	50.8	2.9
36SDQSJ25	36	25	35.5	112	98.0	85	$1.2X10^3$	$1.5X10^4$	537	50.8	2.9
36SFQSJ31.5	36	31.5	35.5	116	73.4	96	$2.1X10^3$	$2.3X10^4$	537	76.2	6.0
36SFQSJ40	36	40	35.5	178	52.4	116	$4.1X10^3$	$3.9X10^4$	537	76.2	6.0
36SFQSJ50	36	50	35.5	255	36.8	133	$8.3X10^3$	$8.1X10^4$	537	76.2	6.0
36SXQEJ63	36	63	20	280	35.0	271	$1.1X10^4$	$6.2X10^4$	537	88	6.5

Rating at 64%

Selection Tables

Table of ratings for 'F' range 12 - 24kV to DIN dimensions

Part Number	Voltage Rating	Current Rating	Breaking Capacity	Minimum Breaking Current	Cold resistance and watts loss in free air at rated current		Joule Intergral (I^2t)		Length	Diameter Ø	Weight
	U_n	I_n	I_1	I_3			A^2s				
	kV	A	kA	A	m Ω	W	Minimum Pre-Arcing	Maximum Total Clearing	mm	mm	kg
12FDLSJ6.3	12	6.3	50	6.3	208	10	$6.9X10^1$	$6.3X10^2$	292	50.8	1.63
12FDLSJ10	12	10	50	10	116	15	$2.2X10^2$	$2.1X10^3$	292	50.8	1.63
12FDLSJ16	12	16	50	16	55.4	17	$8.8X10^2$	$3.9X10^3$	292	50.8	1.63
12FDLSJ20	12	20	50	20	39.6	20	$1.7X10^3$	$7.6X10^3$	292	50.8	1.63
12FDLSJ25	12	25	50	25	31.2	26	$2.8X10^3$	$1.3X10^4$	292	25.8	1.63
12FDLSJ31.5	12	31.5	50	31.5	26.4	36	$2.6X10^3$	$1.3X10^4$	292	50.8	1.63
12FFLSJ40	12	40	50	40	19.7	42	$3.8X10^3$	$3.8X10^4$	292	76.2	3.16
12FFLSJ50	12	50	50	50	14.8	51	$6.8X10^3$	$5.6X10^4$	292	76.2	3.16
12FFLSJ63	12	63	50	63	12.4	72	$5.1X10^3$	$5.4X10^4$	292	76.2	3.16
12FXLSJ80	12	80	50	80	7.94	72	$2.2X10^4$	$1.1X10^5$	292	88	4
12FXLSJ100	12	100	50	100	5.64	82	$4.2X10^4$	$2.0X10^5$	292	88	4
24FDMSJ6.3	24	6.3	35.5	6.3	437	21	$6.8X10^1$	$5.4X10^2$	442	50.8	2.2
24FDMSJ10	24	10	35.5	10	218	29	$2.7X10^2$	$2.1X10^3$	442	50.8	2.2
24FDMSJ16	24	16	35.5	16	118	39	$8.2X10^2$	$2.7X10^3$	442	50.8	2.2
24FDMSJ20	24	20	35.5	20	82.2	43	$1.6X10^3$	$5.1X10^3$	442	50.8	2.2
24FDMSJ25	24	25	35.5	25	54.7	48	$3.4X10^3$	$1.2X10^4$	442	50.8	2.2
24FDMSJ31.5	24	31.5	35.5	31.5	48.6	71	$3.2X10^3$	$1.2X10^4$	442	50.8	2.2
24FFMSJ25	24	25	35.5	25	58.6	47	$3.4X10^3$	$1.1X10^4$	442	76.2	4.5
24FFMSJ31.5	24	31.5	35.5	31.5	48.8	70	$4.7X10^3$	$1.5X10^4$	442	76.2	4.5
24FFMSJ40	24	40	35.5	40	38.4	85	$7.6X10^3$	$2.5X10^4$	442	76.2	4.5
24FFMSJ45	24	45	35.5	45	31.4	92	$7.2X10^3$	$3.0X10^4$	442	76.2	4.5

Table of ratings for 'A' range 3.6 - 24kV to DIN dimensions

Part Number	Voltage Rating	Current Rating	Breaking Capacity	Minimum Breaking Current	Cold resistance and watts loss in free air at rated current		Joule Intergral (I^2t)		Length	Diameter Ø	Weight
	U_n	I_n	I_1	I_3			A^2s				
	kV	A	kA	A	m Ω	W	Minimum Pre-Arcing	Maximum Total Clearing	mm	mm	kg
3.6ADOSJ6.3	3.6	6.3	40	13	158	9	$4.5X10^1$	$1.9X10^2$	192	50.8	1.1
3.6ADOSJ10	3.6	10	40	31	79.2	11	$2.3X10^2$	$9.7X10^2$	192	50.8	1.1
3.6ADOSJ16	3.6	16	40	49	50.8	18	$5.5X10^2$	$2.4X10^3$	192	50.8	1.1
3.6ADOSJ20	3.6	20	40	49	38.1	21	$9.8X10^2$	$4.2X10^3$	192	50.8	1.1
3.6ADOSJ25	3.6	25	40	106	28.9	25	$1.3X10^2$	$1.2X10^3$	192	50.8	1.1
3.6ADOSJ31.5	3.6	31.5	40	106	19.2	26	$2.9X10^2$	$2.7X10^3$	192	50.8	1.1
3.6ADOSJ40	3.6	40	40	106	11.6	26	$8.0X10^2$	$7.5X10^3$	192	50.8	1.1
3.6ADLSJ6.3	3.6	6.3	40	13	158	9	$4.5X10^1$	$1.9X10^2$	292	50.8	1.63
3.6ADLSJ10	3.6	10	40	13	95.6	13	$1.3X10^2$	$5.4X10^2$	292	50.8	1.63
3.6ADLSJ16	3.6	16	40	20	63.3	22	$3.0X10^2$	$1.3X10^3$	292	50.8	1.63
3.6ADLSJ20	3.6	20	40	31	45.9	25	$6.3X10^2$	$2.7X10^3$	292	50.8	1.63
3.6ADLSJ25	3.6	25	40	106	28.7	25	$1.3X10^2$	$1.2X10^3$	292	50.8	1.63
3.6ADLSJ31.5	3.6	31.5	40	106	19.1	26	$2.9X10^2$	$2.7X10^3$	292	50.8	1.63
3.6ADLSJ40	3.6	40	40	106	11.4	25	$8.0X10^2$	$7.5X10^3$	292	50.8	1.63
12AILSJ100	12	100	31.5	176	5.03	70	$1.4X10^4$	$2.0X10^5$	292	76.2	3.3
17.5AILSJ40	17.5	40	25	78	26.3	58	$1.3X10^3$	$1.8X10^4$	292	76.2	3.3
17.5AILSJ50	17.5	50	25	98	21.1	73	$2.0X10^3$	$2.7X10^4$	292	76.2	3.3
17.5AILSJ63	17.5	63	25	156	12.3	68	$5.0X10^3$	$7.0X10^4$	292	76.2	3.3
17.5AIMSJ100	17.5	100	25	176	7.33	102	$1.4X10^4$	$2.0X10^5$	442	76.2	4.5
24AFMSJ50	24	50	20	137	29.5	102	$1.8X10^3$	$2.9X10^4$	442	76.2	4.5
24AFMSJ63	24	63	20	125	23.6	130	$3.2X10^3$	$4.5X10^4$	442	76.2	4.5
24AIMSJ71	24	71	20	176	15.1	106	$6.3X10^3$	$8.5X10^4$	442	76.2	4.5

Notes

a) 17.5kV fuse links in 10/12 dimensions are offered, since some switchgear in the 10/12 series is suitable for use at higher voltages.

b) Fuse links listed are normally for indoor use but versions suitable for outdoor use are olso available in the same ratings and dimensions. For outdoor versions of the '**S**' range, replace the '**S**' with a '**T**' when ordering - for example '**T**DLSJ'

c) * All the fuse link code references listed in the proceeding tables are for striker fitted versions, for non-striker versions please replace the letter '**S**' with the letter '**N**' in the code - for example 'SDL**N**J'. For further information on our parts referencing system, please refer to section 10 of this catalogue.

Time current characteristics for 7.2kV DIN Fuse Links, 'S' range, fuse types SDL, SFL

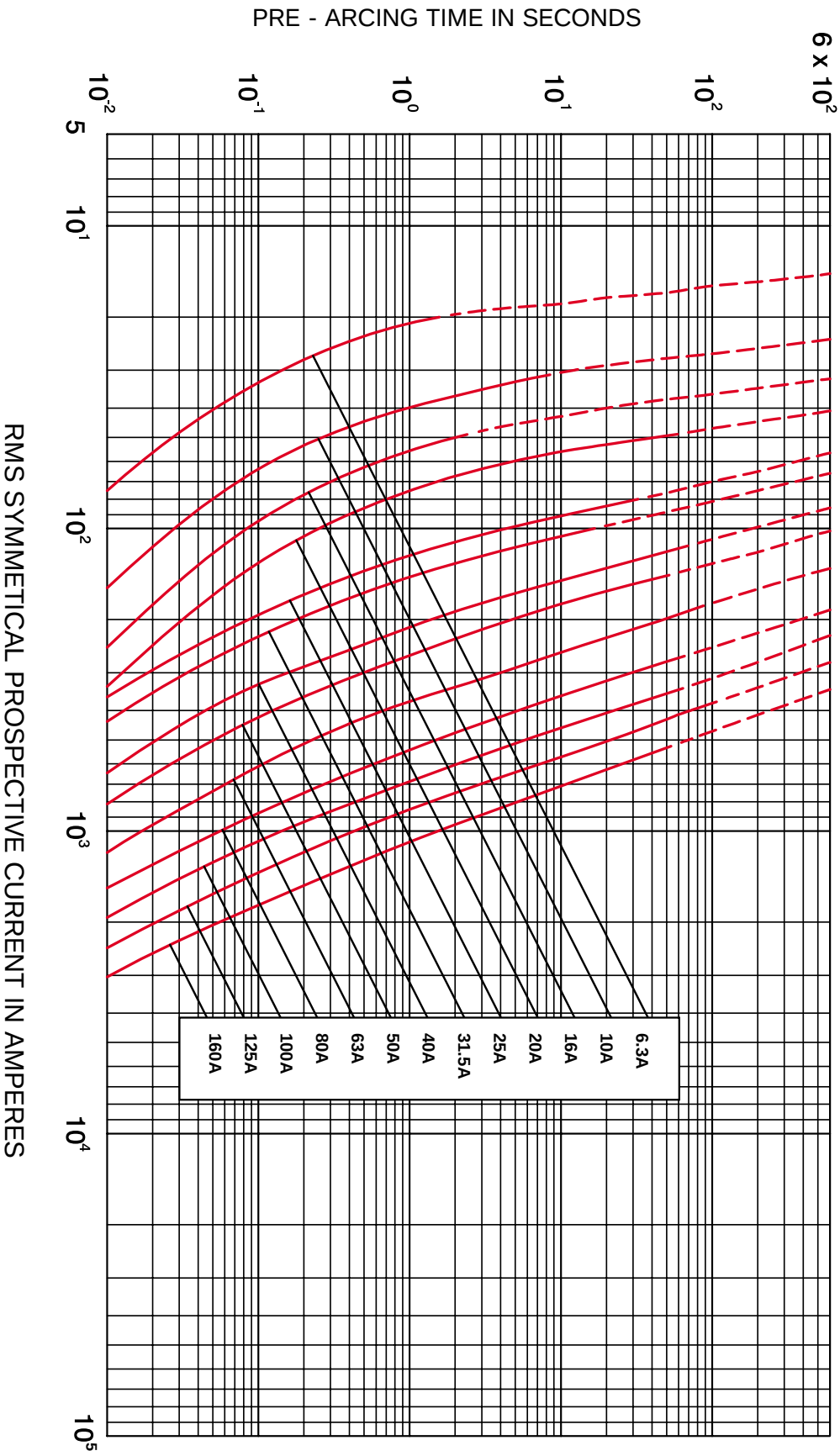

Time current characteristics for 12kV DIN Fuse Links, 'S' range, fuse types SDL, SFL, SKL and SXL

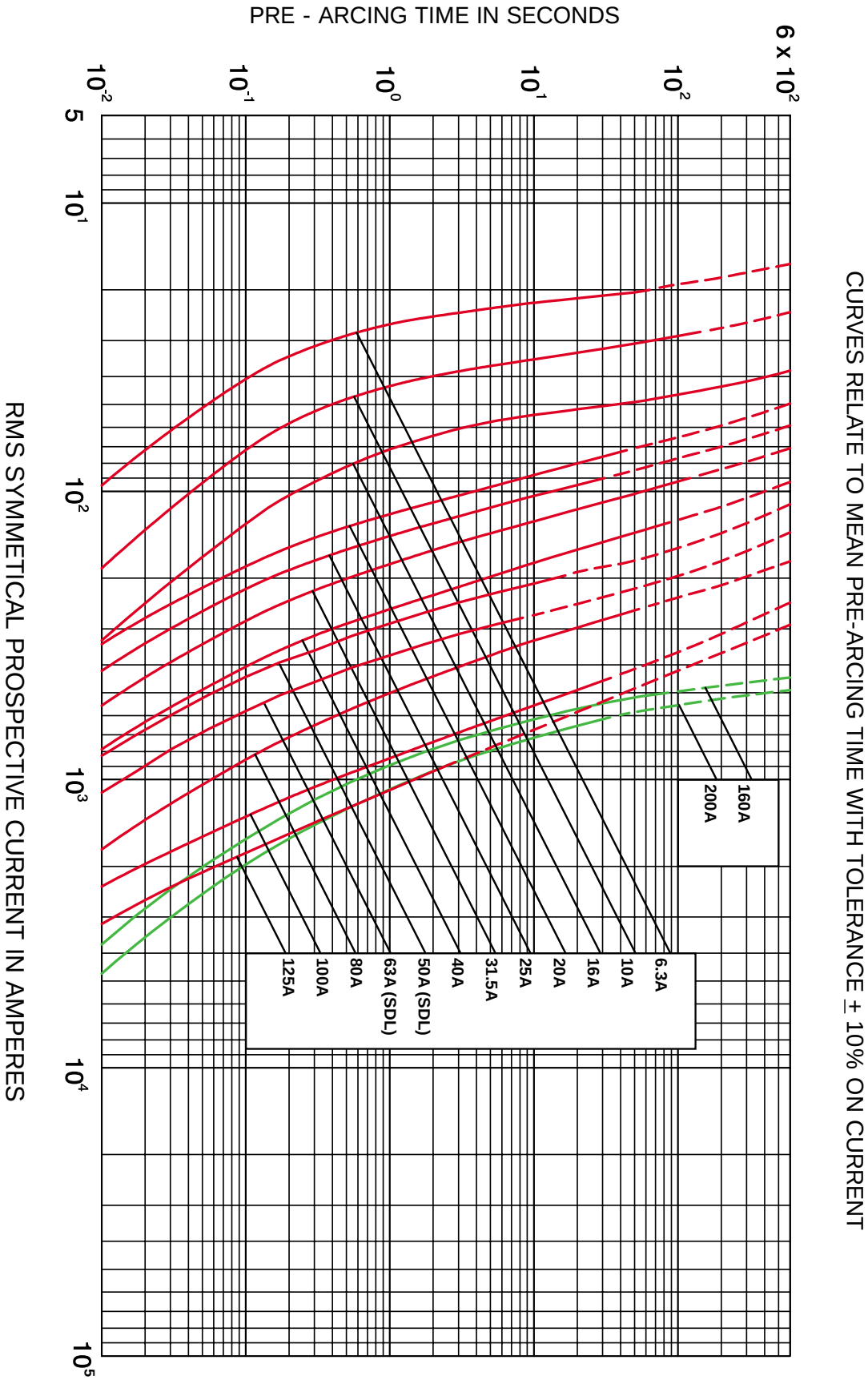

Time current characteristics for 15.5, 17.5kV DIN Fuse Links, 'S' range, fuse types SDL, SFL, SDM, SFM and SKM

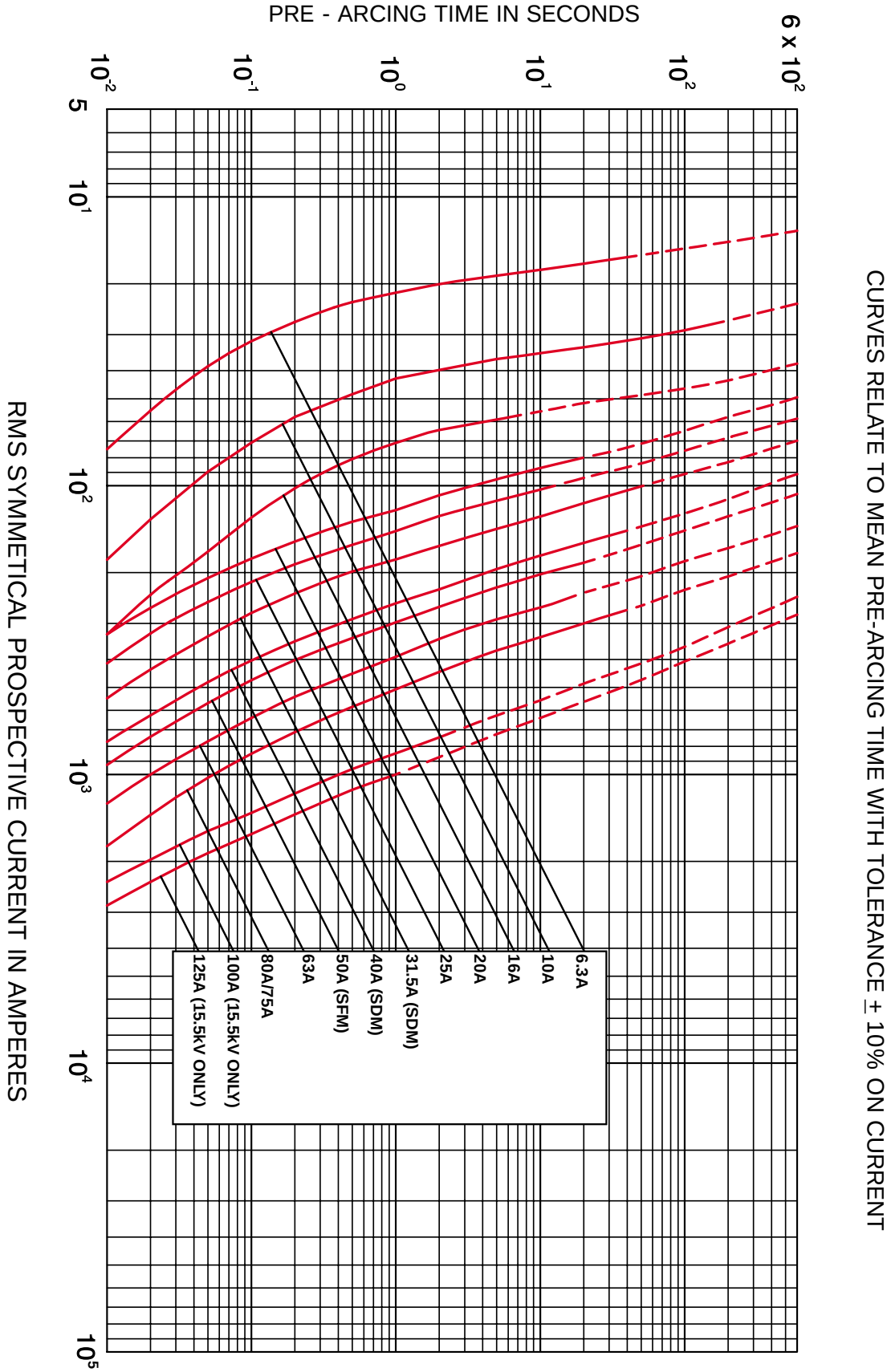

Time current characteristics for 24kV DIN Fuse Links, 'S' range, fuse types SDM, SXM and SFM

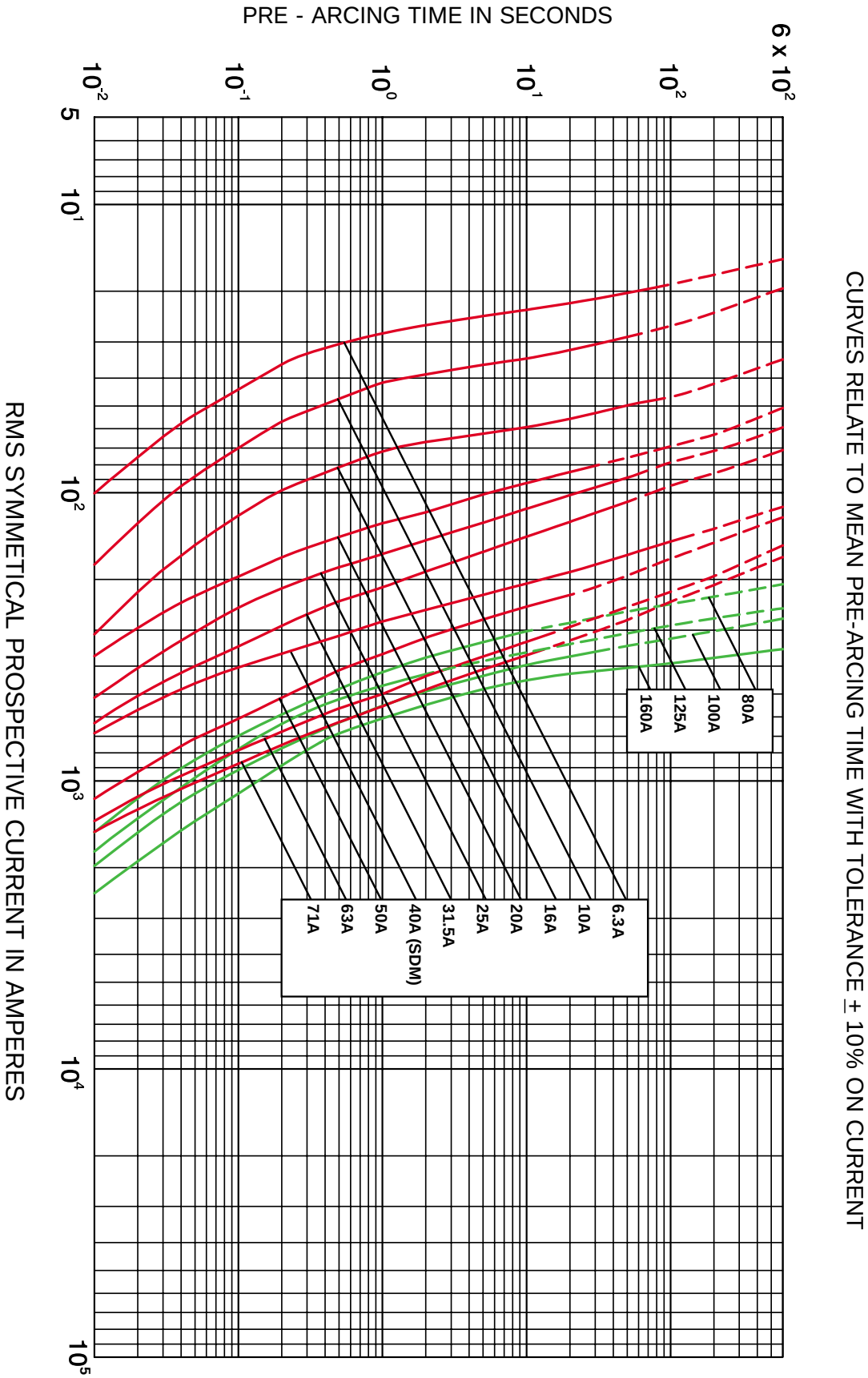

Time current characteristics for 36kV DIN Fuse Links, 'S' range, fuse types SDQ, SFQ and SXQ

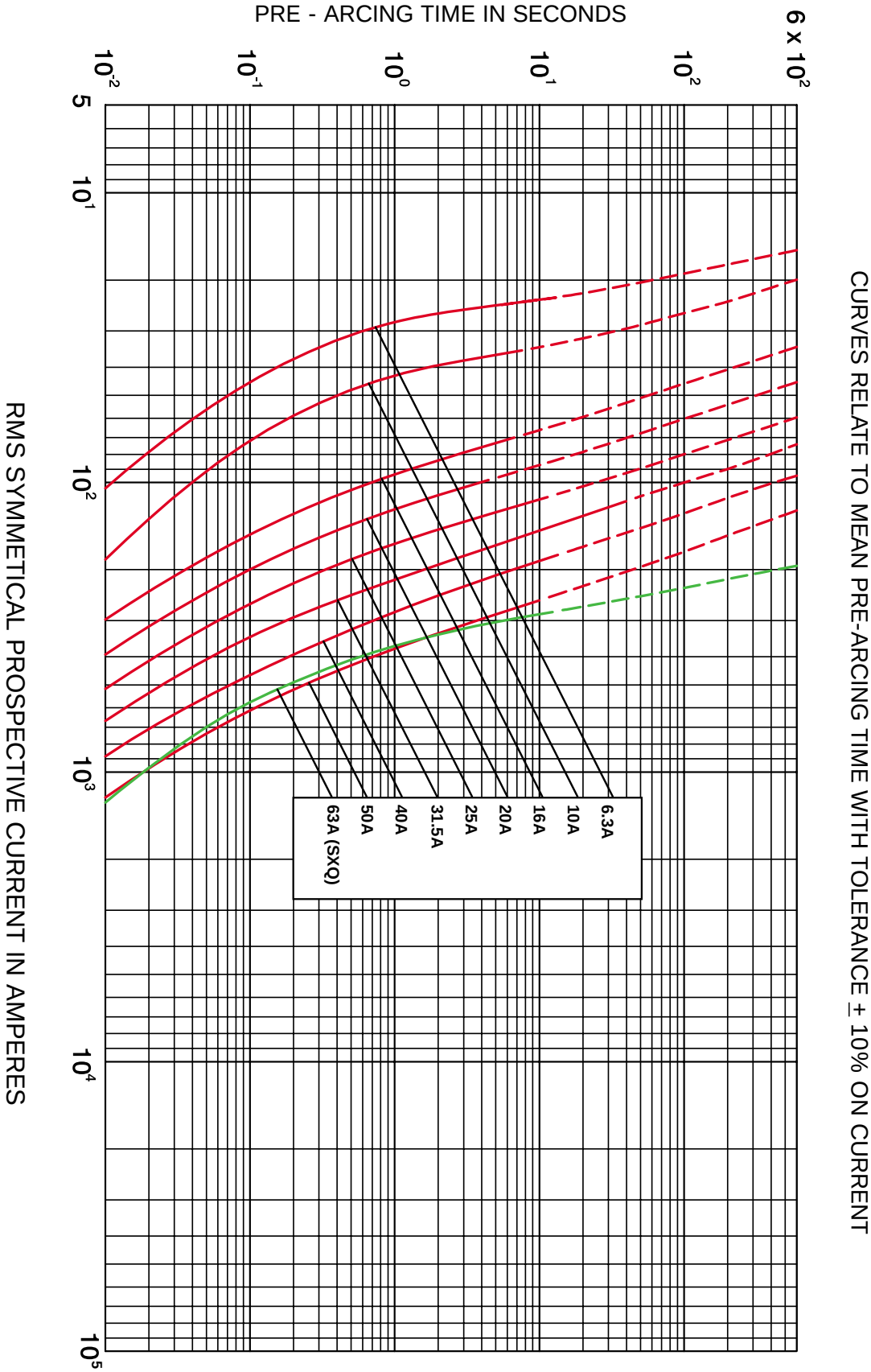

Time current characteristics for 12kV DIN Fuse Links, 'F' range, fuse types FDL, FFL and FXL

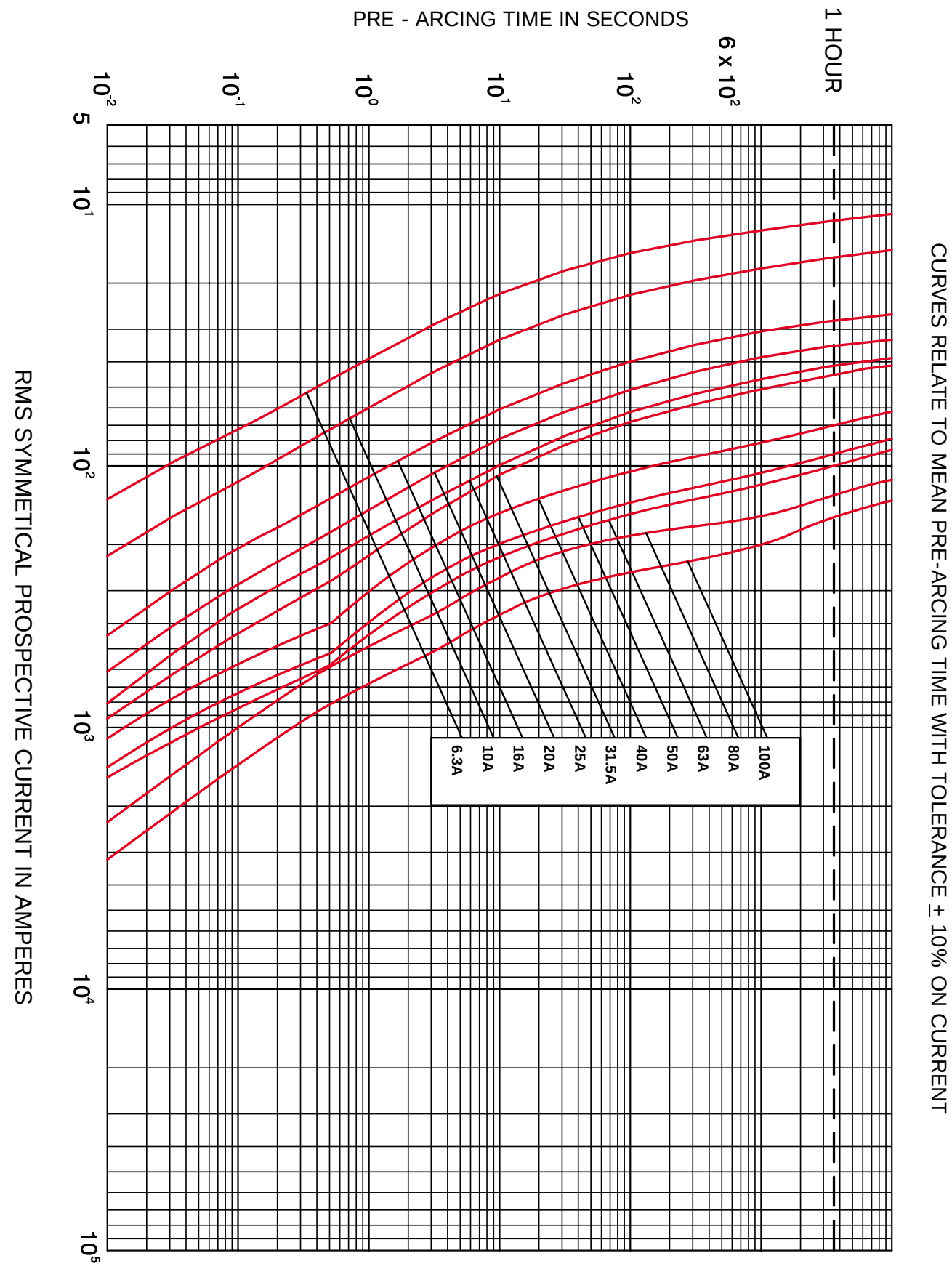

Time current characteristics for 24kV DIN Fuse Links, 'F' range, fuse types FDM and FFM

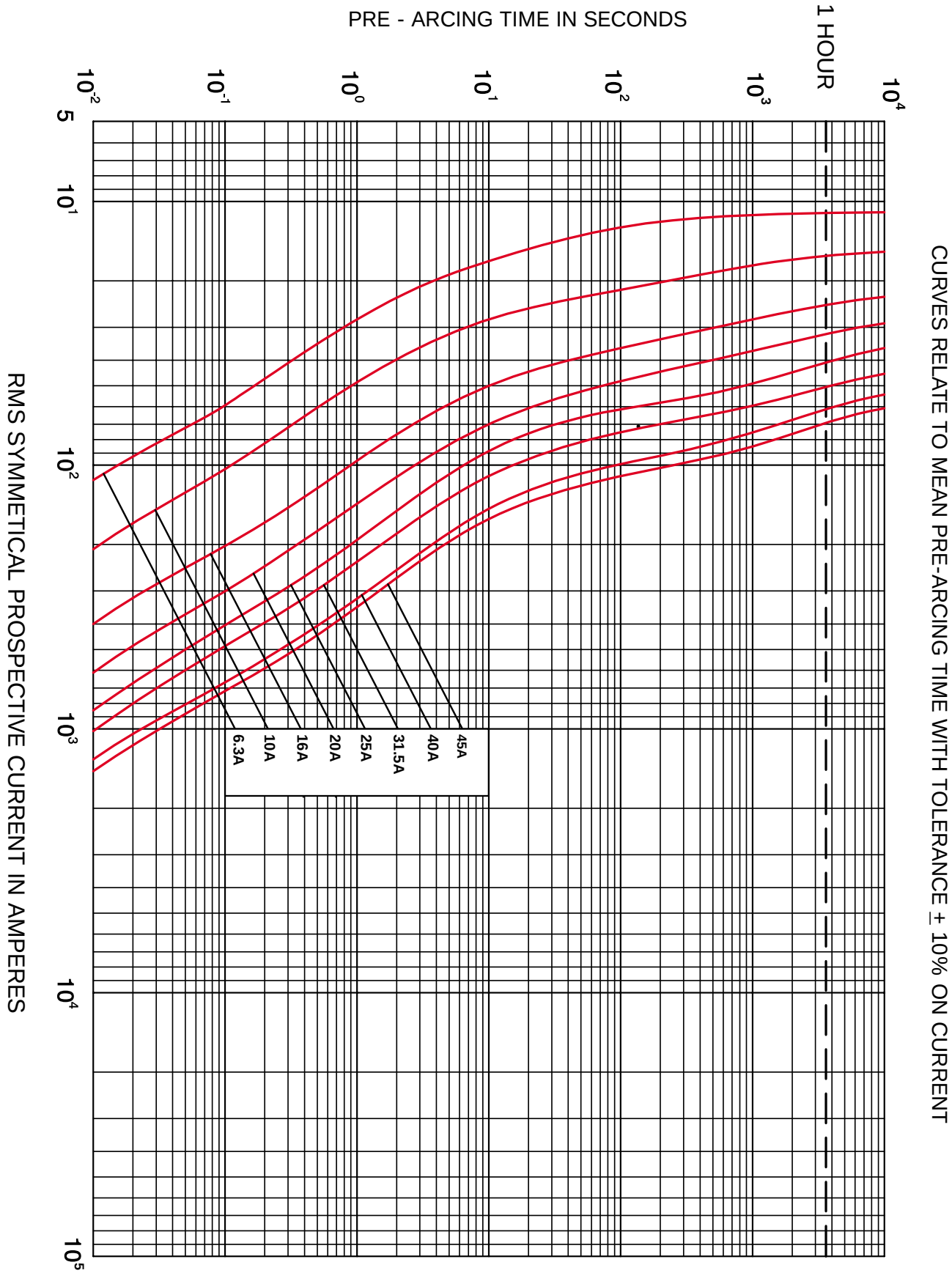

Striker characteristics

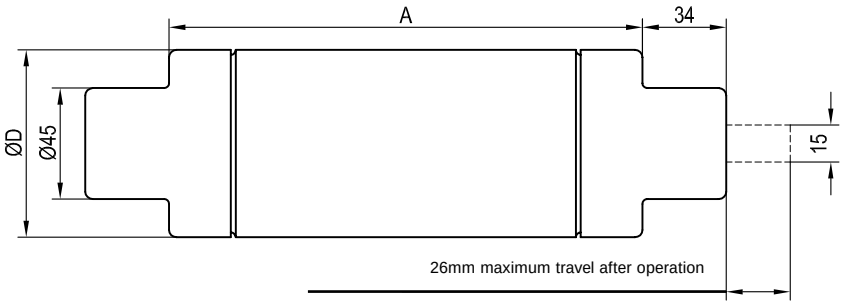

PRODUCT CODE	A	D
ADOSJ	192	51
SDOSJ	192	51
ADLSJ	292	51
FDLSJ	292	51
SDLSJ	292	51
FDMSJ	442	51
SDMSJ	442	51
SDQSJ	537	51
SFOSJ	192	76
AILSJ	292	76
FFLSJ	292	76
SFLSJ	292	76
SKLSJ	292	76
AIMSJ	442	76
FFMSJ	442	76
SFMSJ	442	76
SKMSJ	442	76
SFQSJ	537	76
SXLSJ	292	88
SXMSJ	442	88
SXQSJ	537	88
FXLSJ	292	88

- Please refer to the 'how to order' page 61 of this catalogue for further details of how ordering codes are formatted

E = Spring Striker 80N to IEC 60282-1 designation 'medium'

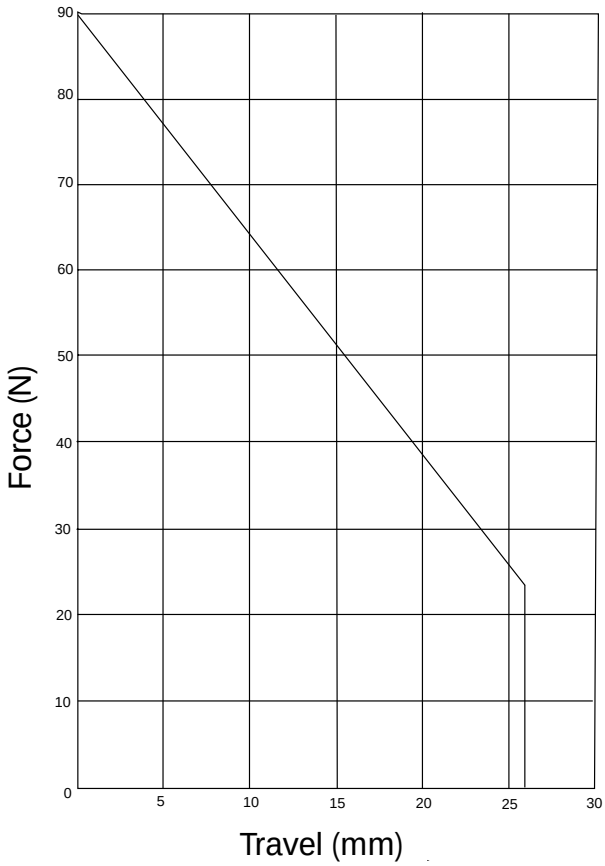

S = Spring Striker 50N to DIN 43625 and IEC 60282-1 designation 'medium'

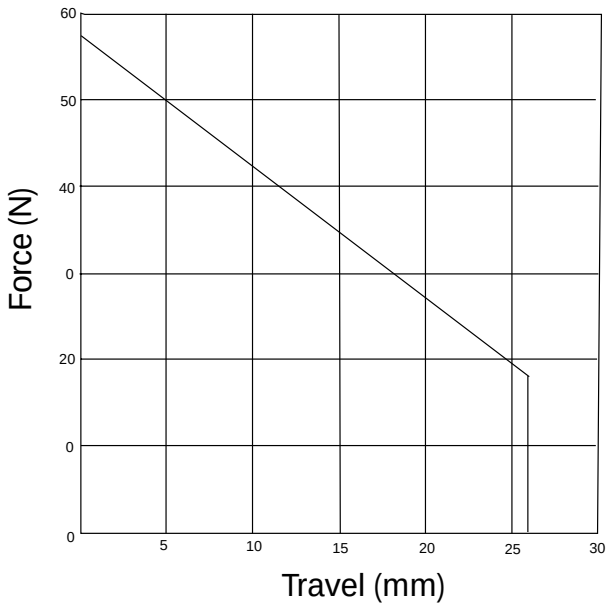

General guide to the selection of DIN Fuse Links for use in the primary circuit of three phase transformers

For HV DIN Fuse Links type SXLSJ, SDLSJ, SFLSJ, SKLSJ, SDMSJ, SFMSJ, SXMSJ SDQSJ, SFQSJ. Selection guide using LV Fuse Links operating class gG/gL on low voltage side for individual cable exit protection.

Selection Table for Back-up Fuse Links

Tranformer Rating	Transformer Primary Voltage					
	10 (kV)		20 (kV)		30 (kV)	
	Rated Current of the High Voltage Fuse Link		Rated Current of the High Voltage Fuse Link		Rated Current of the High Voltage Fuse Link	
(kVA)	Min	Max	Min	Max	Min	Max
50	6.3	10	6.3	6.3	3.15	3.15
100	16	16	6.3	16	6.3	10
125	16	25	10	16	6.3	10
160	16	31.5	10	16	6.3	10
200	20	31.5	16	20	10	16
250	25	50	16	25	10	16
315	31.5	63	20	31.5	16	16
400	40	80	20	40	16	25
500	50	80	25	50	16	31.5
630	63	100	31.5	50	20	40
800	80	125	40	50	25	40
1000	100	125	50	71	31.5	50
1250	125	200	63	100	40	50
1600	160	200	71	100	50	63
2000	200	200	100	160	63	63

For HV DIN Fuse Links type SXLSJ, SDLSJ, SFLSJ, SKLSJ, SDMSJ, SFMSJ, SXMSJ SDQSJ, SFQSJ. Selection guide using LV Fuse Links operating class gG/gL on the low voltage side for overload protection of the transformer.

Selection Table for Back-up Fuse Links

Tranformer Rating	Transformer Primary Voltage						Low Voltage
	10 (kV)		20 (kV)		30 (kV)		NH Fuse Size
	Rated Current of the High Voltage Fuse Link		Rated Current of the High Voltage Fuse Link		Rated Current of the High Voltage Fuse Link		gG/gL
(kVA)	Min	Max	Min	Max	Min	Max	(A)
50	10	10	6.3	6.3	3.15	3.15	80
100	16	16	10	16	6.3	10	125
125	20	25	10	16	6.3	10	160
160	25	31.5	16	16	10	10	200
200	31.5	31.5	16	20	16	16	250
250	40	50	20	25	16	16	315
315	50	63	25	31.5	16	20	400
400	63	80	31.5	40	20	25	500
500	80	80	40	50	25	31.5	630
630	100	100	50	50	31.5	40	800
800	125	125	50	50	40	40	1000
1000	125	125	63	71	50	50	1250

Selection of these HV fuse links has been based on the following:

1. The fuse link should withstand transformer magnetising inrush currents, taken as 12 times full load current for 0.1 seconds.
2. The fuse link should discriminate with the rating of secondary fuse link stated or where only individual cable exit protection exists, the highest rating likely to be used.
3. The fuse link should operate within 2 seconds for transformers complying with IEC60076 - 5 in respect of impedance, voltage and short circuit withstand current.
4. The fuse link should operate reasonably quickly in the event of a transformer internal fault, or an earth fault in the secondary terminal zone of the transformer.
5. In the case where there is no secondary fuse link for overload protection, the minimum recommended HV fuse link rating applies to the use of fuse links in encapsulated enclosures where permissible continuous overload is generally limited to 20% of transformer full load current. However if greater overload currents are permissible a higher rating of fuse link may be required. Where the fuse link is used in open air or conditions of unrestricted ventilation a higher permissible overload may be possible.
6. In most cases more than one rating of HV fuse link is recommended for a particular transformer size. Choice of fuse link will then depend on which fuse offers the best protection e.g. having one fuse for several transformer sizes.

Recommendations for other voltages are available on request.

General guide to the selection of DIN Fuse Links for use in the primary circuit of three phase transformers

For HV DIN fuse links type SXLSJ, SDLSJ, SFLSJ, SKLSJ, SDMSJ, SFMSJ, SXMSJ SDQSJ, SFQSJ. Selection guide according to DIN VDE 0670 part 402 using LV fuse links operating class gTr on low voltage side for overload protection of the transformer.

Selection Table for Back-up Fuse Links

Tranformer Rating	Transformer Primary Voltage						Low Voltage
	10 (kV)		20 (kV)		30 (kV)		NH Fuse Size
	Rated Current of the High Voltage Fuse Link		Rated Current of the High Voltage Fuse Link		Rated Current of the High Voltage Fuse Link		gTr
(kVA)	Min	Max	Min	Max	Min	Max	(A)
100	16	16	10	10	6.3	6.3	100
125	16	16	10	10	10	10	125
160	20	25	16	16	10	10	160
200	25	31.5	16	16	16	16	200
250	31.5	40	16	25	16	20	250
315	40	50	25	25	20	25	315
400	50	63	25	31.5	25	25	400
500	63	80	31.5	40	25	31.5	500
630	80	100	40	50	31.5	40	630
800	100	125	63	63	40	50	800
1000	125	160	63	80	40	50	1000

For HV DIN fuse links type FDLSJ, FFLSJ, FXLSJ, FDMSJ, FFMSJ. Selection guide using LV fuse links operating class gG/gL on low voltage side for individual cable exit protection.

Selection Table for Full Range Fuse Links

Tranformer Rating	Transformer Primary Voltage			
	10 (kV)		20 (kV)	
	Rated Current of the High Voltage Fuse Link		Rated Current of the High Voltage Fuse Link	
(kVA)	Min	Max	Min	Max
50	6.3	10	6.3	6.3
100	10	20	6.3	10
125	16	25	6.3	16
160	16	31.5	10	16
200	20	40	10	20
250	25	50	16	25
315	31.5	63	16	31.5
400	40	80	20	40
500	50	100	25	45
630	63	100	31.5	45
800	80	100	40	45
1000	100	100	45	45

Selection of these HV fuse links has been based on the following:

1. The fuse link should withstand transformer magnetising inrush currents, taken as 12 times full load current for 0.1 seconds.
2. The fuse link should discriminate with the rating of secondary fuse link stated or where only individual cable exit protection exists, the highest rating likely to be used.
3. The fuse link should operate within 2 seconds for transformers complying with IEC60076 - 5 in respect of impedance, voltage and short circuit withstand current.
4. The fuse link should operate reasonably quickly in the event of a transformer internal fault, or an earth fault in the secondary terminal zone of the transformer.
5. In the case where there is no secondary fuse link for overload protection, the minimum recommended HV fuse link rating applies to the use of fuse links in encapsulated enclosures where permissible continuous overload is generally limited to 20% of transformer full load current. However if greater overload currents are permissible a higher rating of fuse link may be required. Where the fuse link is used in open air or conditions of unrestricted ventilation a higher permissible overload may be possible.
6. In most cases more than one rating of HV fuse link is recommended for a particular transformer size. Choice of fuse link will then depend on which fuse offers the best protection e.g. having one fuse for several transformer sizes.

Recommendations for other voltages are available on request.

General guide to the selection of DIN Fuse Links for use in the primary circuit of three phase transformers

For HV DIN fuse links type FDLSJ, FFLSJ, FXLSJ, FDMSJ, FFMSJ. Selection guide using LV fuse links operating class gG/gL on low voltage side for overload protection of the transformer.

Selection Table for Full Range Fuse Links

Tranformer Rating	Transformer Primary Voltage				Low Voltage
	10 (kV)		20 (kV)		NH Fuse Size
	Rated Current of the High Voltage Fuse Link		Rated Current of the High Voltage Fuse Link		gG/gL
(kVA)	Min	Max	Min	Max	(A)
50	6.3	6.3	6.3	6.3	80
100	10	10	10	10	125
125	16	16	10	10	160
160	16	20	16	16	200
200	20	31.5	16	16	250
250	31.5	40	16	20	315
315	40	40	20	20	400
400	40	63	25	31.5	500
500	50	63	31.5	40	630
630	100	100	40	45	800
800	100	100	-	-	1000

For fuse links type FDLSJ, FFLSJ, FXLSJ, FDMSJ, FFMSJ. Selection guide according to DIN VDE O670 part 402 using LV fuse links operating class gTr on low voltage side for overload protection of the transformer.

Selection Table for Full Range Fuse Links

Tranformer Rating	Transformer Primary Voltage				Low Voltage
	10 (kV)		20 (kV)		NH Fuse Size
	Rated Current of the High Voltage Fuse Link		Rated Current of the High Voltage Fuse Link		gTr
(kVA)	Min	Max	Min	Max	(kVA)
100	10	20	6.3	10	100
125	16	25	10	16	125
160	16	31.5	10	16	160
200	20	40	16	20	200
250	25	50	20	25	250
315	40	63	20	31.5	315
400	40	80	25	40	400
500	50	100	31.5	45	500
630	80	100	40	45	630
800	100	100	45	45	800
1000	100	100	-	-	1000

Selection of these HV fuse links has been based on the following:

1. The fuse link should withstand transformer magnetising inrush currents, taken as 12 times full load current for 0.1 seconds.
2. The fuse link should discriminate with the rating of secondary fuse link stated or where only individual cable exit protection exists, the highest rating likely to be used.
3. The fuse link should operate within 2 seconds for transformers complying with IEC60076 - 5 in respect of impedance, voltage and short circuit withstand current.
4. The fuse link should operate reasonably quickly in the event of a transformer internal fault, or an earth fault in the secondary terminal zone of the transformer.
5. In the case where there is no secondary fuse link for overload protection, the minimum recommended HV fuse link rating applies to the use of fuse links in encapsulated enclosures where permissible continuous overload is generally limited to 20% of transformer full load current. However if greater overload currents are permissible a higher rating of fuse link may be required. Where the fuse link is used in open air or conditions of unrestricted ventilation a higher permissible overload may be possible.
6. In most cases more than one rating of HV fuse link is recommended for a particular transformer size. Choice of fuse link will then depend on which fuse offers the best protection e.g. having one fuse for several transformer sizes.

Recommendations for other voltages are available on request.

British Standard Motor Fuse Links

North American Motor Fuse Links

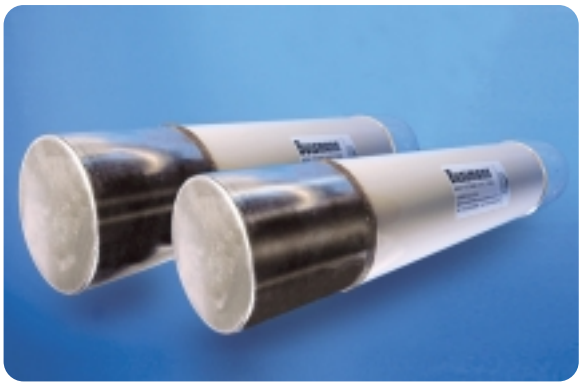

DIN Dimensioned Motor Fuse Links

- **Motor fuse links comply with IEC60282-1, IEC644 and BS5907.**
- **Available in DIN 43625 and BS2692 dimensions.**
- **Sold in a wide range of ratings from:**
  3.6 kV – 5 to 450 A
  7.2 kV – 5 to 355 A
- **North American dimensioned products also available. 2R to 24R ratings.**

Bussmann Motor Fuse Links

The Bussmann range of motor fuse links are designed to meet the specific requirements necessary for motor protection. During the starting cycle of direct on-line motors, the fuse elements will reach a considerably higher temperature than during normal operation; (this is due to the the high amount of current the motor will draw as it starts, typically, 6 times its normal load current value). This results in expansion and contraction of the fuse elements and could cause premature operation of the fuse.

Bussmann motor fuse links encompass an advanced design to minimise this effect. This therefore, negates the need to over specify the fuse rating due to high values of of motor starting current.

Bussmann motor fuse links operate extremely quickly under heavy fault currents, resulting from the time / current characteristic. Low power dissipation ensures low temperature rise, important in multi-tier starters for example. Switching (Arc), voltages are lower than permitted values, therefore, 5.5kV fuses are also suitable for 4.8kV and 2.4kV circuits.

Application

Fuse Links provide short circuit protection in motor circuits to both the motor starter and cables from the starter to the motor. Overload protection is provided by the motor starter, generally by an overload relay and contactor. Combination striker tripping may also form part of associated equipment which houses the fuse links and motor starters.

Application Procedure

For any motor the fuse current rating is determined by magnitude and duration of starting current, except in a few situations where the starting currents are very light. The fuse current rating should therefore be selected as follows:

Direct-on-line Starting

In the absence of specific information the starting current can usually be taken to be six times the motor's full load current. The starting time will depend on the type of the drive but will be approximately as follows:

Pump Motors - 6 seconds

Mill Motors - 10 to 15 seconds

Fan Motors - 60 seconds

These are average values and the appropriate figures for starting current and starting time for actual installation should be obtained wherever possible.

Multiply the starting current by 1.7 and using this value of current and the starting time, (it is recommended that a minimum time of 5 seconds be adopted), plot this point on the time-current characteristics of the fuse link. The correct current rating of the fuse is then chosen as being the one immediately to the right of the point so plotted. The chosen fuse must also have a current rating of at least 1.3 times the full-load current of the associated motor.

The rating chosen will be adequate for normal applications where the associated motor is not started more than twice in given period of one hour.

For applications using more frequent starting duties, a greater derating factor must be applied as shown in the following table.

Maximum 2 starts per hour - Derating factor 1.7	**Maximum** 8 starts per hour - Derating factor 2.1
Maximum 4 starts per hour - Derating factor 1.9	**Maximum** 16 starts per hour - Derating factor 2.4

Assisted Starting

A similar method of fuse selection may be used as for direct-on-line starting (see above), but it must be noted that the normal running current of the motor is likely to be closer in value to the nominal current rating of the fuse than for direct-on-line applications.

The rating of fuse chosen will need to be appreciably greater than the motor running current to allow for restricted cooling inside control gear cubicles, particularly where multi-tier starters are involved. In case of doubt refer to Bussmann for further guidance.

Note

For applications involving more frequent starting duties than 16 times per hour or where unusual duty cycles are involved, consult Bussmann application engineers for advice.

Selection Tables

Table of ratings for motor fuses 3.6 - 7.2kV to British Standard dimensions

Part Number	Voltage Rating	Current Rating	Breaking Capacity	Minimum Breaking Current	Cold resistance and watts loss in free air at rated current		Joule Intergral (I^2t)		Length	Diameter Ø	Weight
	U_n	I_n	I_1	I_3			A^2s				
	kV	A	kA	A	m Ω	W	Minimum Pre-Arcing	Maximum Total Clearing	mm	mm	kg
3.6WJON65	3.6	5	50	13	148	5	$2.0X10^1$	$1.6X10^3$	192	35	0.54
3.6WJON66.3	3.6	6.3	50	24	56.3	8	$1.6X10^2$	$1.3X10^3$	192	35	0.54
3.6WJON610	3.6	10	50	24	56.3	8	$1.6X10^2$	$1.3X10^3$	192	35	0.54
3.6WJON616	3.6	16	50	56	33.1	12	$1.7X10^2$	$1.4X10^3$	192	35	0.54
3.6WJON620	3.6	20	50	56	22.1	12	$3.9X10^2$	$3.2X10^3$	192	35	0.54
3.6WJON625	3.6	25	50	70	17.7	15	$6.1X10^2$	$4.9X10^3$	192	35	0.54
3.6WJON631.5	3.6	31.5	50	112	10.1	14	$1.2X10^3$	$9.8X10^3$	192	35	0.54
3.6WJON640	3.6	40	50	112	7.54	17	$2.1X10^3$	$1.7X10^4$	192	35	0.54
3.6WJON650	3.6	50	50	140	6.03	21	$3.2X10^3$	$2.6X10^4$	192	35	0.54
3.6WDOH650	3.6	50	50	180	5.36	20	$1.8X10^3$	$2.4X10^4$	192	51	1.1
3.6WDOH663	3.6	63	50	225	3.68	21	$3.8X10^3$	$4.5X10^4$	192	51	1.1
3.6WDOH680	3.6	80	50	288	2.88	27	$6.3X10^3$	$8.0X10^4$	192	51	1.1
3.6WDOH6100	3.6	100	50	360	2.16	31	$9.8X10^3$	$1.1X10^5$	192	51	1.1
3.6WDOH6125	3.6	125	50	450	1.73	39	$1.5X10^4$	$2.2X10^5$	192	51	1.1
3.6WFOH6160	3.6	160	50	600	1.28	47	$3.1X10^4$	$6.2X10^5$	192	76	2.1
3.6WFOH6200	3.6	200	50	600	0.938	52	$5.7X10^4$	$1.1X10^6$	192	76	2.1
3.6WDFHO50	3.6	50	50	152	6.61	21	$1.8X10^3$	$2.4X10^4$	254	51	1.46
3.6WDFHO63	3.6	63	50	171	5.03	28	$3.1X10^3$	$4.5X10^4$	254	51	1.46
3.6WDFHO80	3.6	80	50	190	3.52	31	$6.3X10^3$	$8.0X10^4$	254	51	1.46
3.6WDFHO100	3.6	100	50	190	2.87	39	$9.5X10^3$	$1.2X10^5$	254	51	1.46
3.6WDFHO125	3.6	125	50	190	2.44	53	$1.3X10^4$	$1.8X10^5$	254	51	1.46
3.6WFFHO160	3.6	160	50	300	1.53	54	$3.4X10^4$	$4.1X10^5$	254	76	3.2
3.6WFFHO200	3.6	200	50	300	1.24	67	$5.1X10^4$	$7.2X10^5$	254	76	3.2
3.6WKFHO250	3.6	250	50	520	0.653	57	$1.8X10^5$	$2.4X10^6$	254	76	3.2
3.6WKFHO315	3.6	315	50	650	0.435	60	$4.1X10^5$	$5.0X10^6$	254	76	3.2
3.6WKFHO355	3.6	355	50	820	0.345	59	$6.4X10^5$	$7.0X10^6$	254	76	3.2
3.6WKFHO400	3.6	400	50	820	0.345	76	$6.4X10^5$	$7.0X10^6$	254	76	3.2
3.6WFGHO31.5	3.6	31.5	50	151	18.4	25	$4.5X10^2$	$6.0X10^3$	359	76	4.1
3.6WFGHO40	3.6	40	50	151	13.9	31	$8.0X10^2$	$1.2X10^4$	359	76	4.1
3.6WFGHO50	3.6	50	50	151	9.24	32	$1.8X10^3$	$2.2X10^4$	359	76	4.1
3.6WFGHO63	3.6	63	50	151	6.93	38	$3.2X10^3$	$4.5X10^4$	359	76	4.1
3.6WFGHO80	3.6	80	50	170	5.47	48	$5.1X10^3$	$7.5X10^4$	359	76	4.1
3.6WFGHO100	3.6	100	50	212	4.40	62	$7.9X10^3$	$1.2X10^5$	359	76	4.1
3.6WFGHO125	3.6	125	50	212	3.60	79	$1.2X10^4$	$1.7X10^5$	359	76	4.1
3.6WFGHO160	3.6	160	50	300	2.16	75	$3.4X10^4$	$4.2X10^5$	359	76	4.1
3.6WFGHO200	3.6	200	50	300	1.77	95	$5.1X10^4$	$7.0X10^5$	359	76	4.1
3.6WFGHO250	3.6	250	50	500	1.13	96	$1.3X10^5$	$1.9X10^6$	359	76	4.1
3.6WKGHO315	3.6	315	50	852	0.646	89	$4.5X10^5$	$6.0X10^6$	359	76	3.9
3.6WKGHO355	3.6	355	50	852	0.512	90	$6.4X10^5$	$8.5X10^6$	359	76	3.9
3.6WKGHO400	3.6	400	50	960	0.454	100	$8.2X10^5$	$1.1X10^7$	359	76	3.9
3.6WKGHO450	3.6	450	50	1150	0.379	108	$1.2X10^6$	$1.5X10^7$	359	76	3.9
7.2WFNHO25	7.2	25	40	84	38.7	34	$1.4X10^2$	$2.1X10^3$	403	76	4.4
7.2WFNHO31.5	7.2	31.5	40	96	25.5	35	$3.1X10^2$	$4.7X10^3$	403	76	4.4
7.2WFNHO40	7.2	40	40	107	18.2	40	$6.1X10^2$	$8.0X10^3$	403	76	4.4
7.2WFNHO50	7.2	50	40	122	13.3	46	$1.2X10^3$	$1.5X10^4$	403	76	4.4
7.2WFNHO63	7.2	63	40	133	10.4	56	$1.9X10^3$	$3.0X10^4$	403	76	4.4
7.2WFNHO80	7.2	80	40	133	7.30	65	$3.8X10^3$	$5.8X10^4$	403	76	4.4
7.2WFNHO100	7.2	100	40	262	4.92	69	$9.8X10^3$	$1.3X10^5$	403	76	4.4
7.2WFNHO125	7.2	125	40	300	2.94	63	$2.4X10^4$	$2.4X10^5$	403	76	4.4
7.2WFNHO160	7.2	160	40	337	2.05	72	$5.0X10^4$	$7.0X10^5$	403	76	4.4
7.2WKNHO200	7.2	200	40	500	1.63	90	$8.8X10^4$	$1.3X10^6$	403	76	4.4
7.2WKNHO224	7.2	224	40	500	1.44	98	$1.1X10^5$	$1.6X10^6$	403	76	4.4
7.2WKNHO250	7.2	250	40	960	1.11	105	$2.2X10^5$	$1.6X10^6$	403	76	4.4
7.2WKNHO315	7.2	315	40	960	0.779	107	$4.5X10^5$	$3.1X10^6$	403	76	4.4

- WDOH6 fuse links also available in the range 6.3 to 40A as code ADOH6.

Table of ratings for motor fuses 3.6 - 7.2kV to DIN dimensions

Part Number	Voltage Rating	Current Rating	Breaking Capacity	Minimum Breaking Current	Cold resistance and watts loss in free air at rated current		Joule Intergral (I^2t)		Length	Diameter Ø	Weight
	U_n	I_n	I_1	I_3			A^2s				
	kV	A	kA	A	m Ω	W	Minimum Pre-Arcing	Maximum Total Clearing	mm	mm	kg
3.6WDOSJ50	3.6	50	50	180	5.36	20	$1.8X10^3$	$2.4X10^4$	192	51	1.1
3.6WDOSJ63	3.6	63	50	225	3.68	21	$3.8X10^3$	$4.5X10^4$	192	51	1.1
3.6WDOSJ80	3.6	80	50	288	2.88	27	$6.3X10^3$	$8.0X10^4$	192	51	1.1
3.6WDOSJ100	3.6	100	50	360	2.16	31	$9.8X10^3$	$1.1X10^5$	192	51	1.1
3.6WDOSJ125	3.6	125	50	450	1.73	39	$1.5X10^4$	$2.2X10^5$	192	51	1.1
3.6WFOSJ160	3.6	160	50	600	1.28	47	$3.1X10^4$	$6.2X10^5$	192	76	2.1
3.6WFOSJ200	3.6	200	50	600	0.938	52	$5.7X10^4$	$1.1X10^6$	192	76	2.1
3.6WDLSJ50	3.6	50	50	152	7.73	27	$1.8X10^3$	$2.4X10^4$	292	51	1.63
3.6WDLSJ63	3.6	63	50	171	5.9	32	$3.1X10^3$	$4.5X10^4$	292	51	1.63
3.6WDLSJ80	3.6	80	50	190	4.12	37	$6.3X10^3$	$8.0X10^4$	292	51	1.63
3.6WDLSJ100	3.6	100	50	190	3.38	46	$9.5X10^3$	$1.2X10^5$	292	51	1.63
3.6WDLSJ125	3.6	125	50	190	2.85	61	$1.3X10^4$	$1.8X10^5$	292	51	1.63
3.6WFLSJ160	3.6	160	50	300	1.74	61	$3.4X10^4$	$4.1X10^5$	292	76	3.16
3.6WFLSJ200	3.6	200	50	300	1.42	80	$5.1X10^4$	$7.2X10^5$	292	76	3.16
3.6WKLSJ250	3.6	250	50	820	0.741	67	$1.9X10^5$	$2.4X10^6$	292	76	3.16
3.6WKLSJ315	3.6	315	50	820	0.507	69	$4.0X10^5$	$5.0X10^6$	292	76	3.16
3.6WKLSJ400	3.6	400	50	820	0.401	90	$6.4X10^5$	$7.0X10^6$	292	76	3.16
7.2WFMSJ25	7.2	25	63	84	33.9	33	$1.4X10^2$	$2.1X10^3$	442	76	5.2
7.2WFMSJ31.5	7.2	31.5	63	96	25.4	40	$3.1X10^2$	$4.7X10^3$	442	76	5.2
7.2WFMSJ40	7.2	40	63	107	17.8	56	$6.1X10^2$	$8.0X10^3$	442	76	5.2
7.2WFMSJ50	7.2	50	63	122	14.8	53	$1.2X10^3$	$1.5X10^4$	442	76	5.2
7.2WFMSJ63	7.2	63	63	133	11.6	61	$1.9X10^3$	$3.0X10^4$	442	76	5.2
7.2WFMSJ80	7.2	80	63	133	8.12	72	$3.8X10^3$	$5.8X10^4$	442	76	5.2
7.2WFMSJ100	7.2	100	63	262	5.33	74	$9.8X10^3$	$1.3X10^5$	442	76	5.2
7.2WFMSJ125	7.2	125	63	300	3.19	70	$2.4X10^4$	$2.4X10^5$	442	76	5.2
7.2WFMSJ160	7.2	160	63	337	2.23	79	$5.0X10^4$	$7.0X10^5$	442	76	5.2
7.2WKMSJ200	7.2	200	63	500	1.79	99	$8.8X10^4$	$1.3X10^6$	442	76	5.2
7.2WKMSJ224	7.2	224	63	500	1.59	110	$1.1X10^5$	$1.6X10^6$	442	76	5.2
7.2WKMSJ250	7.2	250	63	960	1.23	107	$2.2X10^5$	$1.6X10^6$	442	76	5.2
7.2WKMSJ315	7.2	315	63	960	0.869	120	$4.5X10^5$	$3.1X10^6$	442	76	5.2
7.2WKMSJ355	7.2	355	63	1000	0.724	125	$6.4X10^5$	$3.9X10^6$	442	76	5.2

Higher Current Ratings

Higher ratings than those tabulated above can be obtained by using fuse links connected in parallel. Special fixing arrangements for connecting up to 3 fuse links in parallel, are available. Please contact Bussmann application engineers for more details. The code designations for these arrangements are given in 'How to Order' (page 61), dimensional drawings are given on page 26.

Table of ratings for motor fuses 2.75 - 5.5kV to USA dimensions

Part Number	Voltage Rating	Current Rating	Breaking Capacity	Minimum Breaking Current	Cold resistance and watts loss in free air at rated current		Joule Intergral (I^2t)		Length	Diameter Ø	Weight
	U_n	I_n	I_1	I_3			A^2s				
	kV	A	kA	A	m Ω	W	Minimum Pre-Arcing	Maximum Total Clearing	mm	mm	kg
2.75VFRHA*R	2.75	2R	60	180	6.15	52	$8.1x10^3$	$2.8x10^4$	276	76	2.5
2.75VFRHA*R	2.75	3R	60	229	4.04	57	$1.9x10^4$	$7.5x10^4$	276	76	2.5
2.75VFRHA*R	2.75	4R	60	257	2.69	62	$4.2x10^4$	$1.4x10^5$	276	76	2.5
2.75VFRHA*R	2.75	6R	60	525	1.62	65	$3.9x10^4$	$3.4x10^5$	276	76	2.5
2.75VKRHA*R	2.75	9R	60	500	1.15	70	$8.8x10^4$	$8.4x10^5$	276	76	2.5
2.75VKRHA*R	2.75	12R	60	500	1.03	80	$1.1x10^5$	$1.2x10^6$	276	76	2.5
2.75VKRHK*R	2.75	18R	60	500	0.577	140	$3.5x10^5$	$3.2x10^6$	276	76	5.2
2.75VKRHK*R	2.75	24R	60	500	0.514	156	$4.5x10^5$	$5.5x10^6$	276	76	5.2
5.5VFNHA*R	5.5	2R	60	180	8.35	70	$8.1x10^3$	$2.8x10^4$	403	76	3.8
5.5VFNHA*R	5.5	3R	60	229	5.48	77	$1.9x10^4$	$7.9x10^4$	403	76	3.8
5.5VFNHA*R	5.5	4R	60	257	3.65	85	$4.2x10^4$	$1.6x10^5$	403	76	3.8
5.5VFNHA*R	5.5	6R	60	525	2.31	91	$3.9x10^4$	$3.6x10^5$	403	76	3.8
5.5VKNHA*R	5.5	9R	60	500	1.63	99	$8.8x10^4$	$8.8x10^5$	403	76	3.8
5.5VKNHA*R	5.5	12R	60	500	1.45	110	$1.1x10^5$	$1.3x10^6$	403	76	3.8
5.5VKNHK*R	5.5	18R	60	500	0.815	198	$3.5x10^5$	$3.4x10^6$	403	76	7.8
5.5VKNHK*R	5.5	24R	60	500	0.725	220	$4.5x10^5$	$5.8x10^6$	403	76	7.8

Time current characteristics for 3.6kV Motor Fuse Links, fuse types ADL, WDL, WFL and WKL

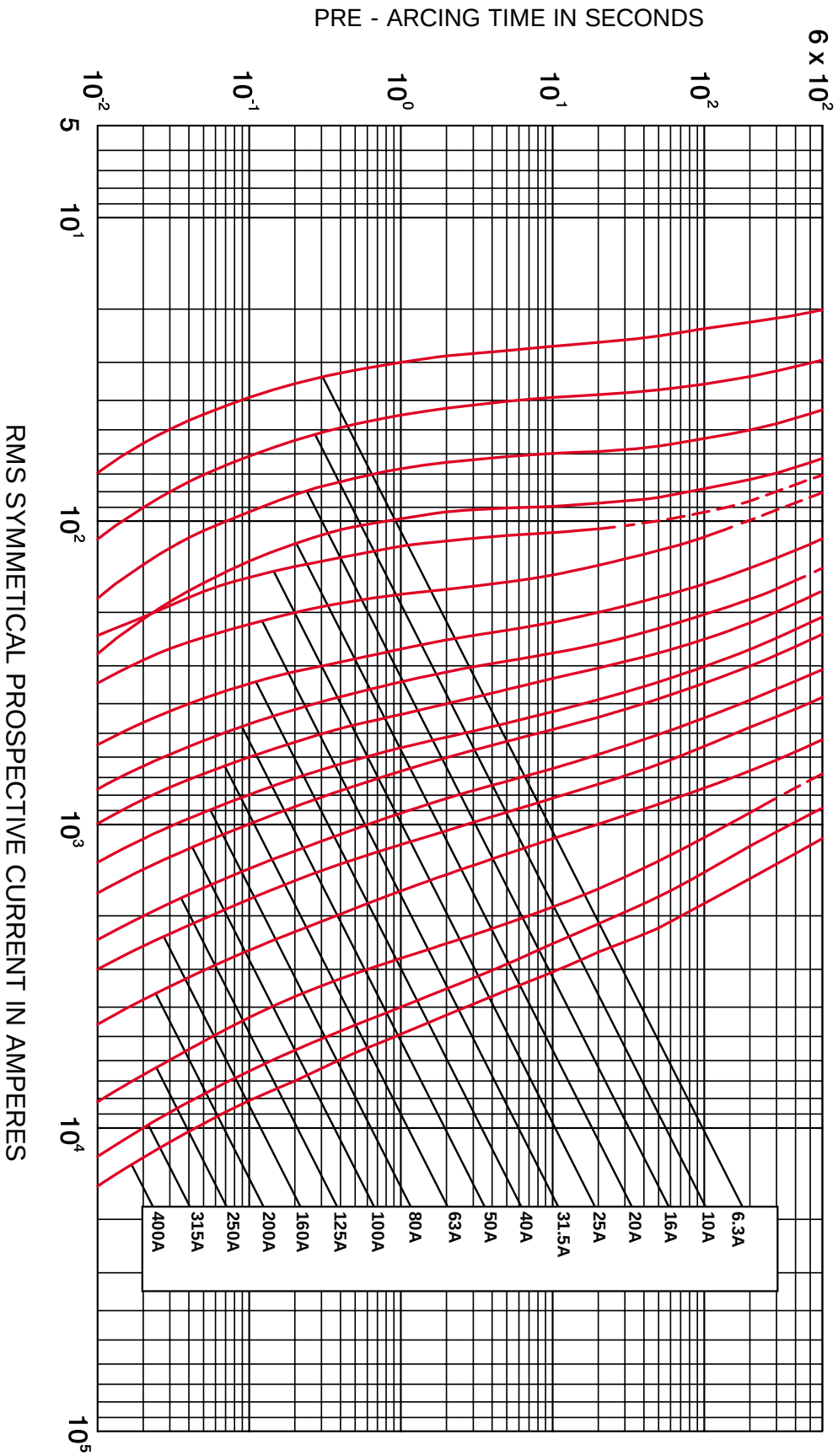

Time current characteristics for 3.6kV Motor Fuse Links, fuse types WDF, WFF and WKF

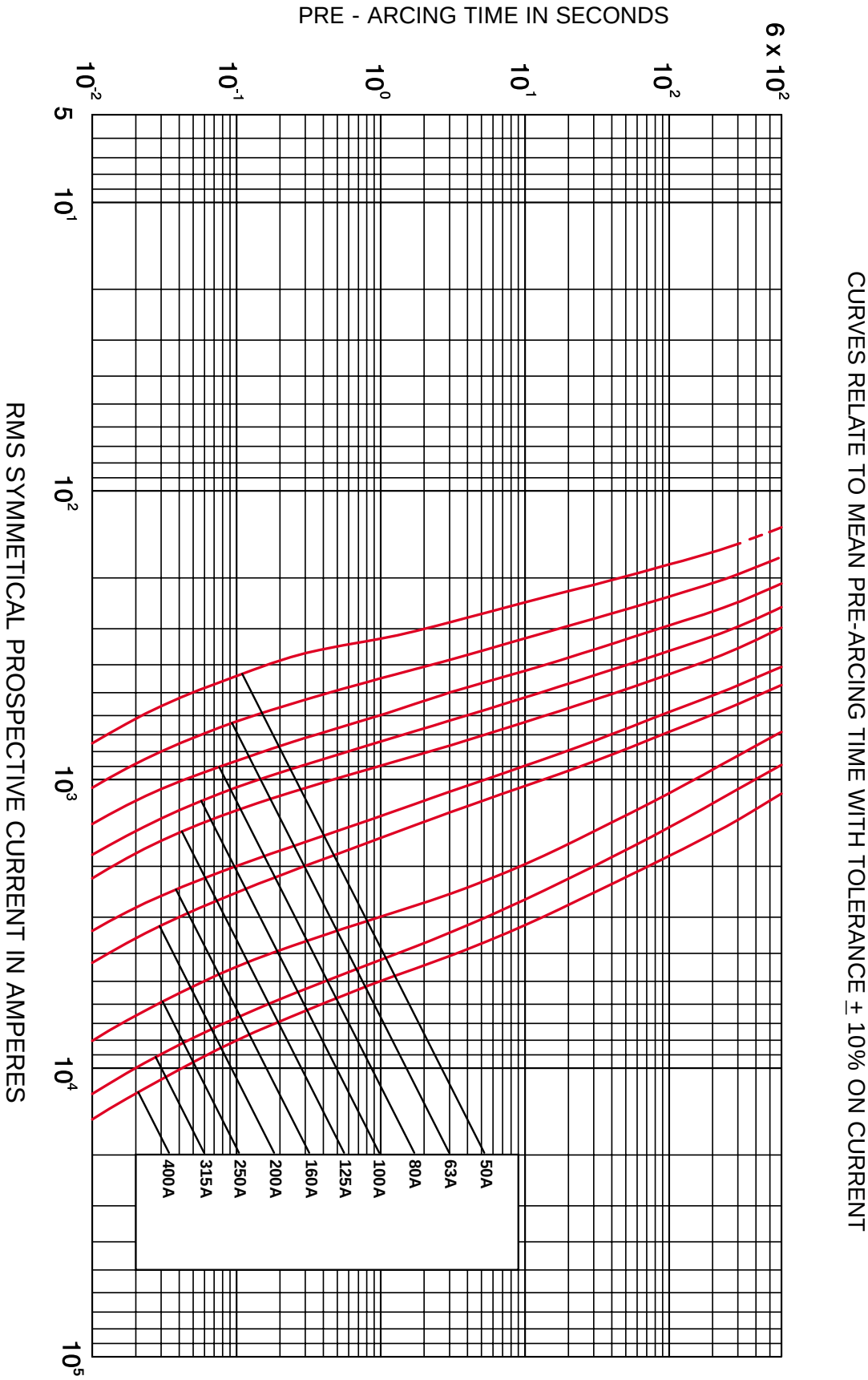

Time current characteristics for 3.6kV Motor Fuse Links, fuse types WFG and WKG

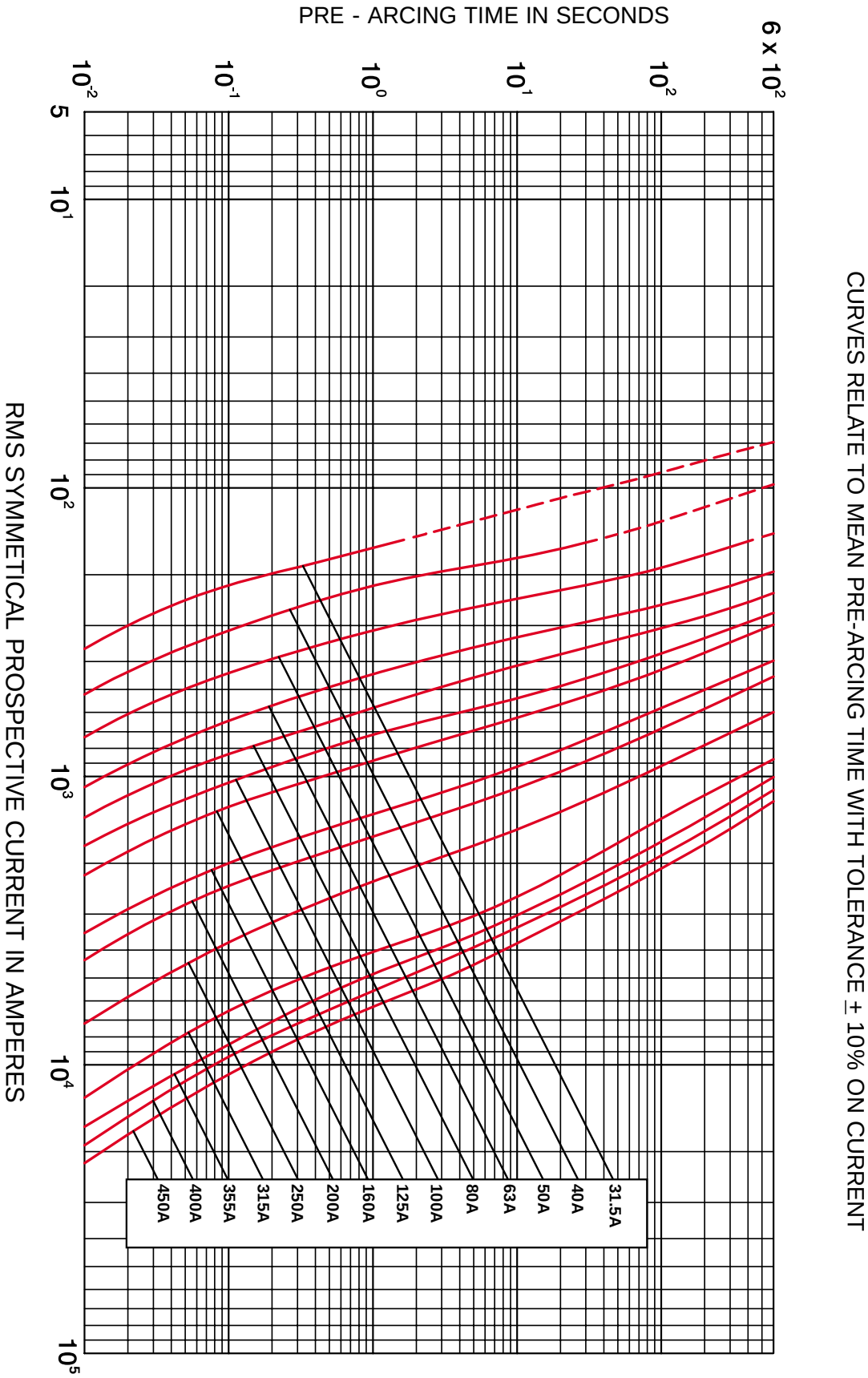

Time current characteristics for 7.2kV Motor Fuse Links, fuse types WFN, WKN, WFM and WKM (* only WKM)

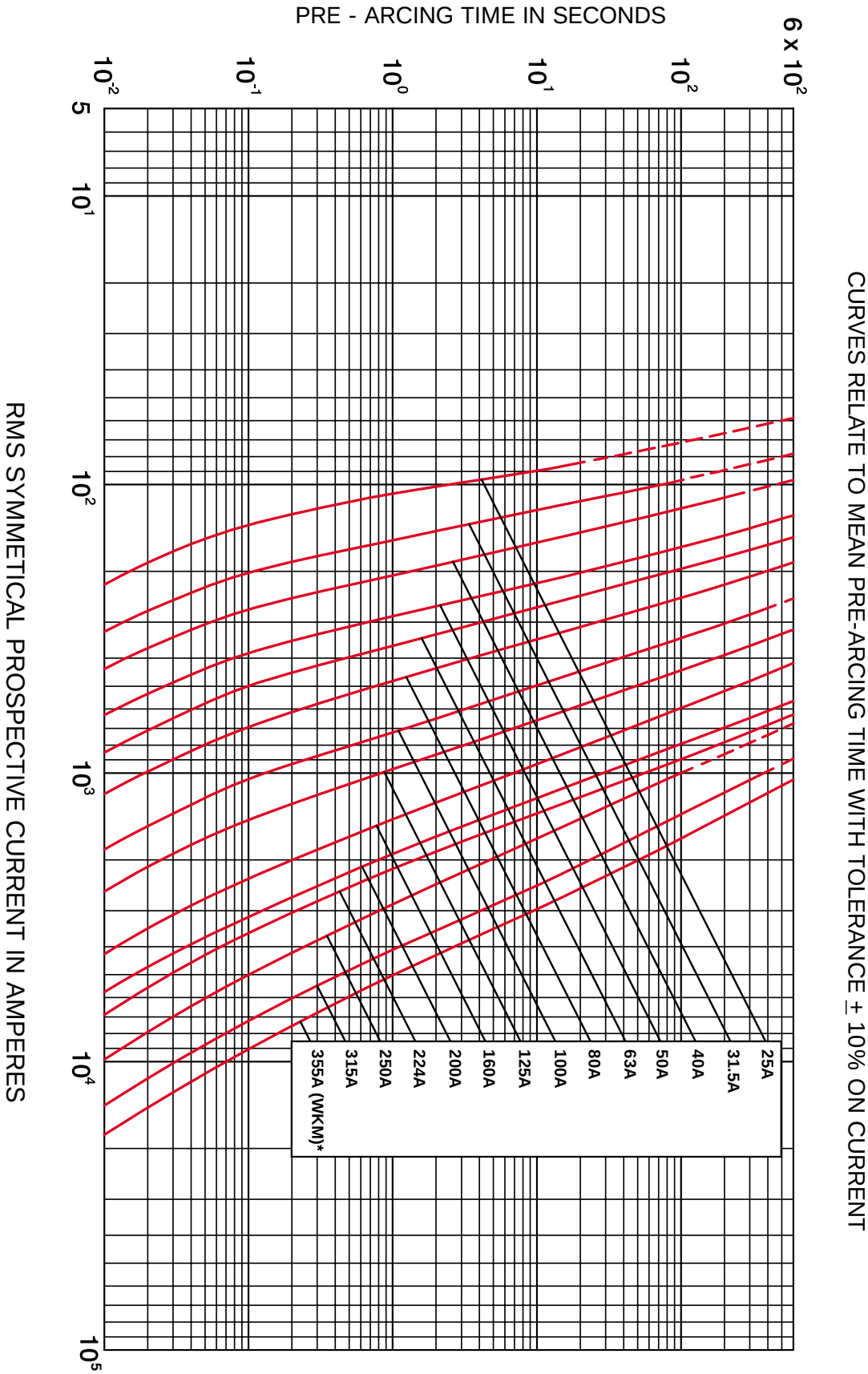

Dimensions (mm)

Fuse Link type: DIN

FUSE LINK TYPE	A	D
WDOSJ	192	51
WDLSJ	292	51
WFOSJ	192	76
WFLSJ	292	76
WKLSJ	292	76
WFMSJ	442	76
WKMSJ	442	76

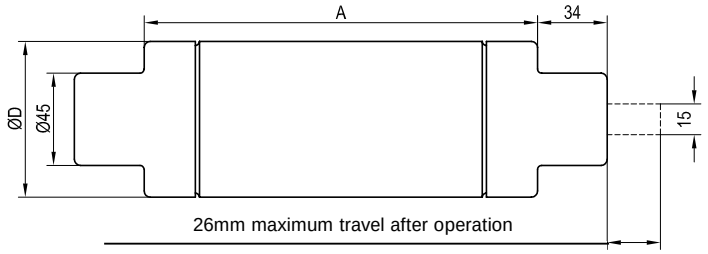

Fuse Link type: Tag Type “6” - BS 2692 Standard

FUSE LINK TYPE	A	B	C	D	E	F	G	H	J
+WJON6	257	235	192	36	9.5	13	25	23	2.4
WDO*H6	261	235	192	51	10.5	13	25	29	2.6
WFO*H6	261	235	192	76	10.5	20	64	42	2.6

+ Fuse type not available with striker

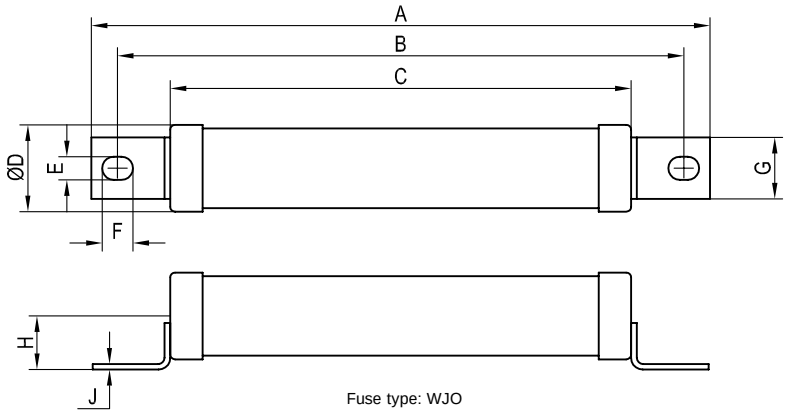

Fuse type: WJO

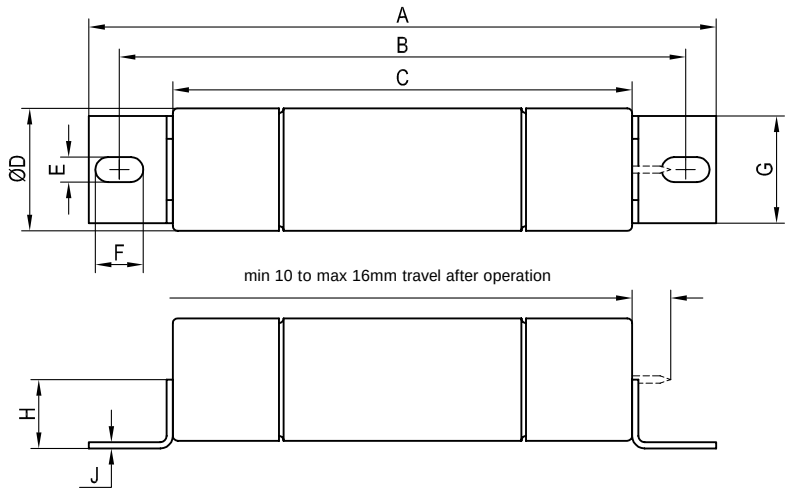

Fuse type: WDO, WFO

Dimensions in mm

Fuse Link type: Tag Type “0” - BS 2692 Standard

FUSE LINK TYPE	A	B	C	D
WDFHO	337	305	254	51
WFFHO	337	305	254	76
WKFHO	337	305	254	76
WFGHO	442	410	359	76
WKGHO	442	410	359	76
WFNHO	486	454	403	76
WKNHO	486	454	403	76

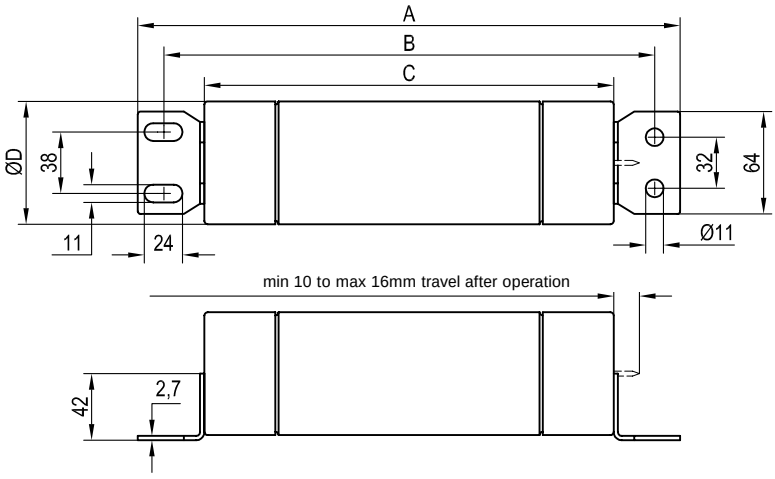

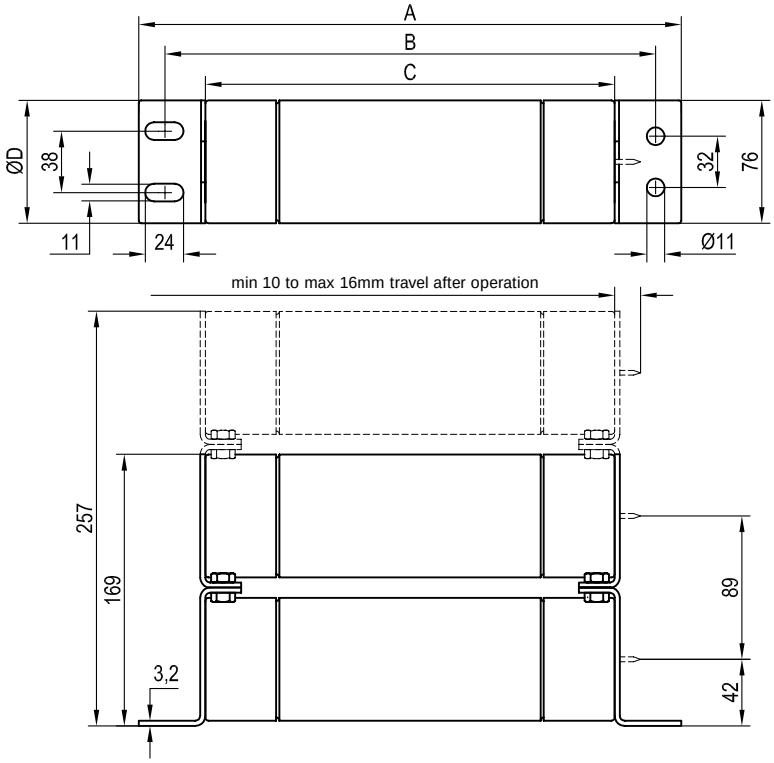

Triple barrel fuse link (3rd barrel shown dotted) with 03 tags.

Double barrel fuse link with 02 tags shown in full lines.

Fuse Link type: USA Motor

A Tags (ferrule)

FUSE LINK TYPE	A
VFRHA	276
VKRHA	276
VKRHK	276
VFNHA	403
VKNHA	403
VKNHK	403

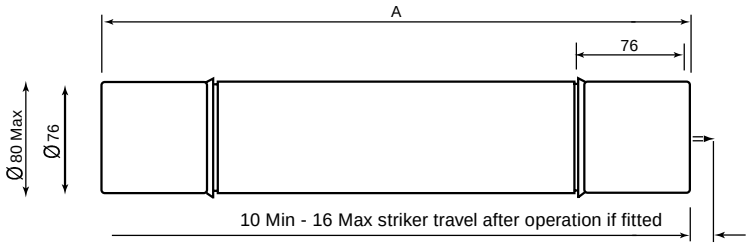

K Tags (Double barrel fuse links)

FUSE LINK TYPE	A
VFRHA	276
VKRHA	276
VKRHK	276
VFNHA	403
VKNHA	403
VKNHK	403

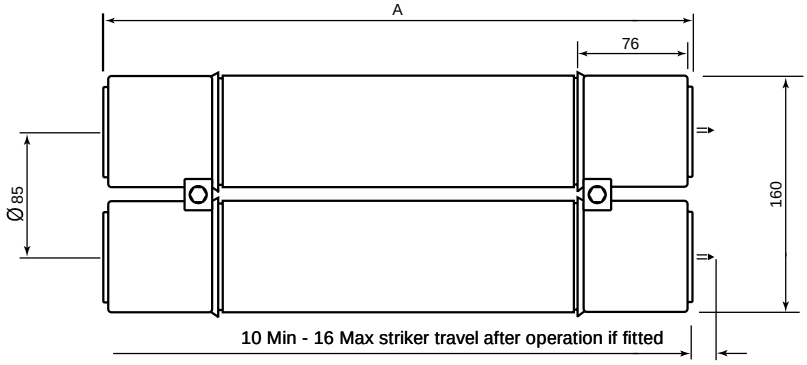

K Tags (Double barrel fuse links)

Fuse Link type: USA Motor

A Tags (ferrule)

FUSE LINK TYPE	A
VFRHA	276
VKRHA	276
VKRHK	276
VFNHA	403
VKNHA	403
VKNHK	403

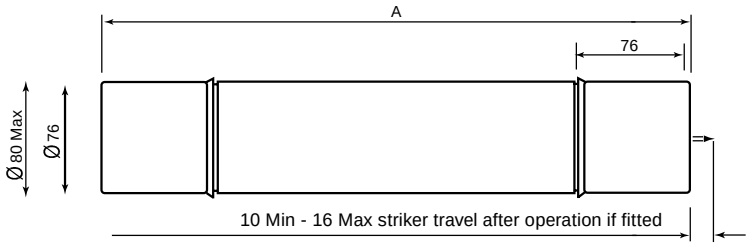

K Tags (Double barrel fuse links)

FUSE LINK TYPE	A
VFRHA	276
VKRHA	276
VKRHK	276
VFNHA	403
VKNHA	403
VKNHK	403

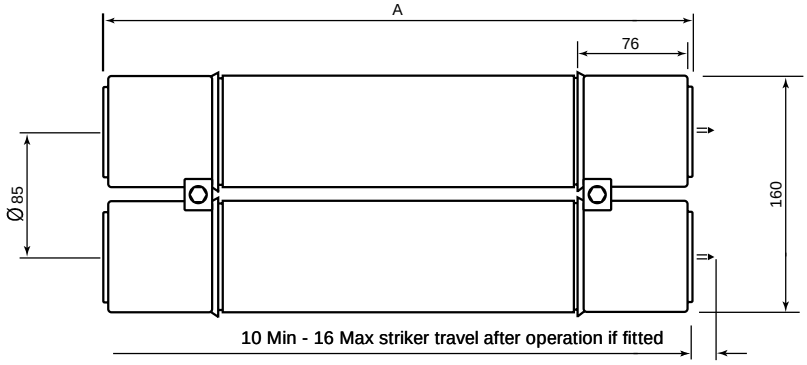

K Tags (Double barrel fuse links)

- **British Standard VT Fuse Links.**
- **A range of voltage transformer primary Fuse Links to BS2692-1 and IEC60282-1.**
- **Wide range of ratings from 1 kV to 36 kV.**
- **3.15 Amp industry standard current ratings.**
- **CAV range with ratings from 3.6kV to 38kV.**

Bussmann Voltage and Auxiliary Transformer Fuse Links

Bussmann manufacture a wide range of voltage transformer (VT) fuse links. In North America they are referred to as Potential Transformer fuses. These fuse links are designed for use in the primary side of voltage transformers to provide system isolation in the event of faults occurring in the transformer circuit.

Voltage transformer fuse links, have a preferred current rating of 3.15A. Experience has shown that there is a risk of spurious operation by transient overcurrents where lower current ratings are used. In addition, in order to minimise the risk of deterioration of the fine fuse elements caused by corona, it is desirable to mount the fuse links so that the earthed metal is not in the immediate vicinity of the part of the barrel between the ferrules.

Higher current and ‘E’ ratings are available for special applications, including auxiliary transformers.

A range of VT fuse links with a breaking capacity of 200kA for use at the output terminals of large turbo alternators can also be ordered. For further information, please contact Bussmann application engineers.

Types prefixed ‘A’ or ‘N’ are suitable for use in Air only. Types prefixed ‘O’ may be used under oil.

- **For DIN dimensioned voltage transformer and auxiliary transformer fuse links, please refer to DIN dimensioned fuse link section.**

Selection Table

Table of ratings for voltage transformer fuses 1.1 - 36kV

Part Number	Voltage Rating	Current Rating	Breaking Capacity	Cold Resistance	Joule Intergral (I^2t)		Length	Diameter Ø	Weight
	U_n	I_n	I_1		A^2s				
	kV	A	kA	Ω	Minimum Pre-Arcing	Maximum Total Clearing	mm	mm	kg
1.1NBUN*2	1.1	2	50	0.145	$6.3X10^0$	$1.8X10^1$	86	25.4	0.12
1.1NBUN*3.15	1.1	3.15	50	0.107	$1.2X10^1$	$3.4X10^1$	86	25.4	0.12
1.1NBUN*6.3	1.1	6.3	50	0.065	$3.2X10^1$	$9.2X10^1$	86	25.4	0.12
3.6ABWN*3.15	3.6	3.15	50	0.358	$6.3X10^0$	$1.8X10^1$	142	25.4	0.19
3.6ABWN*6.3	3.6	6.3	50	0.120	$4.8X10^1$	$3.1X10^2$	142	25.4	0.19
3.6ABCN*3.15	3.6	3.15	50	0.358	$6.3X10^0$	$1.8X10^1$	195	25.4	0.245
3.6ABCN*6.3	3.6	6.3	50	0.120	$4.8X10^1$	$3.1X10^2$	195	25.4	0.245
3.6ABCN*10	3.6	10	50	0.080	$1.1X10^2$	$7.0X10^2$	195	25.4	0.245
5.5AMWNA0.5E	5.5	0.5	50	32.5	$1.2X10^0$	$3.5X10^0$	142	20.6	0.114
5.5AMWNA1E	5.5	1	50	16.0	$5.0X10^0$	$1.4X10^1$	142	20.6	0.114
5.5AMWNA2E	5.5	2	50	0.584	$4.0X10^0$	$1.2X10^1$	142	20.6	0.114
5.5AMWNA3E	5.5	3	50	0.320	$1.8X10^1$	$1.1X10^2$	142	20.6	0.114
5.5AMWNA4E	5.5	4	50	0.190	$4.6X10^1$	$3.0X10^2$	142	20.6	0.114
5.5AMWNA5E	5.5	5	50	0.147	$7.9X10^1$	$5.1X10^2$	142	20.6	0.114
5.5ABWNA0.5E	5.5	0.5	50	50.2	$0.49X10^0$	$1.4X10^0$	142	25.4	0.19
5.5ABWNA1E	5.5	1	50	25.1	$2.0X10^0$	$5.7X10^0$	142	25.4	0.19
5.5ABWNA2E	5.5	2	50	1.08	$1.2X10^0$	$3.4X10^0$	142	25.4	0.19
5.5ABWNA3E	5.5	3	50	0.469	$6.3X10^0$	$1.8X10^1$	142	25.4	0.19
5.5ABWNA5E	5.5	5	50	0.199	$3.2X10^1$	$2.0X10^2$	142	25.4	0.19
7.2ABWN*3.15	7.2	3.15	45	0.614	$6.3X10^0$	$4.0X10^1$	142	25.4	0.19
7.2ABWN*6.3	7.2	6.3	45	0.240	$4.8X10^1$	$3.1X10^2$	142	25.4	0.19
7.2ABCN*3.15	7.2	3.15	45	0.614	$6.3X10^0$	$4.0X10^1$	195	25.4	0.245
7.2ABCN*6.3	7.2	6.3	45	0.240	$4.8X10^1$	$3.1X10^2$	195	25.4	0.245
7.2OBCN*3.15	7.2	3.15	45	0.614	$6.3X10^0$	4.0X10	195	25.4	0.245
7.2OBCN*6.3	7.2	6.3	45	0.240	$4.8X10^1$	$3.1X10^2$	195	25.4	0.245
7.2OBWN*3.15	7.2	3.15	45	0.614	$6.3X10^0$	4.0X10	142	25.4	0.19
7.2OBWN*6.3	7.2	6.3	45	0.240	$4.8X10^1$	$3.1X10^2$	142	25.4	0.19
12ABCN*3.15	12	3.15	45	1.21	$6.3X10^0$	$1.8X10^1$	195	25.4	0.245
12OBCN*3.15	12	3.15	45	1.21	$6.3X10^0$	$1.8X10^1$	195	25.4	0.245
15.5ABFN*3.15	15.5	3.15	32	1.24	$6.3X10^0$	$4.0X10^1$	254	25.4	0.31
15.5OBFN*3.15	15.5	3.15	32	1.24	$6.3X10^0$	$4.0X10^1$	254	25.4	0.31
17.5ABGN*3.15	17.5	3.15	35	1.45	$6.3X10^0$	$4.0X10^1$	359	25.4	0.43
17.5OBGN*3.15	17.5	3.15	35	1.45	$6.3X10^0$	$4.0X10^1$	359	25.4	0.43
24ABGN*3.15	24	3.15	25	2.00	$6.3X10^0$	$4.0X10^1$	359	25.4	0.43
24OBGN*3.15	24	3.15	25	2.00	$6.3X10^0$	$4.0X10^1$	359	25.4	0.43
36OBGN*3.15	36	3.15	31.5	2.05	$1.2X10^1$	$7.7X10^1$	359	25.4	0.43

A 36kV AGBN* 3.15A is also available for certain indoor applications. Please contact Bussmann's application engineers for further information.

* The last letter of the ordering code on these items is normally either 'A' or '22', please refer to 'how to order' page 61 for an explanation.

Fuse Link type: TAG type "A" Ferrule and "22"

FUSE LINK TYPE	A	B	D
NBUN*	86	17.5	25.4
ABWNA	142	30	25.4
AMWNA	142	16	20.5
OBWN*	142	30	25.4
ABCN*	195	30	25.4
OBCN*	195	30	25.4
ABFN*	254	30	25.4
OBFN*	254	30	25.4
ABGN*	359	30	25.4
OBGN*	359	30	25.4

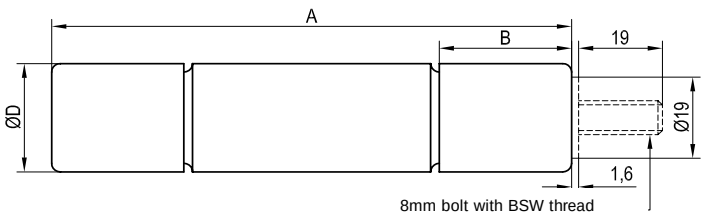

Ferrule Fuse Link Tag type "A" shown in full lines and "22" Tag shown in dotted lines

Time current characteristics for 3.6 to 36kV VT Fuse Links of 3.15, 6.3 and 10 Amp ratings

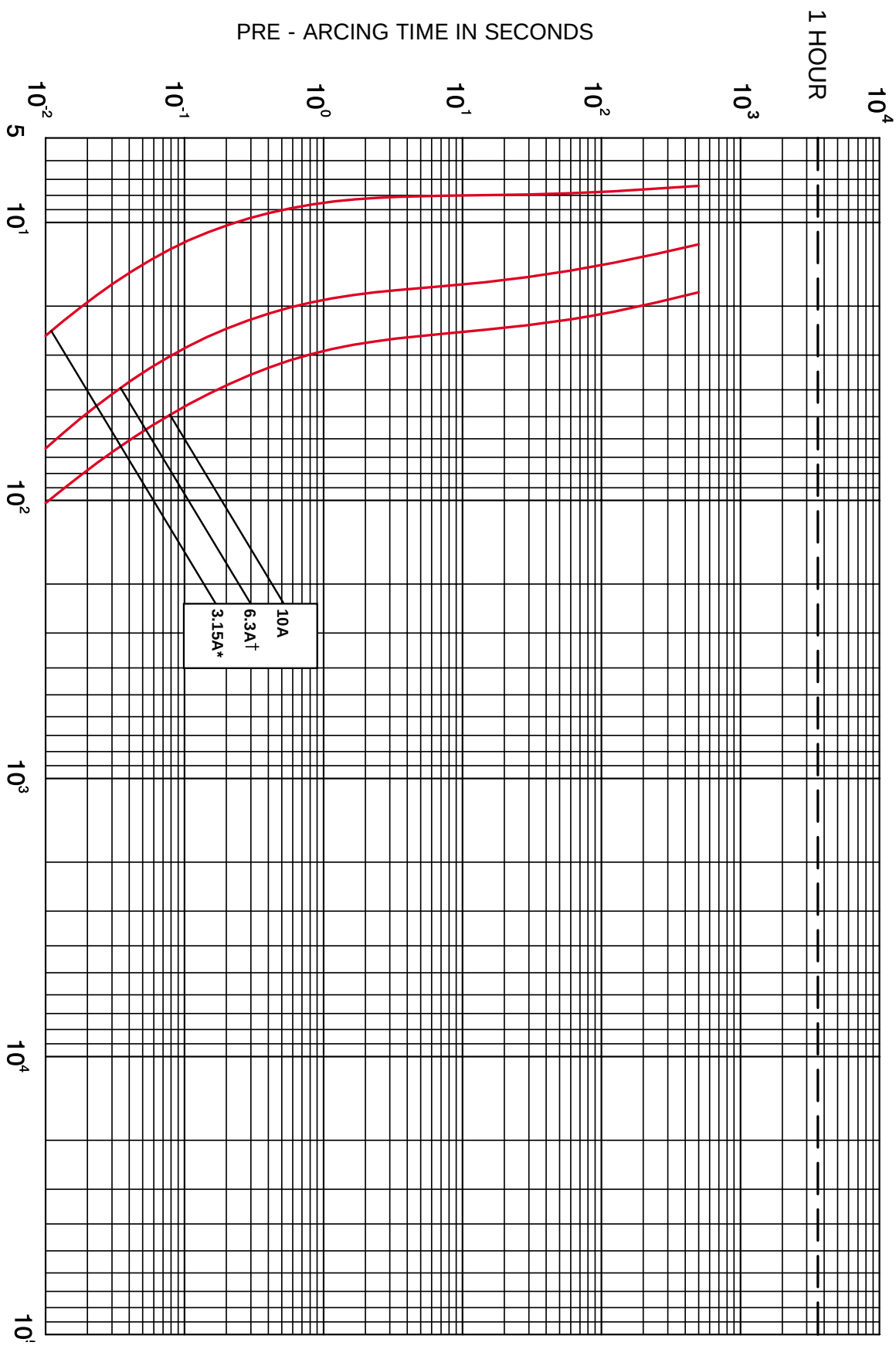

* Curve valid for all 3.15A ratings shown in the selection table.
† Curve valid for all 6.3A ratings shown in the selection table.

Time current characteristics for E rated 5.5kV VT Fuse Links, fuse type ABWNA (minimum melting times)

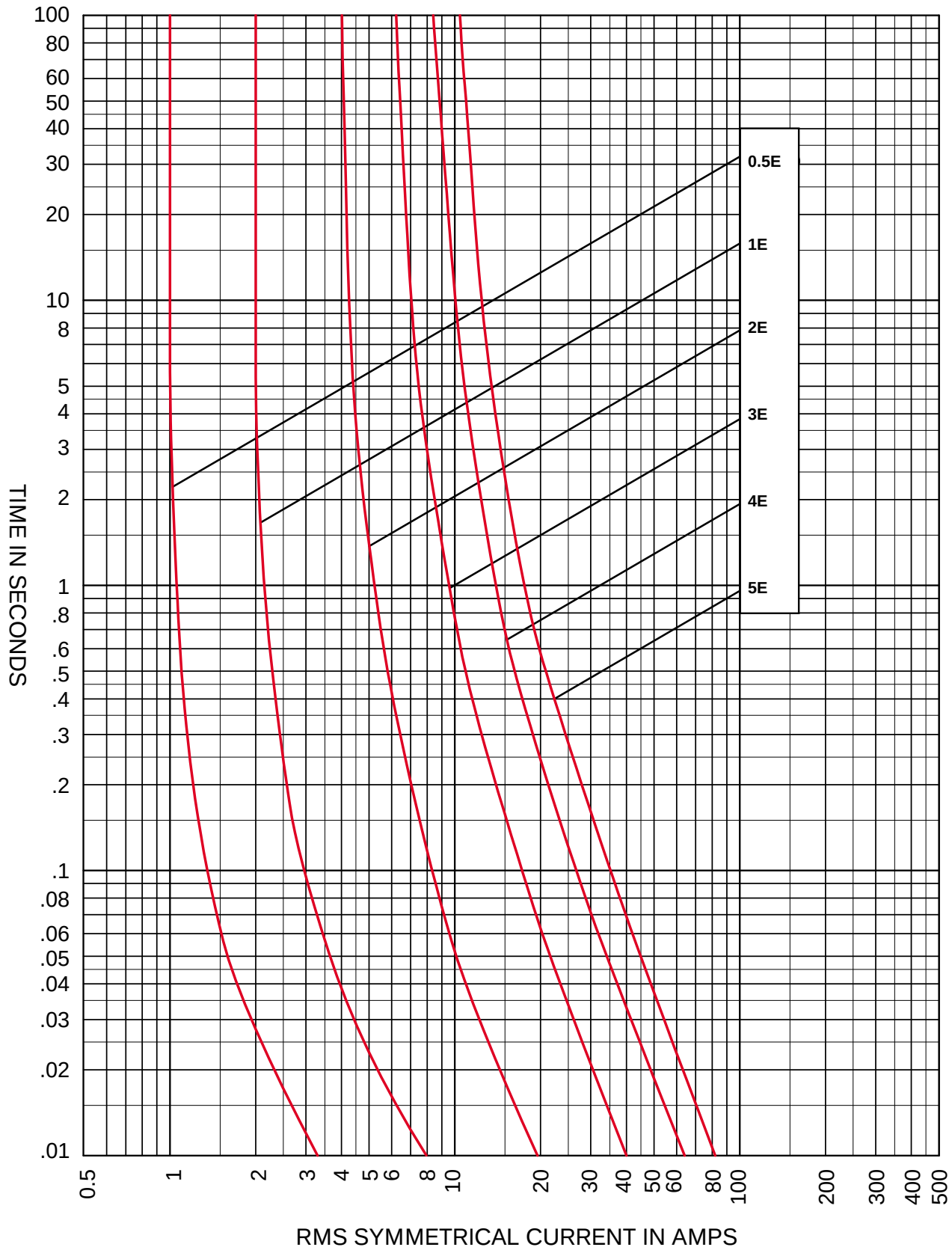

Time current characteristics for E rated 5.5kV VT Fuse Links, fuse type ABWNA (maximum melting times)

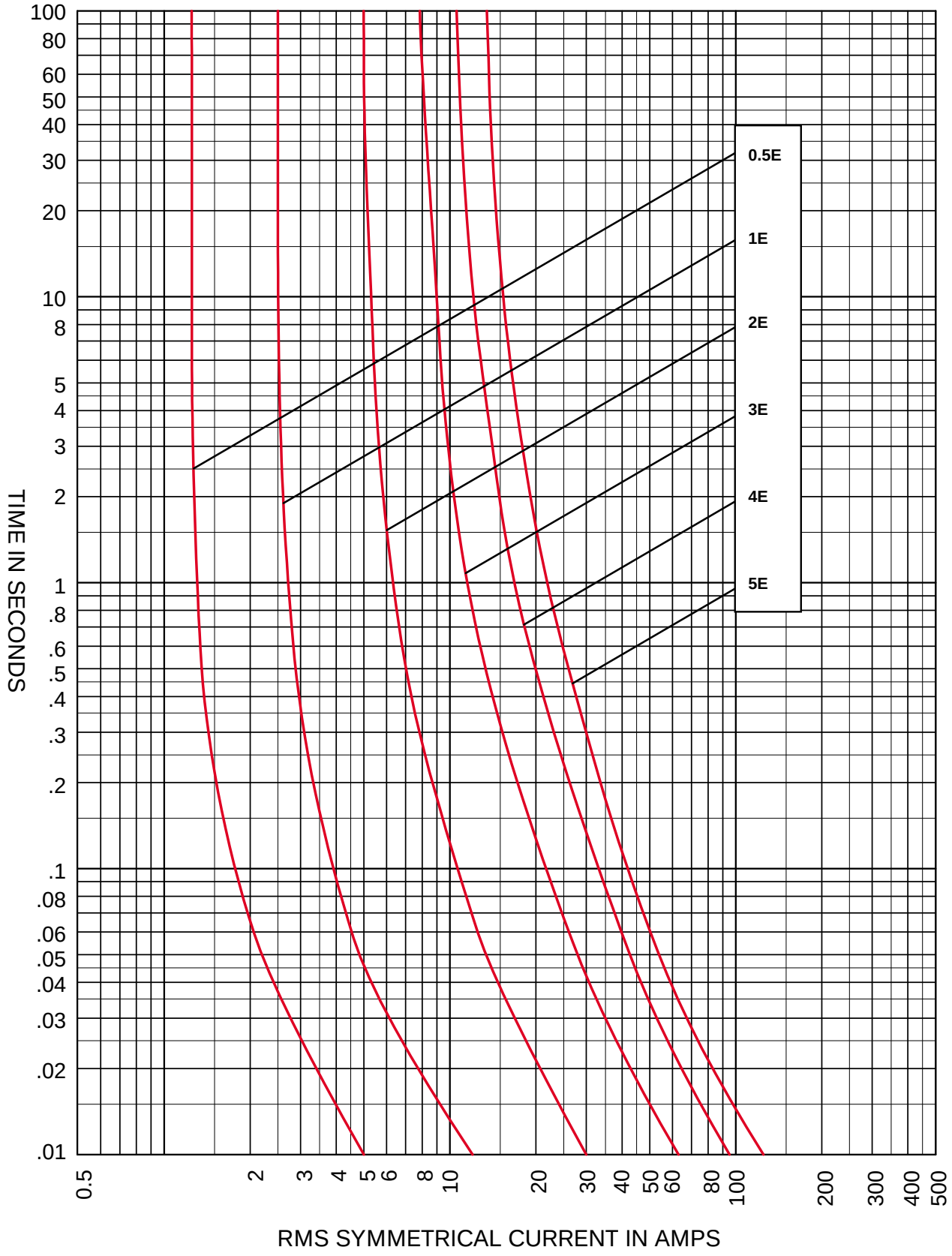

Time current characteristics for E rated 5.5kV VT Fuse Links, fuse type AMWNA (minimum melting times)

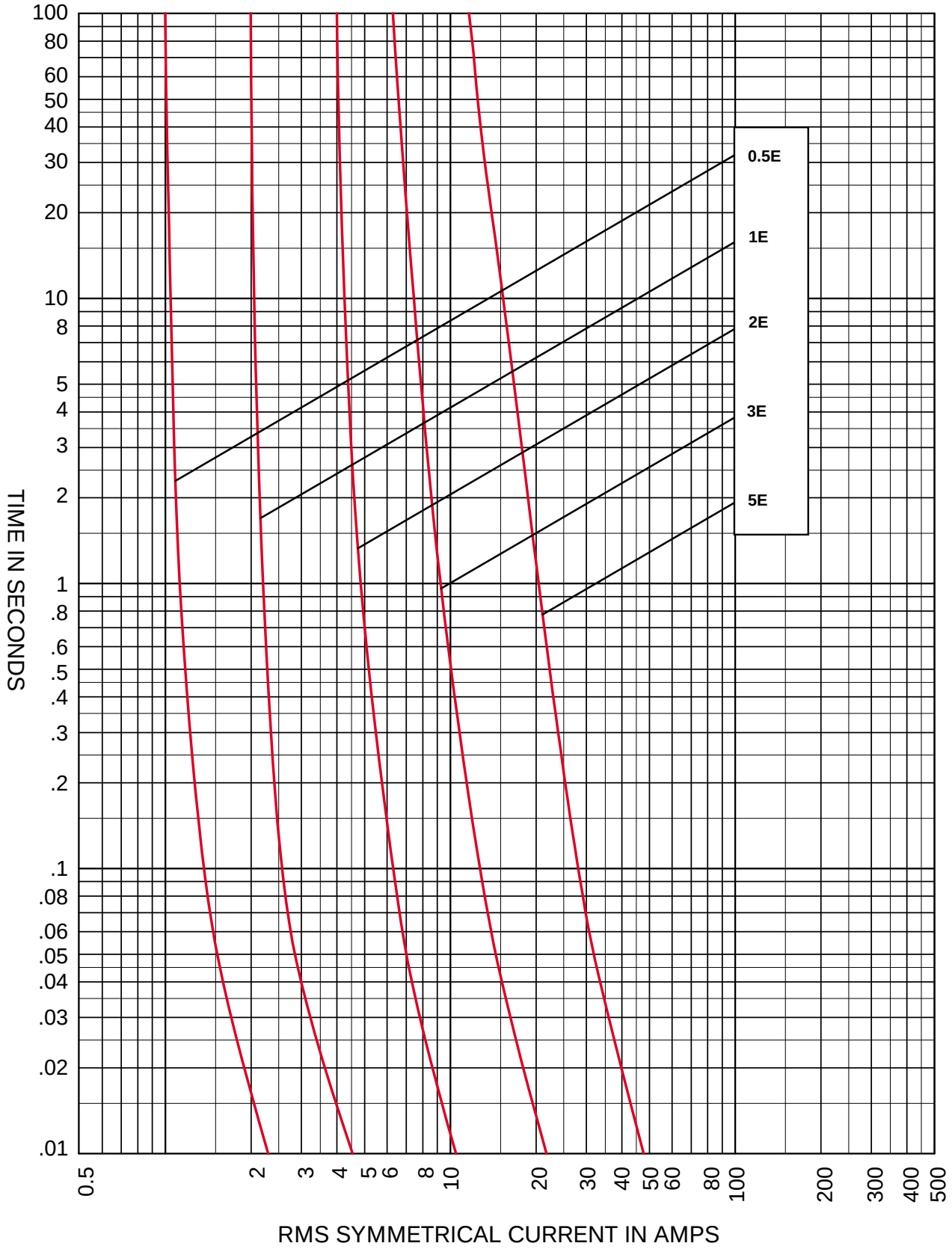

Time current characteristics for E rated 5.5kV VT Fuse Links, fuse type AMWNA (maximum melting times)

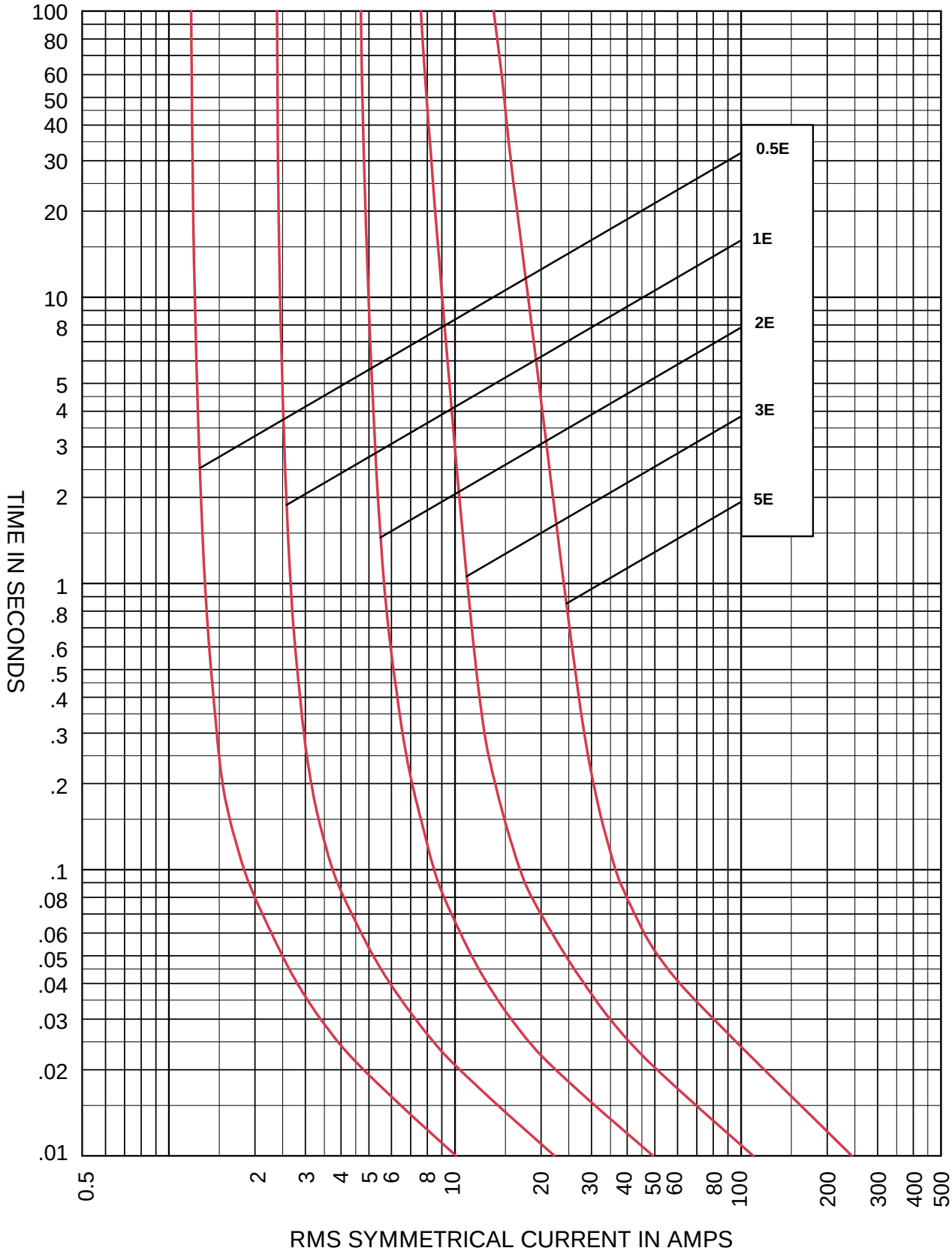

Selection Table

Table of ratings for voltage transformer fuses, 3.6 - 38kV type CAV

Part Number	Voltage Rating	Current Rating	Breaking Capacity	Cold resistance in free air at rated current	Joule Intergral (I^2t)		Length	Diameter Ø	Weight
	U_n	I_n	I_1		A^2s				
	kV	A	kA	Ω	Minimum Pre-Arcing	Maximum Total Clearing	mm	mm	kg
3.6CAV2	3.6	2	50	0.492	$6.2X10^0$	$1.8X10^1$	220	41.3	0.7
5.5 CAV15E	5.5	15	50	0.488	$5.5X10^2$	$3.5X10^3$	187	41.3	0.6
5.5CAVH0.5E	5.5	0.5	50	12.1	$1.4X10^1$	$9.0X10^1$	187	41.3	0.6
5.5CAVH1E	5.5	1	50	12.1	$1.4X10^1$	$9.0X10^1$	187	41.3	0.6
5.5CAVH2E	5.5	2	50	0.388	$1.8X10^1$	$1.1X10^2$	187	41.3	0.6
7.2CAV2	7.2	2	40	0.893	$6.2X10^0$	$1.8X10^1$	220	41.3	0.7
7.2CAV4	7.2	4	40	0.503	$2.0X10^1$	$5.7X10^1$	220	41.3	0.7
7.2CAV6	7.2	6	40	0.321	$4.8X10^1$	$1.4X10^2$	220	41.3	0.7
7.2CAV10	7.2	10	40	0.215	$1.1X10^2$	$3.2X10^2$	220	41.3	0.7
12CAV2	12	2	40	1.34	$6.2X10^0$	$1.8X10^1$	220	41.3	0.7
15.5CAV0.5E	15.5	0.5	80	151	$0.5X10^0$	$1.5X10^0$	327	41.3	0.9
15.5CAV1E	15.5	1	80	75.4	$2.0X10^0$	$5.8X10^0$	327	41.3	0.9
15.5CAV2E	15.5	2	80	32.3	$1.2X10^0$	$3.5X10^0$	327	41.3	0.9
15.5CAV3E	15.5	3	80	16.2	$4.8X10^0$	$1.4X10^1$	327	41.3	0.9
15.5CAV5E	15.5	5	80	0.659	$2.0X10^1$	$1.3X10^2$	327	41.3	0.9
15.5CAV7E	15.5	7	80	0.375	$7.1X10^1$	$4.5X10^2$	327	41.3	0.9
15.5CAVH0.5E	15.5	0.5	80	30.1	$1.4X10^1$	$9.0X10^1$	327	41.3	0.9
15.5CAVH1E	15.5	1	80	30.1	$1.4X10^1$	$9.0X10^1$	327	41.3	0.9
15.5CAVH2E	15.5	2	80	0.947	$1.8X10^1$	$1.1X10^2$	327	41.3	0.9
17.5CAV2	17.5	2	40	1.69	$6.3X10^0$	$1.8X10^1$	220	41.3	0.7
17.5CAV4	17.5	4	40	0.611	$4.8X10^1$	$1.4X10^2$	220	41.3	0.7
17.5CAV6	17.5	6	40	0.362	$1.4X10^2$	$4.0X10^2$	220	41.3	0.7
17.5CAV10	17.5	10	40	0.239	$3.2X10^2$	$9.2X10^2$	220	41.3	0.7
24CAV2	24	2	40	2.54	$6.2X10^0$	$1.8X10^1$	340	41.3	1.0
24CAV3	24	3	40	1.43	$2.0X10^1$	$5.7X10^1$	340	41.3	1.0
24CAV4	24	4	40	0.916	$4.8X10^1$	$1.4X10^2$	340	41.3	1.0
36CAV2	36	2	40	3.12	$6.2X10^0$	$1.8X10^1$	440	41.3	1.2
36CAV4	36	4	40	1.12	$4.8X10^1$	$1.4X10^2$	440	41.3	1.2
38CAV4E	38	4	40	2.42	$1.2X10^1$	$3.4X10^1$	440	41.3	1.2
38CAVH0.5E	38	0.5	40	66.6	$1.4X10^1$	$9.0X10^1$	440	41.3	1.2
38CAVH1E	38	1	40	66.6	$1.4X10^1$	$9.0X10^1$	440	41.3	1.2
38CAVH2E	38	2	40	2.20	$1.8X10^1$	$1.1X10^2$	440	41.3	1.2

- These Voltage Transformer fuse links are available in the ratings shown in the table above. CAV fuse links are suitable for indoor use in air only. Type CAVH Fuse links are fitted with striker pins which may be used for indication purposes.

Fuse Link type: CAV (Shown with striker fitted)

FUSE LINK TYPE	A
3.6CAV	220
5.5CAV 5.5CAVH	187
7.2CAV	220
12CAV	220
15.5CAV 15.5CAVH	327
17.5CAV	220
24CAV	340
36CAV	440
38CAV 38CAVH	440

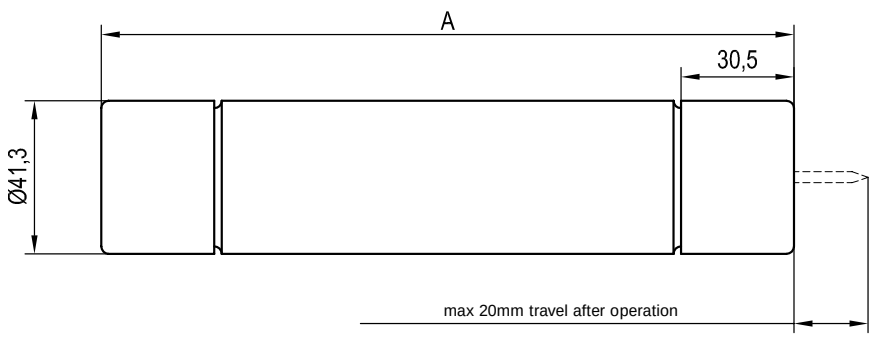

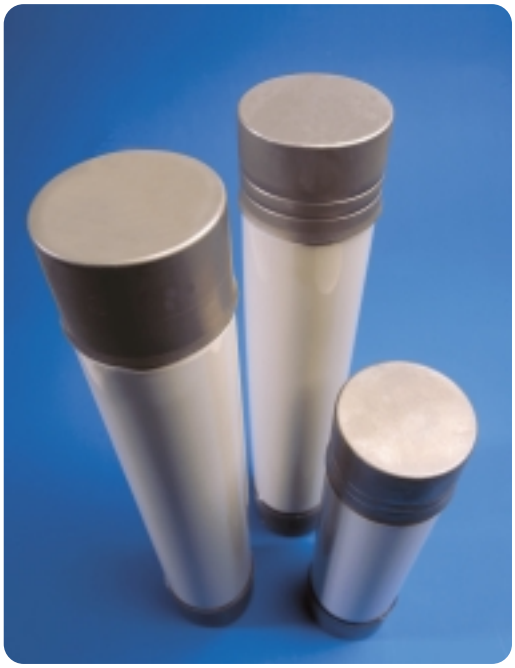

- **Fuse Links comply with IEC 282-1, BS2692-1 and ESI Standard 12-8.**
- **7.2 and 12kV Fuse Links tested at highest system voltage and approved by the UK Electricity Association approvals panel.**
- **Voltage ranges 3.6 to 24kV.**
- **Fitted with powerful pyrotechnic striker pin.**

Bussmann under oil Fuse Links

The Bussmann range of oil tight fuse links are designed for use in oil filled switchgear. This type was pioneered in the U.K. and the Bussmann range has been in continuous manufacture for almost 40 years, being by far the most widely used device of its kind in the world. Over 1,000,000 Bussmann branded fuse links have been put into service without a single reported case of oil ingress. A unique triple seal system ensures against long term seal deterioration. Low power dissipation ensures cool running in oil filled switchgear.

The range is not suitable for use inside oil filled transformer tanks where high oil temperatures may be expected.

Current Limiting Fuse Links for use in Oil Switchgear

Dimensions (mm)

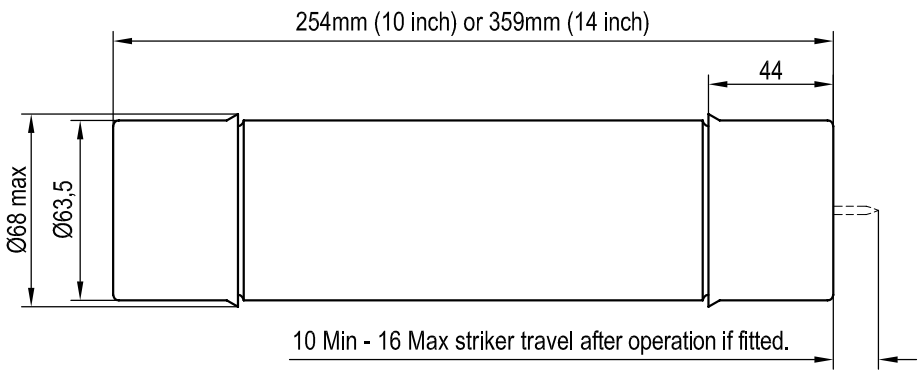

Selection Table

Table of ratings for British Standard Oil tight fuses 3.6 - 24kV

Part Number	Voltage Rating	Current Rating	Breaking Capacity	Dimensional Reference	Cold resistance in free air at rated current	Joule Intergral (I^2t)		Length	Diameter Ø	Weight
	U_n	I_n	I_1	BS 2692		A^2s				
	kV	A	kA		m Ω	Minimum Pre-Arcing	Maximum Total Clearing	mm	mm	kg
3.6OEFMA6.3	3.6	6.3	50	F01	207	$2.0X10^1$	$4.9X10^2$	254	63.5	1.9
3.6OEFMA10	3.6	10	50		83.6	$1.4X10^2$	$1.4X10^3$	254	63.5	1.9
3.6OEFMA16	3.6	16	50		42.5	$1.7X10^2$	$2.4X10^3$	254	63.5	1.9
3.6OEFMA20	3.6	20	50		33.9	$2.7X10^2$	$3.6X10^3$	254	63.5	1.9
3.6OEFMA25	3.6	25	50		26.5	$4.5X10^2$	$4.8X10^3$	254	63.5	1.9
3.6OEFMA31.5	3.6	31.5	50		17.6	$1.0X10^3$	$8.8X10^3$	254	63.5	1.9
3.6OEFMA40	3.6	40	50		15.4	$8.9X10^3$	$1.0X10^4$	254	63.5	1.9
3.6OEFMA50	3.6	50	50		11.5	$1.6X10^3$	$1.4X10^4$	254	63.5	1.9
3.6OEFMA63	3.6	63	50		7.60	$3.3X10^3$	$2.4X10^4$	254	63.5	1.9
3.6OEFMA80	3.6	80	50		6.03	$5.2X10^3$	$3.4X10^4$	254	63.5	1.9
3.6OEFMA100	3.6	100	50		4.02	$1.2X10^4$	$6.2X10^4$	254	63.5	1.9
3.6OEFMA125	3.6	125	50		3.02	$2.1X10^4$	$9.6X10^4$	254	63.5	1.9
3.6OEFMA160	3.6	160	50		2.21	$1.5X10^4$	$1.6X10^5$	254	63.5	1.9
3.6OEFMA200	3.6	200	50		1.74	$2.4X10^4$	$2.3X10^5$	254	63.5	1.9
3.6OEGMA63	3.6	63	50	F02	11.0	$3.2X10^3$	$1.9X10^4$	254	63.5	2.6
3.6OEGMA80	3.6	80	50		8.70	$5.2X10^3$	$2.7X10^4$	254	63.5	2.6
3.6OEGMA100	3.6	100	50		5.50	$5.0X10^3$	$4.9X10^4$	254	63.5	2.6
3.6OEGMA125	3.6	125	50		4.59	$7.2X10^3$	$6.4X10^4$	254	63.5	2.6
3.6OEGMA160	3.6	160	50		3.44	$1.3X10^4$	$1.0X10^5$	254	63.5	2.6
3.6OEGMA200	3.6	200	50		2.29	$2.9X10^4$	$1.8X10^5$	254	63.5	2.6
3.6OLGMA250	3.6	250	50	F02	1.72	$5.1X10^4$	$2.7X10^5$	254	63.5	2.6
7.2OEFMA80	7.2	80	45	F01	8.36	$3.2X10^3$	$5.8X10^4$	254	63.5	1.9
7.2OEFMA100	7.2	100	45		5.59	$6.3X10^3$	$9.0X10^4$	254	63.5	1.9
7.2OEFMA112	7.2	112	45		4.57	$9.1X10^3$	$1.3X10^5$	254	63.5	1.9
7.2OHGMA100	7.2	100	45	F02	6.09	$5.0X10^3$	$7.5X10^4$	359	63.5	2.6
7.2OHGMA125	7.2	125	45		5.08	$7.2X10^3$	$9.6X10^4$	359	63.5	2.6
7.2OHGMA140	7.2	140	45		4.35	$9.8X10^3$	$1.4X10^5$	359	63.5	2.6
7.2OHGMA160	7.2	160	45		3.81	$1.3X10^4$	$1.8X10^5$	359	63.5	2.6
12OEFMA6.3	12	6.3	40	F01	520	$2.0X10^1$	$6.1X10^2$	254	63.5	1.9
12OEFMA10	12	10	40		214	$1.4X10^2$	$1.8X10^3$	254	63.5	1.9
12OEFMA16	12	16	40		108	$1.7X10^2$	$3.0X10^3$	254	63.5	1.9
12OEFMA20	12	20	40		77.0	$3.4X10^2$	$5.0X10^3$	254	63.5	1.9
12OEFMA25	12	25	40		57.8	$4.0X10^2$	$6.5X10^3$	254	63.5	1.9
12OEFMA31.5	12	31.5	40		38.5	$8.9X10^2$	$1.2X10^4$	254	63.5	1.9
12OEFMA40	12	40	40		28.2	$1.5X10^3$	$1.8X10^4$	254	63.5	1.9
12OEFMA50	12	50	40		20.1	$2.9X10^3$	$2.8X10^4$	254	63.5	1.9
12OEFMA63	12	63	40		15.1	$5.1X10^3$	$4.3X10^4$	254	63.5	1.9
12OHFMA71	12	71	45	F01	12.3	$3.2X10^3$	$5.4X10^4$	254	63.5	1.9
12OHFMA80	12	80	45		10.9	$4.1X10^3$	$7.0X10^4$	254	63.5	1.9
12OHGMA6.3	12	6.3	40	F02	520	$2.0X10^1$	$6.1X10^2$	359	63.5	2.6
12OHGMA10	12	10	40		214	$1.4X10^2$	$1.8X10^3$	359	63.5	2.6
12OHGMA16	12	16	40		108	$1.7X10^2$	$3.0X10^3$	359	63.5	2.6
12OHGMA20	12	20	40		77.0	$3.4X10^2$	$5.0X10^3$	359	63.5	2.6
12OHGMA25	12	25	40		57.8	$4.0X10^2$	$6.5X10^3$	359	63.5	2.6
12OHGMA31.5	12	31.5	40		38.5	$8.9X10^2$	$1.2X10^4$	359	63.5	2.6
12OHGMA40	12	40	40		28.2	$1.5X10^3$	$1.8X10^4$	359	63.5	2.6
12OHGMA50	12	50	40		22.6	$2.3X10^3$	$2.4X10^4$	359	63.5	2.6
12OHGMA63	12	63	40		17.0	$4.1X10^3$	$3.7X10^4$	359	63.5	2.6
12OHGMA71	12	71	40		16.6	$2.0X10^3$	$3.9X10^4$	359	63.5	2.6
12OHGMA80	12	80	40		13.4	$3.2X10^3$	$5.5X10^4$	359	63.5	2.6
12OHGMA90	12	90	40		12.2	$3.8X10^3$	$6.2X10^4$	359	63.5	2.6
12OHGMA100	12	100	40		8.75	$6.3X10^3$	$8.9X10^4$	359	63.5	2.6
12OLGMA125	12	125	40	F02	7.09	$1.0X10^4$	$1.7X10^5$	359	63.5	2.6
15.5OEFMA6.3	15.5	6.3	40	F01	392	$4.8X10^1$	$1.0X10^3$	254	63.5	1.9
15.5OEFMA10	15.5	10	40		188	$4.0X10^1$	$3.4X10^3$	254	63.5	1.9
15.5OEFMA16	15.5	16	40		101	$2.7X10^1$	$3.4X10^3$	254	63.5	1.9
15.5OEFMA20	15.5	20	40		78.7	$4.5X10^1$	$4.9X10^3$	254	63.5	1.9
15.5OEFMA25	15.5	25	40		55.3	$5.2X10^1$	$1.1X10^4$	254	63.5	1.9
15.5OEFMA31.5	15.5	31.5	40		36.9	$1.2X10^3$	$1.5X10^4$	254	63.5	1.9
15.5OEFMA40	15.5	40	40		29.5	$1.8X10^3$	$2.0X10^4$	254	63.5	1.9
15.5OEFMA50	15.5	50	40		22.1	$3.3X10^3$	$3.0X10^4$	254	63.5	1.9
15.5OEFMA63	15.5	63	40		17.8	$2.0X10^3$	$3.9X10^4$	254	63.5	1.9
15.5OHGMA71	15.5	71	40	F02	17.7	$2.5X10^3$	$4.4X10^4$	359	63.5	2.6
15.5OHGMA80	15.5	80	40		15.5	$3.2X10^3$	$5.4X10^4$	359	63.5	2.6
15.5OHGMA90	15.5	90	40		11.6	$5.0X10^3$	$7.5X10^4$	359	63.5	2.6
15.5OLGMA100	15.5	100	40	F02	10.0	$7.2X10^3$	$9.6X10^4$	359	63.5	2.6
17.5OHGMA6.3	17.5	6.3	35	F02	665	$2.0X10^1$	$6.1X10^2$	359	63.5	2.6
17.5OHGMA10	17.5	10	35		282	$1.4X10^2$	$1.8X10^3$	359	63.5	2.6
17.5OHGMA16	17.5	16	35		139	$1.7X10^2$	$3.0X10^3$	359	63.5	2.6
1 7.5OHGMA20	17.5	20	35		100	$3.4X10^2$	$5.0X10^3$	359	63.5	2.6
17.5OHGMA25	17.5	25	35		74.7	$4.0X10^2$	$6.5X10^3$	359	63.5	2.6
17.5OHGMA31.5	17.5	31.5	35		49.8	$9.0X10^2$	$1.2X10^4$	359	63.5	2.6
17.5OHGMA40	17.5	40	35		36.5	$1.5X10^3$	$1.9X10^4$	359	63.5	2.6
17.5OHGMA50	17.5	50	35		26.0	$2.9X10^3$	$2.9X10^4$	359	63.5	2.6
17.5OHGMA63	17.5	63	35		19.5	$5.2X10^3$	$4.5X10^4$	359	63.5	2.6
17.5OHGMA80	17.5	80	35		15.5	$3.8X10^3$	$5.7X10^4$	359	63.5	2.6
24OEGMA6.3	24	6.3	25	F02	605	$4.8X10^1$	$1.0X10^3$	359	63.5	2.6
24OEGMA10	24	10	25		290	$2.5X10^2$	$3.4X10^3$	359	63.5	2.6
24OEGMA16	24	16	25		153	$2.7X10^2$	$3.4X10^3$	359	63.5	2.6
24OEGMA20	24	20	25		119	$4.4X10^2$	$4.9X10^3$	359	63.5	2.6
24OEGMA25	24	25	25		84.5	$5.2X10^2$	$1.1X10^4$	359	63.5	2.6
24OEGMA31.5	24	31.5	25		55.9	$1.2X10^3$	$1.5X10^4$	359	63.5	2.6
24OEGMA40	24	40	25		44.7	$1.8X10^3$	$2.0X10^4$	359	63.5	2.6
24OEGMA50	24	50	25		34.0	$1.2X10^3$	$2.4X10^4$	359	63.5	2.6

General guide to the selection of Oil tight Fuse Links for use in the primary circuit of three phase transformers

Transformer Priority Voltage

Transformer kVA	3.3kV			6.6kV			11kV				13.8kV		
	Product Code	Current Rating (A)	Rating kV	Product Code	Current Rating (A)	Rating kV	ESI 12-8 Ref.	Product Code	Current Rating (A)	Rating kV	Product Code	Current Rating (A)	Rating kV
200	OEFMA	63	3.6	OEFMA	31.5	12	01	OEFMA	25	12	OEFMA	16	15.5
250	OEFMA	80	3.6	OEFMA	40	12	-	OEFMA	25	12	OEFMA	20	15.5
300/315	OEFMA	100	3.6	OEFMA	50	12	02	OEFMA	31.5	12	OEFMA	25	15.5
400	OEFMA	125	3.6	OEFMA	63	12	-	OEFMA	40	12	OEFMA	31.5	15.5
500	OEFMA	160	3.6	OEFMA	71	12	03	OEFMA	50	12	OEFMA	40	15.5
630	OEFMA	200	3.6	OEFMA	100	7.2	-	OEFMA	63	12	OEFMA	50	15.5
750/800	OLGMA	250	3.6	OHGMA	125	7.2	04	OHFMA	80	12	OEFMA	63	15.5
1000	OLGMA	250*	3.6	OHGMA	140	7.2	05	OGFMA	90†	12	OHGMA	71	15.5
1250	-	-	-	OHGMA	160*	7.2	-	OGFMA	100	12	OHGMA	90	15.5
1600	-	-	-	-	-	-	-	OLGMA	125*	12	OLGMA	100*	15.5

Selection of these fuse links has been based on a compromise between the following:

1 Withstand against magnetising inrush current is taken as 12 times full-load current for 0.1 second.

2 Withstand against 150% permissible overload current. Recommendations marked with an asterisk or dagger have the following significance:

* Limited to permissible overload of 130%
† Permits use of a 12kV OHFMA 80A fuse with a 1000 kVA transformer where permissible overload does not exceed 130%.

3 For 6.6kV systems, 12kV fuse links are recommended where possible in the interests of standardisation.

4 Wherever possible, 254mm long fuse links are offered rather than equivalent 359mm types.

5 The above recommendations are not generally applicable to transformers feeding motor circuits with starting currents in excess of the transformer full load current. In this event, please consult Bussmann application engineers.

Time current characteristics for 7.2kV Oil Fuse Links, fuse type OEF

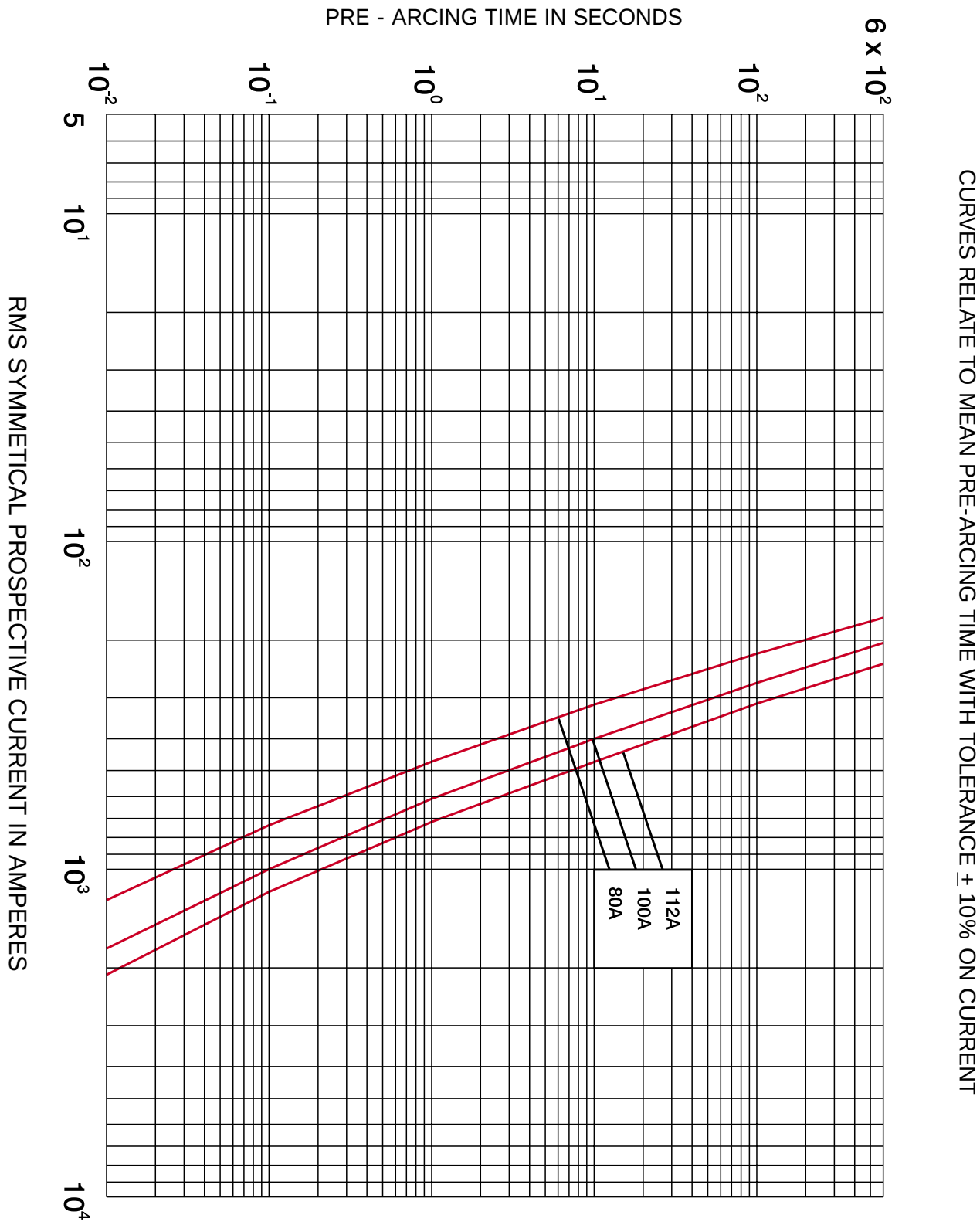

Time current characteristics for 7.2kV Oil Fuse Links, fuse type OHG

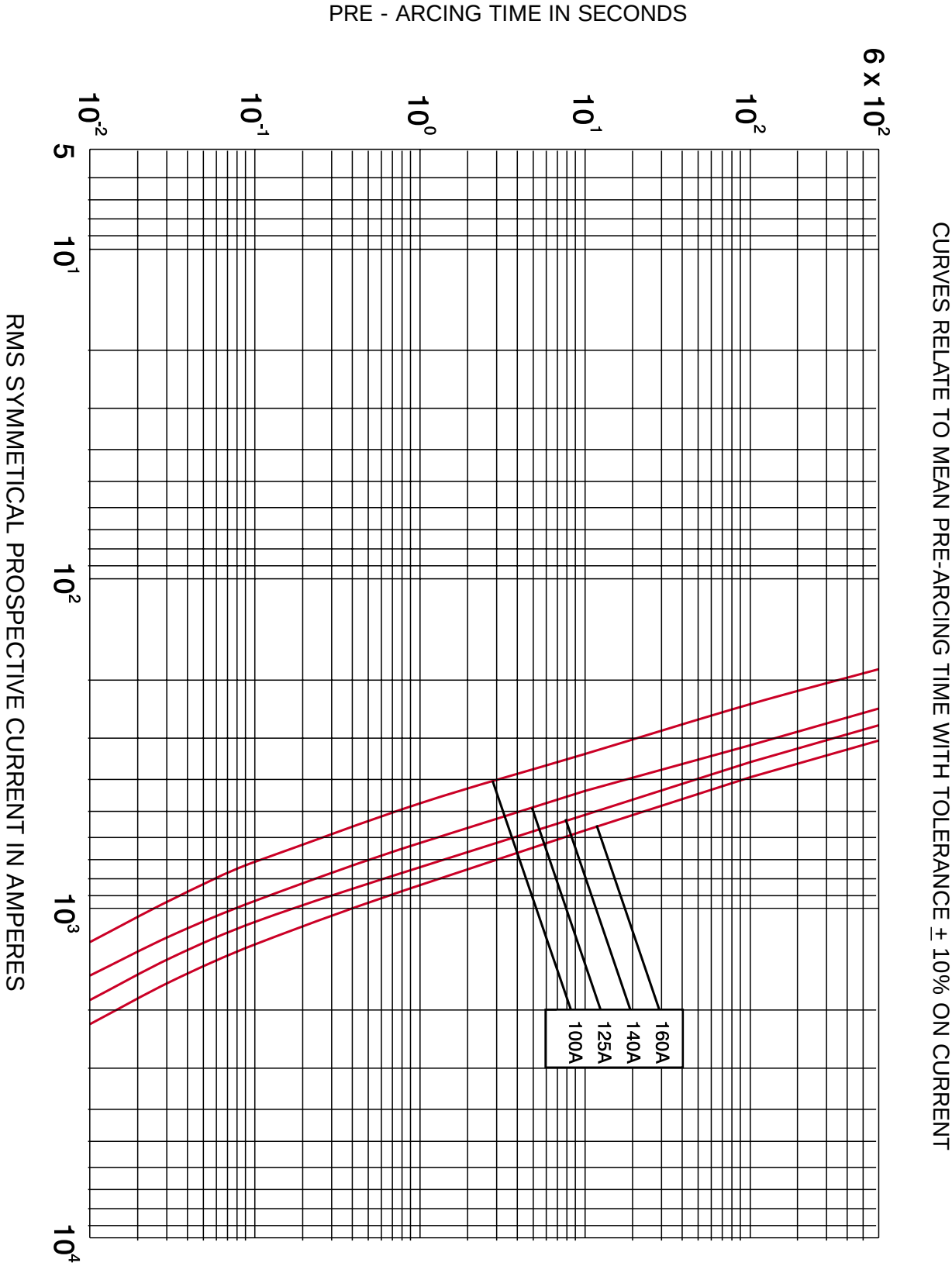

Time current characteristics for 12kV Oil Fuse Links, fuse types OEF and OHF

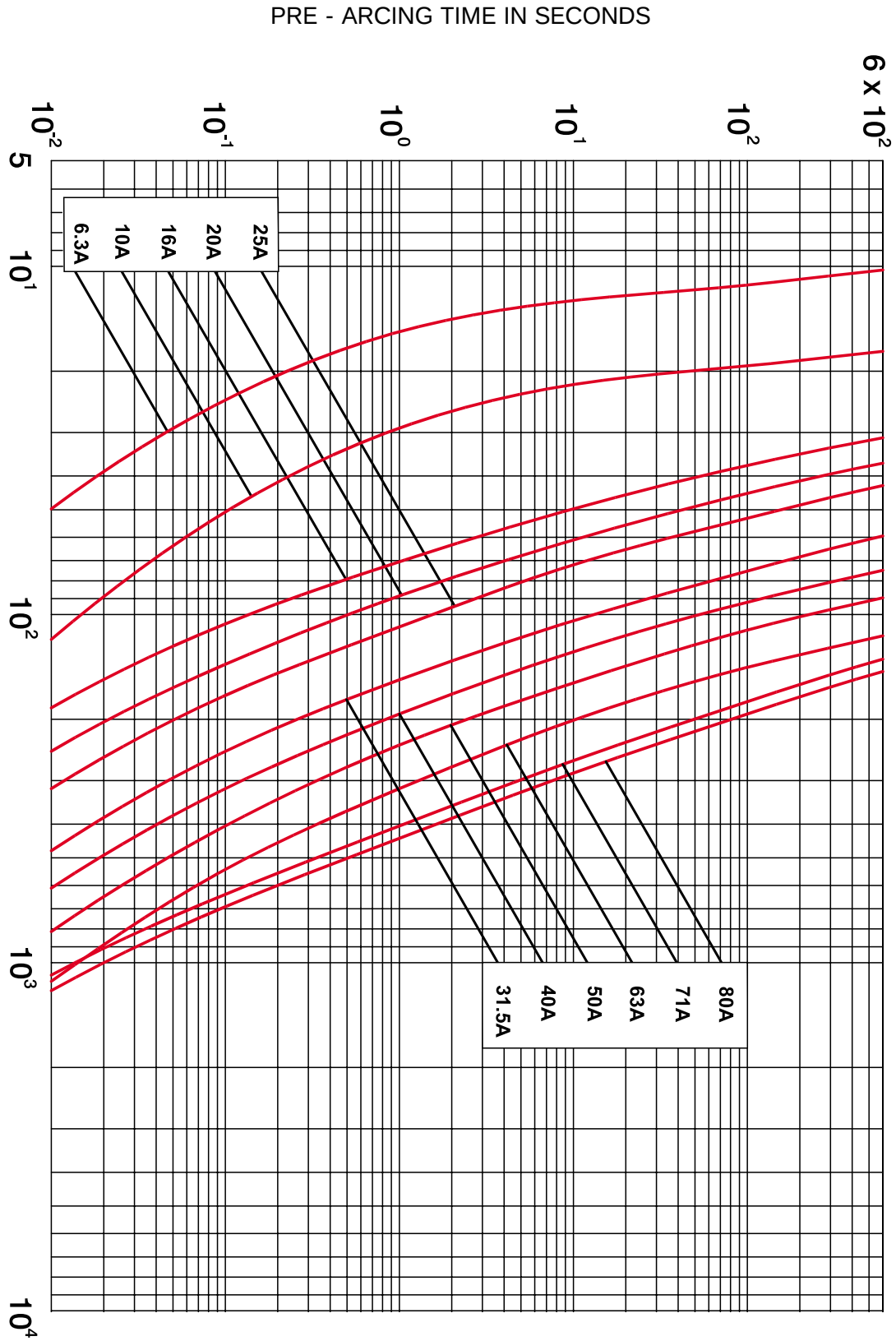

Time current characteristics for 12kV Oil Fuse Links, fuse types OHG and OLG

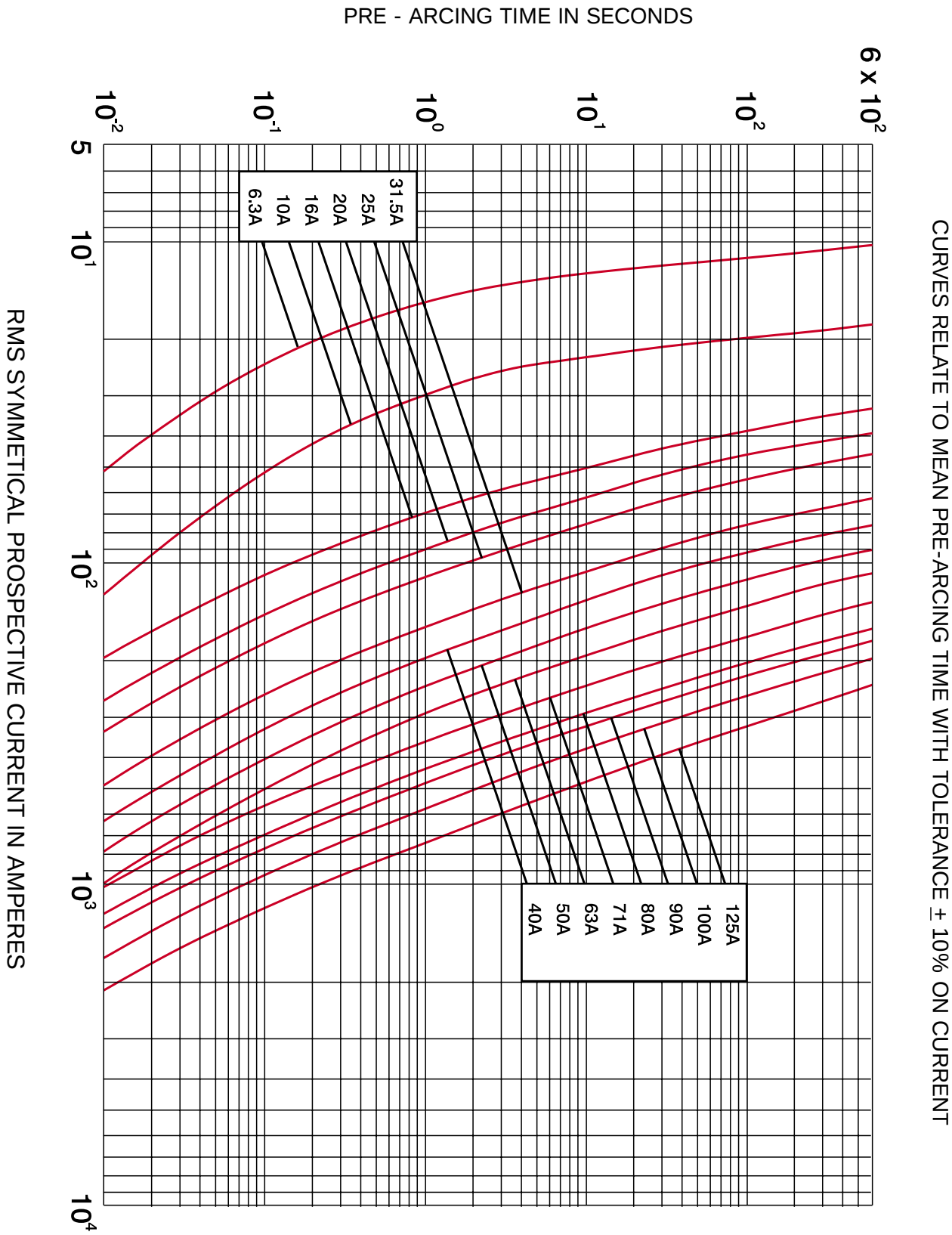

Time current characteristics for 15.5kV Oil Fuse Links, fuse types OEF, OHG and OLG

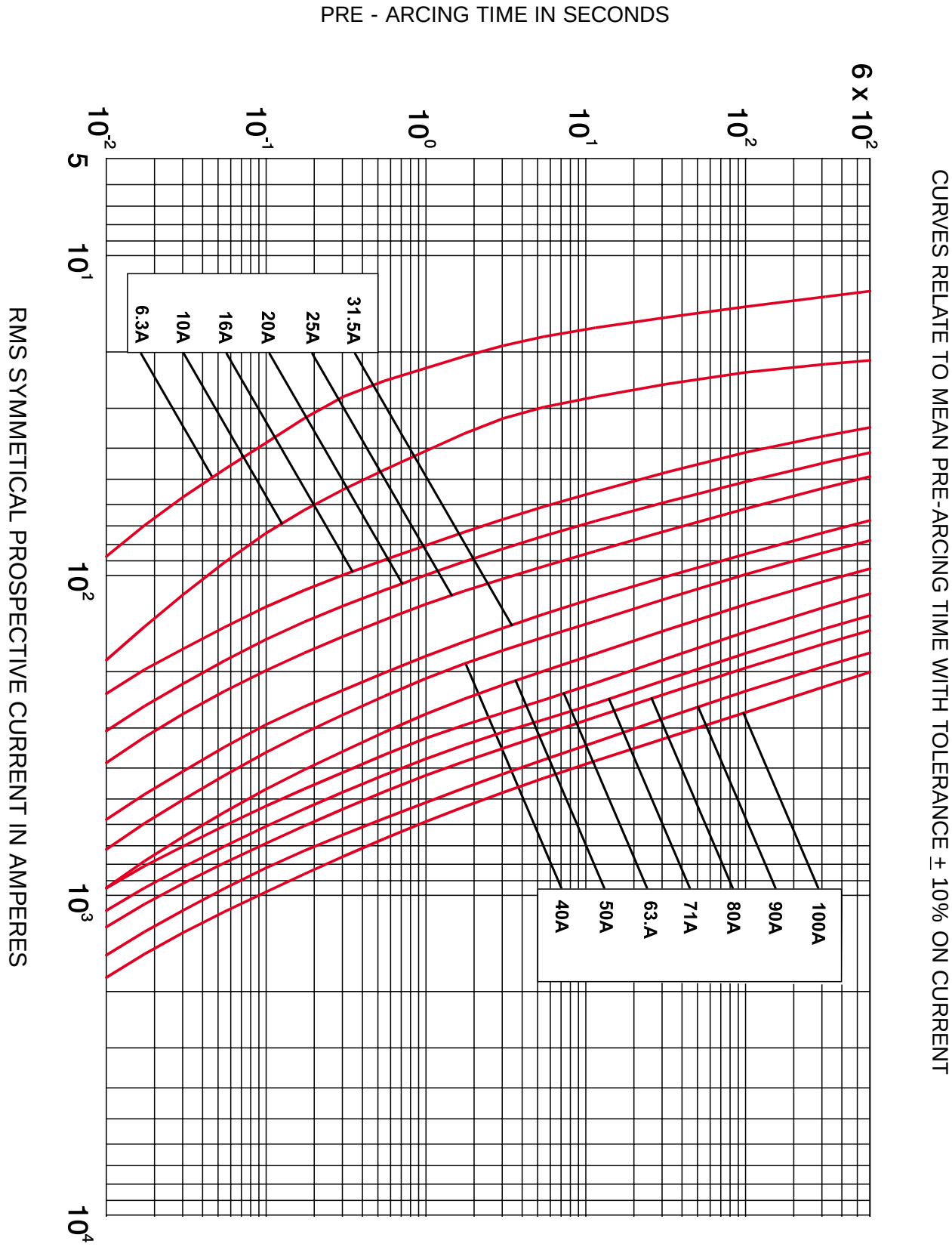

Time current characteristics for 17.5kV Oil Fuse Links, fuse type OHG

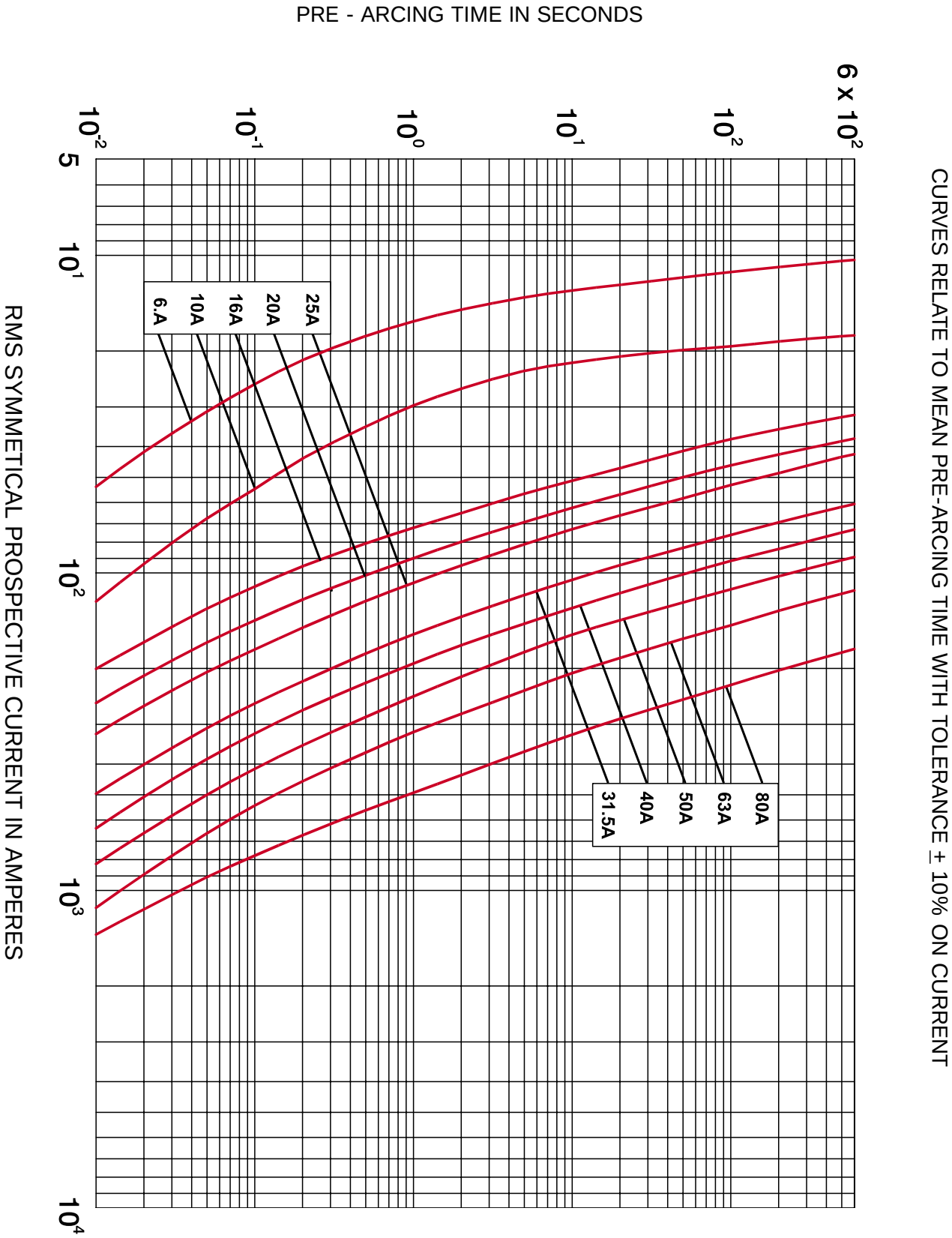

Time current characteristics for 24kV Oil Fuse Links, fuse type OEG

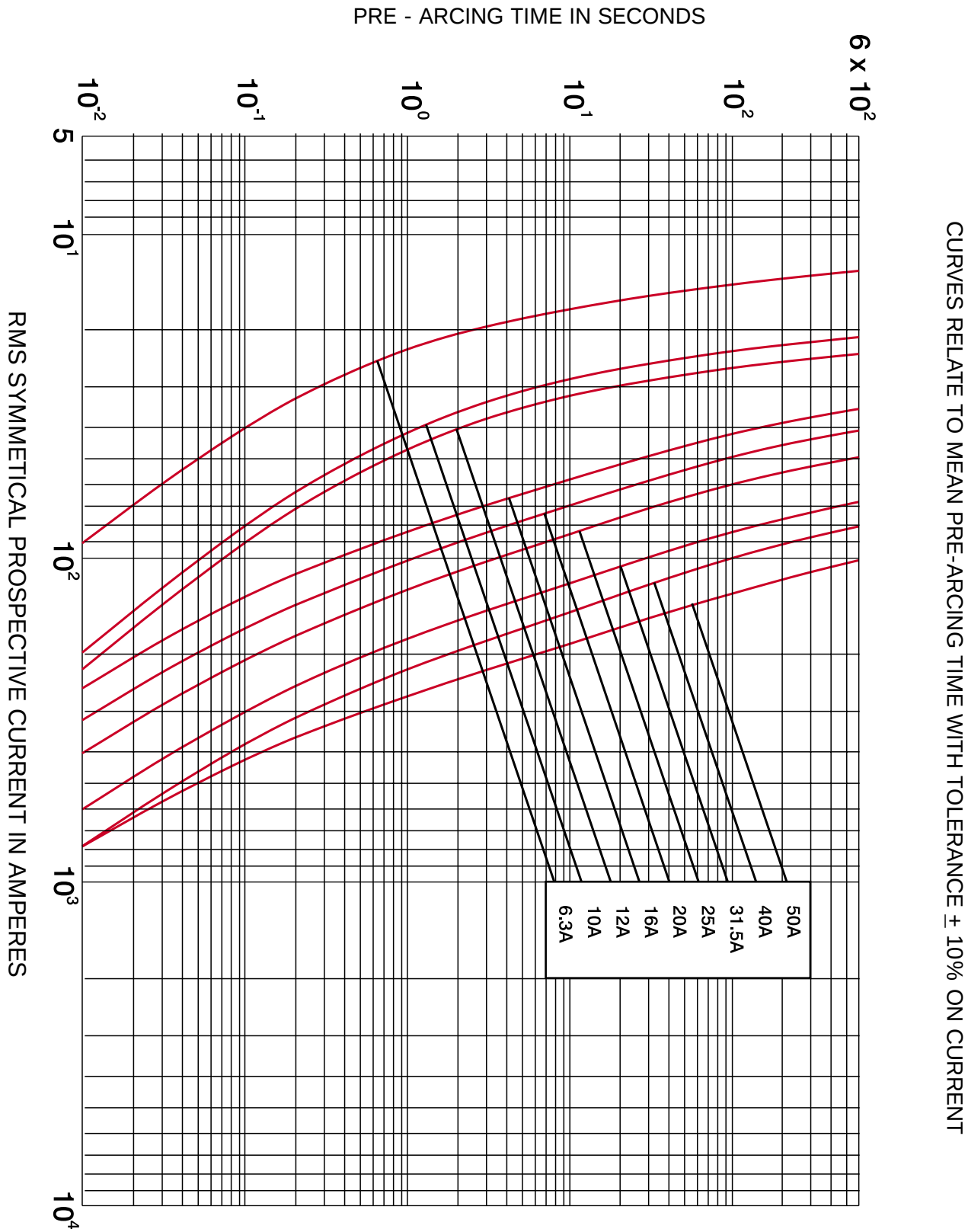

- **High Voltage fuse links for use in Air, comply with BS 2962-1 dimensions.**
- **Available in voltage ranges 3.6 to 72.5kV.**
- **Full range performance option available at 12kV and 24kV.**
- **Wide variety of fixing arrangements available.**
- **Powerful pyrotechnic striker fitted.**
- **E-rated North American dimension products also available.**
- **Suitable for indoor or outdoor use.**

British Standard Range

Bussmann Fuse Links for use in air

The Bussmann range of fuse links for use in air are available in British Standard form, BS 2692, Part 1 1975. A number of options are available, including **full range capability**, and alternative fixing arrangements such as different types of tag, studs and collars etc. Details are available on application. Higher current ratings can be obtained by using fuse links in parallel and special fixing arrangements are available for this purpose.

Bussmann Air Range - USA Dimensions

A comprehensive range of 'E' rated North American Dimension fuse links for industrial applications is also available. These are the latest technology **full range fuse links** in USA Industrial Standard 2 inch and 3 inch diameter ferrule style. Extended ratings in double barrel assemblies; striker, indicator and tag versions are also available.

Table of ratings for British Standard air fuses 3.6 - 72.5kV

Part Number *	Voltage Rating	Current Rating	Breaking Capacity	Cold resistance in free air at rated current	Joule Intergral (I^2t)		Length	Diameter Ø	Weight
	U_n	I_n	I_1		A^2s				
	kV	A	kA	m Ω	Minimum Pre-Arcing	Maximum Total Clearing	mm	mm	kg
3.6ADFH*6.3	3.6	6.3	40	208	$4.8x10^1$	$7.2x10^2$	254	50.8	1.5
3.6ADFH*10	3.6	10	40	91.8	$2.3x10^2$	$2.3x10^3$	254	50.8	1.5
3.6ADFH*16	3.6	16	40	31.1	$7.2x10^1$	$1.0x10^3$	254	50.8	1.5
3.6ADFH*20	3.6	20	40	24.9	$1.1x10^2$	$1.5x10^3$	254	50.8	1.5
3.6ADFH*25	3.6	25	40	18.6	$2.0x10^2$	$2.1x10^3$	254	50.8	1.5
3.6ADFH*31.5	3.6	31.5	40	14.9	$3.1x10^2$	$2.8x10^3$	254	50.8	1.5
3.6ADFH*40	3.6	40	40	10.0	$7.1x10^2$	$7.7x10^3$	254	50.8	1.5
3.6ADGH*6.3	3.6	6.3	25	185	$4.8x10^1$	$7.2x10^2$	359	50.8	2.1
3.6ADGH*10	3.6	10	25	77.1	$3.1x10^2$	$4.7x10^3$	359	50.8	2.1
3.6ADGH*16	3.6	16	25	58.6	$5.5x10^2$	$8.3x10^3$	359	50.8	2.1
3.6ADGH*20	3.6	20	25	44.0	$9.8x10^2$	$1.5x10^4$	359	50.8	2.1
3.6ADGH*25	3.6	25	25	36.9	$1.3x10^2$	$1.5x10^3$	359	50.8	2.1
3.6ADGH*31.5	3.6	31.5	25	24.6	$2.9x10^2$	$3.5x10^3$	359	50.8	2.1
3.6ADGH*40	3.6	40	25	13.9	$8.0x10^2$	$9.6x10^3$	359	50.8	2.1
3.6ADGH*50	3.6	50	25	9.91	$1.6x10^3$	$1.9x10^4$	359	50.8	2.1
3.6ADGH*63	3.6	63	25	7.05	$3.1x10^3$	$3.7x10^4$	359	50.8	2.1
3.6ADGH*80	3.6	80	25	4.94	$6.3x10^3$	$7.6x10^4$	359	50.8	2.1
3.6ADGH*100	3.6	100	25	3.96	$9.8x10^3$	$1.2x10^5$	359	50.8	2.1
7.2ADFH*6.3	7.2	6.3	20	206	$4.8x10^1$	$5.6x10^2$	254	50.8	1.5
7.2ADFH*10	7.2	10	20	83.0	$7.2x10^1$	$9.4x10^2$	254	50.8	1.5
7.2ADFH*16	7.2	16	20	52.3	$7.2x10^1$	$8.6x10^2$	254	50.8	1.5
7.2ADFH*20	7.2	20	20	41.8	$1.1x10^2$	$1.5x10^3$	254	50.8	1.5
7.2ADFH*25	7.2	25	20	31.5	$2.0x10^2$	$2.6x10^3$	254	50.8	1.5
7.2ADFH*31.5	7.2	31.5	20	22.8	$3.8x10^2$	$4.8x10^3$	254	50.8	1.5
7.2ADFH*40	7.2	40	20	15.6	$8.0x10^2$	$1.1x10^4$	254	50.8	1.5
7.2ADFH*50	7.2	50	20	11.8	$1.3x10^3$	$1.4x10^4$	254	50.8	1.5
7.2ADFH*63	7.2	63	20	8.41	$2.5x10^3$	$2.9x10^4$	254	50.8	1.5
7.2AFFH*80	7.2	80	20	5.83	$6.3x10^3$	$6.9x10^4$	254	76.2	2.8
7.2AFFH*100	7.2	100	20	4.38	$9.8x10^3$	$1.4x10^5$	254	76.2	2.8
7.2BDGH*6.3	7.2	6.3	40	206	$5.1x10^1$	$6.0x10^2$	359	50.8	2.1
7.2BDGH*10	7.2	10	40	83.0	$1.0x10^2$	$1.3x10^3$	359	50.8	2.1
7.2BDGH*16	7.2	16	40	52.3	$8.4x10^1$	$1.0x10^3$	359	50.8	2.1
7.2BDGH*20	7.2	20	40	41.8	$1.1x10^2$	$1.5x10^3$	359	50.8	2.1
7.2BDGH*25	7.2	25	40	31.4	$2.0x10^2$	$2.6x10^3$	359	50.8	2.1
7.2BDGH*31.5	7.2	31.5	40	22.8	$4.6x10^2$	$5.8x10^3$	359	50.8	2.1
7.2BDGH*40	7.2	40	40	15.7	$8.0x10^2$	$1.1x10^4$	359	50.8	2.1
7.2BDGH*50	7.2	50	40	11.8	$1.6x10^3$	$1.8x10^4$	359	50.8	2.1
7.2BDGH*63	7.2	63	40	7.48	$3.6x10^3$	$4.3x10^4$	359	50.8	2.1
7.2BDGH*80	7.2	80	40	5.82	$6.4x10^3$	$7.0x10^4$	359	50.8	2.1
7.2BFGH*90	7.2	90	40	4.72	$1.0x10^4$	$1.4x10^5$	359	76.2	4.2
7.2BFGH*100	7.2	100	40	4.05	$1.3x10^4$	$1.9x10^5$	359	76.2	4.2
7.2BFGH*125	7.2	125	40	3.15	$1.6x10^4$	$1.9x10^5$	359	76.2	4.2
7.2BFGH*140	7.2	140	40	2.57	$2.4x10^4$	$3.3x10^5$	359	76.2	4.2
7.2BFGH*160	7.2	160	40	2.35	$2.9x10^4$	$4.0x10^5$	359	76.2	4.2
12ADFH*6.3	12	6.3	12	356	$4.8x10^1$	$5.0x10^2$	254	50.8	1.5
12ADFH*10	12	10	12	89.8	$1.3x10^2$	$2.0x10^3$	254	50.8	1.5
12ADFH*16	12	16	12	56.5	$1.3x10^2$	$2.0x10^3$	254	50.8	1.5
12ADFH*20	12	20	12	36.2	$3.1x10^2$	$3.5x10^3$	254	50.8	1.5
12ADFH*25	12	25	12	28.3	$5.1x10^2$	$6.1x10^3$	254	50.8	1.5
12ADFH*31.5	12	31.5	12	22.6	$8.0x10^2$	$9.0x10^3$	254	50.8	1.5
12AFFH*40	12	40	12	21.8	$1.2x10^3$	$1.5x10^4$	254	76.2	2.8
12AFFH*50	12	50	12	15.7	$2.0x10^3$	$2.5x10^4$	254	76.2	2.8
12AFFH*63	12	63	12	12.5	$3.1x10^3$	$3.9x10^4$	254	76.2	2.8
12BDGH*6.3	12	6.3	40	356	$5.2x10^1$	$5.0x10^2$	359	50.8	2.1
12BDGH*10	12	10	40	138	$6.4x10^1$	$1.0x10^3$	359	50.8	2.1
12BDGH*16	12	16	40	87.0	$6.4x10^1$	$1.0x10^3$	359	50.8	2.1
12BDGH*20	12	20	40	63.3	$1.6x10^2$	$1.8x10^3$	359	50.8	2.1
12BDGH*22.4	12	22.4	40	49.7	$2.4x10^2$	$3.0x10^3$	359	50.8	2.1
12BDGH*25	12	25	40	43.5	$3.2x10^2$	$3.8x10^3$	359	50.8	2.1
12BDGH*31.5	12	31.5	40	32.6	$5.8x10^2$	$6.5x10^3$	359	50.8	2.1
12BDGH*35.5	12	35.5	40	24.5	$9.0x10^2$	$1.1x10^4$	359	50.8	2.1
12BDGH*40	12	40	40	21.8	$1.2x10^3$	$1.5x10^4$	359	50.8	2.1
12BDGH*45	12	45	40	17.5	$1.8x10^3$	$2.3x10^4$	359	50.8	2.1
12BDGH*50	12	50	40	14.5	$2.5x10^3$	$3.2x10^4$	359	50.8	2.1
12BFGH*56	12	56	40	14.6	$2.9x10^3$	$3.7x10^4$	359	76.2	4.2
12BFGH*63	12	63	40	12.8	$3.4x10^3$	$4.5x10^4$	359	76.2	4.2
12BFGH*71	12	71	40	10.6	$4.6x10^3$	$6.3x10^4$	359	76.2	4.2
12BFGH*80	12	80	40	9.73	$6.1x10^3$	$7.8x10^4$	359	76.2	4.2
12BFGH*90	12	90	40	8.37	$8.1x10^3$	$1.0x10^5$	359	76.2	4.2
12BFGH*100	12	100	40	6.88	$1.1x10^3$	$1.4x10^5$	359	76.2	4.2
12AKGH*112	12	112	20	5.25	$1.5x10^4$	$1.9x10^5$	359	76.2	4.3
12AKGH*125	12	125	20	4.92	$2.1x10^4$	$2.4x10^5$	359	76.2	4.3

*The last letter of the ordering code on these items describes the tag required, please refer to *"How to order"* (page 61) for an explanation.

Table of ratings for British Standard air fuses 3.6 - 72.5kV

Part Number	Voltage Rating	Current Rating	Breaking Capacity	Cold resistance in free air at rated current	Joule Intergral (I^2t)		Length	Diameter Ø	Weight
	U_n	I_n	I_1		A^2s				
	kV	A	kA	m Ω	Minimum Pre-Arcing	Maximum Total Clearing	mm	mm	kg
Fullrange	12	10	40	90.6	$2.7x10^2$	$4.7x10^3$	359	76.2	4.1
12FFGN4910	12	16	40	69.1	$4.2x10^2$	$6.1x10^3$	359	76.2	4.1
12FFGN4916	12	20	40	45.6	$9.5x10^2$	$1.1x10^4$	359	76.2	4.1
12FFGN4920	12	25	40	36.5	$1.6x10^3$	$1.5x10^4$	359	76.2	4.1
12FFGN4925	12	31.5	40	25.4	$3.1x10^3$	$2.5x10^4$	359	76.2	4.1
12FFGN4931.5	12	40	40	19.7	$4.7x10^3$	$3.8x10^4$	359	76.2	4.1
12FFGN4940	12	50	40	14.7	$8.4x10^3$	$5.6x10^4$	359	76.2	4.1
12FFGN4950	12	63	40	12.6	$6.3x10^3$	$5.4x10^4$	359	76.2	4.1
12FFGN4963							359	76.2	4.1
15.5BDGH*6.3	15.5	6.3	20	485	$4.8x10^1$	$8.5x10^2$	359	50.8	2.1
15.5BDGH*10	15.5	10	20	158	$7.2x10^1$	$1.2x10^3$	359	50.8	2.1
15.5BDGH*16	15.5	16	20	99.1	$7.2x10^1$	$1.2x10^3$	359	50.8	2.1
15.5BDGH*20	15.5	20	20	74.6	$1.3x10^2$	$2.8x10^3$	359	50.8	2.1
15.5BDGH*25	15.5	25	20	54.2	$2.4x10^2$	$4.3x10^3$	359	50.8	2.1
15.5BDGH*31.5	15.5	31.5	20	38.2	$4.9x10^2$	$7.0x10^3$	359	50.8	2.1
15.5BDGH*40	15.5	40	20	27.2	$9.6x10^2$	$1.2x10^4$	359	50.8	2.1
15.5BFGH*50	15.5	50	20	22.2	$1.6x10^3$	$3.2x10^4$	359	76.2	4.2
15.5BFGH*63	15.5	63	20	15.5	$3.2x10^3$	$4.6x10^4$	359	76.2	4.2
15.5BFGH*80	15.5	80	20	9.73	$7.2x10^3$	$1.0x10^5$	359	76.2	4.2
15.5BFGH*85	15.5	85	20	9.45	$7.2x10^3$	$1.0x10^5$	359	76.2	4.2
24ADIHA6.3	15.5	6.3	12	520	$7.9x10^1$	$8.5x10^2$	565	50.8	3.0
24ADIHA10	15.5	10	12	173	$7.2x10^1$	$1.1x10^2$	565	50.8	3.0
24ADIHA16	15.5	16	12	129	$1.3x10^2$	$1.7x10^3$	565	50.8	3.0
24ADIHA20	15.5	20	12	104	$2.0x10^2$	$2.8x10^3$	565	50.8	3.0
24ADIHA25	15.5	25	12	82.7	$3.1x10^2$	$4.1x10^3$	565	50.8	3.0
24ADIHA31.5	15.5	31.5	12	66.2	$4.9x10^2$	$6.8x10^3$	565	50.8	3.0
24AFIHA40	24	40	16	46.5	$1.2x10^3$	$1.1x10^4$	565	76.2	6.1
24AFIHA50	24	50	16	33.2	$2.4x10^3$	$2.2x10^4$	565	76.2	6.1
24AFIHA63	24	63	16	23.5	$3.2x10^3$	$5.2x10^4$	565	76.2	6.1
24AFIHA80	24	80	16	17.9	$5.5x10^3$	$8.2x10^4$	565	76.2	6.1
24AFIHA90	24	90	16	14.7	$7.2x10^3$	$1.0x10^5$	565	76.2	6.1
Fullrange									
24FDIHA3.15	24	3.15	35.5	893	$3.1x10^1$	$9.8x10^1$	565	50.8	3.0
24FDIHA5	24	5	35.5	412	$5.9x10^1$	$4.5x10^2$	565	50.8	3.0
24FDIHA6.3	24	6.3	35.5	412	$5.9x10^1$	$4.5x10^2$	565	50.8	3.0
24FDIHA10	24	10	35.5	205	$2.7x10^2$	$2.1x10^3$	565	50.8	3.0
24FDIHA16	24	16	35.5	103	$1.1x10^3$	$8.3x10^3$	565	50.8	3.0
24FDIHA20	24	20	35.5	88.2	$1.3x10^3$	$4.8x10^3$	565	50.8	3.0
24FDIHA31.5	24	31.5	35.5	56.0	$5.3x10^3$	$2.0x10^4$	565	50.8	3.0
36ADIHA3.15	36	3.15	16	1460	$2.0x10^1$	$2.5x10^2$	565	50.8	3.0
36ADIHA5	36	5	16	973	$4.4x10^1$	$5.5x10^2$	565	50.8	3.0
36ADIHA6.3	36	6.3	16	781	$7.1x10^1$	$8.9x10^2$	565	50.8	3.0
36ADIHA10	36	10	16	378	$7.2x10^1$	$1.1x10^3$	565	50.8	3.0
36ADIHA16	36	16	16	190	$1.1x10^2$	$1.7x10^3$	565	50.8	3.0
36ADIHA20	36	20	16	142	$2.0x10^2$	$2.8x10^3$	565	50.8	3.0
36ADIHA25	36	25	16	115	$3.1x10^2$	$4.5x10^3$	565	50.8	3.0
36ADIHA31.5	36	31.5	16	81.5	$6.1x10^2$	$8.1x10^3$	565	50.8	3.0
36AFIHA40	36	40	25	61.5	$1.2x10^3$	$1.9x10^4$	565	76.2	6.1
36AFKHA50	36	50	25	54.5	$1.9x10^3$	$2.8x10^4$	914	76.2	9.7
36AFKHA63	36	63	25	40.6	$3.5x10^3$	$5.0x10^4$	914	76.2	9.7
36AFKHA71	36	71	25	32.5	$5.5x10^3$	$8.2x10^4$	914	76.2	9.7
72.5AFKHA3.15	72.5	3.15	12	4230	$1.4x10^1$	$1.8x10^2$	914	76.2	9.7
72.5AFKHA5	72.5	5	12	1600	$1.1x10^2$	$1.4x10^3$	914	76.2	9.7
72.5AFKHA6.3	72.5	6.3	12	1200	$1.9x10^2$	$2.5x10^3$	914	76.2	9.7
72.5AFKHA10	72.5	10	12	519	$7.2x10^1$	$9.3x10^2$	914	76.2	9.7
72.5AFKHA16	72.5	16	12	389	$1.3x10^2$	$1.7x10^3$	914	76.2	9.7
72.5AFKHA20	72.5	20	12	249	$3.1x10^2$	$4.0x10^3$	914	76.2	9.7
72.5AFKHA25	72.5	25	12	195	$5.1x10^2$	$6.6x10^3$	914	76.2	9.7
72.5AFKHA31.5	72.5	31.5	12	130	$1.0x10^3$	$1.3x10^4$	914	76.2	9.7
72.5AFKHA40	72.5	40	12	92.7	$2.0x10^3$	$2.6x10^4$	914	76.2	9.7

Notes

a) The fifth letter or number of the part reference denotes the end fixing arrangement.

b) There are a wide variety of end terminations available, the most popular types, some of which have dimensional references to BS2692: Part 1, are:

A No Tags - Ferrule - BS Ref. FA3 - ADIHA / BS Ref. FA4 - AFIHA / BS Ref. FA5 - AFKHA

B Offset Tag, single bolt fixing

C & D Special Offset Tags, two hole fixings for Brush fuse switch equipment, BS Ref. TA3.

F & O Offset Tags two bolt fixing.

49 Centre Tags, single bolt fixing for use in Fused End Boxes.

6 Tags to BS2692-1 ref. TA3

General guide to the selection of Air Fuse Links for use in the primary circuit of three phase transformers

Transformer kVA	Transformer Priority Voltage								
	6.6kV			11kV			13.8kV		
	Fuse Type	Current Rating (A)	Rating kV	Fuse Type	Current Rating (A)	Rating kV	Fuse Type	Current Rating (A)	Rating kV
200	BDG	31.5	12	BDG	20	12	BDG	20	15.5
250	BDG	40	12	BDG	25	12	BDG	25	15.5
300/315	BDG	50	12	BDG	31.5	12	BDG	31.5	15.5
400	BFG	63	12	BDG	40	12	BDG	40	15.5
500	BFG	80	12	BDG	50	12	BFG	50	15.5
630	BFG	90	12	BFG	63	12	BFG	63	15.5
750/800	BFG	125	7.2	BFG	71	12	BFG	63	15.5
1000	BFG	140	7.2	BFG	90	12	BFG	85	15.5
1250	BFG	160	7.2	AKG	112	12	BFG	85[3]	15.5
1500	BFG	160[3]	7.2	AKG	125[3]	12	-	-	-

Selection of these fuse links has been based on a compromise between the following:

1 The fuse links should withstand transformer magnetising inrush currents, taken as 12 times full load current for 0.1 seconds.

2 The fuse links should discriminate with the highest rating of secondary fuse link.

3 The fuse links should withstand periodic over-currents of up to 150% of transformer full load current.

4 The fuse links should operate reasonably quickly in the event of a transformer inter-turn fault or a fault in the secondary terminal zone of the transformer.

Notes

a) The above recommendations are not generally applicable to transformers feeding motor circuits with starting currents in excess of the rated current of the fuse. In this event, please consult Bussmann.

b) For 6.6kV transformers, 12kV Fuse Links are recommended, where the required current rating is available.

c) Where the transformer is not subjected to periodic over-currents, a lower fuse rating may be suitable, fuse ratings marked thus, '3' are only suitable for use with the transformer sizes quoted, where significant over loading does not occur.

Fuse links for use in transformers with primary voltages of 3.3kV, 22kV and 33kV are available, please consult Bussmann application engineers for further details and a recommendation.

Time current characteristics for 7.2kV Air Fuse Links, fuse types BDG and BFG

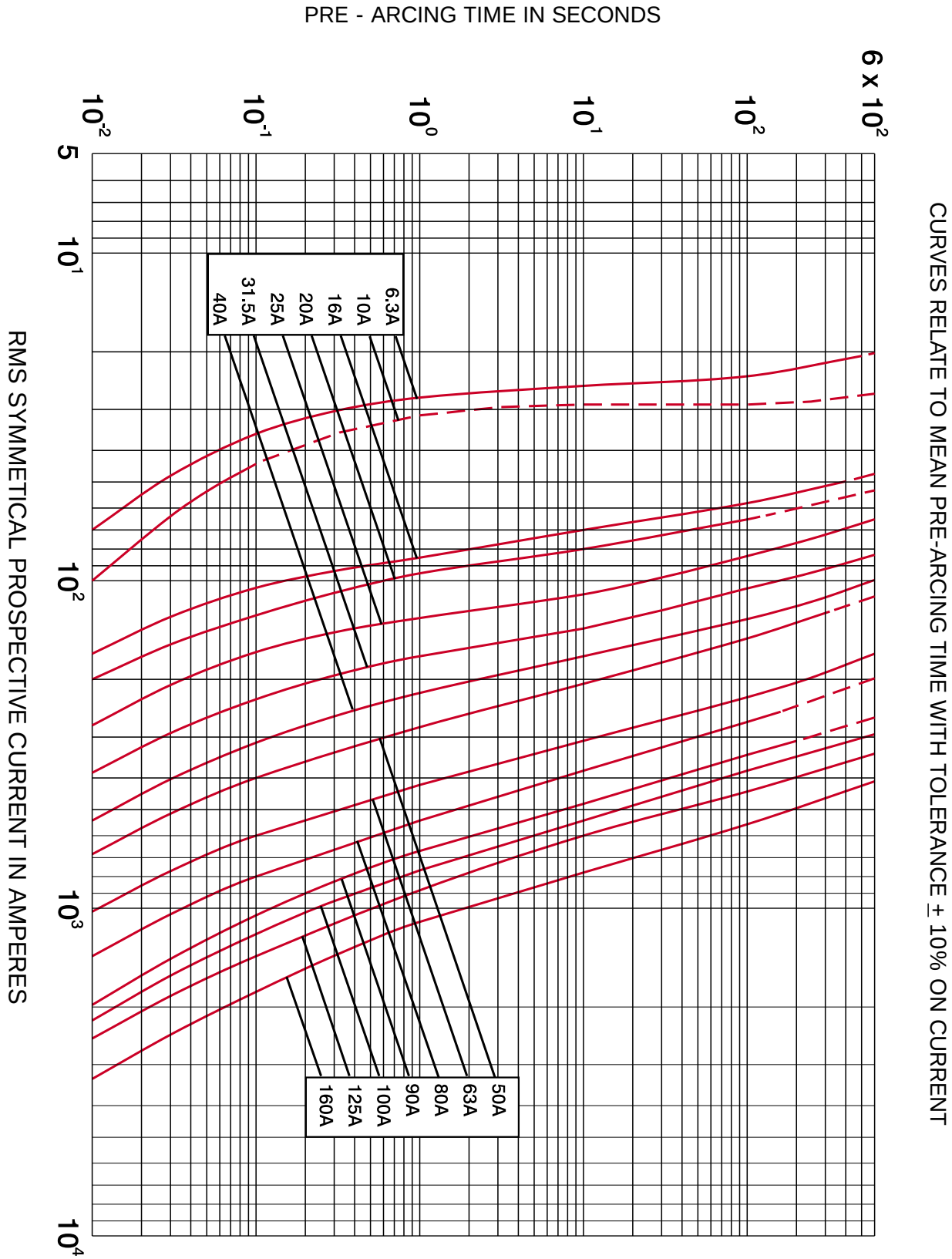

Time current characteristics for 12kV Air Fuse Links, fuse types BDG, BFG and AKG

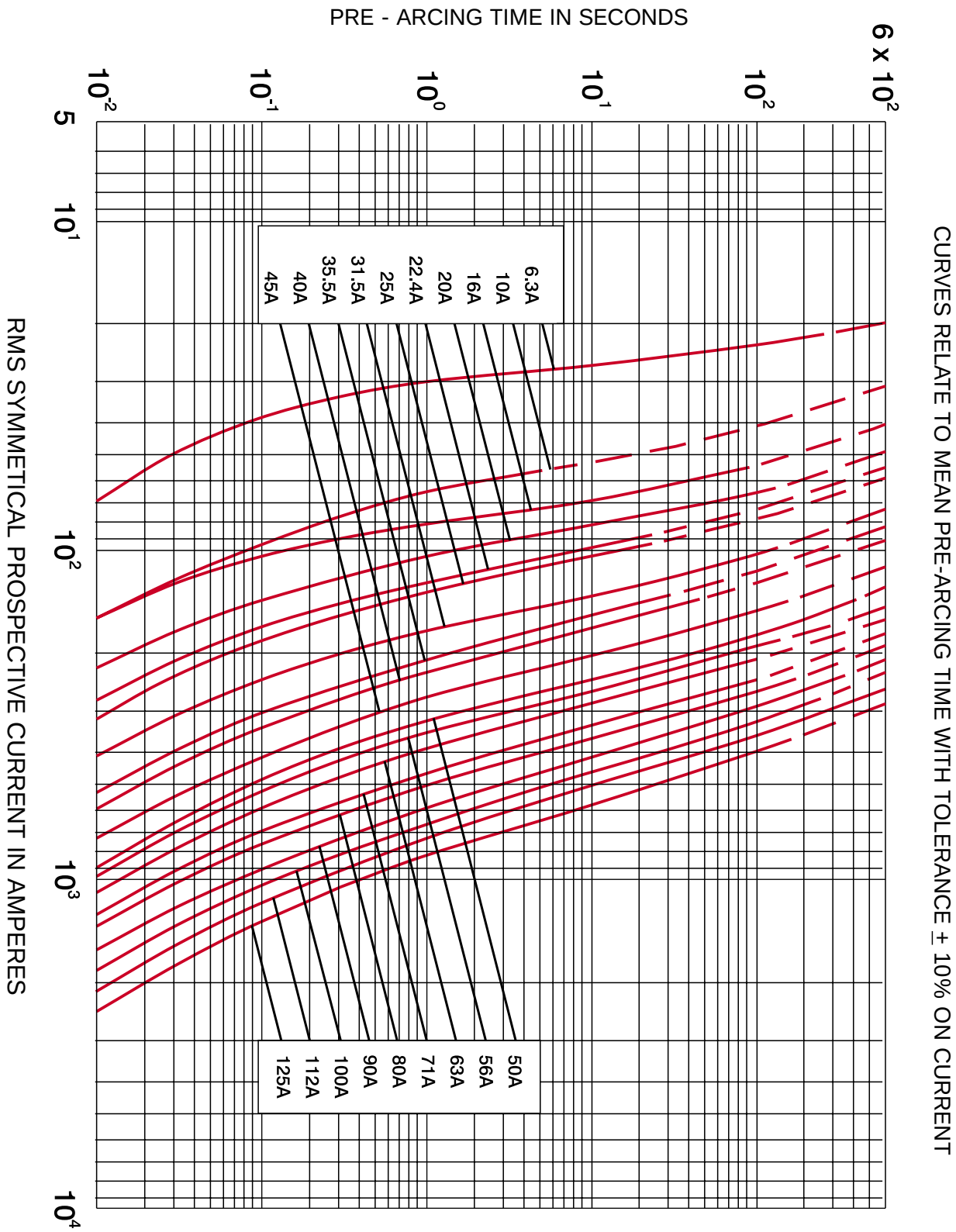

Time current characteristics for 12kV Air Fuse Links, fuse type FFGN

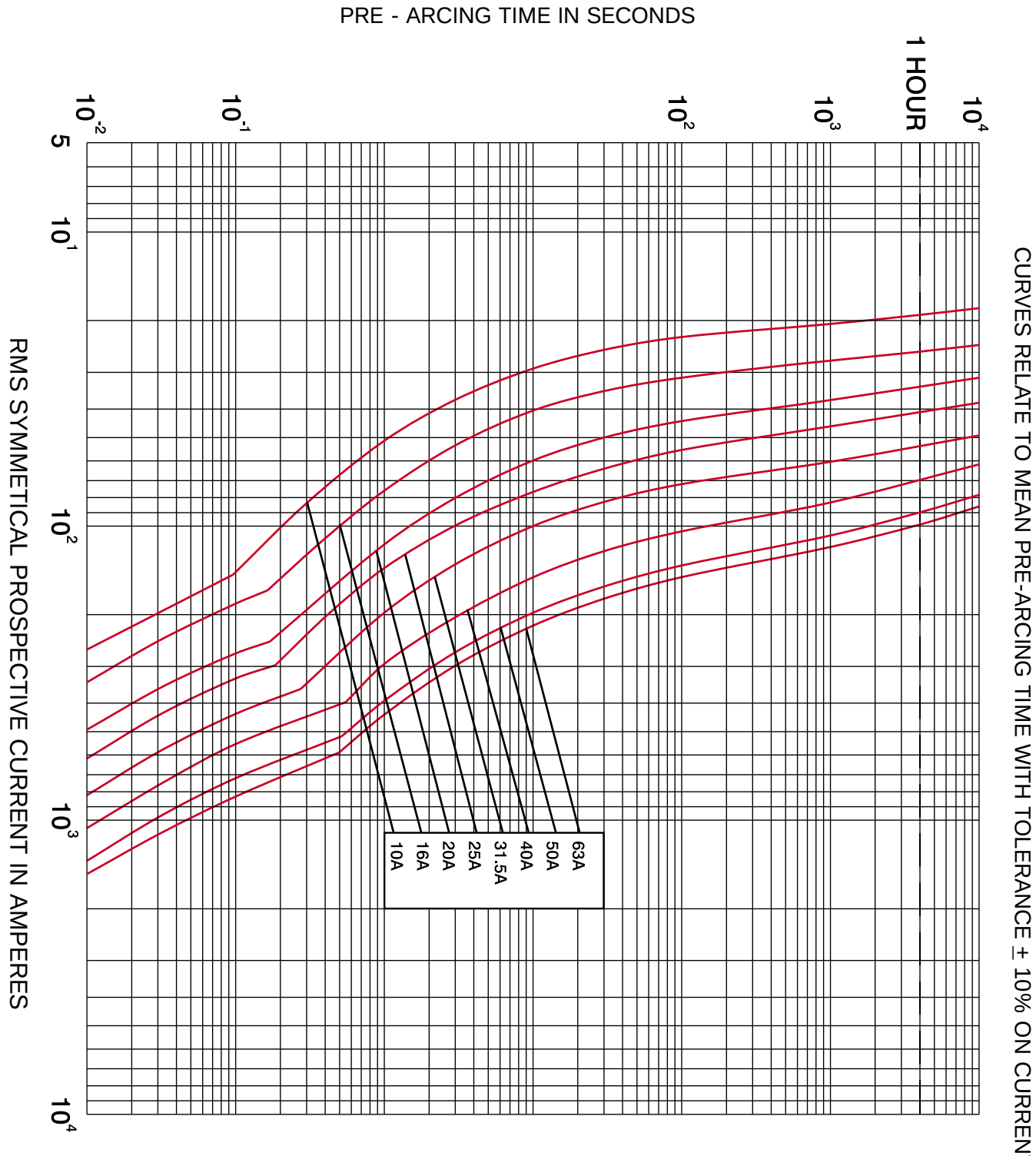

Time current characteristics for 24kV Air Fuse Links, fuse types ADI and AFI

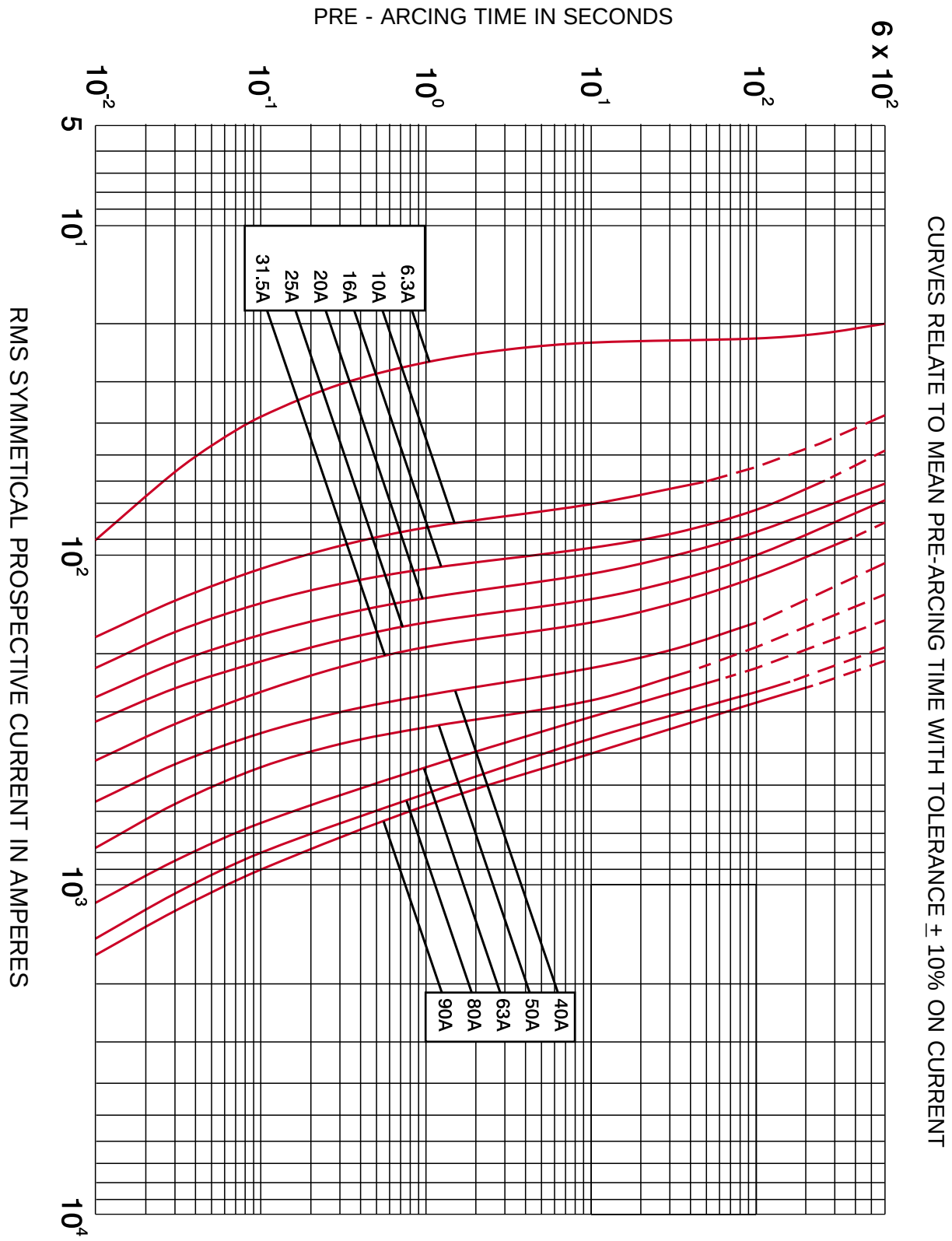

Time current characteristics for 24kV Air Fuse Links, fuse type FDI

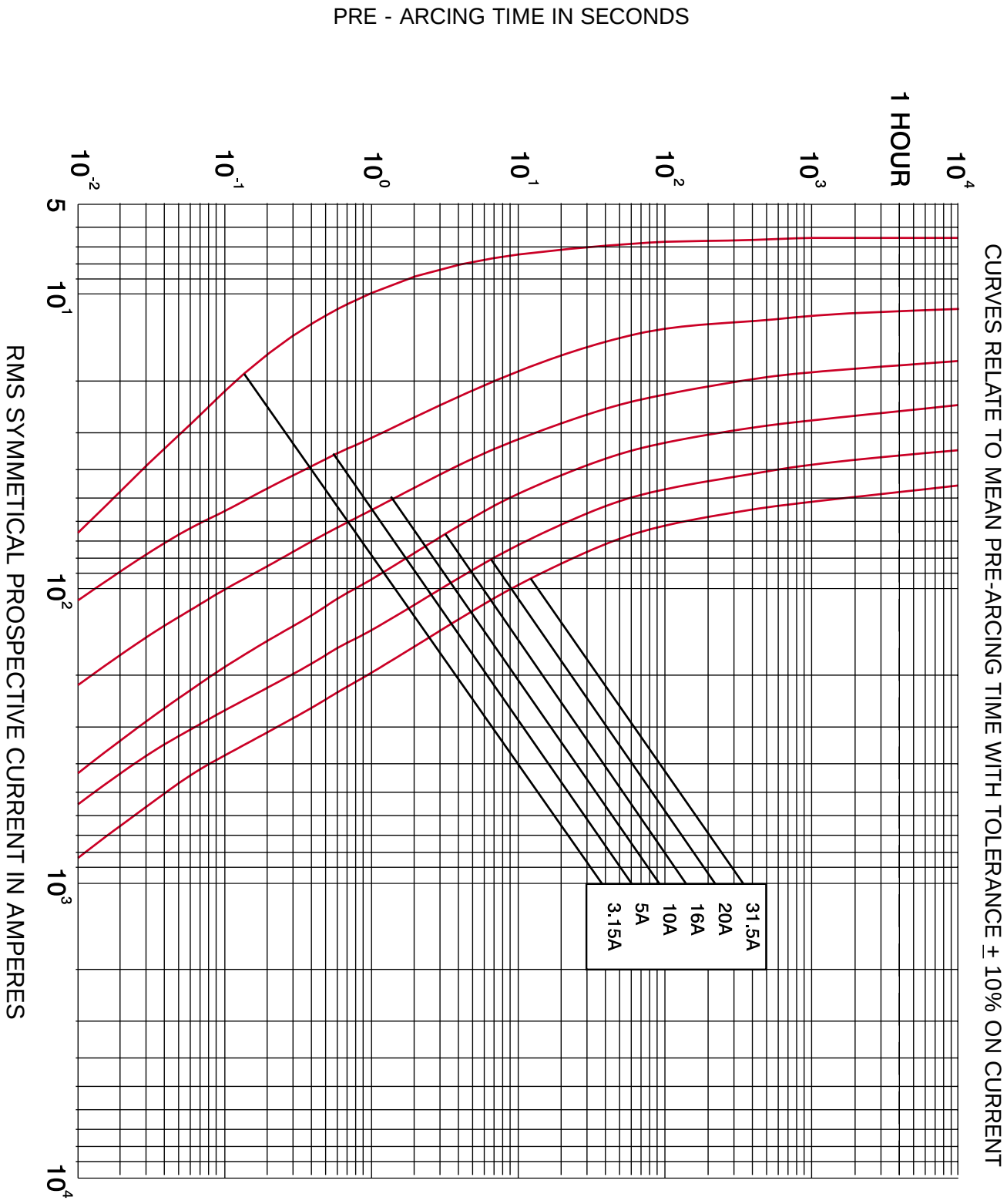

Time current characteristics for 36kV Air Fuse Links, fuse types ADI, AFI and AFK

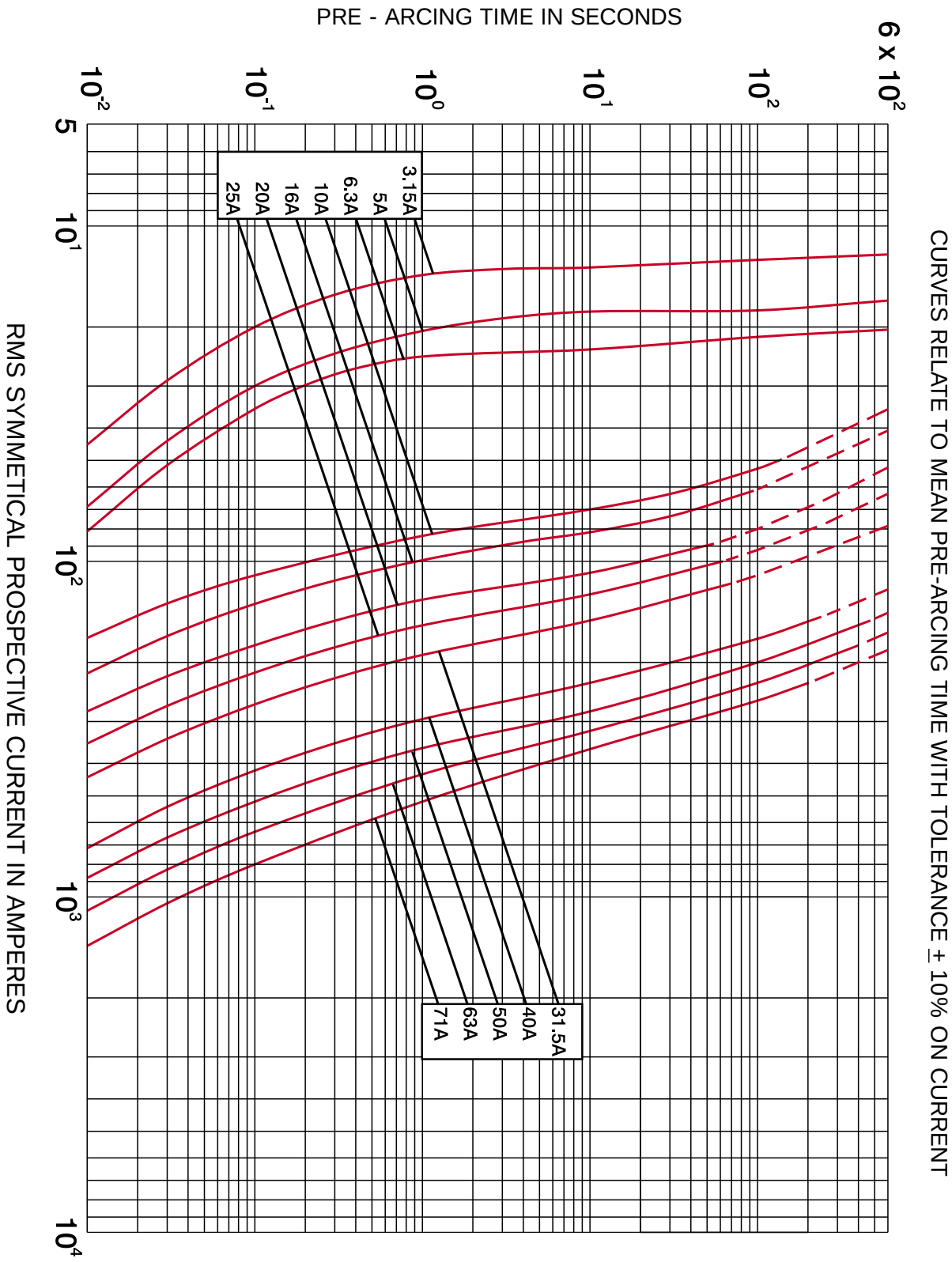

C & D Tags

CODE	A	B	C	DØ
ADFHC	356	314	254	51
ADGHC	461	419	359	51
BDGHC	461	419	359	51
AFFHD	356	314	254	76
AKGHD	461	419	359	76
BFGHD	461	419	359	76

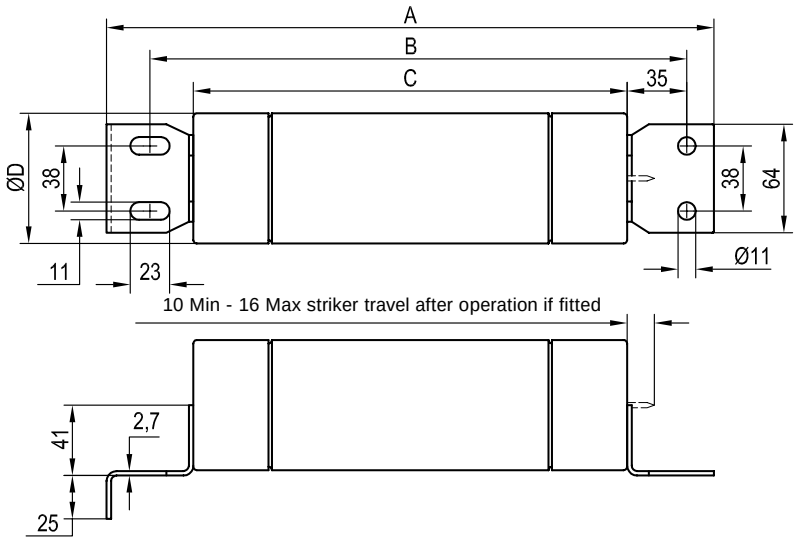

A Tags (ferrule)

CODE	A	DØ
ADGHA	359	51
BDGHA	359	51
ADIHA	565	51
FDIHA	565	51
AKGHA	359	76
BFGHA	359	76
AFIHA	565	76
AKKHA	914	76

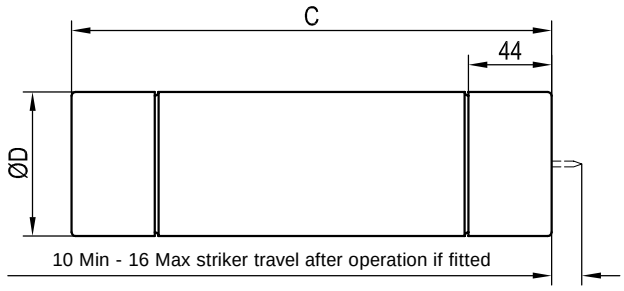

F Tags

CODE	A	B	C	DØ
ADFHF	356	314	254	51
ADGHF	461	419	359	51
BDGHF	461	419	359	51
ADIHF	666	624	565	51
FDIHF	666	624	565	51
AFFHF	356	314	254	76
AKGHF	461	419	359	76
BFGHF	461	419	359	76
AFIHF	666	624	565	76
AFKHF	1016	974	914	76

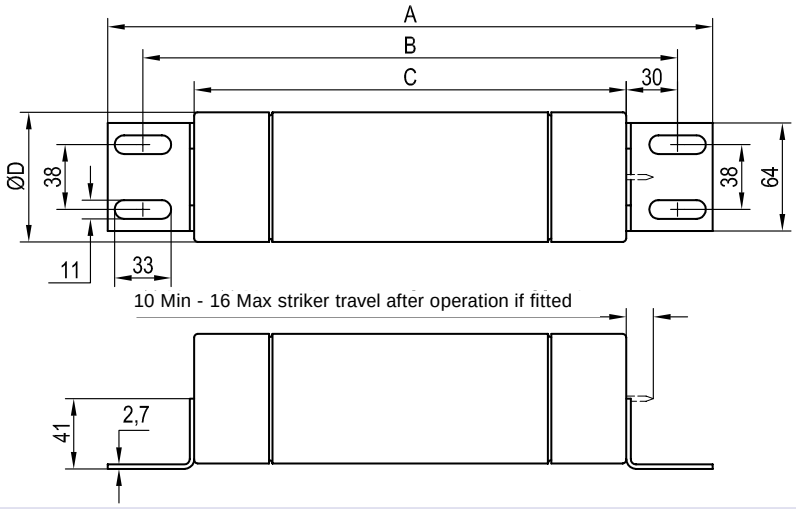

- **Replacement liquid fuse links sizes 1, 2 and 3.**
- **Wide range of voltages 6.6kV up to 75kV.**
- **Current ratings from 2 up to 75 amps (including, 'E' rated option).**
- **Standard and slow blow elements available.**
- **Rewiring kits available for sizes 2 and 3.**
- **Size 1 full range cartridge fuse available type FDSH48.**

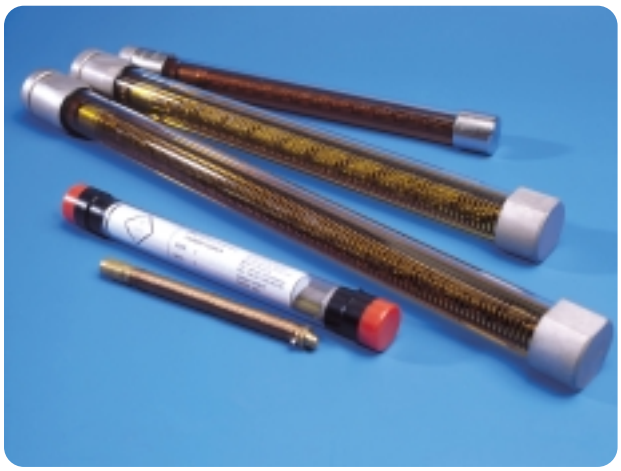

Bussmann Liquid Fuse Links

Bussmann manufacture a range of liquid filled fuse links for use outdoors, on pole mounted equipment. They provide a simple yet effective means of protection in distribution applications. However, it should be noted that liquid filled fuse links were first put into service before HV fuse standards were introduced and are therefore not covered by any present standard. They are principally for replacement purposes on existing systems.

General Description

The fuse body is of clear toughened glass to allow visual identification of a blown fuse element. Plated contact ferrules are hermetically sealed onto each end of the tube. The replacement fuse element assembly is held under tension within the tube, which is filled with fuse arc quenching liquid. (A data sheet on this product is available, please contact Bussmann for details.) The upper end of the fuse link is sealed by a tin diaphragm. This is designed to rupture during operation, permitting venting of arc products.

The fuse link is sealed against the weather and has an indefinite service life, under normal conditions. The element assembly is enclosed by a fibre sleeve. This assists in the process of arc extinguishing during operation.

Operation

When a fuse link operates under fault conditions, the element and connecting strain wire melt, the tension spring then pulls the lower contact and element assembly through the arc quenching liquid to the bottom of the fuse link assembly. A specially shaped liquid director cone, fitted on the assembly, creates a turbulence in the liquid to ensure rapid dispersal of arc products.

Replacement of the Fuse Element

Element replacement kits, complete with instructions, are available from Bussmann. We also advise that a minimum of one replacement kit be purchased with each order.

Note that Size 1 fuse links do not have replaceable elements.

Ordering codes

Symbol					Meaning
Rating Voltage	Liquid Fuse Designation	SIze	Characteristic	Current	
33	-	-	-	-	Fuse is rated at 33kV for use on 33kV systems
-	L	-	-	-	Denotes a Liquid fuse link
-	-	3	-	-	Indicates size
-	-	-	S	-	Indicates characteristics (F = standard; S = slow blow)
-	-	-	-	25	Current rating of the fuse link in Amps

The part number would be 33L3S25 meaning a fuse with a rated voltage of 33kV; L denoting a Liquid type fuse; 3 denoting size; S denoting slow blow and 25 indicating rated current in Amps.

Selection Table

Table of Ratings		
Size	Type	Current Rating (Amps)
1	Standard	2E 3E 5E 7E 10E 20E
2	Standard	3 5 10 15 20 25
2	Slow	5 10 15 20 25
3	Standard	3 5 10 15 20 25 30 40 50 60 75
3	Slow	5 10 15 20 25 30 40 50 60 75

Dimensions

kV	Size	A	B	C	ØD
6.6	3	249	38.1	203	42.8
7.5	1	238	-	203	23.9
11/12	2	338	-	292	30.2
	3	338	38.1	292	42.8
15/23	1	327	-	292	23.9
33	2	427	-	381	30.2
	3	427	38.1	381	42.8
44	3	503	38.1	457	42.8
66	3	655	38.1	609	42.8

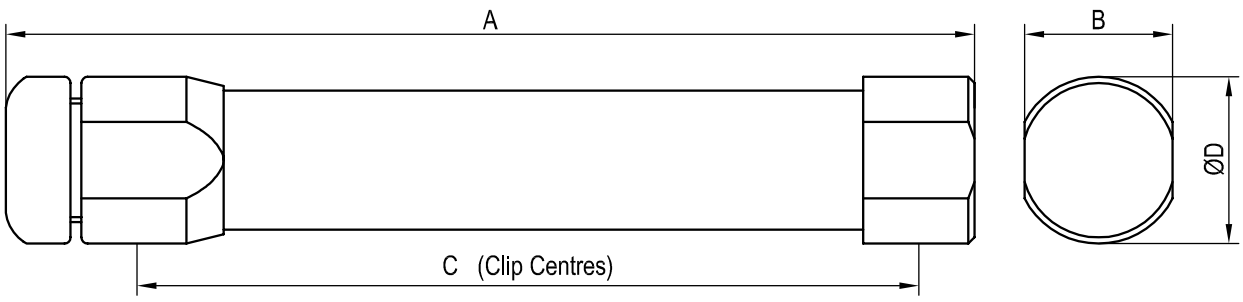

- **VT Fuse Clips for 25.4mm diameter.**
- **DIN Standard Clips for 'F' and, 'S' range fuse links.**
- **BS Mounting Clips suitable for 50.8mm and 76.2mm Oil, Air and Motor Fuse Links up to 200A.**

Bussmann Fuse Clips

To complement the range of tag fixings offered by Bussmann, a range of fuse clips. These are suitable for use with British Standard, DIN dimensioned and VT ferrule style fuse links. The BS and DIN clips are rated up to 200 Amps. They are designed to be fitted onto insulated studs or directly onto a busbar.

Selection Table

Fuse Type	Clip Reference
DIN fuse links to 43 625	270303 or A3354745
Voltage transformer and auxiliary type fuse links	A3354705
British standard fuse links	
50.8mm (2") dia	A3354710
63.5mm (2.5") dia	A3354720
76.2mm (3") dia	A3354730

Clips for 25.4mm VT fuse links

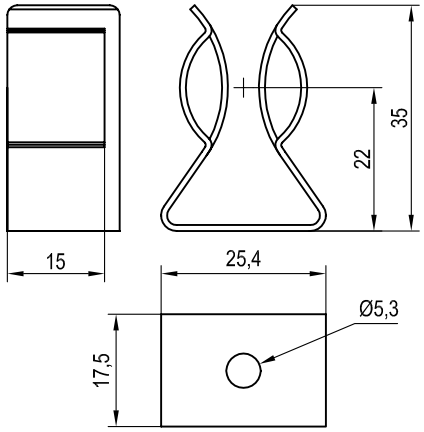

Material: Nickel silver alloy
Order as part number: **A3354705**

Dimensions (mm)

Clips for DIN fuse links

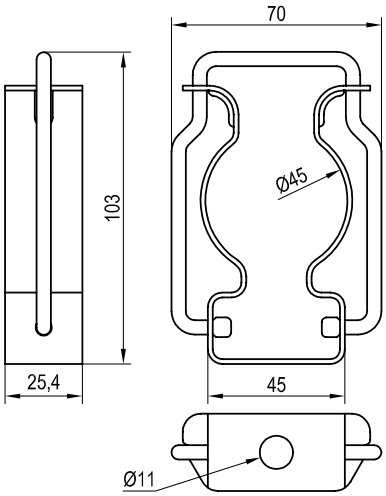

Material: Nickel plated copper
Order as part number: **270303**

Dimensions (mm)

Suitable for use with all Bussmann DIN fuse links. Also suitable for use with other Bussmann fuse links having type, 'J' end tags, to DIN 43 625, with maximum current rating of 200 amps.

Clips for British Standard and DIN style fuse links

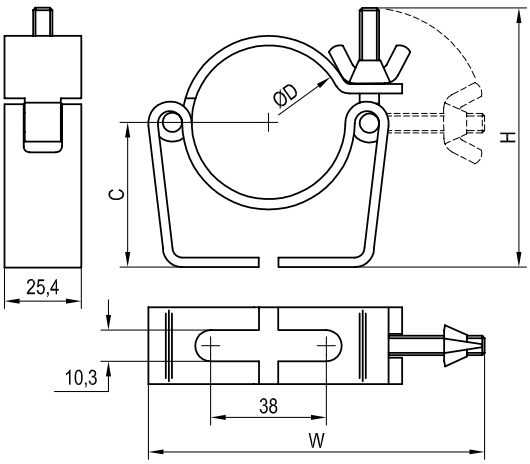

Material: Nickel plated copper
Order as part number:

A3354745 for 45mm dia.
A3354710 for 50.8mm dia.
A3354720 for 63.5 mm dia.
A3354730 for 76.2 mm dia.

Dimensions (mm)

Fuse dia. (D)	H	W	C
45	86	112	48
50.8	86	112	48
63.5	95	124	54
76.2	100	140	58

Introduction

Bussmann employ a common referencing system for all their current limiting HV powder fuses. **Liquid Fuse Links, CAV fuse links, and fuse clips** have their own reference. Please refer to the appropriate section for the applicable code reference.

Part referencing system for current limiting fuse links

kV	1st Letter General Type		2nd Letter Barrel Diameter (mm)	3rd Letter Barrel Length (mm)	4th Letter Striker (mm)	5th/6th letter and or digit - termination or fixing	Amps A
	A / B / D / N	• fuse links for use in air	M = 20,6	U = 86	S = Striker to DIN43625, form C, 50N	A = No Tags. Ferrule diameter as the 2nd letter	
	V or W	• fuse links primarily for use in motor circuits	B = 25,4	W = 142	E= Striker to DIN43625, 80N	B = Offset tag, single bolt fixing	
	F	• fuse links with Full Range characteristics	D = 50,8	O = 192	H or M = Striker to BS2692-1	C and D = Tags to BS2692-1	
	O	• fuse links sealed for use in oil switches	E, H, L = 63,5	C = 195	N = None fitted	F = Offset tag, double bolt fixing	
	S	• DIN Range	F, I, K = 76,2	D = 203		J = Ferrule to DIN 43625	
	T	• DIN Outdoor Range	X = 88	F = 254		O = Tags to BS2692-1	
				L = 292		6 = Tags to BS2692-1	
				G = 359		22 = 5/16-BSW stud one end only	
				N = 403		02/03 double and triple barrel fuse link	
				M = 442		F2/F3 double and triple barrel varients	
				Q = 537			
				I = 565			
				K = 914			

Note:
Most of these fuse types are suitable for outdoor use, refer to Bussmann application engineers for further information.
A variety of alternative tag arrangements are also available, details on request from Bussmann application engineers.

This reference number should be quoted in all correspondence. For example, when ordering or progressing an order or when making a technical enquiry.

Ordering Key

Ordering code information	Type designation						
Rated voltage of the fuse link	12	·	·	·	·	·	·
Type of fuse link	·	B	·	·	·	·	·
Body diameter	·	·	D	·	·	·	·
Body length	·	·	·	G	·	·	·
Type of striker	·	·	·	·	H	·	·
Type of tag	·	·	·	·	·	C	·
Current rating	·	·	·	·	·	·	50
Complete Part Number	12	B	D	G	H	C	50

Part number **12BDGHC50** represents a fuse rated at **12 kV** for use in **Air (B)**, with a body diameter of **50.8mm (D)**, a barrel length of **359mm (G)**, a striker to **BS2692-1 (H)**, a tag arrangement to **BS2692-1 (C)** and an Amp rating of **50A**

Symbol							Meaning
1	2	3	4	5	6	7	
X							Rated voltage of the fuse in kV
	X						The type of fuse link given by a single letter
		X					Diameter of the fuse link barrel in mm denoted by a letter
			X				Length of the fuse link barrel denoted by a letter
				X			Striker information: type of striker (if fitted) denoted by a letter*
					X		Tag information: type, if fitted, denoted by a letter
						X	Current rating of the fuse link given in Amperes

1 > Voltage
2 > Type designation letter
3 > Barrel diameter
4 > Barrel length
5 > Striker information*
6 > Tag information
7 > Rated current

* H or M = Pyrotechnic striker
S = Spring striker 50N
E = Spring striker 80N
N = No striker fitted

Code	ReferenceDescription	Page No.
FFMSJ	DIN 'F' Range (Full range fuse)	3
NBUN*	Voltage and Auxiliary Transformer fuse link	29
OBCN*	Voltage and Auxiliary Transformer fuse link	29
OBFN*	Voltage and Auxiliary Transformer fuse link	29
OBGN*	Voltage and Auxiliary Transformer fuse link	29
OBWN*	Voltage and Auxiliary Transformer fuse link	29
OEFMA	Current Limiting fuse link for use in oil switchgear	36
OEGMA	Current Limiting fuse link for use in oil switchgear	36
OHFMA	Current Limiting fuse link for use in oil switchgear	36
OHGMA	Current Limiting fuse link for use in oil switchgear	36
OLGMA	Current Limiting fuse link for use in oil switchgear	36
SDLSJ	DIN 'S' Range	3
SDMSJ	DIN 'S' Range	3
SDOSJ	DIN 'S' Range	3
SFLSJ	DIN 'S' Range	3
SFMSJ	DIN 'S' Range	3
SFQSJ	DIN 'S' Range	3
SKLSJ	DIN 'S' Range	3
SKMSJ	DIN 'S' Range	3
VFNHA	Motor fuse link - USA dimensions	17
VKNHA	Motor fuse link - USA dimensions	17
VKNHK	Motor fuse link - USA dimensions	17
WDFHO	Motor fuse link - British dimensions	17
WDLSJ	Motor fuse link - DIN Dimensions	17
WDOH6	Motor fuse link - British dimensions	17
WDOSJ	Motor fuse link - DIN Dimensions	17
WFFHO	Motor fuse link - British dimensions	17
WFGHO	Motor fuse link - British dimensions	17
WFLSJ	Motor fuse link - DIN Dimensions	17
WFMSJ	Motor fuse link - DIN Dimensions	17
WFNHO	Motor fuse link - British dimensions	17
WFOH6	Motor fuse link - British dimensions	17
WFOSJ	Motor fuse link - DIN Dimensions	17
WJON6	Motor fuse link - British dimensions	17
WKFHO	Motor fuse link - British dimensions	17
WKGHO	Motor fuse link - British dimensions	17
WKLSJ	Motor fuse link - DIN Dimensions	17

* Tag Variations

WKMSJ	Motor fuse link - DIN Dimensions	17
WKNHO	Motor fuse link - British dimensions	17
2703	Fuse clip for DIN dimension fuse links	59
CAV	Voltage and Auxiliary Transformer fuse link	35
CAVH	Voltage and Auxiliary Transformer fuse link	35
L1, L2, L3, LF	Liquid fuse link (standard blow)	57
L1, L2, L3, LS	Liquid fuse link (slow blow)	57
A3354705	Fuse clip for VT fuse links	59
A3354710	Fuse clip for British Standard and DIN 50.8mm dia	59
A3354720	Fuse clip for British Standard and DIN 63.5mm dia	59
A3354730	Fuse clip for British Standard and DIN 76.2mm	59
A3354745	Fuse clip for British Standard and DIN 45mm dia	59
ABCNA	Voltage and Auxiliary Transformer fuse link, plain ferrule	28
ABCN22	Voltage and Auxiliary Transformer fuse link, BSW 5/18" thread	28
ABFNA	Voltage and Auxiliary Transformer fuse link, plain ferrule	28
ABGNA	Voltage and Auxiliary Transformer fuse link, plain ferrule	28
ABWNA	Voltage and Auxiliary Transformer fuse link, plain ferrule	28
ABWN22	Voltage and Auxiliary Transformer fuse link, BSW 5/18" thread	28
ABWNA	Voltage and Auxiliary Transformer fuse link, US standard	28
ADFH*	Current limiting fuse link for use in air	46
ADGH*	Current limiting fuse link for use in air	46
ADIH*	Current limiting fuse link for use in air	46
ADLSJ	DIN 'A' range	3
ADOSJ	DIN 'A' range	3
AFFH*	Current limiting fuse link for use in air	46
AFIH*	Current limiting fuse link for use in air	46
AFKH*	Current limiting fuse link for use in air	46
AILSJ	DIN 'A' range, with striker	3
AIMSJ	DIN 'A' range, with striker	3
AKGH*	Current limiting fuse link for use in air	46
AMWNA	Voltage and Auxiliary Transformer fuse link, US standard	46
BDGH*	Currrent limiting fuse link for use in air	46
BFGH*	Current limiting fuse link for use in air	46
FDIH*	Current limiting fuse link for use in air (full range)	46
FDLSJ	DIN 'F' Range (Full range fuse)	3
FDMSJ	DIN 'F' Range (Full range fuse)	3
FFGN49	Current limiting fuse link for use in air (full range)	46
FFLSJ	DIN 'F' Range (Full range fuse)	3
FXLSJ	DIN 'F' Range (Full range fuse)	3

* Tag Variations

Общество с ограниченной ответственностью «МосЧип» ИНН 7719860671 / КПП 771901001
Адрес: 105318, г.Москва, ул.Щербаковская д.3, офис 1107

Данный компонент на территории Российской Федерации

Вы можете приобрести в компании MosChip.

Для оперативного оформления запроса Вам необходимо перейти по данной ссылке:

http://moschip.ru/get-element

Вы можете разместить у нас заказ для любого Вашего проекта, будь то серийное производство или разработка единичного прибора.

В нашем ассортименте представлены ведущие мировые производители активных и пассивных электронных компонентов.

Нашей специализацией является поставка электронной компонентной базы двойного назначения, продукции таких производителей как XILINX, Intel (ex.ALTERA), Vicor, Microchip, Texas Instruments, Analog Devices, Mini-Circuits, Amphenol, Glenair.

Сотрудничество с глобальными дистрибьюторами электронных компонентов, предоставляет возможность заказывать и получать с международных складов практически любой перечень компонентов в оптимальные для Вас сроки.

На всех этапах разработки и производства наши партнеры могут получить квалифицированную поддержку опытных инженеров.

Система менеджмента качества компании отвечает требованиям в соответствии с ГОСТ Р ИСО 9001, ГОСТ РВ 0015-002 и ЭС РД 009

Офис по работе с юридическими лицами:

105318, г.Москва, ул.Щербаковская д.3, офис 1107, 1118, ДЦ «Щербаковский»

Телефон: +7 495 668-12-70 (многоканальный)

Факс: +7 495 668-12-70 (доб.304)

E-mail: info@moschip.ru

Skype отдела продаж:
moschip.ru
moschip.ru_4
moschip.ru_6
moschip.ru_9