Mini-Mac Applicator

molex

Application Tooling Specification Sheet

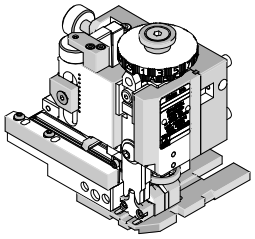

Order No. 63882-1000

FEATURES

- Directly adapts to most automatic wire processing machines
- Applicator designed to industry standard mounting and shut height 135.80mm (5.346")
- Quick set-up time; plus the crimp height, track and feed adjustments can be set without removing the applicator from the press
- Fine adjustment allows users to achieve target with little effort by adjusting in increments of .015mm (.0006") for conductor crimp height and .063mm (.0025") for insulation height
- Independent adjustment rings allow users to quickly adjust the conductor or insulation crimp height without affecting each other.

SCOPE

Products: Flat Blade Crimp Terminal 10-13 AWG

Terminal Series No.	Terminal Order No	Wire Size		Insulation Diameter		Strip Length	
		AWG	mm²	mm	In.	mm	In.
41422	40-02-1601	10-13	5.00-2.50	4.52	.178	5.08-5.84	.200-.230
	41422-4001	10-13	5.00-2.50	4.52	.178	5.08-5.84	.200-.230
For 14 and 18 double crimp application 63882-1200 Applicator is recommended.							

DEFINITION OF TERMS

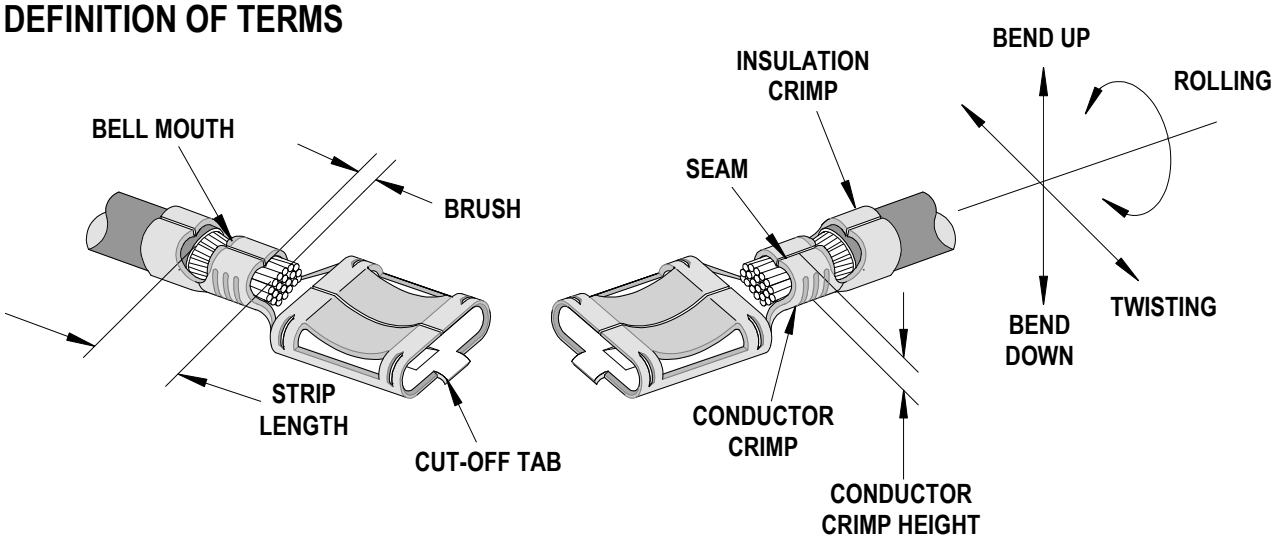

The above terminal drawing is a generic terminal representation. It is not an image of a terminal listed in the scope.

CRIMP SPECIFICATIONS

Terminal Series No.	Bell mouth		Cut-off Tab Maximum		Conductor Brush	
	mm	In.	mm	In.	mm	In.
41422			0.25	0.10		

Terminal Series No.	Bend up Bend down		Twist Roll		Punch Width (Ref)				Seam
	Degree		Degree		Conductor		Insulation		Seam shall not be open and no wire allowed out of the crimping area
					mm	In	mm	In	
41422					3.80	.150	5.10.	.200	

NOTE: Some of the specifications in these charts above are intentionally left blank due to the fact that the information does not currently exist.

After crimping, the conductor profile should measure the following.

Terminal Series No.	Wire Size		Conductor Crimp Height		Pull Force Minimum	
	AWG	mm^2	mm	In.	N	Lb.
41422	10	5.00	2.59-2.64	.102-.104	355.9	80.0
	12	3.00	2.36-2.41	.093-.095	311.4	70.0
	13	2.50	2.23-2.33	.088-.092	266.9	60.0

Tool Qualification Notes:

1. Pull Force should be measured with no influence from the insulation crimp.
2. The above specifications are guidelines to an optimum crimp.

PARTS LIST

Mini-Mac Applicator 63882-1000				
Item	**Order No**	**Engineering No.**	**Description**	**Quantity**
Perishable Tooling				
	63882-1070	63882-1070	Tool Kit (All "Y" Items)	REF.
1	11-18-4448	60739A101	Conductor Punch	1 Y
2	11-18-4449	60739A102	Combination Anvil	1 Y
3	11-18-4450	60739A103	Insulation Punch	1 Y
4	11-18-4451	60739A104	Cut-Off Plunger	1 Y
5	11-18-4452	60739A105	Plunger Retainer	1 Y
6	11-18-4454	60739A107	Pilot Pin	1 Y
7	11-18-4457	60739A110	Cut-off Die Blade	1 Y
Other Components				
8	11-18-4453	60739A106	Rear Plunger Striker	1
9	11-18-4455	60739A108	Terminal Hold Down	1
10	11-18-4456	60739A109	Hold Down Spring	1
11	11-18-4458	60739A111	Spacer	1
12	11-18-4467	60739A117	Tooling Washer	1
13	11-18-5012	60804A123	Wire Stop	1
14	11-24-1067	4996-4	Cut-Off Plunger Spring	1
15	63801-4510	63801-4510	Front Cover	1
16	63801-4558	63801-4558	Rear Cover	1
17	63803-5101	63803-5101	Conductor Bushing	1
Frame				
18	63801-3201	63801-3201	Top	1
19	63801-3282	63801-3282	Base	1
20	63801-6650	63801-6650	Track	1
Hardware				
21	N/A	N/A	#6-32 by 3/8" Long BHCS	1**
22	N/A	N/A	#6-32 by 3/4" Long SHCS	2**
23	N/A	N/A	#8-32 by 3/8" Long BHCS	2**
24	N/A	N/A	#8-32 by 1/4" Long SSS (Flat Point)	1**
25	N/A	N/A	3/64 by 5/8" Long Spirol Pin	2**
26	N/A	N/A	M3 by 6 Long SHCS	2**
27	N/A	N/A	M4 by 16 Long BHCS	2**
28	N/A	N/A	M4 by 22 Long SHCS	2**
29	N/A	N/A	M5 by 8 Long SHCS	1**
30	N/A	N/A	M8 by 20 Long BHCS	1**
** Available from an industrial supply company such as MSC (1-800-645-7270).				

Assembly Drawing

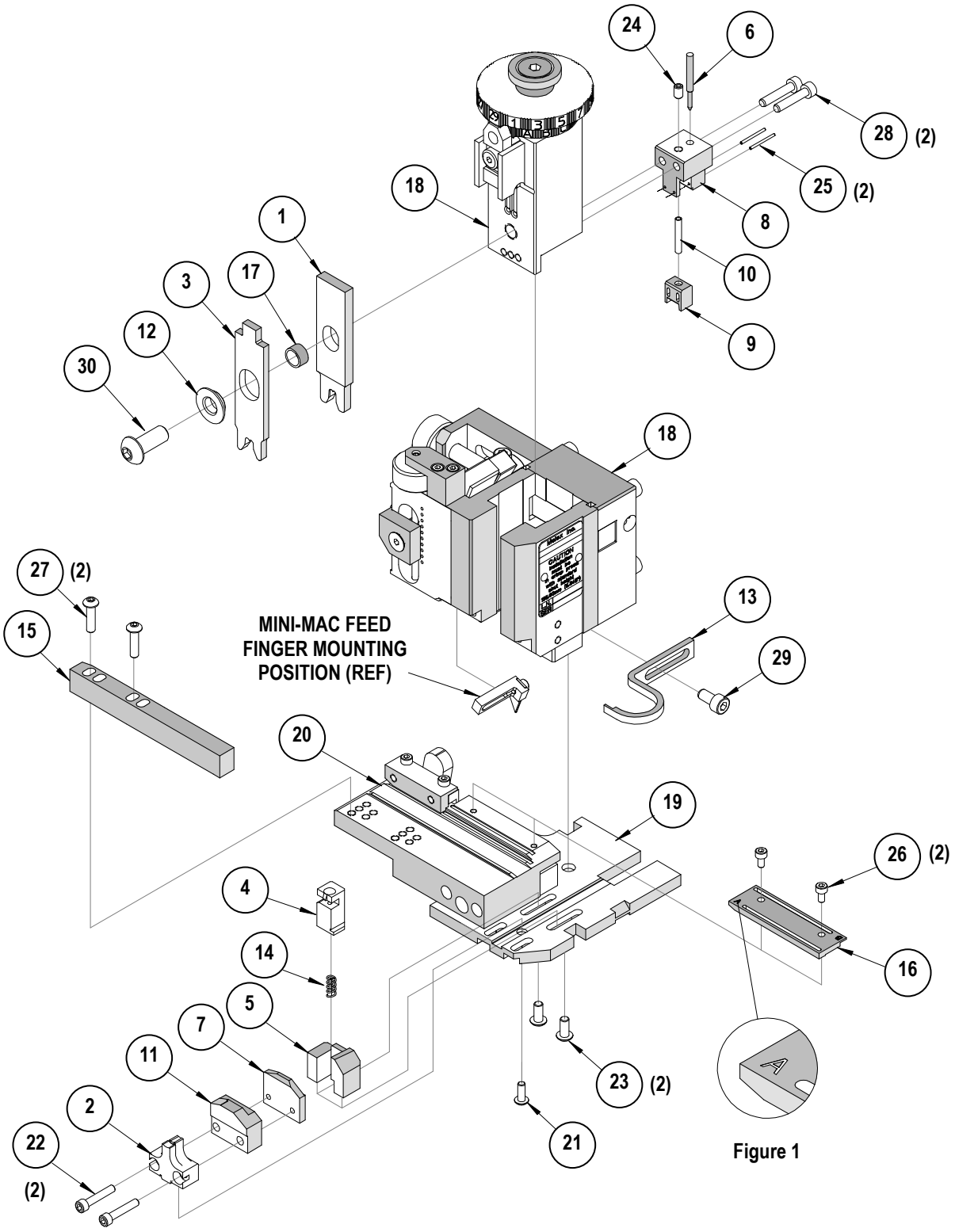

Figure 1

NOTES

1. Molex recommends an extra perishable tooling kit be maintained at your facility.
2. Verify tooling alignment by manually cycling the press and Applicator before crimping under power. Check that all screws are tight.
3. Slugs, Terminals, Dirt and Oil should be kept clear of work area.
4. Wear safety glasses at all times.
5. For recommended maintenance refer to the Mini-Mac Manual.

CAUTION: This applicator should only be used in a press with a shut height of 135.8 mm (5.346”). Tooling damage could result at a lower setting.

CAUTION: To prevent injury never operate this Applicator without the guards supplied with the press or wire-processing machine in place. Reference the press or wire processing manufacturer’s instruction manual.

CAUTION: Molex crimp specifications are valid only when used with Molex terminals, applicators and tooling.

Visit our Web site at http://www.molex.com

Общество с ограниченной ответственностью «МосЧип» ИНН 7719860671 / КПП 771901001
Адрес: 105318, г.Москва, ул.Щербаковская д.3, офис 1107

Данный компонент на территории Российской Федерации

Вы можете приобрести в компании MosChip.

Для оперативного оформления запроса Вам необходимо перейти по данной ссылке:

http://moschip.ru/get-element

Вы можете разместить у нас заказ для любого Вашего проекта, будь то серийное производство или разработка единичного прибора.

В нашем ассортименте представлены ведущие мировые производители активных и пассивных электронных компонентов.

Нашей специализацией является поставка электронной компонентной базы двойного назначения, продукции таких производителей как XILINX, Intel (ex.ALTERA), Vicor, Microchip, Texas Instruments, Analog Devices, Mini-Circuits, Amphenol, Glenair.

Сотрудничество с глобальными дистрибьюторами электронных компонентов, предоставляет возможность заказывать и получать с международных складов практически любой перечень компонентов в оптимальные для Вас сроки.

На всех этапах разработки и производства наши партнеры могут получить квалифицированную поддержку опытных инженеров.

Система менеджмента качества компании отвечает требованиям в соответствии с ГОСТ Р ИСО 9001, ГОСТ РВ 0015-002 и ЭС РД 009

Офис по работе с юридическими лицами:

105318, г.Москва, ул.Щербаковская д.3, офис 1107, 1118, ДЦ «Щербаковский»

Телефон: +7 495 668-12-70 (многоканальный)

Факс: +7 495 668-12-70 (доб.304)

E-mail: info@moschip.ru

Skype отдела продаж:
moschip.ru
moschip.ru_4
moschip.ru_6
moschip.ru_9