Agilent Technologies

Low Current Seven Segment Displays

Technical Data

HDSP-335x Series
HDSP-555x Series
HDSP-751x Series
HDSP-A10x Series
HDSP-A80x Series
HDSP-A90x Series
HDSP-E10x Series
HDSP-F10x Series
HDSP-G10x Series
HDSP-H10x Series
HDSP-K12x, K70x Series
HDSP-N10x Series
HDSP-N40x Series

Features

- **Low Power Consumption**
- **Industry Standard Size**
- **Industry Standard Pinout**
- **Choice of Character Size**
  7.6 mm (0.30 in), 10 mm (0.40 in), 10.9 mm (0.43 in), 14.2 mm (0.56 in), 20 mm (0.80 in)
- **Choice of Colors**
  AlGaAs Red, High Efficiency Red (HER), Yellow, Green
- **Excellent Appearance**
  Evenly Lighted Segments
  ±50° Viewing Angle
- **Design Flexibility**
  Common Anode or Common Cathode
  Single and Dual Digit
  Left and Right Hand Decimal Points
  ±1. Overflow Character
- **Categorized for Luminous Intensity**
  Yellow and Green Categorized for Color
  Use of Like Categories Yields a Uniform Display
- **Excellent for Long Digit String Multiplexing**

Description

These low current seven segment displays are designed for applications requiring low power consumption. They are tested and selected for their excellent low current characteristics to ensure that the segments are matched at low currents. Drive currents as low as 1 mA per segment are available.

Pin for pin equivalent displays are also available in a standard current or high light ambient design. The standard current displays are available in all colors and are ideal for most applications. The high light ambient displays are ideal for sunlight ambients or long string lengths. For additional information see the 7.6 mm Micro Bright Seven Segment Displays, 10 mm Seven Segment Displays, 7.6 mm/10.9 mm Seven Segment Displays, 14.2 mm Seven Segment Displays, 20 mm Seven Segment Displays, or High Light Ambient Seven Segment Displays data sheets.

Devices

AlGaAs HDSP-	HER HDSP-	Yellow HDSP-	Green HDSP-	Description	Package Drawing
A101	7511	A801	A901	7.6 mm Common Anode Right Hand Decimal	A
A103	7513	A803	A903	7.6 mm Common Cathode Right Hand Decimal	B
A107	7517	A807	A907	7.6 mm Common Anode ±1. Overflow	C
A108	7518	A808	A908	7.6 mm Common Cathode ±1. Overflow	D
F101				10 mm Common Anode Right Hand Decimal	E
F103				10 mm Common Cathode Right Hand Decimal	F
F107				10 mm Common Anode ±1. Overflow	G
F108				10 mm Common Cathode ±1. Overflow	H
G101				10 mm Two Digit Common Anode Right Hand Decimal	X
G103				10 mm Two Digit Common Cathode Right Hand Decimal	Y
E100	3350			10.9 mm Common Anode Left Hand Decimal	I
E101	3351			10.9 mm Common Anode Right Hand Decimal	J
E103	3353			10.9 mm Common Cathode Right Hand Decimal	K
E106	3356			10.9 mm Universal ±1. Overflow[1]	L
H101	5551			14.2 mm Common Anode Right Hand Decimal	M
H103	5553			14.2 mm Common Cathode Right Hand Decimal	N
H107	5557			14.2 mm Common Anode ±1. Overflow	O
H108	5558			14.2 mm Common Cathode ±1. Overflow	P
K121	K701			14.2 mm Two Digit Common Anode Right Hand Decimal	R
K123	K703			14.2 mm Two Digit Common Cathode Right Hand Decimal	S
N100				20 mm Common Anode Left Hand Decimal	Q
N101	N401			20 mm Common Anode Right Hand Decimal	T
N103	N403			20 mm Common Cathode Right Hand Decimal	U
N105				20 mm Common Cathode Left Hand Decimal	V
N106	N406			20 mm Universal ±1. Overflow[1]	W

Note:
1. Universal pinout brings the anode and cathode of each segment's LED out to separate pins. See internal diagrams L or W.

Part Numbering System

5082 - x xx x - x x x xx
HDSP - x xx x - x x x xx

Mechanical Options[1]
00: No mechanical option

Color Bin Options[1,2]
0: No color bin limitation

Maximum Intensity Bin[1,2]
0: No maximum intensity bin limitation

Minimum Intensity Bin[1,2]
0: No minimum intensity bin limitation

Device Configuration/Color[1]
G: Green

Device Specific Configuration[1]
Refer to respective datasheet

Package[1]
Refer to Respective datasheet

Notes:

1. For codes not listed in the figure above, please refer to the respective datasheet or contact your nearest Agilent representative for details.
2. Bin options refer to shippable bins for a part-number. Color and Intensity Bins are typically restricted to 1 bin per tube (exceptions may apply). Please refer to respective datasheet for specific bin limit information.

Package Dimensions

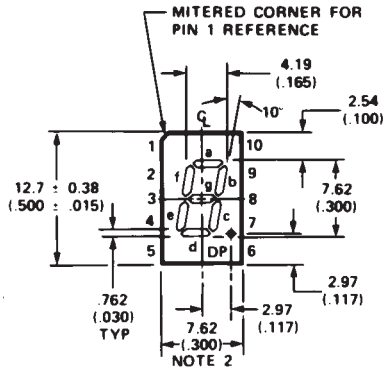

A, B

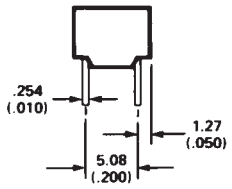

A, B, C, D

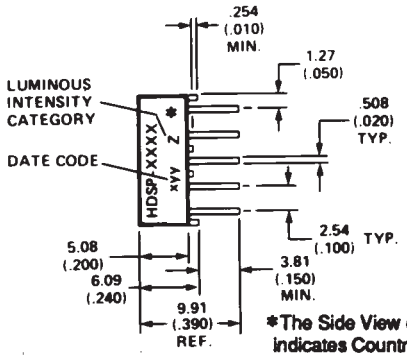

*The Side View of package indicates Country of Origin.

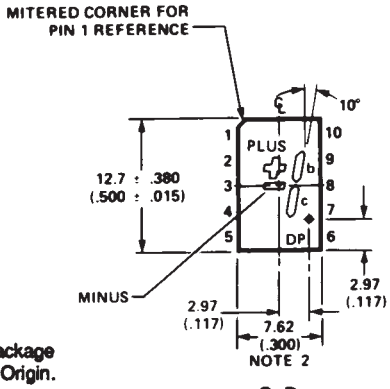

C, D

PIN	FUNCTION			
	A	B	C	D
1	ANODE [4]	CATHODE [5]	ANODE [4]	CATHODE [5]
2	CATHODE f	ANODE f	CATHODE PLUS	ANODE PLUS
3	CATHODE g	ANODE g	CATHODE MINUS	ANODE MINUS
4	CATHODE e	ANODE e	NC	NC
5	CATHODE d	ANODE d	NC	NC
6	ANODE [4]	CATHODE [5]	ANODE [4]	CATHODE [5]
7	CATHODE DP	ANODE DP	CATHODE DP	ANODE DP
8	CATHODE c	ANODE c	CATHODE c	ANODE c
9	CATHODE b	ANODE b	CATHODE b	ANODE b
10	CATHODE a	ANODE a	NC	NC

NOTES:

1. ALL DIMENSIONS IN MILLIMETRES (INCHES).

2. MAXIMUM.

3. ALL UNTOLERANCED DIMENSIONS ARE FOR REFERENCE ONLY.

4. REDUNDANT ANODES.

5. REDUNDANT CATHODES.

Package Dimensions (cont.)

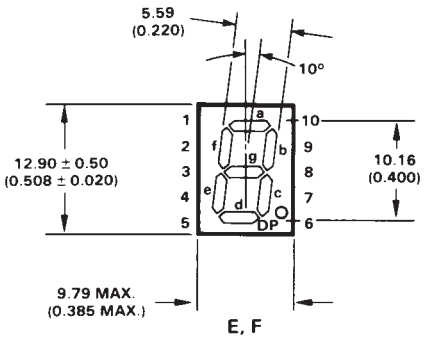

E, F

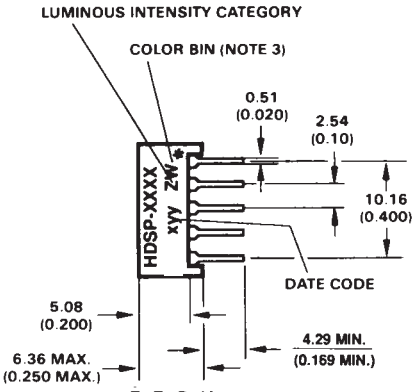

E, F, G, H

* The Side View of package indicates Country of Origin.

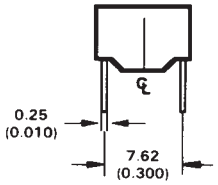

E, F, G, H

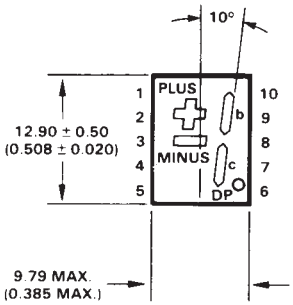

G, H

PIN	FUNCTION			
	E	F	G	H
1	ANODE[4]	CATHODE[5]	ANODE[4]	CATHODE[5]
2	CATHODE f	ANODE f	CATHODE PLUS	ANODE PLUS
3	CATHODE g	ANODE g	CATHODE MINUS	ANODE MINUS
4	CATHODE e	ANODE e	NC	NC
5	CATHODE d	ANODE d	NC	NC
6	ANODE[4]	CATHODE[5]	ANODE[4]	CATHODE[5]
7	CATHODE DP	ANODE DP	CATHODE DP	ANODE DP
8	CATHODE c	ANODE c	CATHODE c	ANODE c
9	CATHODE b	ANODE b	CATHODE b	ANODE b
10	CATHODE a	ANODE a	NC	NC

NOTES:
1. ALL DIMENSIONS IN MILLIMETRES (INCHES).
2. ALL UNTOLERANCED DIMENSIONS ARE FOR REFERENCE ONLY.
3. FOR YELLOW AND GREEN SERIES PRODUCT ONLY.
4. REDUNDANT ANODES.
5. REDUNDANT CATHODES.

Package Dimensions (cont.)

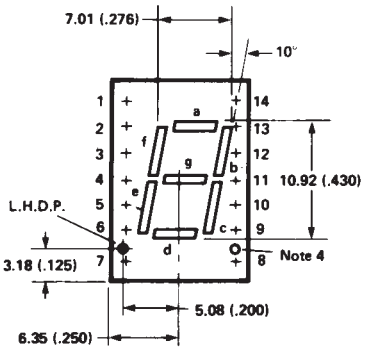

I

FRONT VIEW

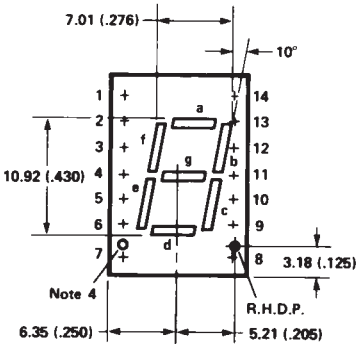

J, K

FRONT VIEW

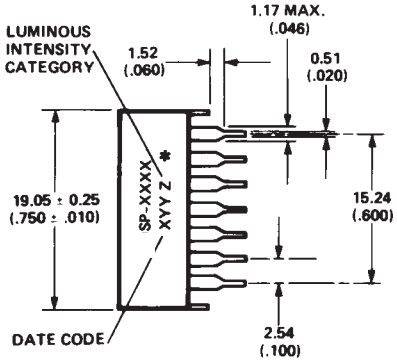

SIDE VIEW

*The Side View of package indicates Country of Origin.

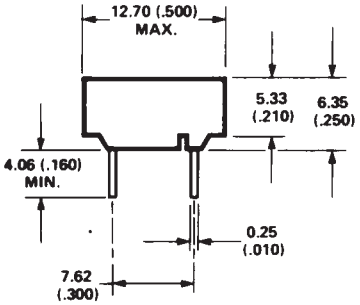

END VIEW

PIN	FUNCTION			
	I	J	K	L
1	CATHODE-a	CATHODE-a	ANODE-a	CATHODE-d
2	CATHODE-f	CATHODE-f	ANODE-f	ANODE-d
3	ANODE[3]	ANODE[3]	CATHODE[6]	NO PIN
4	NO PIN	NO PIN	NO PIN	CATHODE-c
5	NO PIN	NO PIN	NO PIN	CATHODE-e
6	CATHODE-dp	NO CONN.[5]	NO CONN.[5]	ANODE-e
7	CATHODE-e	CATHODE-e	ANODE-e	ANODE-c
8	CATHODE-d	CATHODE-d	ANODE-d	ANODE-dp
9	NO CONN.[5]	CATHODE-dp	ANODE-dp	CATHODE-dp
10	CATHODE-c	CATHODE-c	ANODE-c	CATHODE-b
11	CATHODE-g	CATHODE-g	ANODE-g	CATHODE-a
12	NO PIN	NO PIN	NO PIN	NO PIN
13	CATHODE-b	CATHODE-b	ANODE-b	ANODE-a
14	ANODE[3]	ANODE[3]	CATHODE[6]	ANODE-b

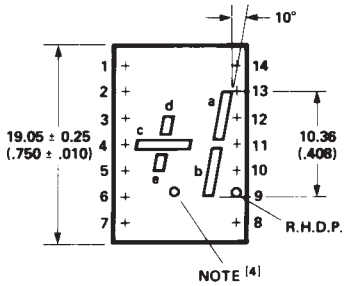

L

NOTES:
1. ALL DIMENSIONS IN MILLIMETRES (INCHES).
2. ALL UNTOLERANCED DIMENSIONS ARE FOR REFERENCE ONLY.
3. REDUNDANT ANODES.
4. UNUSED dp POSITION.
5. SEE INTERNAL CIRCUIT DIAGRAM.
6. REDUNDANT CATHODES.
7. SEE PART NUMBER TABLE FOR L.H.D.P. AND R.H.D.P. DESIGNATION.

Package Dimensions (cont.)

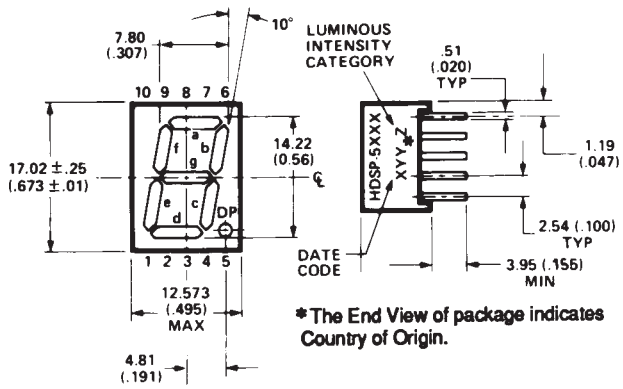

M, N
FRONT VIEW

M, N, O, P
TOP END VIEW

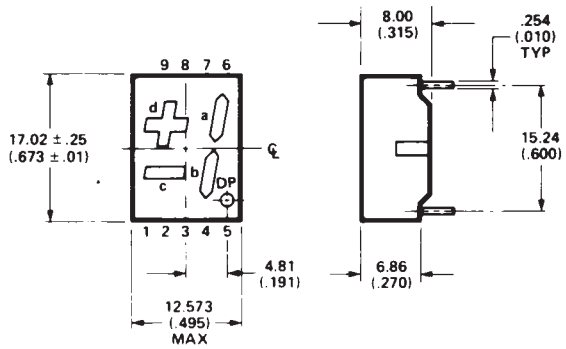

FRONT VIEW O, P

SIDE VIEW M, N, O, P

PIN	FUNCTION			
	M	N	O	P
1	CATHODE e	ANODE e	CATHODE c	ANODE c
2	CATHODE d	ANODE d	ANODE c, d	CATHODE c, d
3	ANODE[4]	CATHODE[5]	CATHODE b	ANODE b
4	CATHODE c	ANODE c	ANODE a, b, DP	CATHODE a, b, DP
5	CATHODE DP	ANODE DP	CATHODE DP	ANODE DP
6	CATHODE b	ANODE b	CATHODE a	ANODE a
7	CATHODE a	ANODE a	ANODE a, b, DP	CATHODE a, b, DP
8	ANODE[4]	CATHODE[5]	ANODE c, d	CATHODE c, d
9	CATHODE f	ANODE f	CATHODE d	ANODE d
10	CATHODE g	ANODE g	NO PIN	NO PIN

NOTES:

1. ALL DIMENSIONS IN MILLIMETRES (INCHES).
2. MAXIMUM.
3. ALL UNTOLERANCED DIMENSIONS ARE FOR REFERENCE ONLY.
4. REDUNDANT ANODES.
5. REDUNDANT CATHODES.

Package Dimensions (cont.)

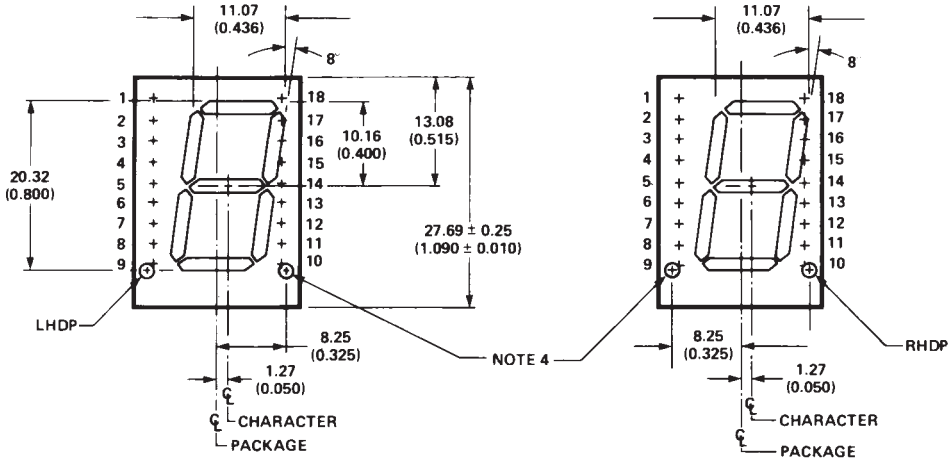

FRONT VIEW Q, V

FRONT VIEW T, U

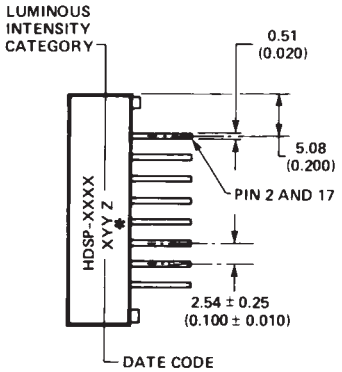

SIDE VIEW Q, T, U, V, W

*The Side View of package indicates Country of Origin.

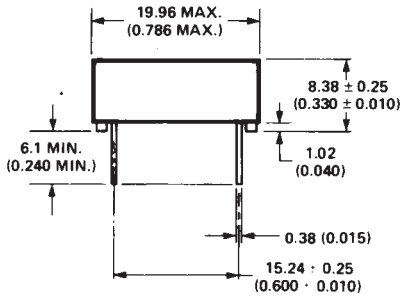

END VIEW Q, T, U, V, W

Pin	Function				
	Q	T	U	V	W
1	NO PIN	NO PIN	NO PIN	NO PIN	NO PIN
2	CATHODE a	CATHODE a	ANODE a	ANODE a	CATHODE a
3	CATHODE f	CATHODE f	ANODE f	ANODE f	ANODE d
4	ANODE[3]	ANODE[3]	CATHODE[6]	CATHODE[6]	CATHODE d
5	CATHODE e	CATHODE e	ANODE e	ANODE e	CATHODE c
6	ANODE[3]	ANODE[3]	CATHODE[6]	CATHODE[6]	CATHODE e
7	CATHODE dp	NO CONNEC.	NO CONNEC.	ANODE dp	ANODE e
8	NO PIN	NO PIN	NO PIN	NO PIN	CATHODE dp
9	NO PIN	NO PIN	NO PIN	NO PIN	NO PIN
10	NO PIN	CATHODE dp	ANODE dp	NO PIN	ANODE dp
11	CATHODE d	CATHODE d	ANODE d	ANODE d	CATHODE dp
12	ANODE[3]	ANODE[3]	CATHODE[6]	CATHODE[6]	CATHODE b
13	CATHODE c	CATHODE c	ANODE c	ANODE c	ANODE b
14	CATHODE g	CATHODE g	ANODE g	ANODE g	ANODE c
15	CATHODE b	CATHODE b	ANODE b	ANODE b	ANODE a
16	NO PIN	NO PIN	NO PIN	NO PIN	NO PIN
17	ANODE[3]	ANODE[3]	CATHODE[6]	CATHODE[6]	CATHODE a
18	NO PIN	NO PIN	NO PIN	NO PIN	NO PIN

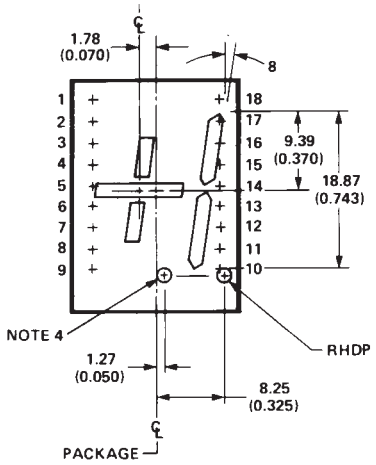

FRONT VIEW W

NOTES:

1. ALL DIMENSIONS IN MILLIMETRES (INCHES).
2. ALL UNTOLERANCED DIMENSIONS ARE FOR REFERENCE ONLY.
3. REDUNDANT ANODES.
4. UNUSED dp POSITION.
5. SEE INTERNAL CIRCUIT DIAGRAM.
6. REDUNDANT CATHODES.
7. SEE PART NUMBER TABLE FOR L.H.D.P. AND R.H.D.P. DESIGNATION.

Package Dimensions (cont.)

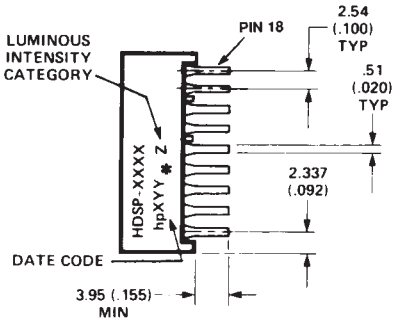

TOP END VIEW R, S

*The Side View of package indicates Country of Origin.

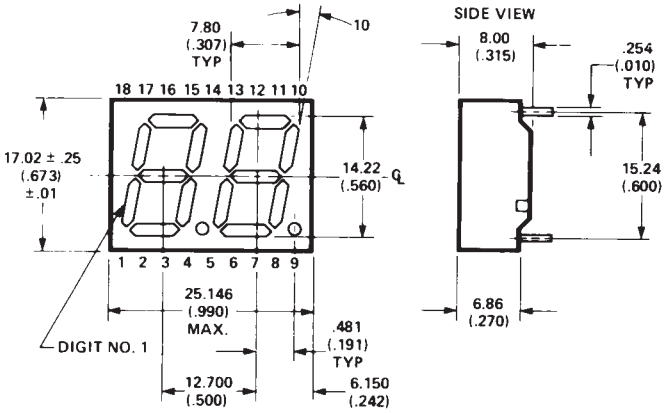

FRONT VIEW R, S

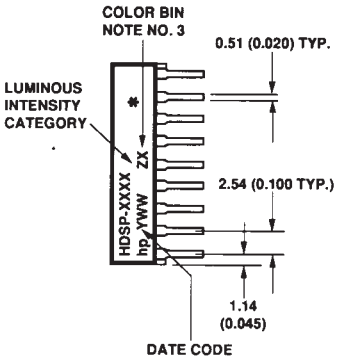

TOP END VIEW X, Y

*The Side View of package indicates Country of Origin.

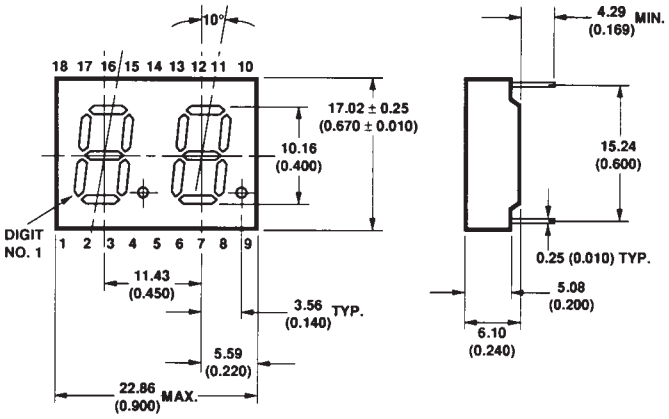

FRONT VIEW X, Y

Pin	Function	
	R,X	S,Y
1	E CATHODE NO. 1	E ANODE NO. 1
2	D CATHODE NO. 1	D ANODE NO. 1
3	C CATHODE NO. 1	C ANODE NO. 1
4	DP CATHODE NO. 1	DP ANODE NO. 1
5	E CATHODE NO. 2	E ANODE NO. 2
6	D CATHODE NO. 2	D ANODE NO. 2
7	G CATHODE NO. 2	G ANODE NO. 2
8	C CATHODE NO. 2	C ANODE NO. 2
9	DP CATHODE NO. 2	DP ANODE NO. 2
10	B CATHODE NO. 2	B ANODE NO. 2
11	A CATHODE NO. 2	A ANODE NO .2
12	F CATHODE NO. 2	F ANODE NO. 2
13	DIGIT NO. 2 ANODE	DIGIT NO. 2 CATHODE
14	DIGIT NO. 1 ANODE	DIGIT NO. 1 CATHODE
15	B CATHODE NO. 1	B ANODE NO. 1
16	A CATHODE NO. 1	A ANODE NO. 1
17	G CATHODE NO. 1	G ANODE NO. 1
18	F CATHODE NO. 1	F ANODE NO. 1

NOTES:
1. DIMENSIONS ARE IN MILLIMETRES (INCHES).
2. ALL UNTOLERANCED DIIMENSIONS ARE FOR REFERENCE ONLY.
3. WHERE APPLICABLE.

Internal Circuit Diagram

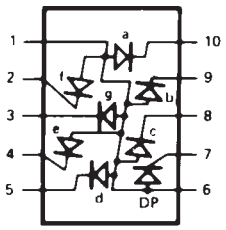

A, E

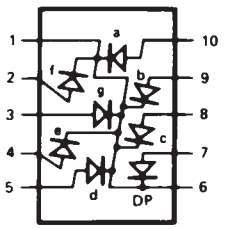

B, F

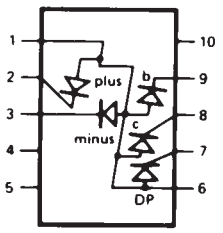

C, G

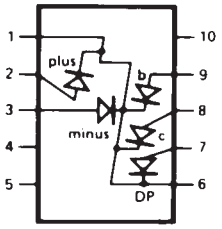

D, H

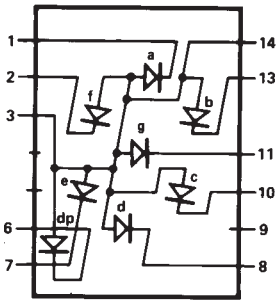

I

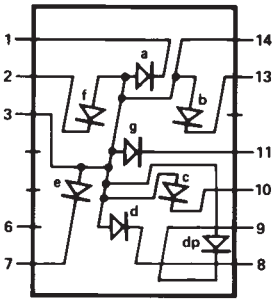

J

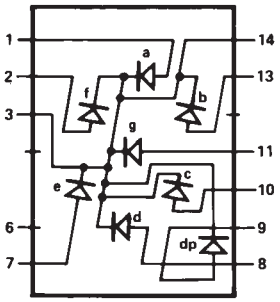

K

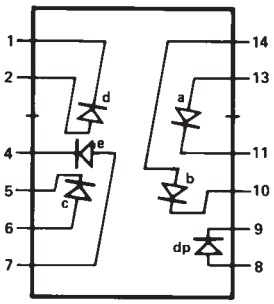

L

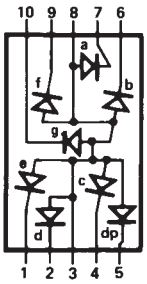

M

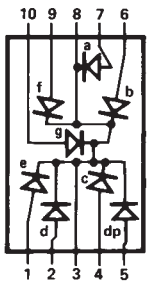

N

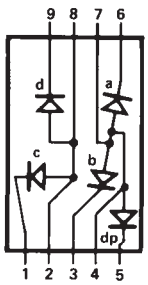

O

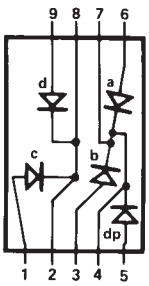

P

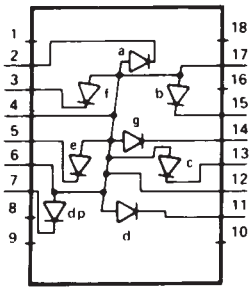

Q

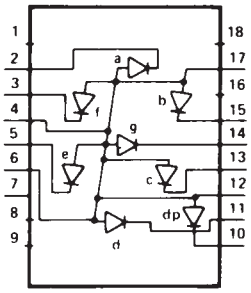

T

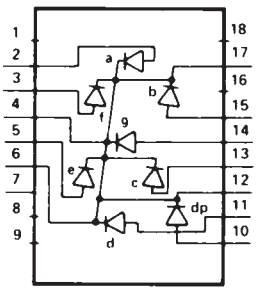

U

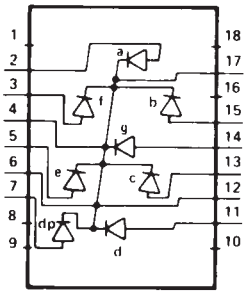

V

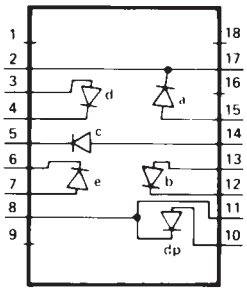

W

Internal Circuit Diagram (cont.)

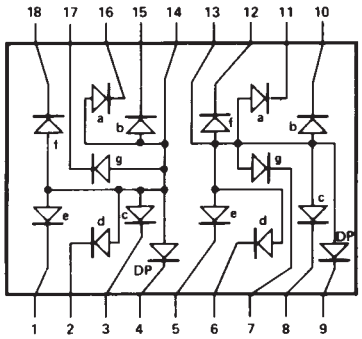

R, X

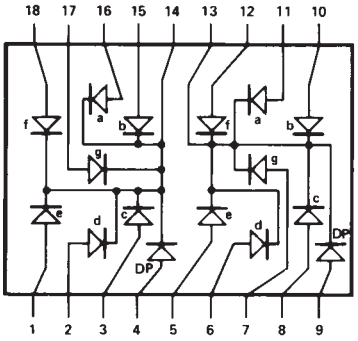

S, Y

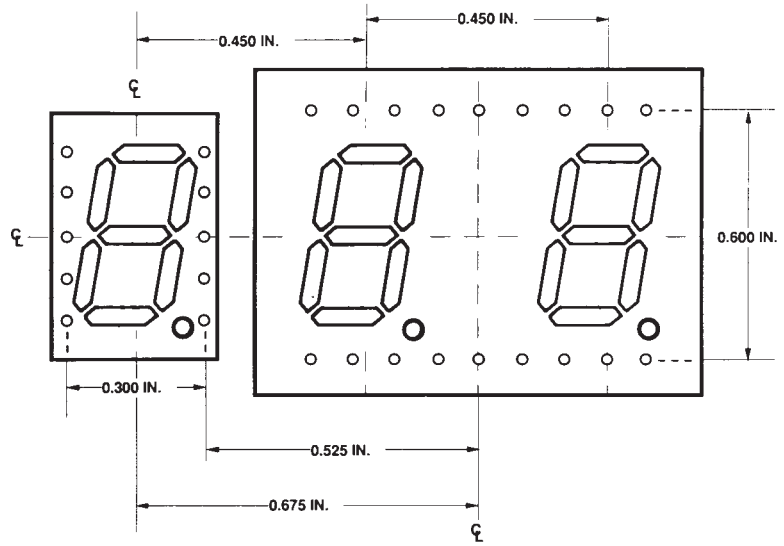

HOLE PATTERN FOR PCB LAYOUT TO ACHIEVE UNIFORM 0.450 In. DIGIT TO DIGIT PITCH. FOR HDSP-FXXX TO HDSP-GXXX.

Absolute Maximum Ratings

Description	AlGaAs Red - HDSP-A10X/E10X/H10X K12X/N10X/N40X F10X, G10X Series	HER HDSP-751X/ 335X/555X/ K70X Series	Yellow HDSP-A80X Series	Green HDSP-A90X Series	Units
Average Power per Segment or DP	37	52		64	mW
Peak Forward Current per Segment or DP	45				mA
DC Forward Current per Segment or DP	15[1]	15[2]			mA
Operating Temperature Range	-20 to +100	-40 to +100			°C
Storage Temperature Range	-55 to +100				°C
Reverse Voltage per Segment or DP	3.0				V
Wave Soldering Temperature for 3 Seconds (1.60 mm [0.063 in.] below seating body)	250				°C

Notes:
1. Derate above 91°C at 0.53 mA/°C.
2. Derate HER/Yellow above 80°C at 0.38 mA/°C and Green above 71°C at 0.31 mA/°C.

Electrical/Optical Characteristics at T_A = 25°C

AlGaAs Red

Device Series HDSP-	Parameter	Symbol	Min.	Typ.	Max.	Units	Test Conditions
A10x	Luminous Intensity/Segment[1,2] (Digit Average)	I_V	315	600		µcd	I_F = 1 mA
				3600			I_F = 5 mA
F10x, G10x			330	650			I_F = 1 mA
				3900			I_F = 5 mA
E10x			390	650			I_F = 1 mA
				3900			I_F = 5 mA
H10x, K12x			400	700			I_F = 1 mA
				4200			I_F = 5 mA
N10x, N40x			270	590			I_F = 1 mA
				3500			I_F = 5 mA
All Devices	Forward Voltage/Segment or DP	V_F		1.6		V	I_F = 1 mA
				1.7			I_F = 5 mA
				1.8	2.2		I_F = 20 mA Pk
	Peak Wavelength	λ_{PEAK}		645		nm	
	Dominant Wavelength[3]	λ_d		637		nm	
	Reverse Voltage/Segment or DP[4]	V_R	3.0	15		V	I_R = 100 µA
	Temperature Coefficient of V_F/Segment or DP	ΔV_F/°C		-2 mV		mV/°C	
A10x	Thermal Resistance LED Junction-to-Pin	$R\theta_{J\text{-}PIN}$		255		°C/W/Seg	
F10x, G10x				320			
E10x				340			
H10x, K12x				400			
N10x, N40x				430			

High Efficiency Red

Device Series HDSP-	Parameter	Symbol	Min.	Typ.	Max.	Units	Test Conditions
751x	Luminous Intensity/Segment[1,2] (Digit Average)	I_V	160	270		mcd	I_F = 2 mA
				1050			I_F = 5 mA
335x, 555x, K70x			200	300			I_F = 2 mA
				1200			I_F = 5 mA
			270	370			I_F = 2 mA
				1480			I_F = 5 mA
All Devices	Forward Voltage/Segment or DP	V_F		1.6		V	I_F = 2 mA
				1.7			I_F = 5 mA
				2.1	2.5		I_F = 20 mA Pk
	Peak Wavelength	λ_{PEAK}		635		nm	
	Dominant Wavelength[3]	λ_d		626		nm	
	Reverse Voltage/Segment or DP[4]	V_R	3.0	30		V	I_R = 100 μA
	Temperature Coefficient of V_F/Segment or DP	ΔV_F/°C		-2		mV/°C	
751x	Thermal Resistance LED Junction-to-Pin	$R\theta_{J\text{-}PIN}$		200		°C/W	
335x				280			
555x, K70x				345			

Yellow

Device Series HDSP-	Parameter	Symbol	Min.	Typ.	Max.	Units	Test Conditions
A80x	Luminous Intensity/Segment[1,2] (Digit Average)	I_V	250	420		mcd	I_F = 4 mA
				1300			I_F = 10 mA
	Forward Voltage/Segment or DP	V_F		1.7		V	I_F = 4 mA
				1.8			I_F = 5 mA
				2.1	2.5		I_F = 20 mA Pk
	Peak Wavelength	λ_{PEAK}		583		nm	
	Dominant Wavelength[3,5]	λ_d	581.5	585	592.5	nm	
	Reverse Voltage/Segment or DP[4]	V_R	3.0	30		V	I_R = 100 μA
	Temperature Coefficient of V_F/Segment or DP	ΔV_F/°C		-2		mV/°C	
	Thermal Resistance LED Junction-to-Pin	$R\theta_{J\text{-}PIN}$		200		°C/W	

Green

Device Series HDSP-	Parameter	Symbol	Min.	Typ.	Max.	Units	Test Conditions
A90x	Luminous Intensity/Segment[1,2] (Digit Average)	I_V	250	475		mcd	I_F = 4 mA
				1500			I_F = 10 mA
	Forward Voltage/Segment or DP	V_F		1.9		V	I_F = 4 mA
				2.0			I_F = 10 mA
				2.1	2.5		I_F = 20 mA Pk
	Peak Wavelength	λ_{PEAK}		566		nm	
	Dominant Wavelength[3,5]	λ_d		571	577	nm	
	Reverse Voltage/Segment or DP[4]	V_R	3.0	30		V	I_R = 100 μA
	Temperature Coefficient of V_F/Segment or DP	ΔV_F/°C		-2		mV/°C	
	Thermal Resistance LED Junction-to-Pin	$R\theta_{J\text{-}PIN}$		200		°C/W	

Notes:
1. Device case temperature is 25°C prior to the intensity measurement.
2. The digits are categorized for luminous intensity. The intensity category is designated by a letter on the side of the package.
3. The dominant wavelength, λ_d, is derived from the CIE chromaticity diagram and is the single wavelength which defines the color of the device.
4. Typical specification for reference only. Do not exceed absolute maximum ratings.
5. The yellow (HDSP-A800) and Green (HDSP-A900) displays are categorized for dominant wavelength. The category is designated by a number adjacent to the luminous intensity category letter.

AlGaAs Red

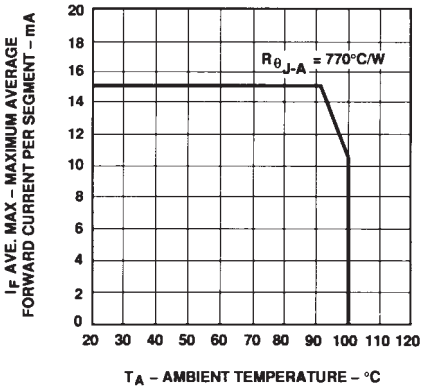

Figure 1. Maximum Allowable Average or DC Current vs. Ambient Temperature.

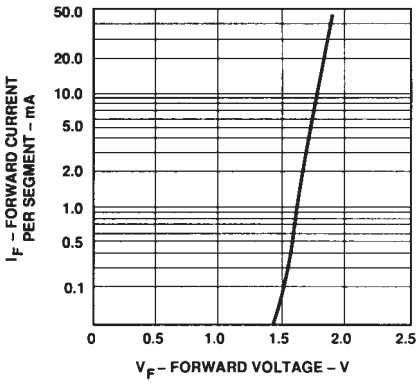

Figure 2. Forward Current vs. Forward Voltage.

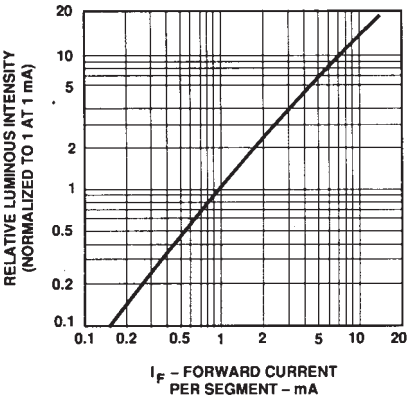

Figure 3. Relative Luminous Intensity vs. DC Forward Current.

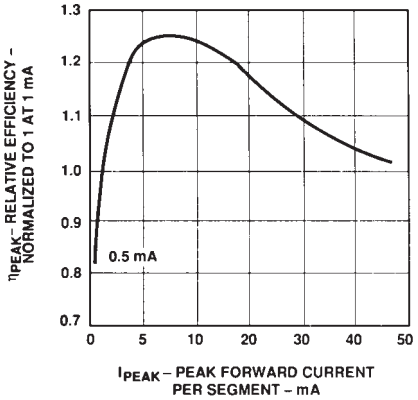

Figure 4. Relative Efficiency (Luminous Intensity per Unit Current) vs. Peak Current.

HER, Yellow, Green

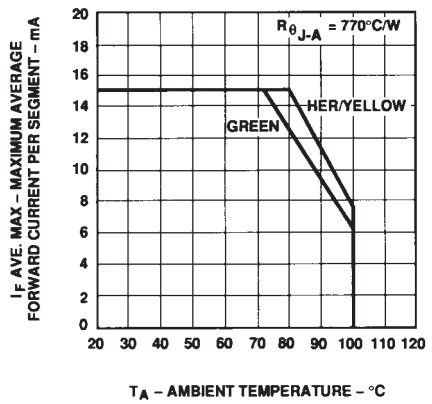

Figure 5. Maximum Allowable Average or DC Current vs. Ambient Temperature.

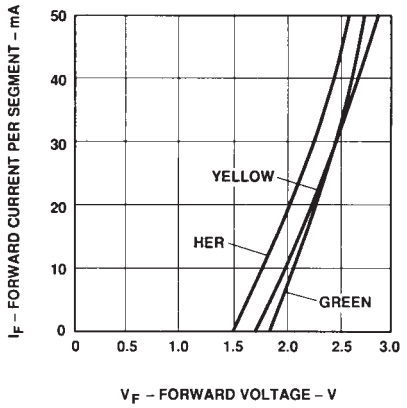

Figure 6. Forward Current vs. Forward Voltage.

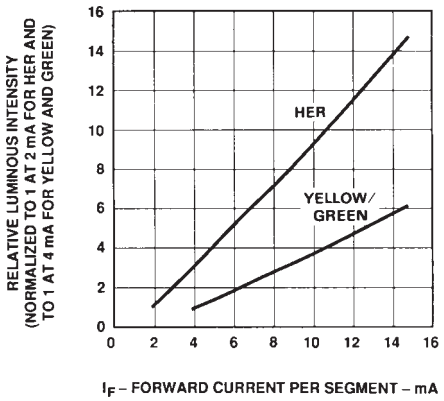

Figure 7. Relative Luminous Intensity vs. DC Forward Current.

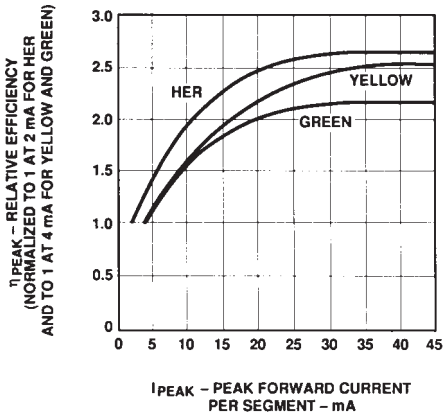

Figure 8. Relative Efficiency (Luminous Intensity per Unit Current) vs. Peak Current.

Intensity Bin Limits (mcd)
AlGaAs Red

HDSP-A10x		
IV Bin Category	**Min.**	**Max.**
E	0.315	0.520
F	0.428	0.759
G	0.621	1.16
H	0.945	1.71
I	1.40	2.56
J	2.10	3.84
K	3.14	5.75
L	4.70	8.55

HDSP-E10x/F10x/G10x		
IV Bin Category	**Min.**	**Max.**
D	0.391	0.650
E	0.532	0.923
F	0.755	1.39
G	1.13	2.08
H	1.70	3.14

HDSP-H10x/K12x		
IV Bin Category	**Min.**	**Max.**
C	0.415	0.690
D	0.565	0.990
E	0.810	1.50
F	1.20	2.20
G	1.80	3.30
H	2.73	5.00
I	4.09	7.50

HDSP-N10x		
IV Bin Category	**Min.**	**Max.**
A	0.270	0.400
B	0.325	0.500
C	0.415	0.690
D	0.565	0.990
E	0.810	1.50
F	1.20	2.20
G	1.80	3.30
H	2.73	5.00
I	4.09	7.50

Intensity Bin Limits (mcd), continued

HER

HDSP-751x		
IV Bin Category	**Min.**	**Max.**
B	0.160	0.240
C	0.200	0.300
D	0.250	0.385
E	0.315	0.520
F	0.428	0.759
G	0.621	1.16

HDSP-751x		
IV Bin Category	**Min.**	**Max.**
B	0.240	0.366
C	0.300	0.477
D	0.391	0.650
E	0.532	0.923
F	0.755	1.39
G	1.13	2.08
H	1.70	3.14

HDSP-555x/K70x		
IV Bin Category	**Min.**	**Max.**
A	0.270	0.400
B	0.325	0.500
C	0.415	0.690
D	0.565	0.990
E	0.810	1.50
F	1.20	2.20
G	1.80	3.30
H	2.73	5.00
I	4.09	7.50

Intensity Bin Limits (mcd), continued

Yellow

HDSP-A80x		
IV Bin Category	**Min.**	**Max.**
D	0.250	0.385
E	0.315	0.520
F	0.425	0.760
G	0.625	1.14
H	0.940	1.70
I	1.40	2.56
J	2.10	3.84
K	3.14	5.76
L	4.71	8.64
M	7.07	13.00
N	10.60	19.40
O	15.90	29.20
P	23.90	43.80
Q	35.80	65.60

Green

HDSP-A90x		
IV Bin Category	**Min.**	**Max.**
E	0.315	0.520
F	0.425	0.760
G	0.625	1.14
H	0.940	1.70
I	1.40	2.56
J	2.10	3.84
K	3.14	5.76
L	4.71	8.64
M	7.07	13.00
N	10.60	19.40
O	15.90	29.20
P	23.90	43.80
Q	35.80	65.60

Color Categories

Color	Bin	Dominant Wavelength (nm) Min.	Dominant Wavelength (nm) Max.
Yellow	1	581.50	585.00
	3	584.00	587.50
	2	586.50	590.00
	4	589.00	592.50
Green	2	573.00	577.00
	3	570.00	574.00
	4	567.00	571.00
	5	564.00	568.00

Note:
All categories are established for classification of products. Products may not be available in all categories. Please contact your local Agilent representatives for further clarification/information.

Electrical/Optical

For more information on electrical/optical characteristics, please see Application Note 1005.

Contrast Enhancement

For information on contrast enhancement, please see Application Note 1015.

Soldering/Cleaning

Cleaning agents from the ketone family (acetone, methyl ethyl ketone, etc.) and from the chorinated hydrocarbon family (methylene chloride, trichloro-ethylene, carbon tetrachloride, etc.) are not recommended for cleaning LED parts. All of these various solvents attack or dissolve the encapsulating epoxies used to form the package of plastic LED parts.

For information on soldering LEDs, please refer to Application Note 1027.

www.agilent.com/semiconductors
For product information and a complete list of distributors, please go to our web site.
For technical assistance call:
Americas/Canada: +1 (800) 235-0312 or (916) 788 6763
Europe: +49 (0) 6441 92460
China: 10800 650 0017
Hong Kong: (+65) 6271 2451
India, Australia, New Zealand: (+65) 6271 2394
Japan: (+81 3) 3335-8152(Domestic/International), or 0120-61-1280(Domestic Only)
Korea: (+65) 6271 2194
Malaysia, Singapore: (+65) 6271 2054
Taiwan: (+65) 6271 2654
Data subject to change.
Copyright © 2005 Agilent Technologies, Inc.
Obsoletes 5988-8412EN
January 19, 2005
5989-0080EN

Общество с ограниченной ответственностью «МосЧип» ИНН 7719860671 / КПП 771901001
Адрес: 105318, г.Москва, ул.Щербаковская д.3, офис 1107

Данный компонент на территории Российской Федерации

Вы можете приобрести в компании MosChip.

Для оперативного оформления запроса Вам необходимо перейти по данной ссылке:

http://moschip.ru/get-element

Вы можете разместить у нас заказ для любого Вашего проекта, будь то серийное производство или разработка единичного прибора.

В нашем ассортименте представлены ведущие мировые производители активных и пассивных электронных компонентов.

Нашей специализацией является поставка электронной компонентной базы двойного назначения, продукции таких производителей как XILINX, Intel (ex.ALTERA), Vicor, Microchip, Texas Instruments, Analog Devices, Mini-Circuits, Amphenol, Glenair.

Сотрудничество с глобальными дистрибьюторами электронных компонентов, предоставляет возможность заказывать и получать с международных складов практически любой перечень компонентов в оптимальные для Вас сроки.

На всех этапах разработки и производства наши партнеры могут получить квалифицированную поддержку опытных инженеров.

Система менеджмента качества компании отвечает требованиям в соответствии с ГОСТ Р ИСО 9001, ГОСТ РВ 0015-002 и ЭС РД 009

Офис по работе с юридическими лицами:

105318, г.Москва, ул.Щербаковская д.3, офис 1107, 1118, ДЦ «Щербаковский»

Телефон: +7 495 668-12-70 (многоканальный)

Факс: +7 495 668-12-70 (доб.304)

E-mail: info@moschip.ru

Skype отдела продаж:
moschip.ru
moschip.ru_4
moschip.ru_6
moschip.ru_9