FERD40L60C

60 V field-effect rectifier diode

Datasheet - production data

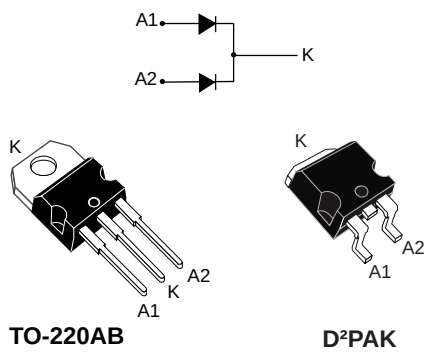

Features

- ST advanced rectifier process
- Stable leakage current over reverse voltage
- Reduced leakage current
- Low forward voltage drop
- High frequency operation

Description

The device is based on a proprietary technology that achieves the best in class V_F/I_R trade-off for a given silicon surface.

This 60 V rectifier has been optimized for use in confined applications where both efficiency and thermal performance are key.

This device is suitable for use in adapters and chargers.

Table 1: Device summary

Symbol	Value
$I_{F(AV)}$	2 x 20 A
V_{RRM}	60 V
V_F (typ.)	0.375 V
T_j (max.)	150 °C

This is information on a product in full production. www.st.com

1 Characteristics

Table 2: Absolute ratings (limiting values at 25 °C, per diode, unless otherwise specified)

Symbol	Parameter			Value	Unit
V_{RRM}	Repetitive peak reverse voltage			60	V
$I_{F(RMS)}$	Forward rms current			60	A
$I_{F(AV)}$	Average forward current δ = 0.5, square wave	T_C = 130 °C	Per diode	20	A
			Per device	40	
I_{FSM}	Surge non repetitive forward current	t_p = 10 ms sinusoidal		250	A
T_{stg}	Storage temperature range			-65 to +175	°C
T_j	Maximum operating junction temperature (1)			+150	°C

Notes:

(1)$(dP_{tot}/dT_j) < (1/R_{th(j-a)})$ condition to avoid thermal runaway for a diode on its own heatsink.

Table 3: Thermal resistance parameters

Symbol	Parameter		Max. value	Unit
$R_{th(j-c)}$	Junction to case	Per diode	1.3	°C/W
		Per device	0.8	
$R_{th(c)}$	Coupling		0.3	

Table 4: Static electrical characteristics, per diode

Symbol	Parameter	Test conditions		Min.	Typ.	Max.	Unit
I_R(1)	Reverse leakage current	T_j = 25 °C	$V_R = V_{RRM}$	-		1.1	mA
		T_j = 125 °C		-	40	80	
		T_j = 125 °C	V_R = 45 V	-	23	46	
V_F(2)	Forward voltage drop	T_j = 25 °C	I_F = 4 A	-	0.32	0.36	V
		T_j = 125 °C		-	0.26	0.3	
		T_j = 25 °C	I_F = 10 A	-	0.4	0.445	
		T_j = 125 °C		-	0.375	0.425	
		T_j = 25 °C	I_F = 20 A	-	0.49	0.545	
		T_j = 125 °C		-	0.515	0.58	

Notes:

(1)Pulse test: t_p = 5 ms, δ < 2%

(2)Pulse test: t_p = 380 µs, δ < 2%

To evaluate the conduction losses use the following equation:

$P = 0.27 \times I_{F(AV)} + 0.0155 \times I_{F^2(RMS)}$

1.1 Characteristics (curves)

Figure 1: Average forward current versus ambient temperature (δ = 0.5, per diode)

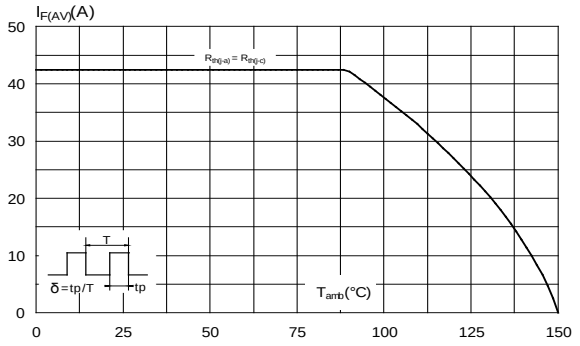

Figure 2: Relative variation of thermal impedance junction to case versus pulse duration

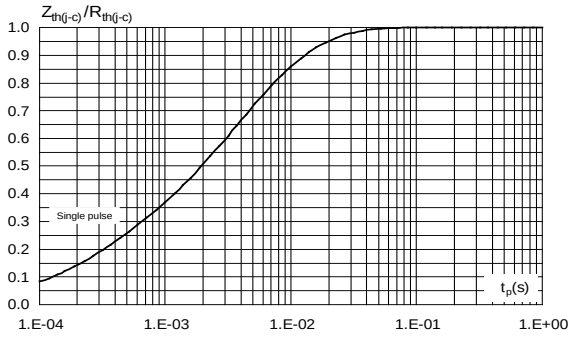

Figure 3: Reverse leakage current versus reverse voltage applied (typical values, per diode)

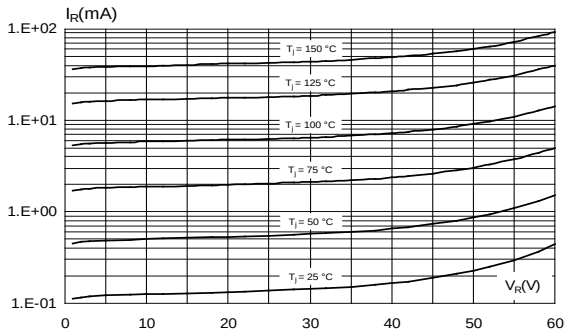

Figure 4: Junction capacitance versus reverse voltage applied (typical values, per diode)

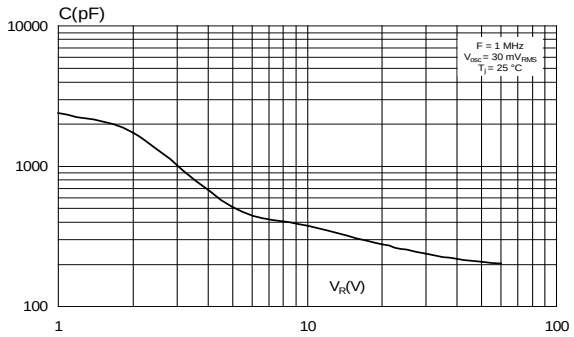

Figure 5: Forward voltage drop versus forward current (typical values, per diode)

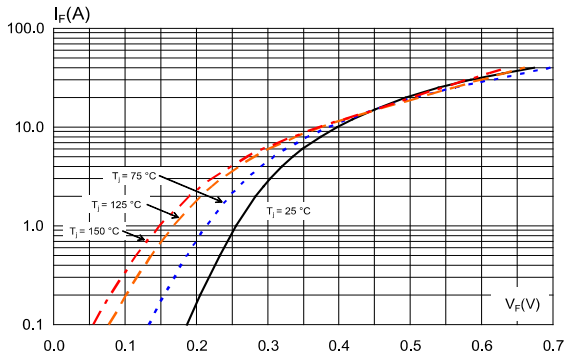

Figure 6: Forward voltage drop versus forward current (typical values, per diode)

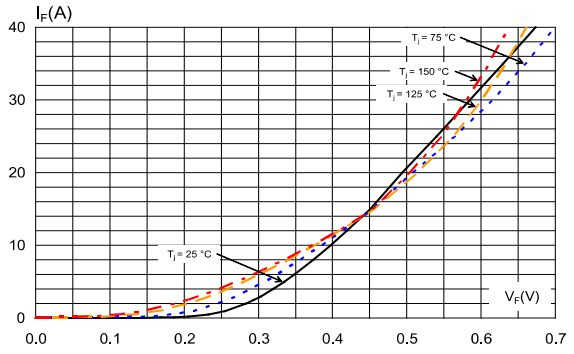

Figure 7: Thermal resistance junction to ambient versus copper surface under tab for D²PAK (typical values)

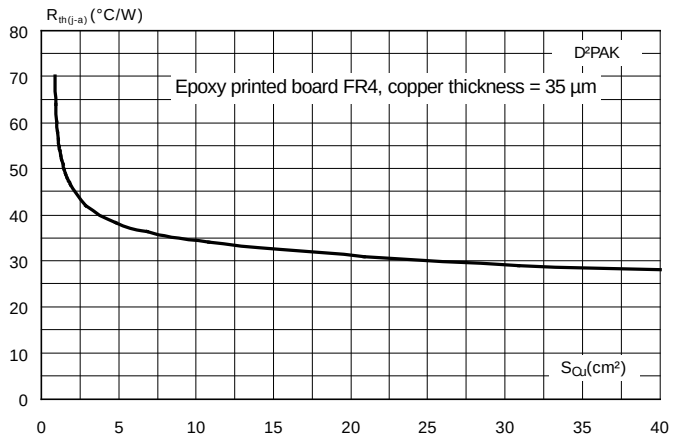

2 Package information

In order to meet environmental requirements, ST offers these devices in different grades of ECOPACK® packages, depending on their level of environmental compliance. ECOPACK® specifications, grade definitions and product status are available at: ***www.st.com***. ECOPACK® is an ST trademark.

- Cooling method: by conduction (C)
- Epoxy meets UL94,V0
- Recommended torque value: 0.55 N·m (for TO-220AB)
- Maximum torque value: 0.6 N·m (for TO-220AB)

2.1 TO-220AB package information

Figure 8: TO-220AB package outline

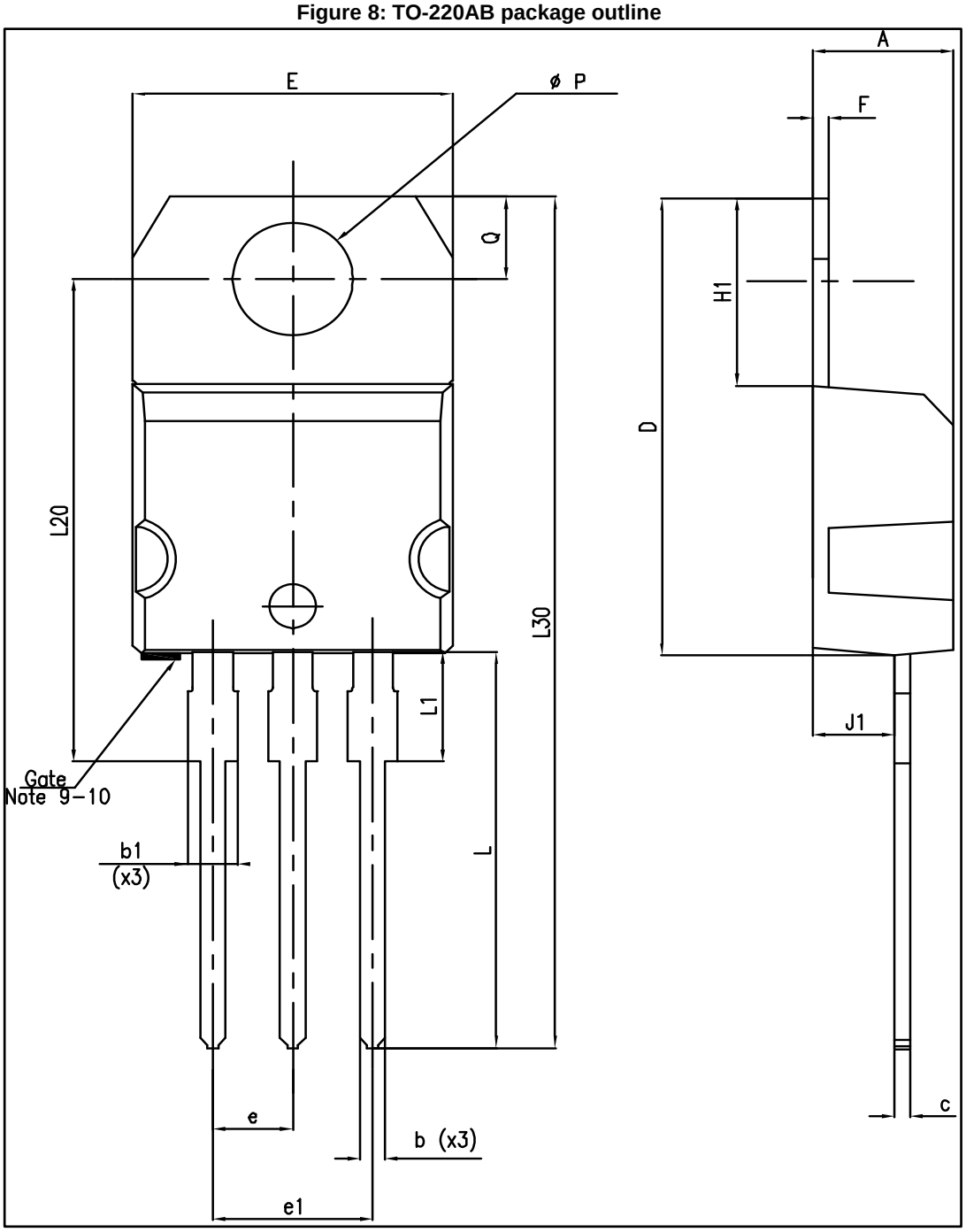

Table 5: TO-220AB package mechanical data

Ref.	Dimensions			
	Millimeters		Inches	
	Min.	Max.	Min.	Max.
A	4.40	4.60	0.173	0.181
b	0.61	0.88	0.024	0.035
b1	1.14	1.70	0.045	0.067
c	0.48	0.70	0.019	0.028
D	15.25	15.75	0.600	0.620
E	10.00	10.40	0.394	0.409
e	2.40	2.70	0.094	0.106
e1	4.95	5.15	0.195	0.203
F	0.51	0.60	0.020	0.024
J1	2.40	2.72	0.094	0.107
H1	6.20	6.60	0.244	0.256
L	13.00	14.00	0.512	0.551
L1	3.50	3.93	0.138	0.155
L20	16.40 typ.		0.646 typ.	
L30	28.90 typ.		1.138	
Ø P	3.75	3.85	0.148	0.156
Q	2.65	2.95	0.104	0.116

2.2 D²PAK package information

Figure 9: D²PAK package outline

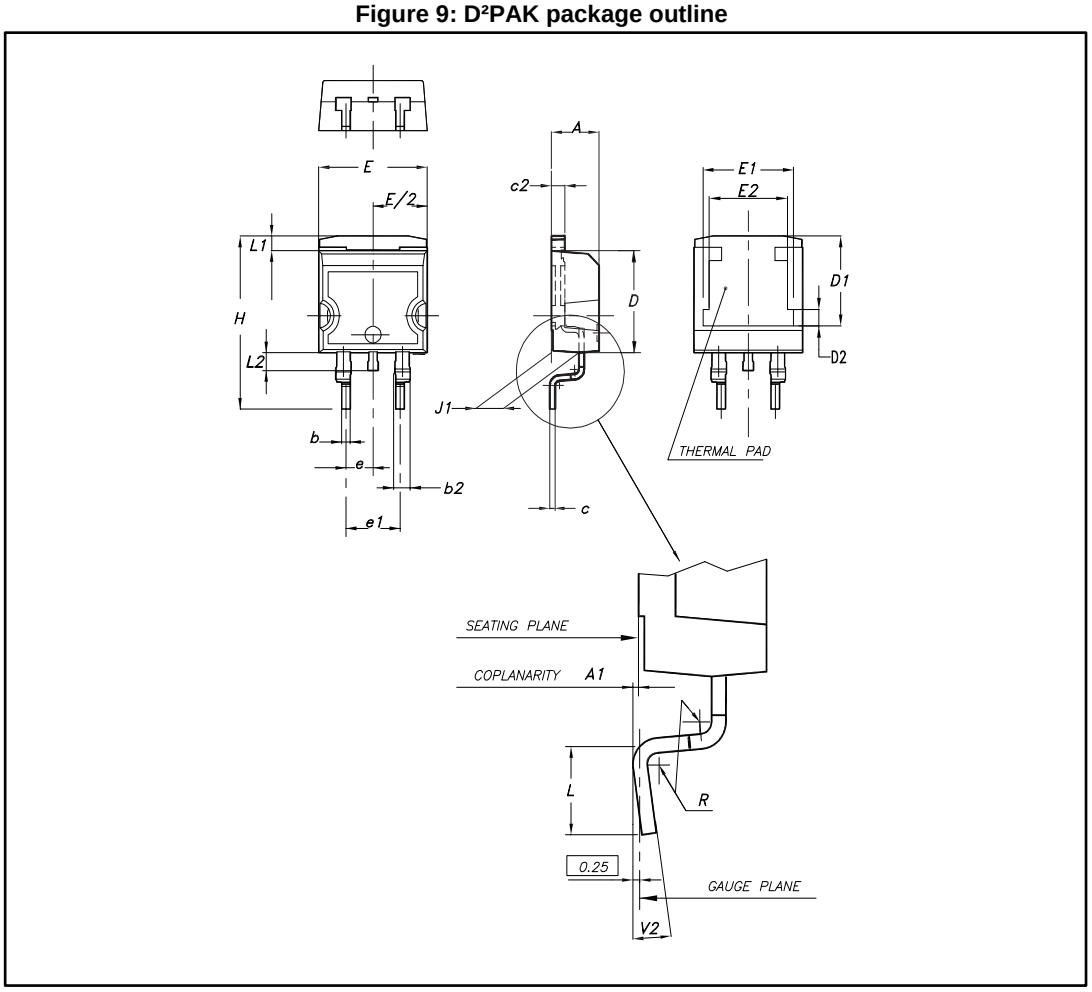

Table 6: D²PAK package mechanical data

Ref.	Dimensions					
	Millimeters			Inches		
	Min.	Typ.	Max.	Min.	Typ.	Max.
A	4.40		4.60	0.173		0.181
A1	0.03		0.23	0.001		0.009
b	0.70		0.93	0.028		0.037
b2	1.14		1.70	0.045		0.067
c	0.45		0.60	0.018		0.024
c2	1.23		1.36	0.048		0.053
D	8.95		9.35	0.352		0.368
D1	7.50	7.75	8.00	0.295	0.305	0.315
D2	1.10	1.30	1.50	0.043	0.051	0.060
E	10		10.40	0.394		0.409
E1	8.50	8.70	8.90	0.335	0.343	0.346
E2	6.85	7.05	7.25	0.266	0.278	0.282
e		2.54			0.100	
e1	4.88		5.28	0.190		0.205
H	15		15.85	0.591		0.624
J1	2.49		2.69	0.097		0.106
L	2.29		2.79	0.090		0.110
L1	1.27		1.40	0.049		0.055
L2	1.30		1.75	0.050		0.069
R		0.4			0.015	
V2	0°		8°	0°		8°

Figure 10: D²PAK recommended footprint (dimensions are in mm)

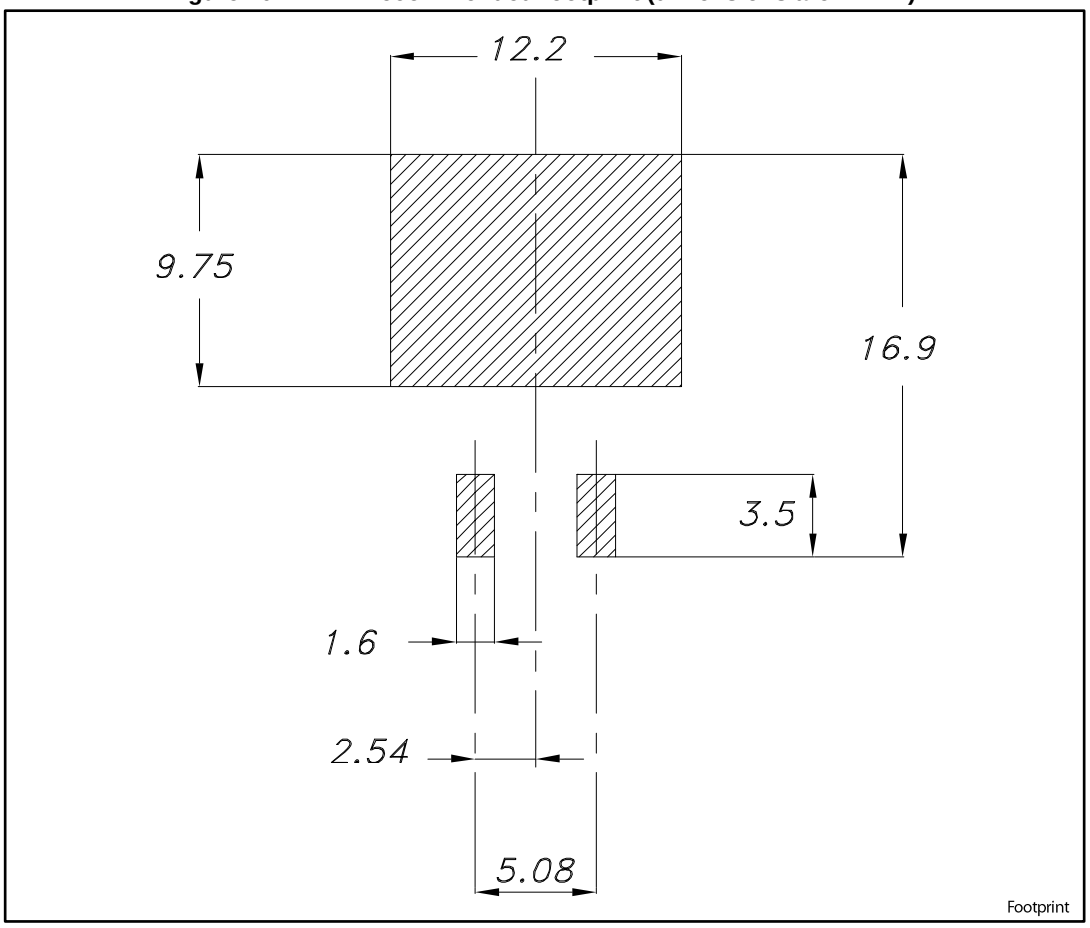

3 Ordering information

Table 7: Ordering information

Order code	Marking	Package	Weight	Base qty.	Delivery mode
FERD40L60CTS	FD40L60CTS	TO-220AB	1.38 g	50	Tube
FERD40L60CG-TR	FD40L60CG	D²PAK	1.43 g	1000	Tape and reel

4 Revision history

Table 8: Document revision history

Date	Revision	Changes
01-Sep-2017	1	Initial release.

IMPORTANT NOTICE – PLEASE READ CAREFULLY

STMicroelectronics NV and its subsidiaries ("ST") reserve the right to make changes, corrections, enhancements, modifications, and improvements to ST products and/or to this document at any time without notice. Purchasers should obtain the latest relevant information on ST products before placing orders. ST products are sold pursuant to ST's terms and conditions of sale in place at the time of order acknowledgement.

Purchasers are solely responsible for the choice, selection, and use of ST products and ST assumes no liability for application assistance or the design of Purchasers' products.

No license, express or implied, to any intellectual property right is granted by ST herein.

Resale of ST products with provisions different from the information set forth herein shall void any warranty granted by ST for such product.

ST and the ST logo are trademarks of ST. All other product or service names are the property of their respective owners.

Information in this document supersedes and replaces information previously supplied in any prior versions of this document.

© 2017 STMicroelectronics – All rights reserved

Общество с ограниченной ответственностью «МосЧип» ИНН 7719860671 / КПП 771901001
Адрес: 105318, г.Москва, ул.Щербаковская д.3, офис 1107

Данный компонент на территории Российской Федерации

Вы можете приобрести в компании MosChip.

Для оперативного оформления запроса Вам необходимо перейти по данной ссылке:

http://moschip.ru/get-element

Вы можете разместить у нас заказ для любого Вашего проекта, будь то серийное производство или разработка единичного прибора.

В нашем ассортименте представлены ведущие мировые производители активных и пассивных электронных компонентов.

Нашей специализацией является поставка электронной компонентной базы двойного назначения, продукции таких производителей как XILINX, Intel (ex.ALTERA), Vicor, Microchip, Texas Instruments, Analog Devices, Mini-Circuits, Amphenol, Glenair.

Сотрудничество с глобальными дистрибьюторами электронных компонентов, предоставляет возможность заказывать и получать с международных складов практически любой перечень компонентов в оптимальные для Вас сроки.

На всех этапах разработки и производства наши партнеры могут получить квалифицированную поддержку опытных инженеров.

Система менеджмента качества компании отвечает требованиям в соответствии с ГОСТ Р ИСО 9001, ГОСТ РВ 0015-002 и ЭС РД 009

Офис по работе с юридическими лицами:

105318, г.Москва, ул.Щербаковская д.3, офис 1107, 1118, ДЦ «Щербаковский»

Телефон: +7 495 668-12-70 (многоканальный)

Факс: +7 495 668-12-70 (доб.304)

E-mail: info@moschip.ru

Skype отдела продаж:
moschip.ru
moschip.ru_4
moschip.ru_6
moschip.ru_9