Isolated, Constant Current HV9971 LED Driver Demoboard

Board Layout and Connection Diagram

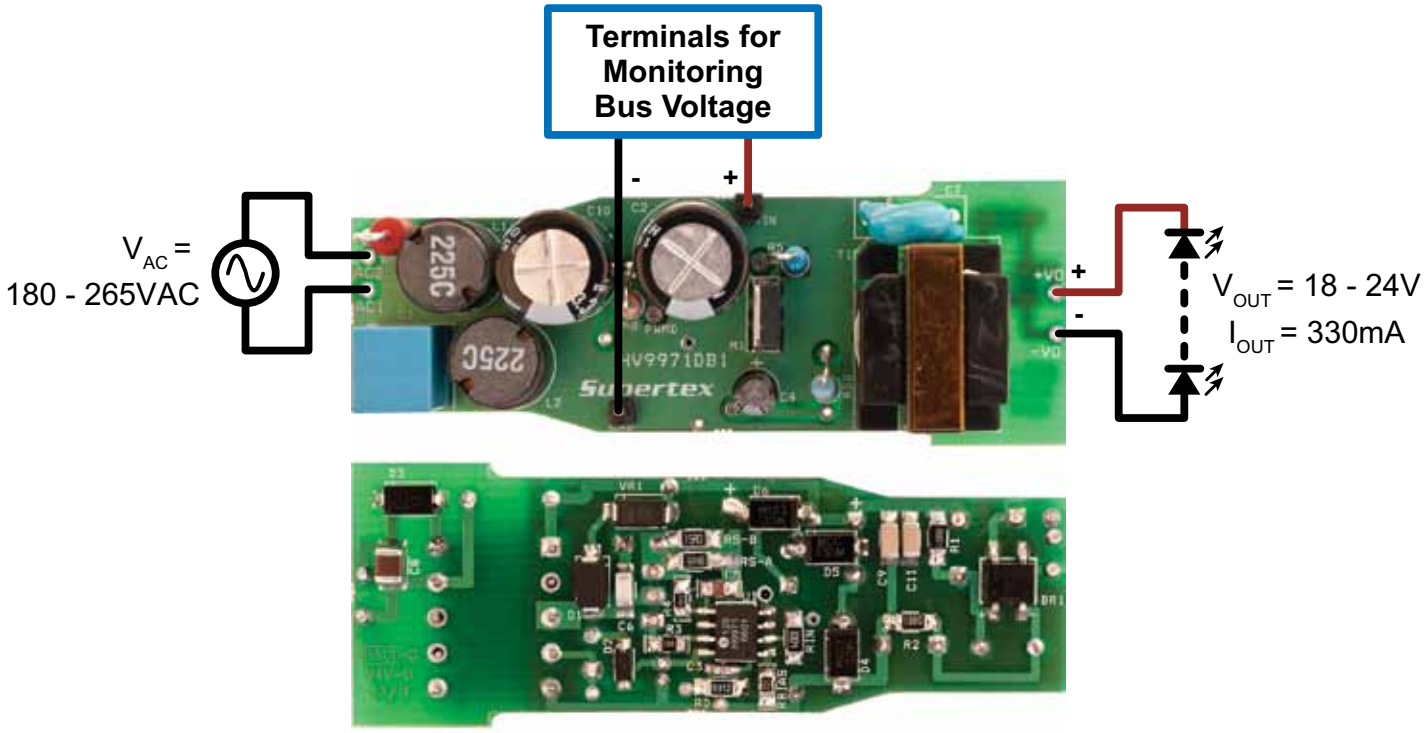

Connections

1. Input Voltage: Connect the AC input voltage between input terminals as shown.

2. LED String: Connect the LED strings between $+V_O$ and $-V_O$ as shown (anode of the string to $+V_O$ and cathode to $-V_O$).

3. DC Voltage: Use terminals either for measurement of the bus voltage or the DC voltage input

Specifications

Specification	Value
Input line voltage	180 – 265VAC
Output voltage	18 – 24V
Output current	330mA
Switching frequency	75 – 120kHz
Typical efficiency	82%@Low Line, 81%@High Line
Open LED protection	30V
Output short circuit protection	Hiccup
Power factor	≥82%

HV9971DB1 Schematic Diagram

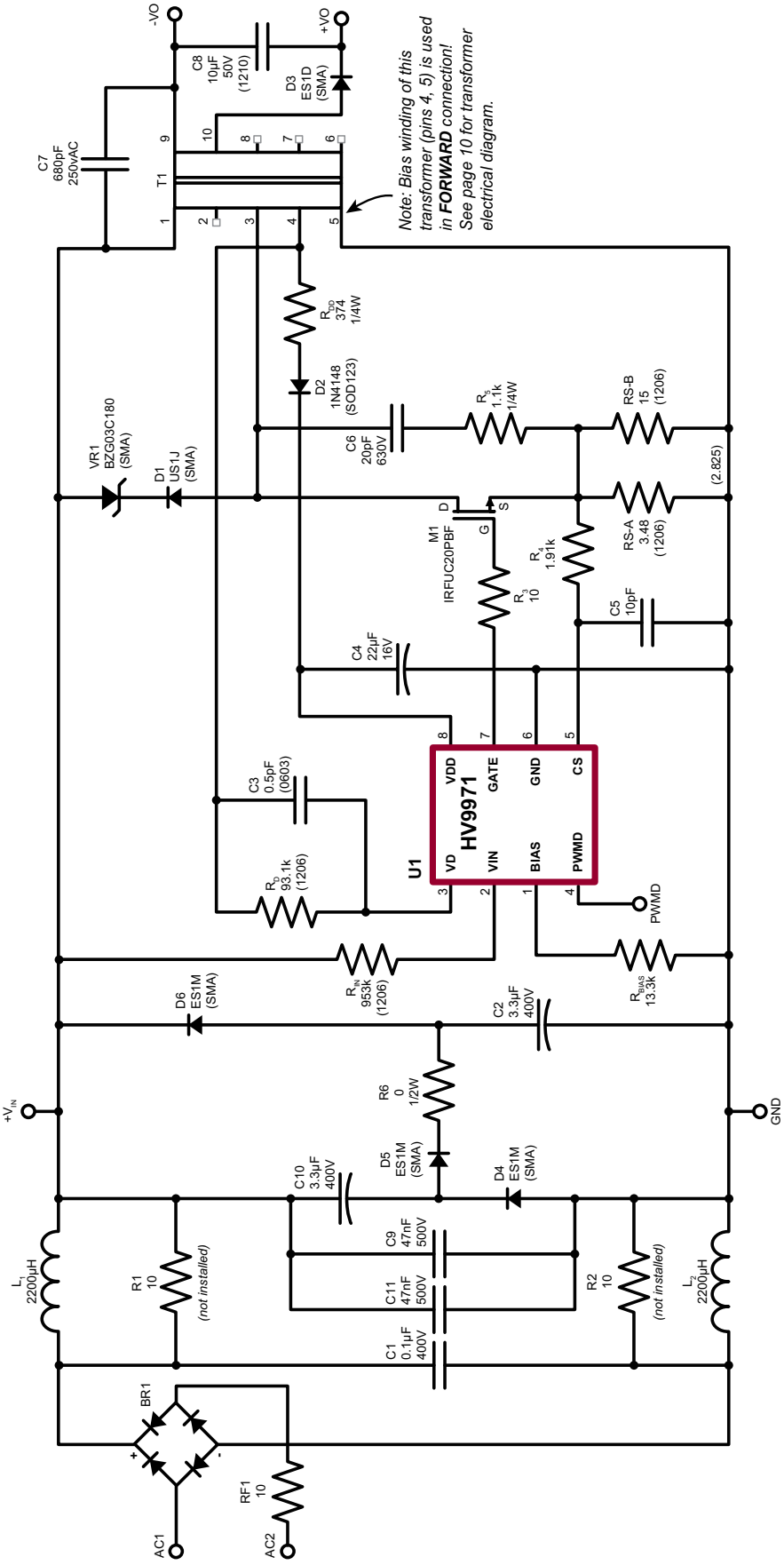

PCB Layout

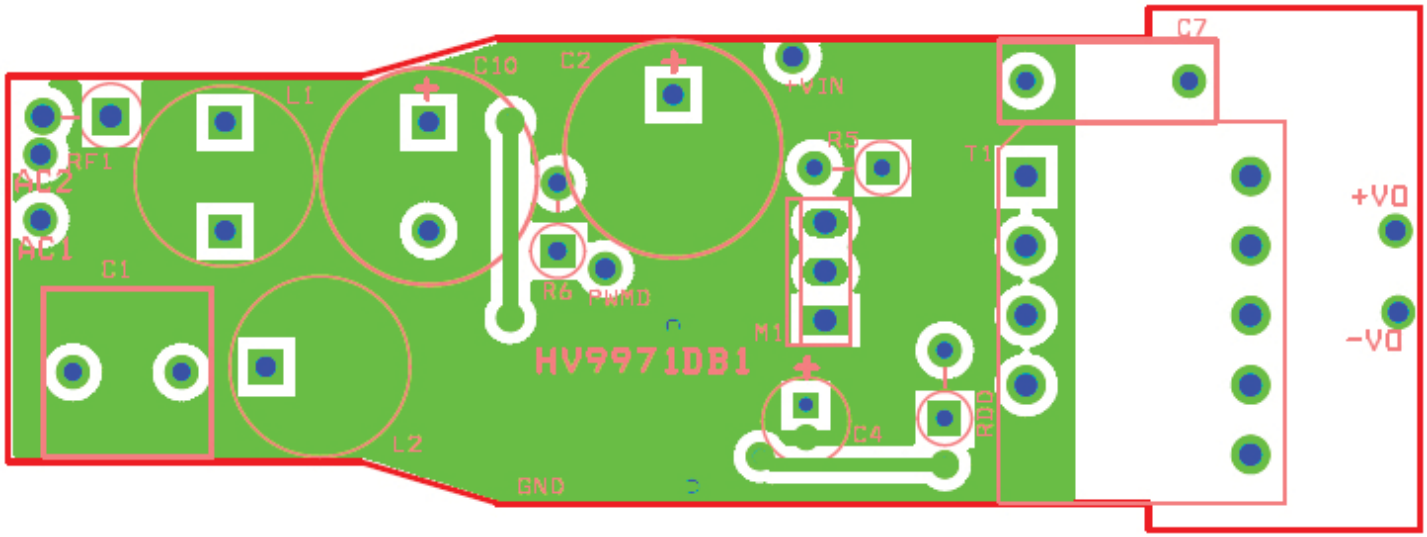

Through-Hole Component Side

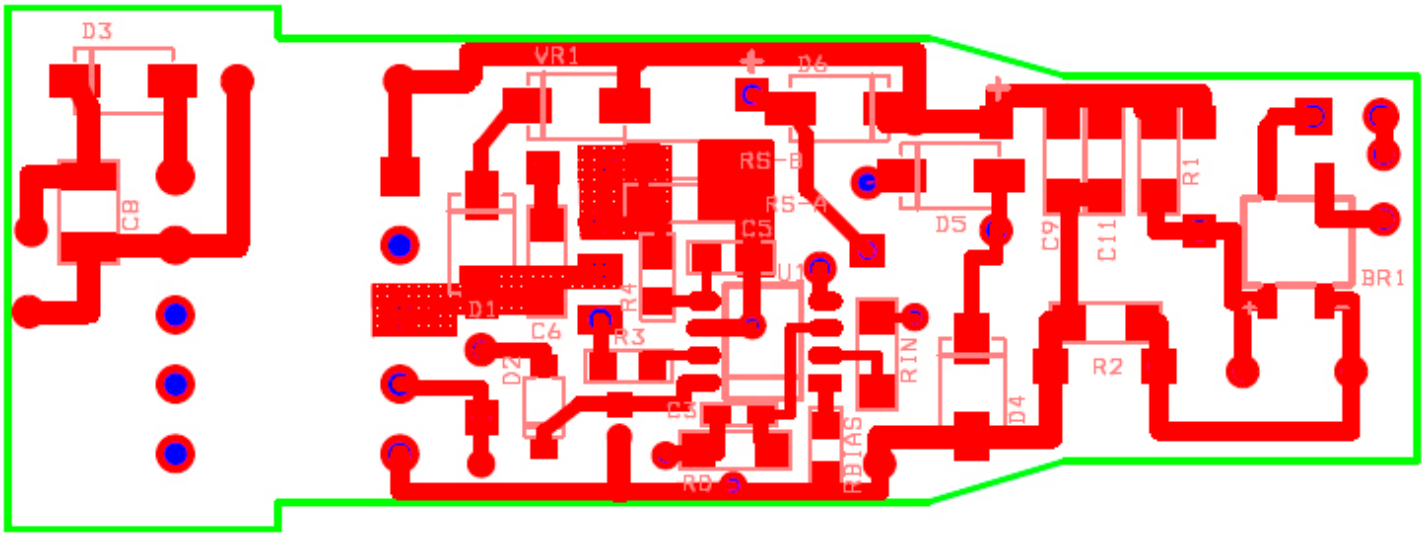

Solder Side

PCB Assembly Drawings

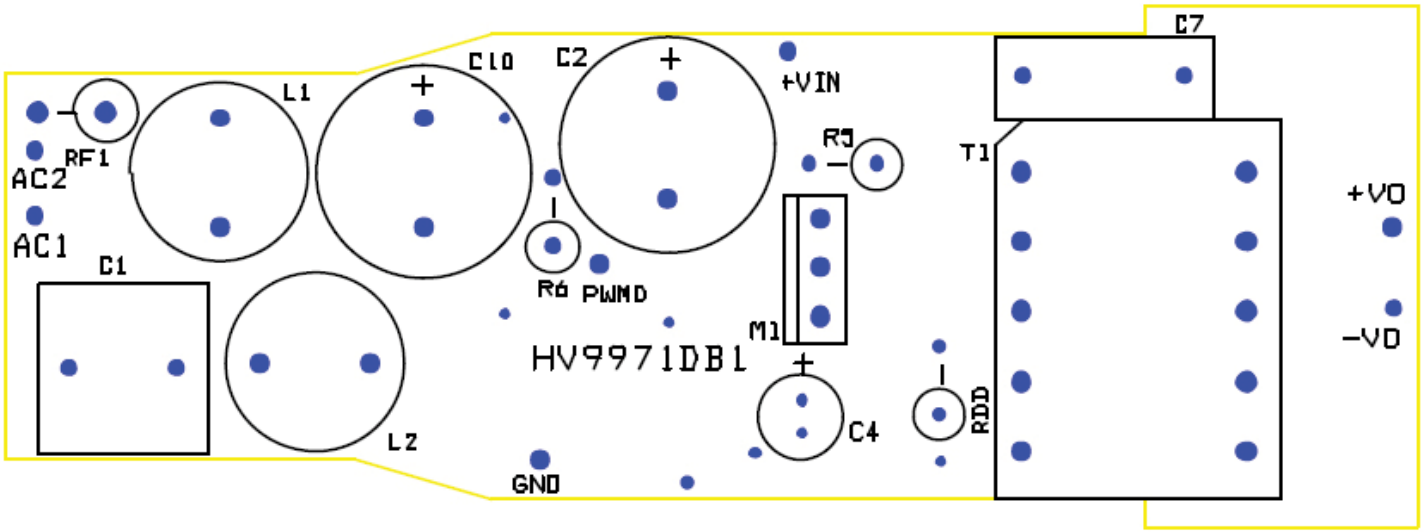

Through-Hole Component Side

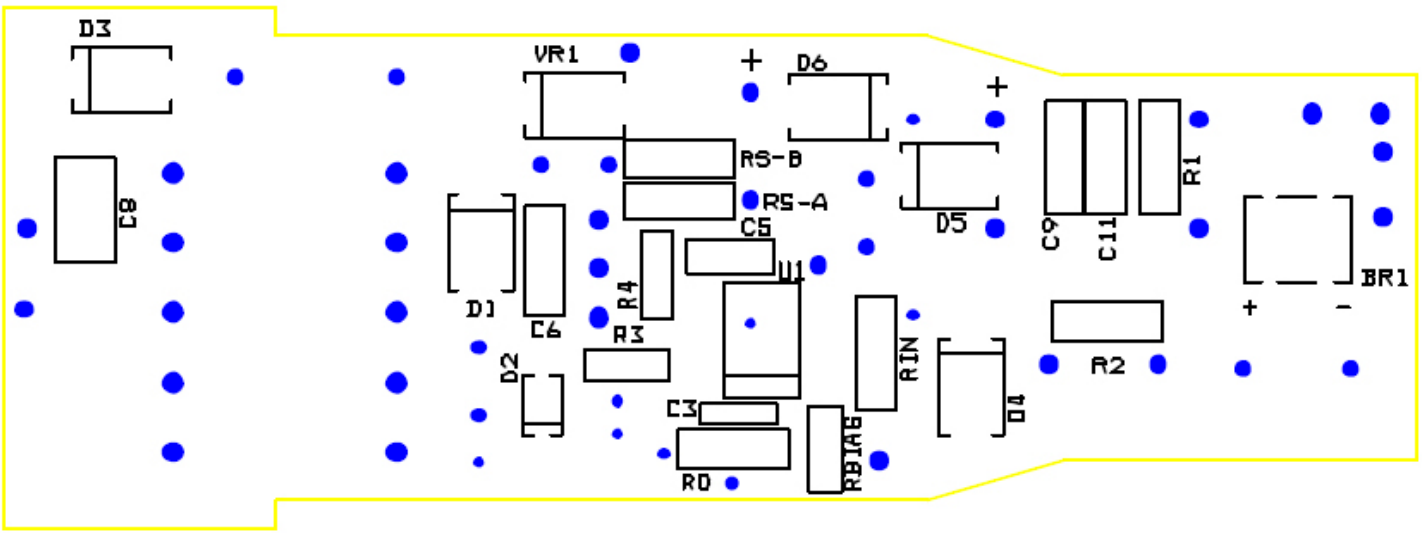

Solder Side

Typical Characteristics

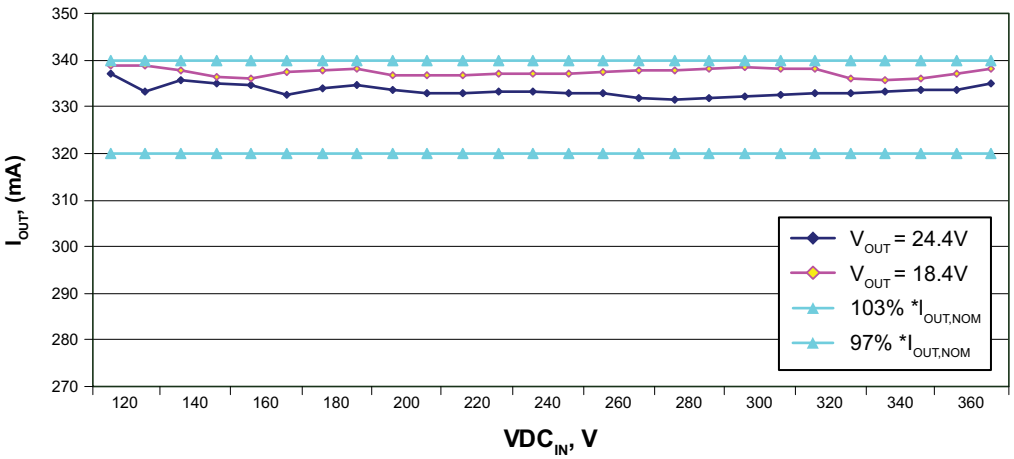

Figure 1. DC Line Regulation

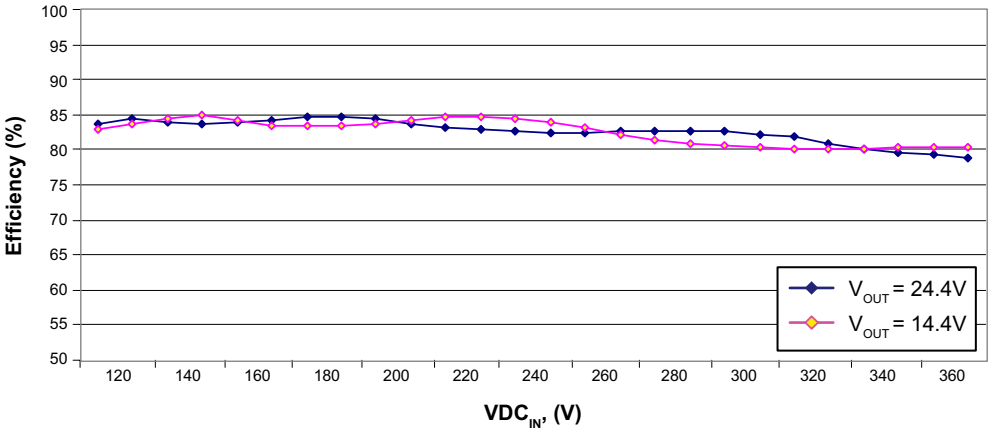

Figure 2. DC Efficiency @25°C

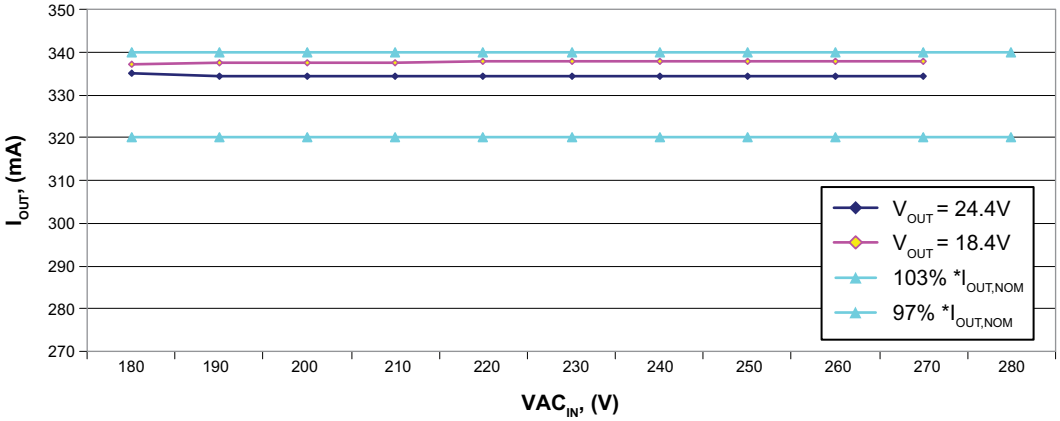

Figure 3. AC Line Regulation

Typical Characteristics *(cont.)*

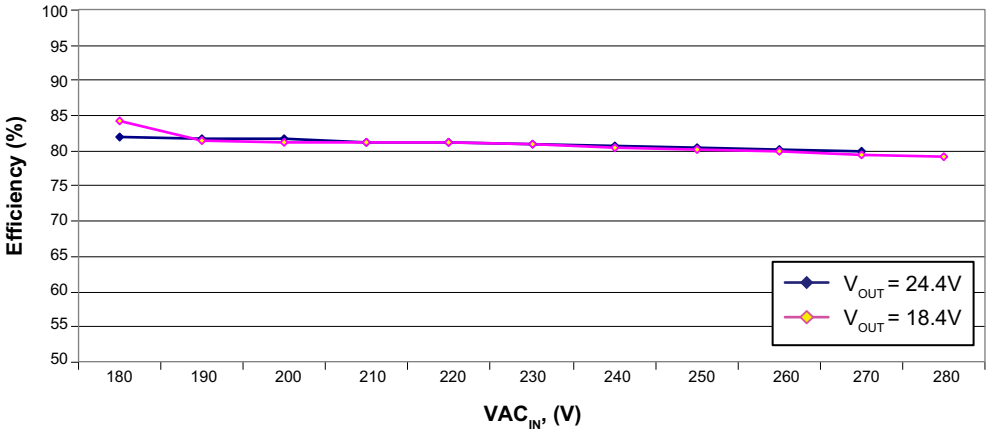

Figure 4. AC Efficiency @25°C

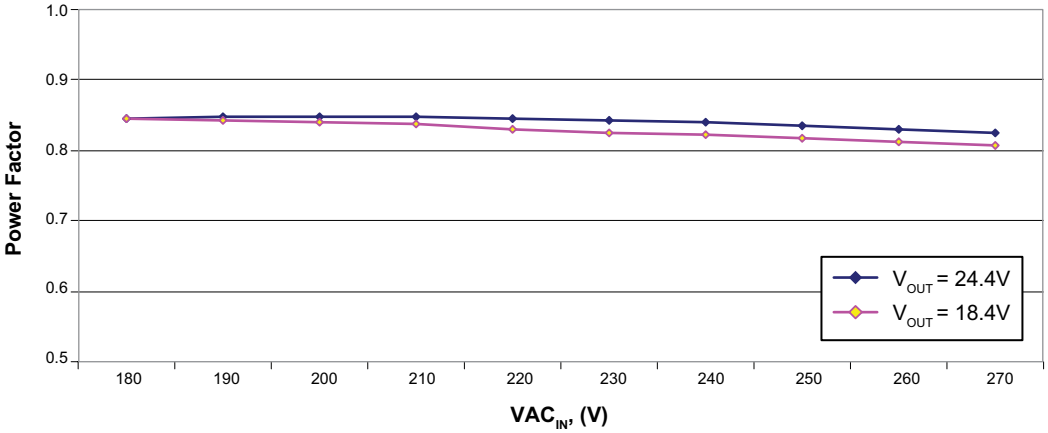

Figure 5. Power Factor

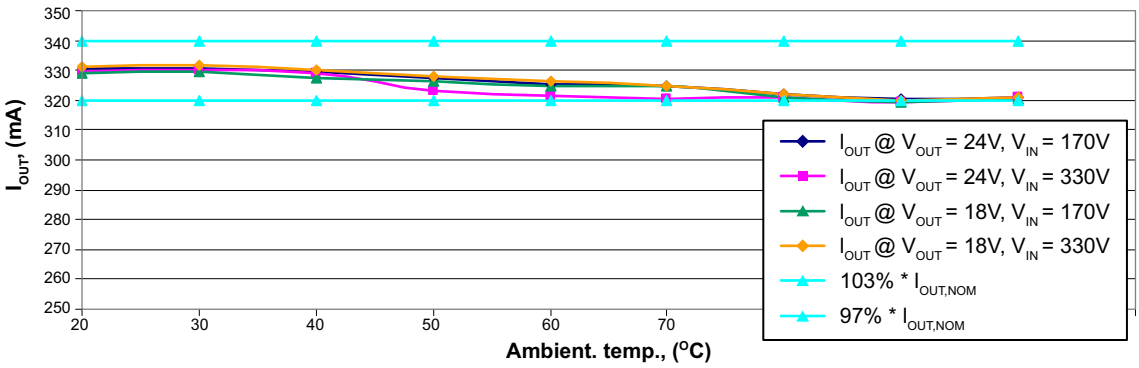

Figure 6. I_{OUT} Temperature Regulation

Typical Waveforms

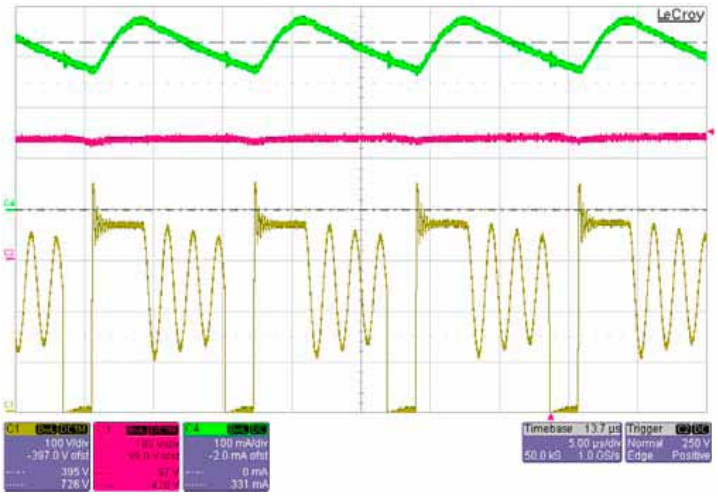

Figure 7. Output current (green trace, 100mA/div), drain voltage (yellow trace, 100V/div) and bus voltage (purple trace, 100V/div) @V_{LINE} = 230VAC

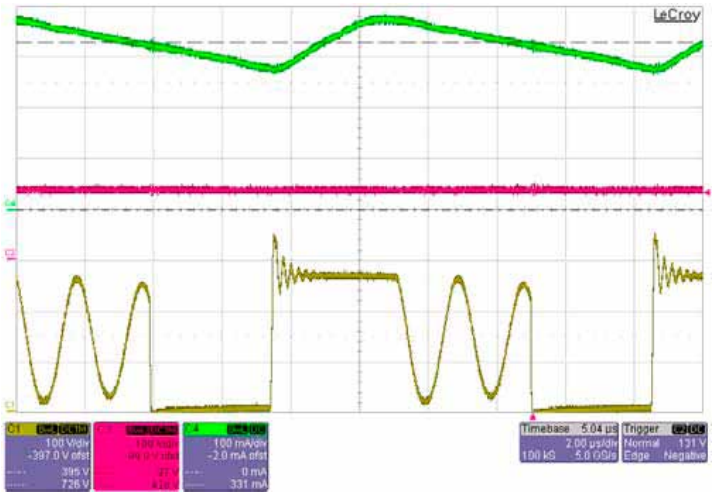

Figure 8. Output current (green trace, 100mA/div), drain voltage (yellow trace, 100V/div) and bus voltage (purple trace, 100V/div) @V_{LINE} = 230VAC

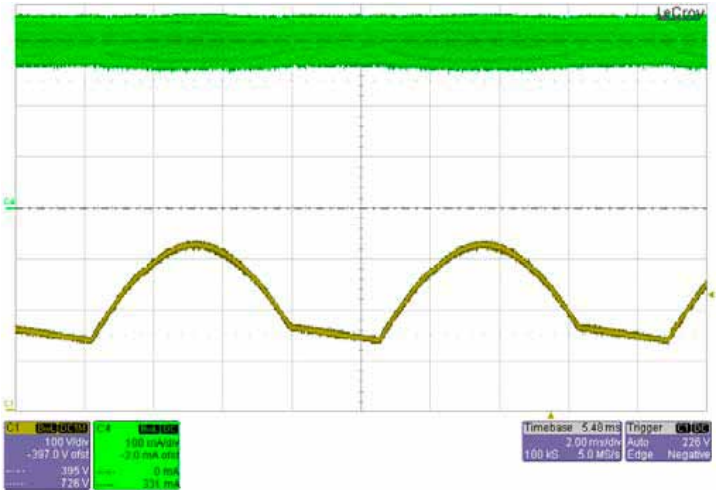

Figure 9. Output current (green trace, 100mA/div), and bus voltage (yellow trace, 100V/div) @V_{LINE} = 230VAC

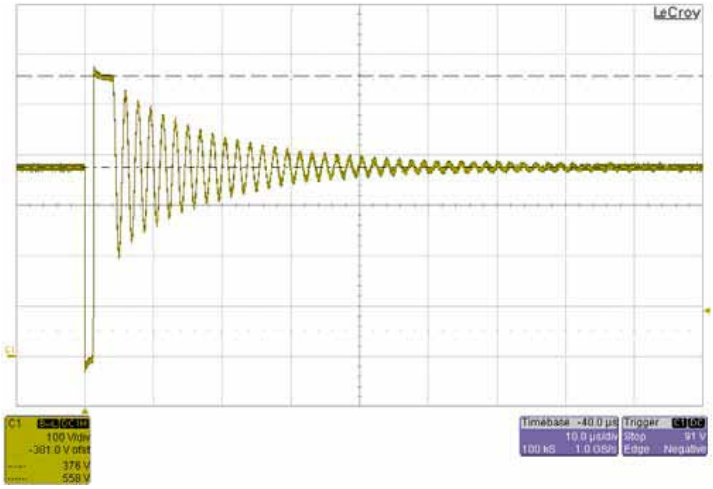

Figure 10. Drain voltage (yellow trace, 100V/div) @V_{IN} = 375VDC and LED open

Typical Waveforms *(cont.)*

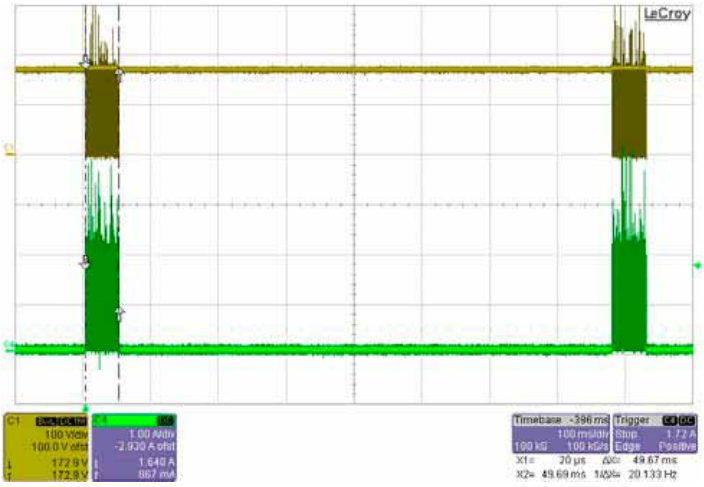

Figure 11. Output diode current (green trace, 1A/div), @V_{IN} = 170VDC and short across LED

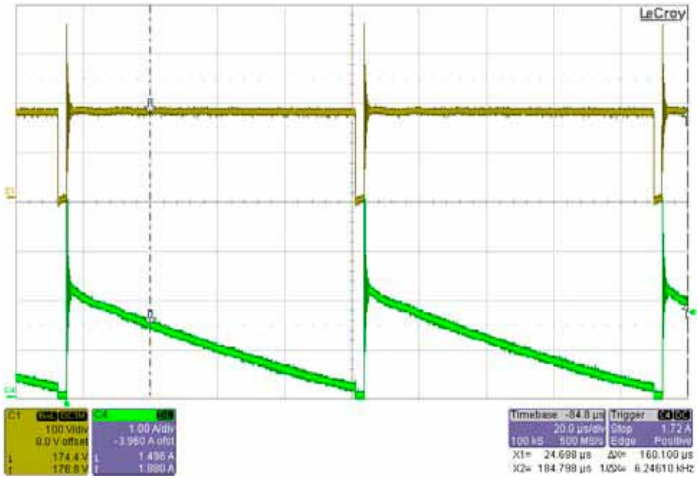

Figure 12. Output diode current (green trace, 1A/div), @V_{IN} = 170VDC and short across LED

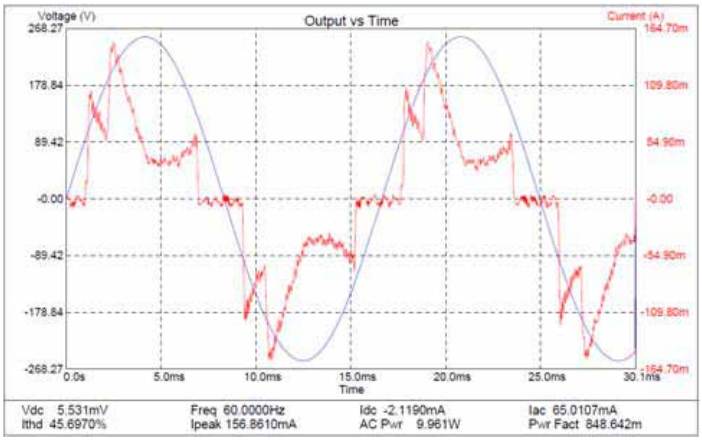

Figure 13. Line voltage and line current @VAC = 180V

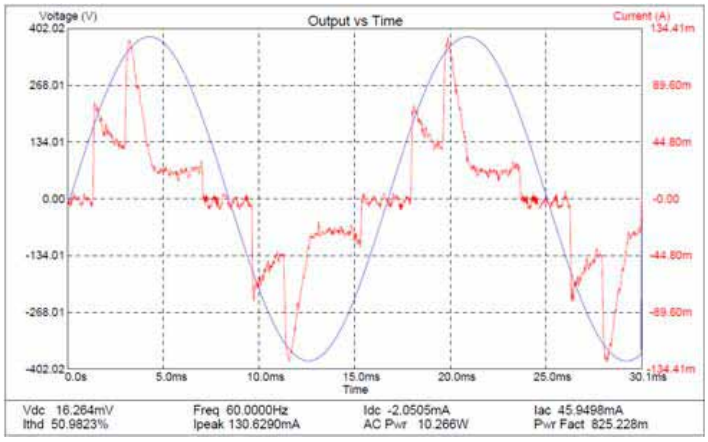

Figure 14. Line voltage and line current @VAC = 270V

Bill of Materials

#	Quan	Ref. Des.	Description	Package	Manufacturer	Manufacturer Part #
1	1	BR1	Rect bridge GP 600V 0.8A	Mini-Dip	Diodes inc.	HD06-T
2	1	C1	0.1µF 400V radial capacitor	Thru-hole	Epcos	B32529E6104J000
3	2	C2, C10	3.3µF 400V elect vy radial capacitor	Thru-hole	Nichicon	UVZ2G3R3MPD
4	1	C3	0.5pF 50V ceramic chip capacitor	SMT0603	Yageo	CC0603CRNP09BNR50
5	1	C4	22µF 16V alum elect capacitor	Thru-hole	Panasonic ECG	ECE-A1CKA220
6	1	C5	10pF 50V ceramic chip capacitor	SMT0805	Yageo	CC0805JRNP09BRN100
7	1	C6	20pF 630V ceramic chip capacitor	SMT1206	Kemet	C1206C200JBRACTU
8	1	C7	680 pF 250VAC capacitor	Thru-hole	Murata	DE2B3KH681KA3B
9	1	C8	10µF 50V ceramic chip capacitor	SMT1210	Taiyo Yuden	UMK325C7106MM-T
10	2	C9, C10	47nF 500 ceramic chip capacitor	SMT1206	Vishay	VJ1206Y473KXEAT5Z
11	1	D1	Diode ultra fast switch 600V 1A	SMA	Diodes inc.	US1J-13-F
12	1	D2	Diode switch 75V 400mW	SOD123	Diodes inc.	1N4148W-7-F
13	1	D3	Diode fast rec 200V 1A	SMA	Diodes inc.	ES1D-13-F
14	3	D4, D5, D6	Diode fast rec 1000V 1A	SMA	Micro Comm	ES1M-TP
15	2	L1, L2	2.2mH 0.20A inductor	SMT	Murata	13R225C
16	1	M1	600V 2A N-channel MOSFET	I-PAK	Vishay	IRFUC20PBF
17	1	R_{DD}	374Ω 1% resistor	1/4W Thru-hole	Any	---
18	1	R_{IN}	953kΩ 1% resistor	SMT1206	Any	---
19	1	R_{D}	95.3kΩ 1% resistor	SMT1206	Any	---
20	1	R_{BIAS}	13.3kΩ 1% resistor	SMT0805	Any	---
21	1	R_{S-A}	3.48Ω 1% resistor	SMT1206	Any	(3.48//15) = 2.825
22	1	R_{S-B}	15.0Ω 1% resistor	SMT1206	Any	(3.48//15) = 2.825
23	1	R_{F1}	10Ω 5% 2W MF fusible resistor	1/4W Thru-hole	Vishay	---
24	2	R1, R2	Not Installed	SMT1206	Any	---
25	1	R3	10Ω 1% resistor	SMT0805	Any	---
26	1	R4	1.91kΩ 1% resistor	SMT0805	Any	---
27	1	R5	1.1kΩ 1% resistor	1/4W Thru-hole	Any	---
28	1	R6	0Ω	Jumper Wire	-	---
29	1	T1	Custom transformer	Thru-hole	Any	---
30	1	U1	LED Driver IC	SOIC-8	Supertex	HV9971LG-G
31	1	VR1	Diode Zener 180V 600W 5%	SMA	Vishay	BZG03C180TR

Flyback Transformer Specifications

Transformer Electrical Diagram

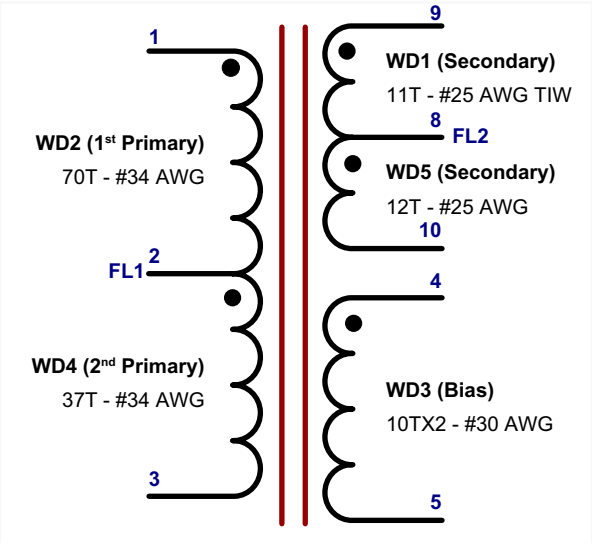

Transformer Build Diagram

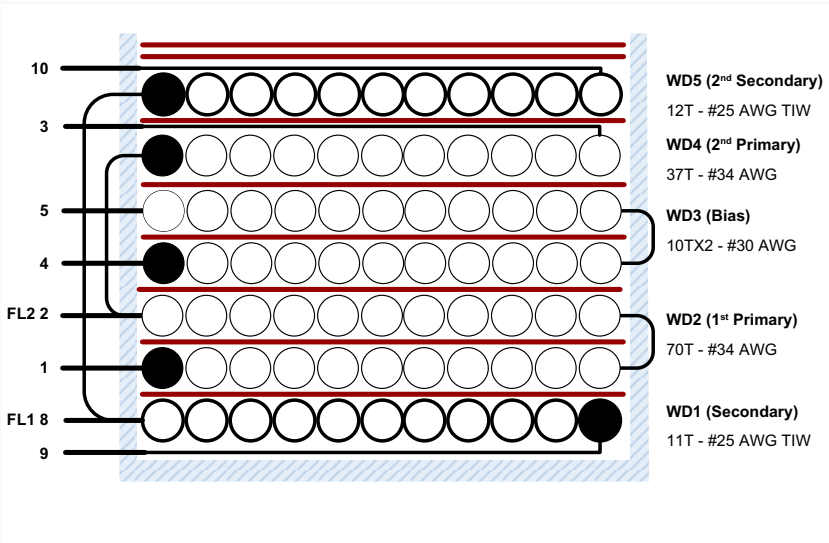

Transformer Electrical Specifications

Electrical strength	From pins 1-3 to pins 8-10 1second, AC 60Hz	3000VAC
Primary inductance	Pins 1, 3 all other windings open, at 100kHz	916µH, ±10%
Resonant frequency	Pins 1, 3 all other windings open	750KHz (min.)
Primary leakage inductance	Pins 1, 3, leads 9, 10 shorted	18µH (max.)

Transformer Bill of Materials

Item	Description
1	Core: RENCO E16/8/5 (or equivalent), Al = 80nH/T^2
2	Bobbin: E/16/8/5 vertical, 10pin or equivalent
3	Triple insulated wire: #25 AWG
4	Magnet wire: #34 AWG
5	Magnet wire: #30 AWG
6	Tape: 3M 1298 Polyester Film, 8mm wide, 2.0mils thick or equivalent
7	Tape: 3M 1298 Polyester Film, 4.7mm wide, 2.0mils thick or equivalent
8	Varnish: Dolph BC-359 or equivalent

Supertex inc. does not recommend the use of its products in life support applications, and will not knowingly sell them for use in such applications unless it receives an adequate "product liability indemnification insurance agreement." Supertex inc. does not assume responsibility for use of devices described, and limits its liability to the replacement of the devices determined defective due to workmanship. No responsibility is assumed for possible omissions and inaccuracies. Circuitry and specifications are subject to change without notice. For the latest product specifications refer to the Supertex inc. (website: http//www.supertex.com)

©2013 Supertex inc. All rights reserved. Unauthorized use or reproduction is prohibited.

Supertex inc.
1235 Bordeaux Drive, Sunnyvale, CA 94089
Tel: 408-222-8888
www.supertex.com

Общество с ограниченной ответственностью «МосЧип» ИНН 7719860671 / КПП 771901001
Адрес: 105318, г.Москва, ул.Щербаковская д.3, офис 1107

Данный компонент на территории Российской Федерации

Вы можете приобрести в компании MosChip.

Для оперативного оформления запроса Вам необходимо перейти по данной ссылке:

http://moschip.ru/get-element

Вы можете разместить у нас заказ для любого Вашего проекта, будь то серийное производство или разработка единичного прибора.

В нашем ассортименте представлены ведущие мировые производители активных и пассивных электронных компонентов.

Нашей специализацией является поставка электронной компонентной базы двойного назначения, продукции таких производителей как XILINX, Intel (ex.ALTERA), Vicor, Microchip, Texas Instruments, Analog Devices, Mini-Circuits, Amphenol, Glenair.

Сотрудничество с глобальными дистрибьюторами электронных компонентов, предоставляет возможность заказывать и получать с международных складов практически любой перечень компонентов в оптимальные для Вас сроки.

На всех этапах разработки и производства наши партнеры могут получить квалифицированную поддержку опытных инженеров.

Система менеджмента качества компании отвечает требованиям в соответствии с ГОСТ Р ИСО 9001, ГОСТ РВ 0015-002 и ЭС РД 009

Офис по работе с юридическими лицами:

105318, г.Москва, ул.Щербаковская д.3, офис 1107, 1118, ДЦ «Щербаковский»

Телефон: +7 495 668-12-70 (многоканальный)

Факс: +7 495 668-12-70 (доб.304)

E-mail: info@moschip.ru

Skype отдела продаж:
moschip.ru
moschip.ru_4
moschip.ru_6
moschip.ru_9