3.0kW Dual LLC Evaluation Board

EVAL_3KW_2LLC_P7_47
TO247

Di Domenico Francesco (IFAT PMM ACDC AE)
Zechner Florian (IFAT PMM ACDC AE)

Table of Contents

1 General Description

2 Efficiency Results

3 Design Concept

Copyright © Infineon Technologies AG 2017. All rights reserved.

Table of Contents

1 General Description

2 Efficiency Results

3 Design Concept

Copyright © Infineon Technologies AG 2017. All rights reserved.

General

Description:

The "EVAL_3KW_2LLC_P7_47" - Evaluation Board shows how to design a dual phase LLC system solution of a Server SMPS with the target to meet **80+ Titanium Standard** efficiency requirements. On this purpose there has been applied latest CoolMOS™ technology IPP60R037P7 600V Power MOSFET on the primary side and OptiMOS™ Low Voltage Power MOSFET in SuperSO8 BSC093N15NS5 in the synchronous rectification secondary stage, in combination with QR CoolSET™ ICE2QR2280Z, 1EDI60N12AF EiceDRIVER™ high voltage, high speed driver ICs for HV MOSFETs, Low Side Gate Driver 2EDN7524R for SR MOSFETs and digital LLC Controller XMC4400.

Summary of Features:

- Output voltage: 44 – 58 VDC
- Output current max: 55A
- Peak efficiency @ 50% load > 98.4%
- Efficiency @ 10% load > 97%

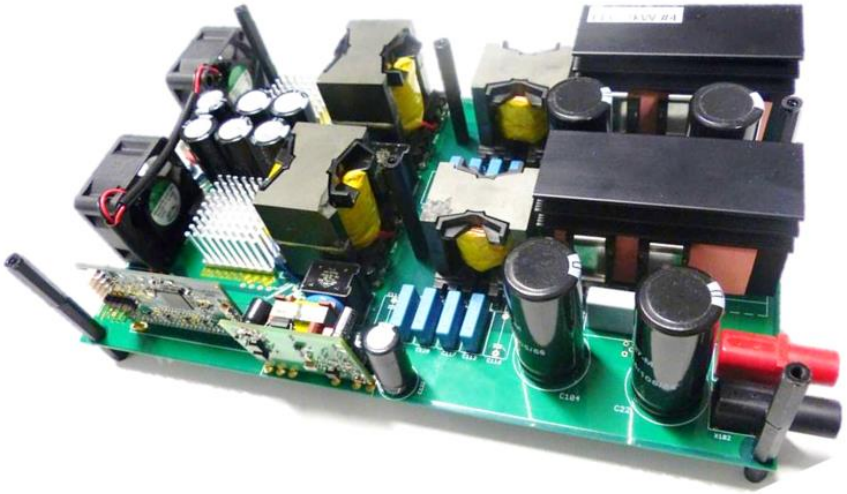

The following variants are available:

- EVAL_3kW_2LLC_P7 version with CoolMOS™ P7 **TO-247**, IPW60R037P7

  Ordercode: EVAL_3KW_2LLC_P7_47

Copyright © Infineon Technologies AG 2017. All rights reserved.

Example of System Understanding: Infineon Demo Solution for Titanium HV DC/DC stage

Half Bridge LLC with synchronous rectification in center tap configuration	
V_{in}	350 – 400V_{DC}
V_{in_nom}	380V_{DC}
V_{out}	44 - 58 V_{DC}
I_{out}	55 A
P_o	3 kW
C_r	66 nF
L_r	12 uH
L_m	62 uH

Primary HV MOSFETs

- **CoolMOS™ IPP60R037P7**
  Reduced Gate Charge (Q_g)
- Reduced E_{off}
- High body diode ruggedness

SR MOSFETs

- **OptiMOS™ BSC093N15NS5**
- New generation
- Best FOM $R_{DS(on)}$ x Q_g
- Best FOM $R_{DS(on)}$ x Q_{oss}

Transformer
SP-PQ 40/40 core

Resonant inductor
SP-PQ 35/35 core

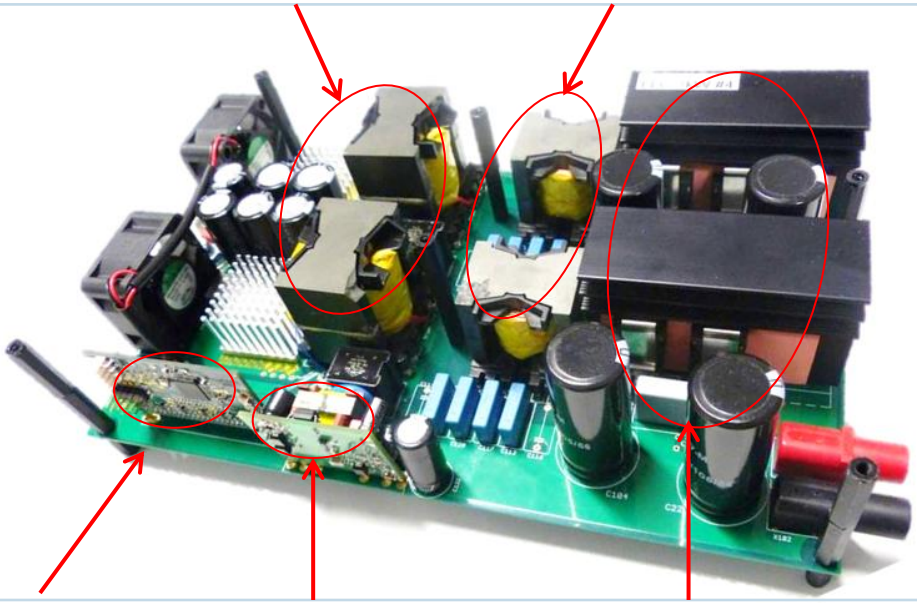

LLC controller
Digital XMC4400

Bias QR Flyback controller
ICE2QR2280Z

HV MOSFETs
IPW60R037P7 TO-247

Copyright © Infineon Technologies AG 2017. All rights reserved.

Control Board Digital

Infineon`s solution to control the 3kW dual phase LLC Evaluation Board

Digital

XMC4400-F64K512 AB

Summary of Features:

- ARM® Cortex™-M4, 120MHz, incl. single cycle DSP MAC and floating point unit (FPU)
- 8-channel DMA + dedicated DMAs for USB and Ethernet
- USB 2.0 full-speed on-the-go
- CPU Frequency: 120MHz
- eFlash: 512kB including hardware ECC
- 80kB SRAM
- Package: PG-LQFP-64

Target Applications:

Motor control

- Position detection
- IO devices
- HMI
- Solar inverters
- SMPS
- Sense & control systems
- PLC
- UPS
- Light networks

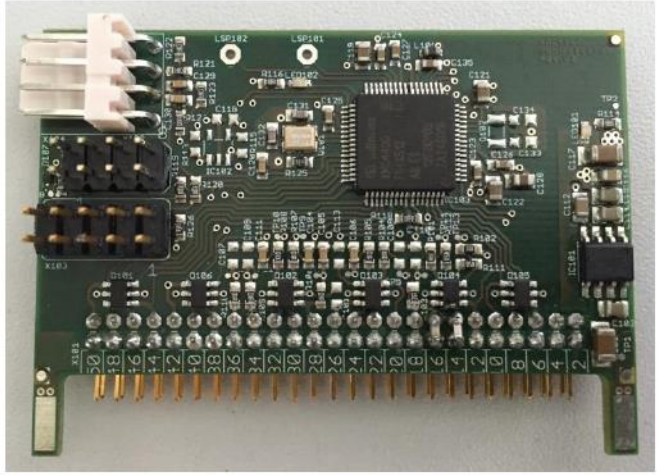

Copyright © Infineon Technologies AG 2017. All rights reserved.

Main Power Board Schematic_1

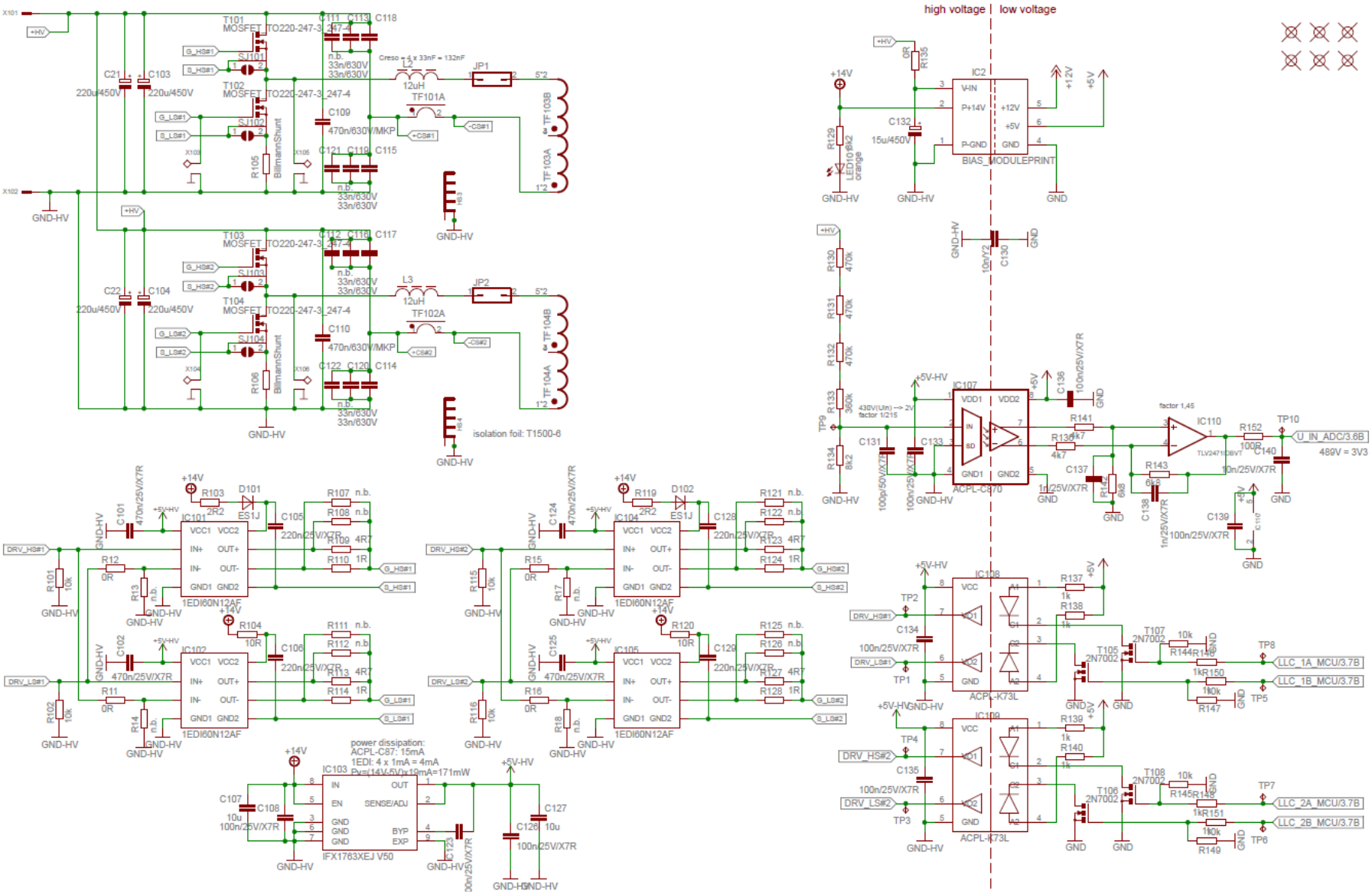

Copyright © Infineon Technologies AG 2017. All rights reserved.

Main Power Board Schematic_2

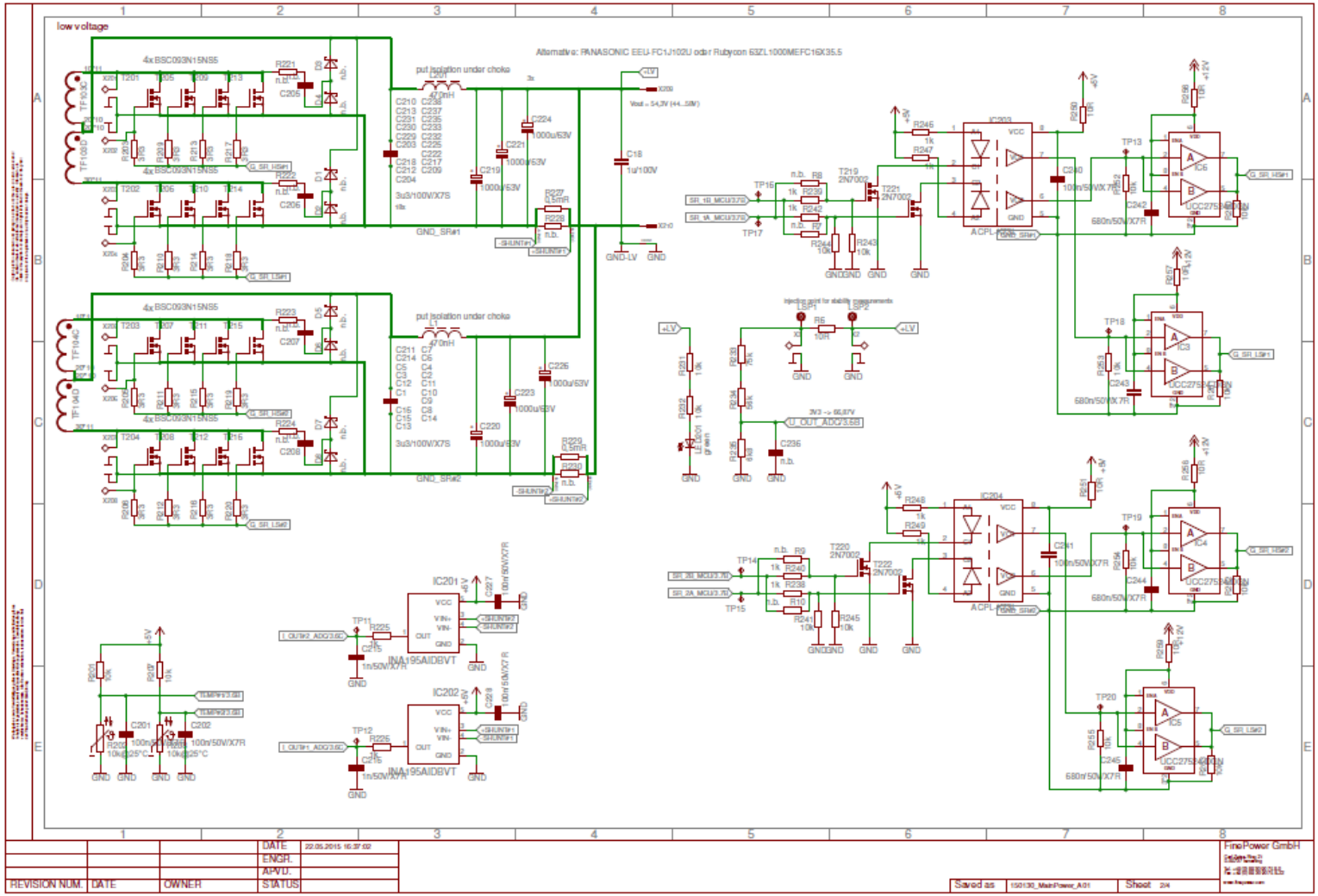

Copyright © Infineon Technologies AG 2017. All rights reserved.

Digital Control Board Schematic

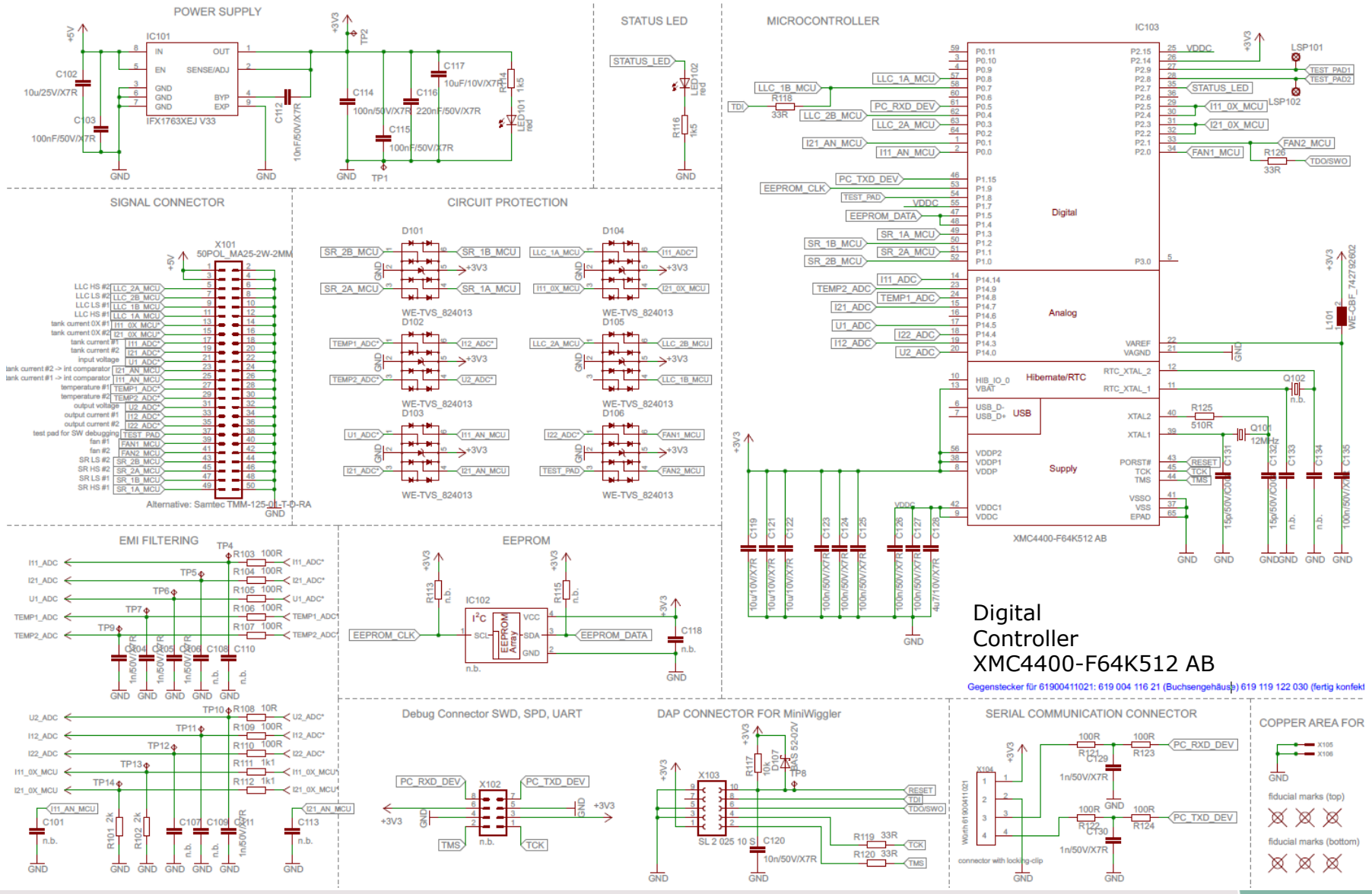

Copyright © Infineon Technologies AG 2017. All rights reserved.

Bias Board Schematic

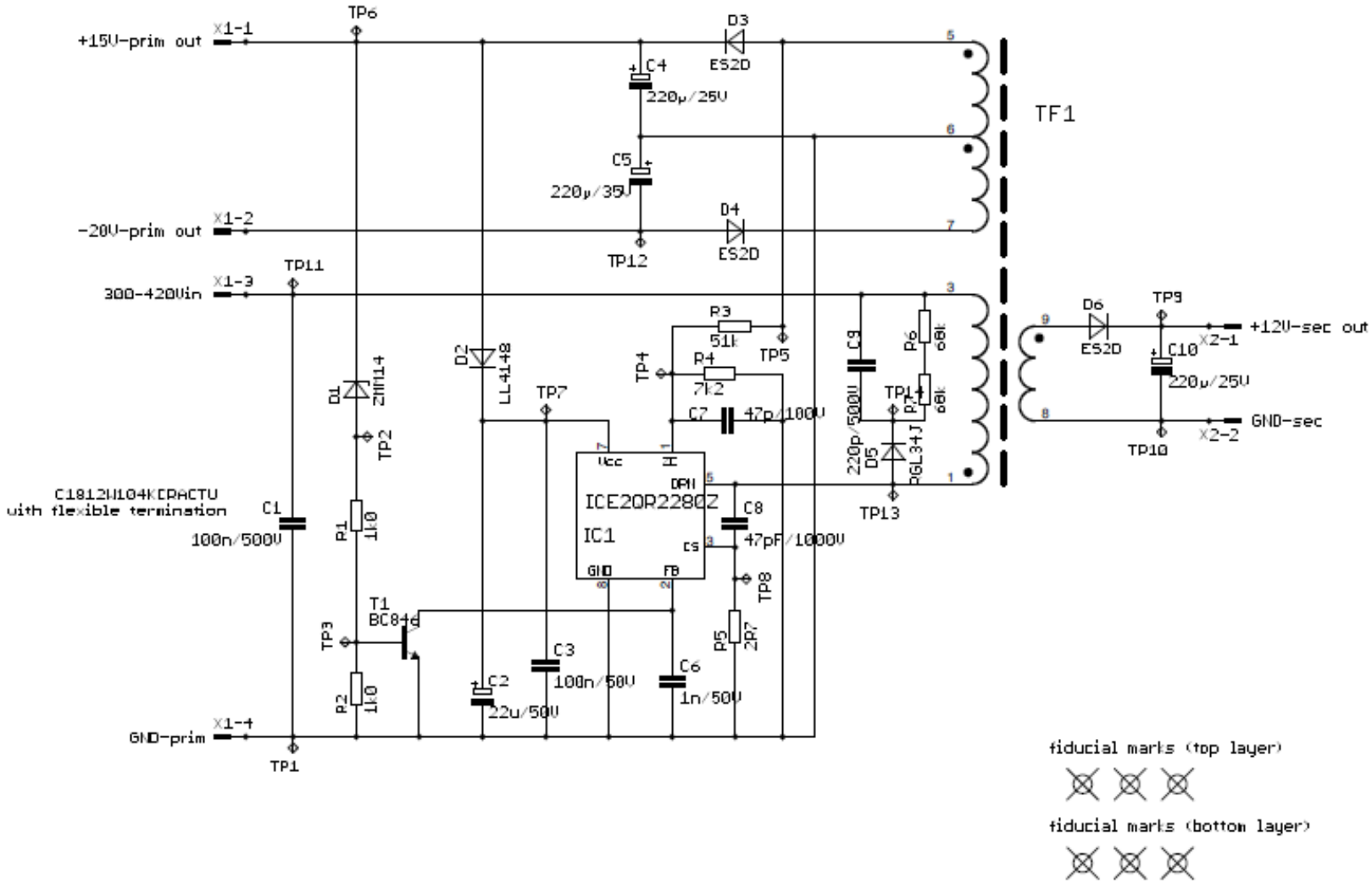

Copyright © Infineon Technologies AG 2017. All rights reserved.

Connection instruction

Copyright © Infineon Technologies AG 2017. All rights reserved.

Table of Contents

1 General Description

2 Efficiency Results

3 Design Concept

Copyright © Infineon Technologies AG 2017. All rights reserved.

Automated Efficiency Measurement

Combination of converter design (resonant tank, transformer) and proper HV device election

Proper selection of SR LV device and secondary side design

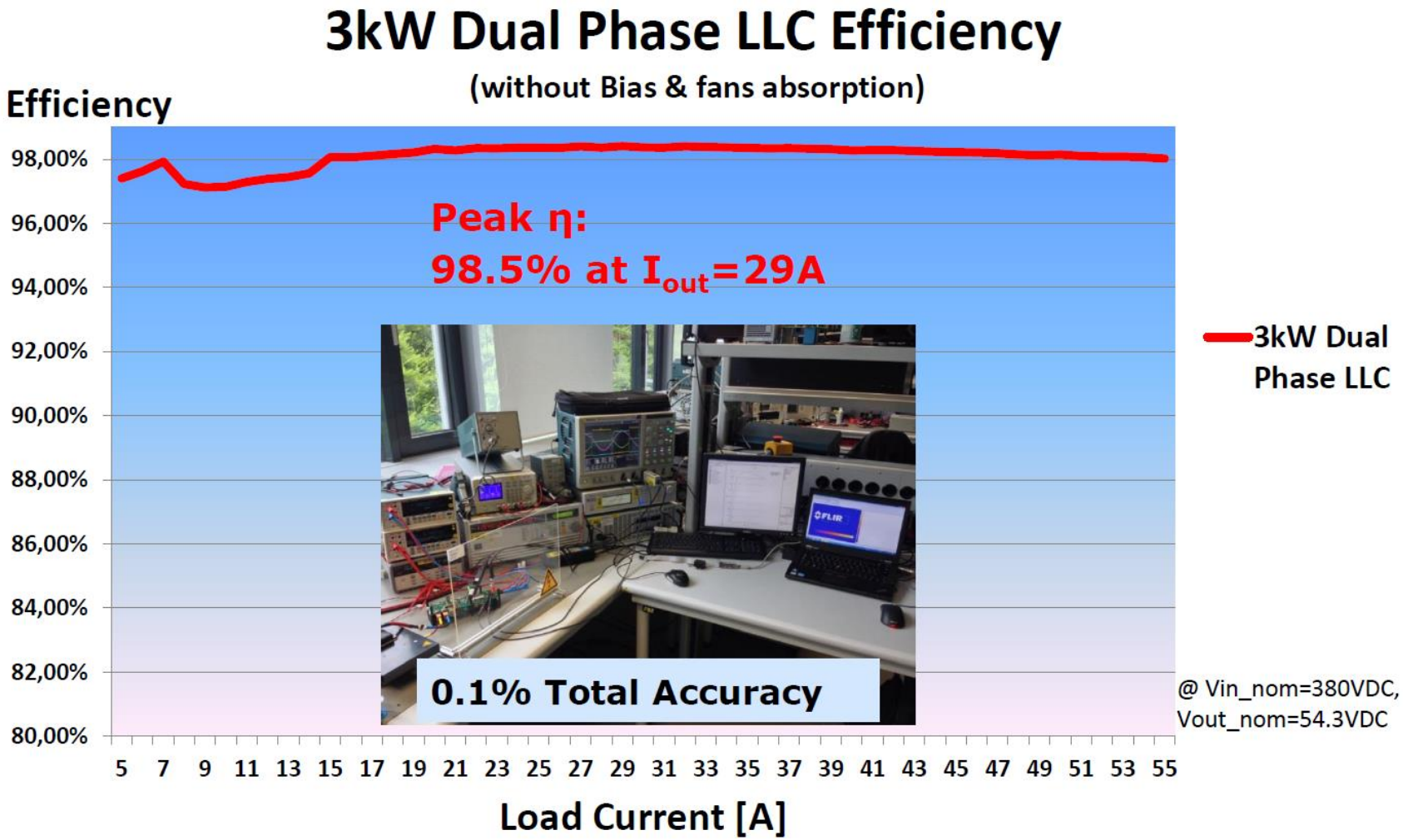

Copyright © Infineon Technologies AG 2017. All rights reserved.

Table of Contents

1 General Description

2 Efficiency Results

3 Design Concept

Copyright © Infineon Technologies AG 2017. All rights reserved.

Design Concept

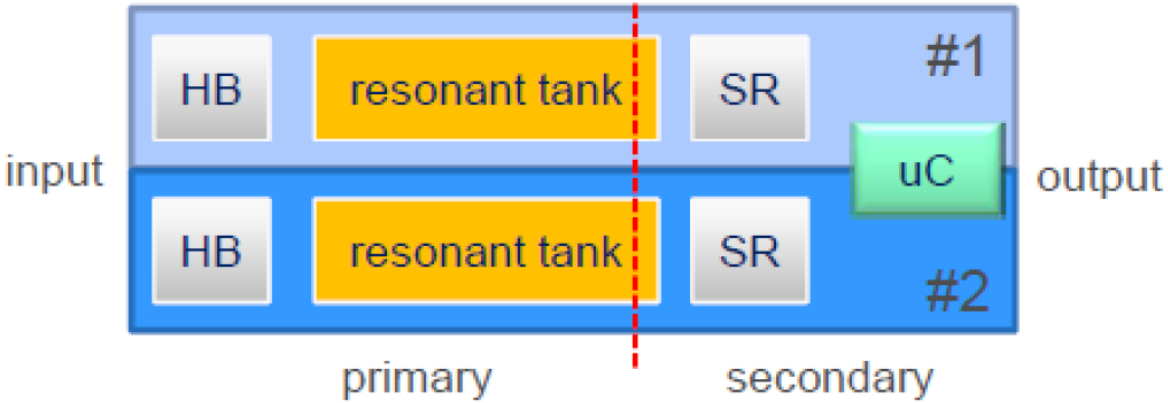

Copyright © Infineon Technologies AG 2017. All rights reserved.

Two Daughter Boards

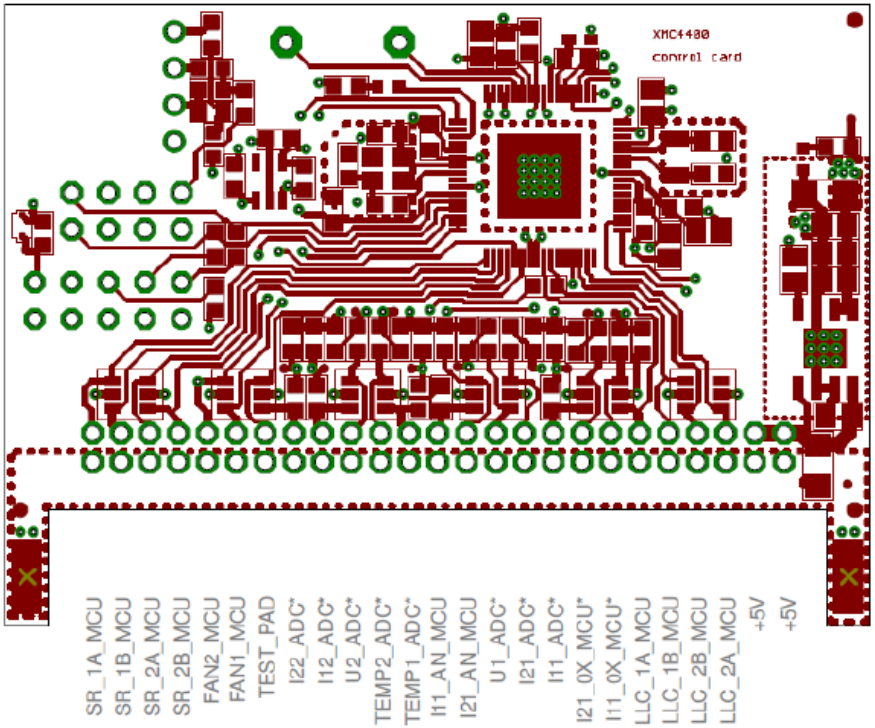

Microcontroller Board

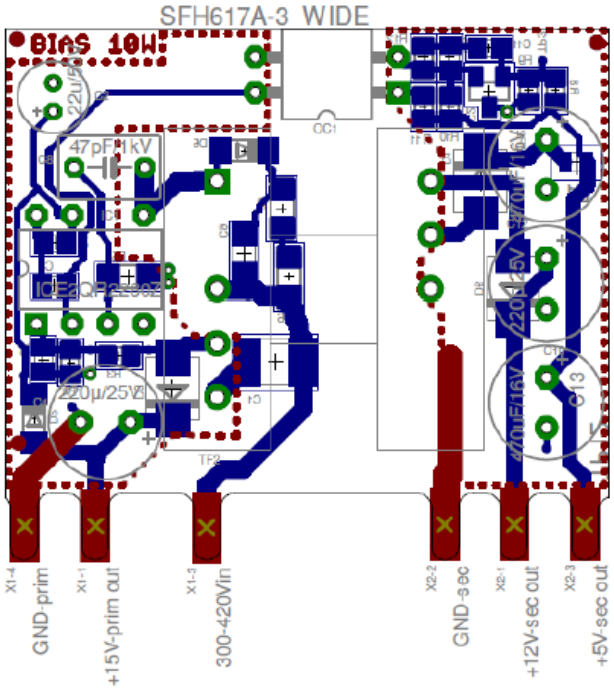

Auxiliary Converter Board

Copyright © Infineon Technologies AG 2017. All rights reserved.

Evaluation Board
EVAL_3KW_2LLC_P7_47

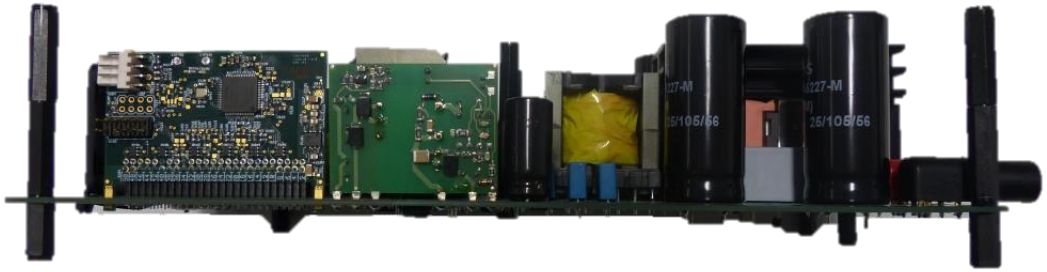

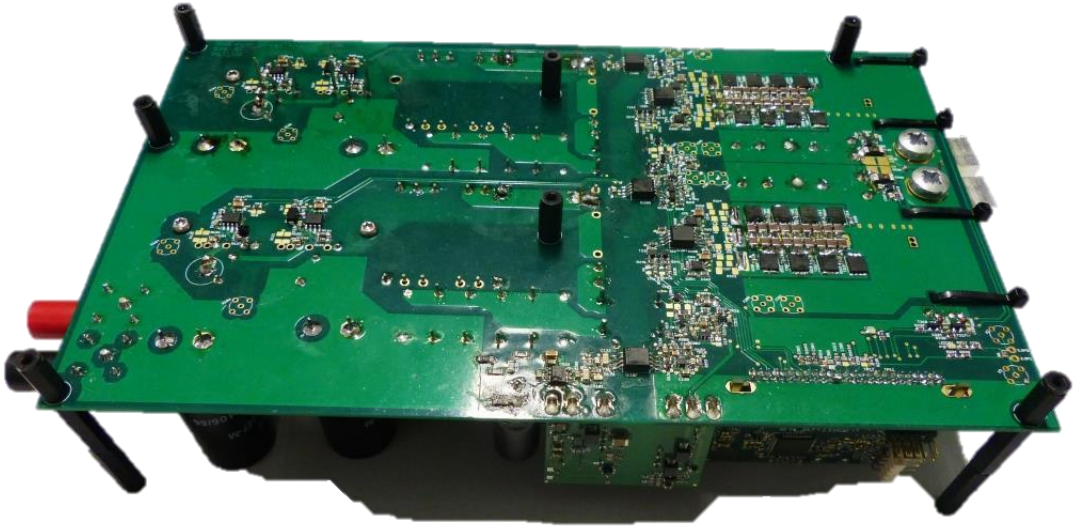

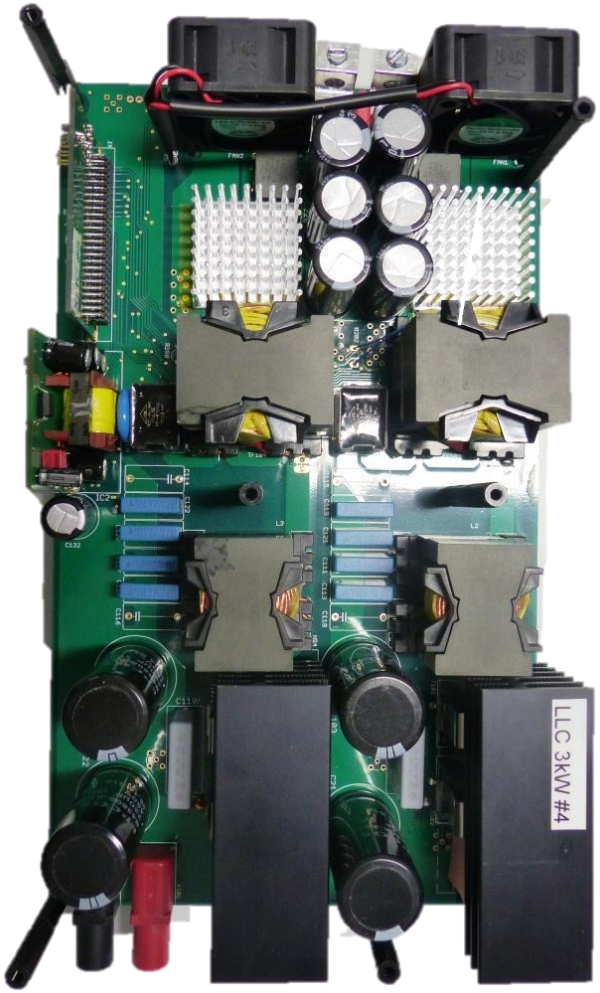

Copyright © Infineon Technologies AG 2017. All rights reserved.

Support Slides
3KW Dual LLC Evaluation Board

Evaluation Board Page

- Technical Description
- Datasheets
- Parameters
- Related material
- Videos

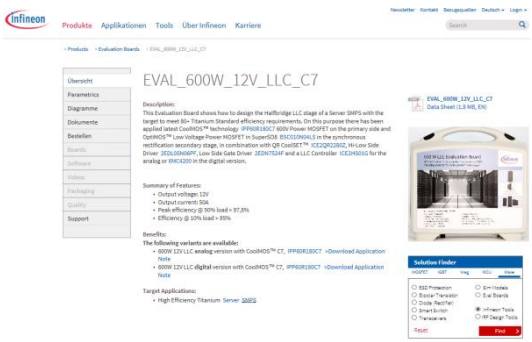

- EVAL_3KW_2LLC_P7_47

Product Family Pages

- Product Brief
- Application Notes
- Selection Guides
- Datasheets and Portfolio
- Videos
- Simulation Models

- IPP60R037P7
- BSC093N15NS5
- XMC4400-F64K512 AB
- 2EDN7524R
- ICE2QR2280Z
- 1EDI60N12AF
- IFX1763XEJ V50
- IFX1763XEJ V33

Copyright © Infineon Technologies AG 2017. All rights reserved.

Part of your life. Part of tomorrow.

Общество с ограниченной ответственностью «МосЧип» ИНН 7719860671 / КПП 771901001
Адрес: 105318, г.Москва, ул.Щербаковская д.3, офис 1107

Данный компонент на территории Российской Федерации

Вы можете приобрести в компании MosChip.

Для оперативного оформления запроса Вам необходимо перейти по данной ссылке:

http://moschip.ru/get-element

Вы можете разместить у нас заказ для любого Вашего проекта, будь то серийное производство или разработка единичного прибора.

В нашем ассортименте представлены ведущие мировые производители активных и пассивных электронных компонентов.

Нашей специализацией является поставка электронной компонентной базы двойного назначения, продукции таких производителей как XILINX, Intel (ex.ALTERA), Vicor, Microchip, Texas Instruments, Analog Devices, Mini-Circuits, Amphenol, Glenair.

Сотрудничество с глобальными дистрибьюторами электронных компонентов, предоставляет возможность заказывать и получать с международных складов практически любой перечень компонентов в оптимальные для Вас сроки.

На всех этапах разработки и производства наши партнеры могут получить квалифицированную поддержку опытных инженеров.

Система менеджмента качества компании отвечает требованиям в соответствии с ГОСТ Р ИСО 9001, ГОСТ РВ 0015-002 и ЭС РД 009

Офис по работе с юридическими лицами:

105318, г.Москва, ул.Щербаковская д.3, офис 1107, 1118, ДЦ «Щербаковский»

Телефон: +7 495 668-12-70 (многоканальный)

Факс: +7 495 668-12-70 (доб.304)

E-mail: info@moschip.ru

Skype отдела продаж:
moschip.ru
moschip.ru_4
moschip.ru_6
moschip.ru_9