3.7 x 3.1mm BUILT-IN CAPACITANCE CERAMIC RESONATOR

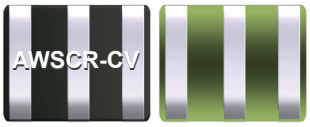

3.7 x 3.1mm

AWSCR-CV

Pb in ceramic
(exempt per RoHS 2002/95/EC Annex (7))

RoHS Compliant

FEATURES:

- Low resonant impedance
- Built-in load capacitors
- IR reflow capable

APPLICATIONS:

- Remote controls, Microprocessor clocks, Mobile phones, DVD & CD-Roms, Electric appliances,
- Consumer electronics

STANDARD SPECIFICATIONS:

Item	Requirement
Frequency Range	8.00MHz to 50.00 MHz
Resonant Impedance	See Table 1
Frequency Tolerance	± 0.5% (at 25℃)
Frequency stability (-25℃～+85℃)*	±0.4% (8.00 MHz~ 13.00 MHz)
	±0.3% (13.01 MHz~ 50.00 MHz)
Withstanding Voltage (V)	50 (DC , 1 min)
Rating Voltage (1) D.C.Voltage	6 V DC max
(2) A.C. Voltage	15 Vp-p. max
Built-in Capacitance	See Table 1
Insulation Resistance	100MΩ min. (10V, 1min)
Operating Temperature	-25°C to +85°C*
Storage Temperature	-55°C to +85°C
Aging Rate (Fosc)	±0.3% max. (10 years)

Table 1

Frequency range (MHz)	Resonant Impedance (Ro)(Ω) max	Standard Built-in Capacitance C1=C2 (pF)
8.00 MHz - 13.00 MHz	30	22pF± 20%
13.01 MHz - 15.99 MHz	60	22pF± 20%
16.00 MHz - 20.00 MHz	40	22pF± 20%
20.00 MHz - 25.99 MHz	40	10pF± 20%
26.00 MHz - 50.00 MHz	40	5pF± 20%

* Please contact ABRACON for tighter stability and/or wider temperature range.

TEST CIRCUIT:

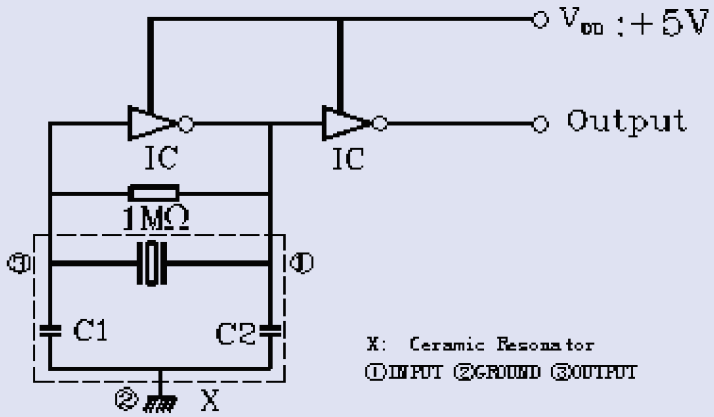

OPTIONS AND PART IDENTIFICATION:

(Left blank if standard)

AWSCR - XX.XXCV - C□□ - □

Frequency	Load Capacitance	Packaging
Frequency in MHz	Contact ABRACON for Built-in Capacitance options	T for Tape and Reel

30332 Esperanza, Rancho Santa Margarita, California 92688
tel 949-546-8000 | fax 949-546-8001 | www.abracon.com

3.7 x 3.1mm BUILT-IN CAPACITANCE CERAMIC RESONATOR

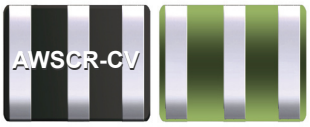

3.7 x 3.1mm

AWSCR-CV

Pb in ceramic
(exempt per RoHS 2002/95/EC Annex (7))

RoHS Compliant

OUTLINE DRAWING:

Dimensions: mm

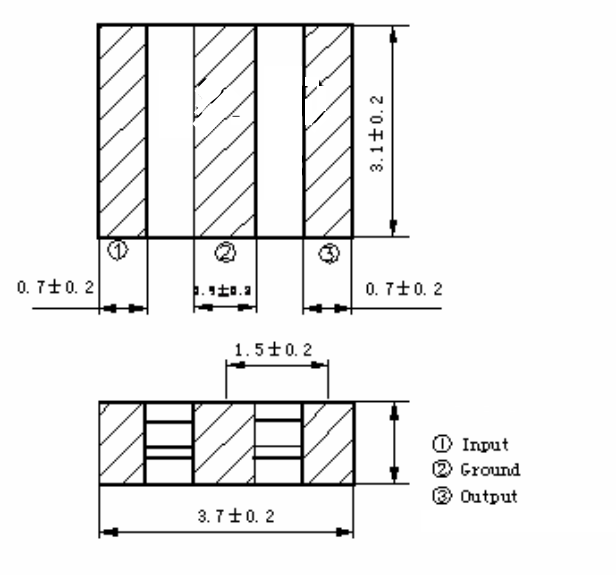

** A stands for the thickness of the ceramic element, which varies with the frequency

RECOMMENDED LAND PATTERN

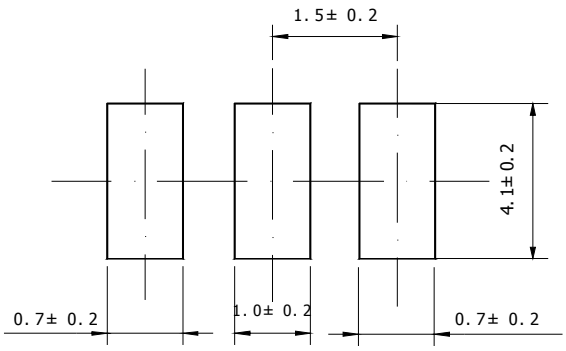

TAPE & REEL: (1,000pcs/reel)

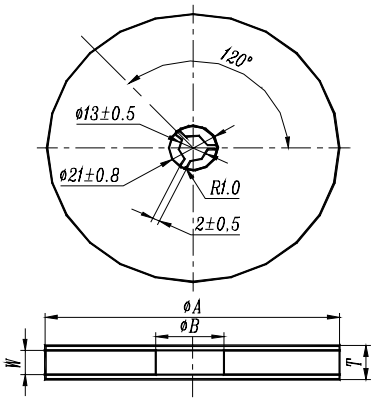

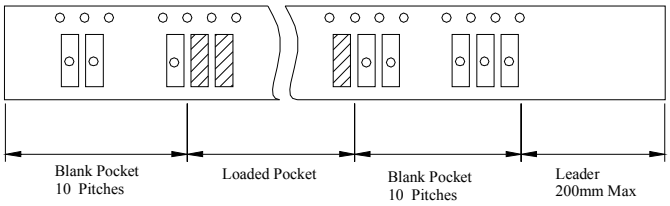

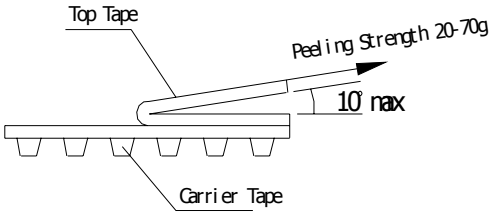

ϕA	ϕB	W	T	Pieces per reel	Carrier tape size
180±3	60min	12.4min	19.4max	1000typ.	12

Dimensions: mm

30332 Esperanza, Rancho Santa Margarita, California 92688
tel 949-546-8000 | fax 949-546-8001 | www.abracon.com

REFLOW PROFILE:

Dimensions: mm

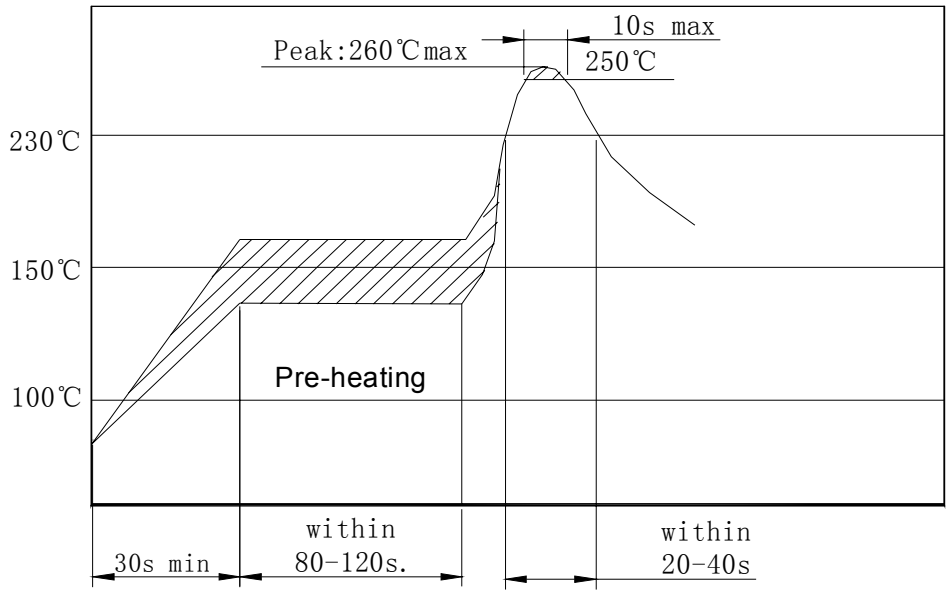

CAUTION

- Do not apply excess mechanical stress to the component body or terminations. Do not attempt to re-form or bend the components as this will cause damage to the component.
- This component is not hermetically sealed. Do not clean or wash the component.
- Reflow soldering: Do not use strong acidity flux, such as flux with chlorine content of greater than 0.2wt% during reflow Soldering.
- Do not expose the component to open flame.
- This specification applies to the functionality of the component as a single unit. Customers are advised to insure that the component is thoroughly evaluated in the particular application.
- Shelf life: The warranted shelf life of this product is six months after the delivery date under the conditions of sealed, unopened, original packaging.
- Storage conditions: If the product is to be stored for a period greater than six months after the delivery date, it is recommended that customers confirm the solderability and characteristics for the product prior to use.
- This product is not recommended for use in the following applications: Automotive, Medical, Military, Safety, or any other high-reliability, life-dependant application. Contact Abracon Corporation prior to using this product when in doubt.

ATTENTION: Abracon Corporation's products are COTS – Commercial-Off-The-Shelf products; suitable for Commercial, Industrial and, where designated, Automotive Applications. Abracon's products are not specifically designed for Military, Aviation, Aerospace, Life-dependant Medical applications or any application requiring high reliability where component failure could result in loss of life and/or property. For applications requiring high reliability and/or presenting an extreme operating environment, written consent and authorization from Abracon Corporation is required. Please contact Abracon Corporation for more information.

30332 Esperanza, Rancho Santa Margarita, California 92688
tel 949-546-8000 | fax 949-546-8001 | www.abracon.com

Общество с ограниченной ответственностью «МосЧип» ИНН 7719860671 / КПП 771901001
Адрес: 105318, г.Москва, ул.Щербаковская д.3, офис 1107

Данный компонент на территории Российской Федерации

Вы можете приобрести в компании MosChip.

Для оперативного оформления запроса Вам необходимо перейти по данной ссылке:

http://moschip.ru/get-element

Вы можете разместить у нас заказ для любого Вашего проекта, будь то серийное производство или разработка единичного прибора.

В нашем ассортименте представлены ведущие мировые производители активных и пассивных электронных компонентов.

Нашей специализацией является поставка электронной компонентной базы двойного назначения, продукции таких производителей как XILINX, Intel (ex.ALTERA), Vicor, Microchip, Texas Instruments, Analog Devices, Mini-Circuits, Amphenol, Glenair.

Сотрудничество с глобальными дистрибьюторами электронных компонентов, предоставляет возможность заказывать и получать с международных складов практически любой перечень компонентов в оптимальные для Вас сроки.

На всех этапах разработки и производства наши партнеры могут получить квалифицированную поддержку опытных инженеров.

Система менеджмента качества компании отвечает требованиям в соответствии с ГОСТ Р ИСО 9001, ГОСТ РВ 0015-002 и ЭС РД 009

Офис по работе с юридическими лицами:

105318, г.Москва, ул.Щербаковская д.3, офис 1107, 1118, ДЦ «Щербаковский»

Телефон: +7 495 668-12-70 (многоканальный)

Факс: +7 495 668-12-70 (доб.304)

E-mail: info@moschip.ru

Skype отдела продаж:
moschip.ru
moschip.ru_4
moschip.ru_6
moschip.ru_9