MC68HC08KH12A

Data Sheet

M68HC08
Microcontrollers

MC68HC08KH12A
Rev. 1.1
09/2005

freescale.com

MC68HC08KH12A

Data Sheet

To provide the most up-to-date information, the revision of our documents on the World Wide Web will be the most current. Your printed copy may be an earlier revision. To verify you have the latest information available, refer to:

http://freescale.com

The following revision history table summarizes changes contained in this document. For your convenience, the page number designators have been linked to the appropriate location.

Revision History

Date	Revision Level	Description	Page Number(s)
March, 2004	1.0	First general release.	—
September, 2005	1.1	Updated to meet Freescale identity guidelines.	Throughout

Freescale™ and the Freescale logo are trademarks of Freescale Semiconductor, Inc.

© Freescale Semiconductor, Inc., 2005. All rights reserved.

List of Chapters

Chapter 1 General Description. 15
Chapter 2 Memory Map. 23
Chapter 3 Random-Access Memory (RAM) 33
Chapter 4 Read-Only Memory (ROM) 35
Chapter 5 Configuration Register (CONFIG) 37
Chapter 6 Central Processor Unit (CPU). 39
Chapter 7 System Integration Module (SIM). 45
Chapter 8 Clock Generator Module (CGM) 63
Chapter 9 Universal Serial Bus Module (USB) 79
Chapter 10 Monitor ROM (MON) 103
Chapter 11 Timer Interface Module (TIM) 111
Chapter 12 Input/Output (I/O) Ports. 125
Chapter 13 Computer Operating Properly (COP). 141
Chapter 14 External Interrupt (IRQ). 145
Chapter 15 Keyboard Interrupt Module (KBI). 149
Chapter 16 Break Module (BRK) 163
Chapter 17 Electrical Specifications 167
Chapter 18 Mechanical Specifications 173

Table of Contents

Chapter 1
General Description

1.1 Introduction 15
1.2 Features 15
1.3 MCU Block Diagram 16
1.4 Pin Assignments 18
1.4.1 64-Pin Quad Flat Pack (QFP) 18
1.4.2 52-Pin Low-Profile Quad Flat Pack (LQFP) 19
1.4.3 Power Supply Pins (V_{DDA}, V_{SSA}, V_{DD1}, V_{SS1}, V_{DD2}, and V_{SS2}) 20
1.4.4 Oscillator Pins (OSC1 and OSC2) 20
1.4.5 External Reset Pin ($\overline{RST}$) 20
1.4.6 External Interrupt Pin ($\overline{IRQ1}$) 20
1.4.7 USB Data Pins (DPLUS0–DPLUS4 and DMINUS0–DMINUS4) 21
1.4.8 Voltage Regulator Out (REGOUT) 21
1.4.9 Port A Input/Output (I/O) Pins (PTA7–PTA0) 21
1.4.10 Port B I/O Pins (PTB7–PTB0) 21
1.4.11 Port C I/O Pins (PTC4–PTC0) 21
1.4.12 Port D I/O Pins (PTD7/KBD7–PTD0/KBD0) 21
1.4.13 Port E I/O Pins (PTE4, PTE3/KBE3, PTE2/KBE2/TCH1, PTE1/KBE1/TCH0, PTE0/KBE0/TCLK) 21
1.4.14 Port F I/O Pins (PTF7/KBF7–PTF0/KBF0) 21

Chapter 2
Memory Map

2.1 Introduction 23
2.2 I/O Section 23
2.3 Monitor ROM 31

Chapter 3
Random-Access Memory (RAM)

3.1 Introduction 33
3.2 Functional Description 33

Chapter 4
Read-Only Memory (ROM)

4.1 Introduction 35
4.2 Functional Description 35

Chapter 5
Configuration Register (CONFIG)

5.1 Introduction . . . 37
5.2 Functional Description . . . 37

Chapter 6
Central Processor Unit (CPU)

6.1 Features . . . 39
6.2 CPU Registers . . . 39
6.2.1 Accumulator (A) . . . 40
6.2.2 Index Register (H:X) . . . 40
6.2.3 Stack Pointer (SP) . . . 41
6.2.4 Program Counter (PC) . . . 41
6.2.5 Condition Code Register (CCR) . . . 42
6.3 Arithmetic/Logic Unit (ALU) . . . 43

Chapter 7
System Integration Module (SIM)

7.1 Introduction . . . 45
7.2 SIM Bus Clock Control and Generation . . . 47
7.2.1 Bus Timing . . . 47
7.2.2 Clock Start-Up from POR . . . 47
7.2.3 Clocks in Stop Mode and Wait Mode . . . 47
7.3 Reset and System Initialization . . . 48
7.3.1 External Pin Reset . . . 48
7.3.2 Active Resets from Internal Sources . . . 48
7.3.2.1 Power-On Reset . . . 49
7.3.2.2 Computer Operating Properly (COP) Reset . . . 49
7.3.2.3 Illegal Opcode Reset . . . 50
7.3.2.4 Illegal Address Reset . . . 50
7.3.2.5 Universal Serial Bus Reset . . . 50
7.4 SIM Counter . . . 51
7.4.1 SIM Counter During Power-On Reset . . . 51
7.4.2 SIM Counter During Stop Mode Recovery . . . 51
7.4.3 SIM Counter and Reset States . . . 51
7.5 Exception Control . . . 51
7.5.1 Interrupts . . . 51
7.5.1.1 Hardware Interrupts . . . 53
7.5.1.2 SWI Instruction . . . 54
7.5.2 Interrupt Status Registers . . . 55
7.5.2.1 Interrupt Status Register 1 . . . 56
7.5.2.2 Interrupt Status Register 2 . . . 56
7.5.2.3 Interrupt Status Register 3 . . . 56
7.5.3 Reset . . . 56
7.5.4 Break Interrupts . . . 57
7.5.5 Status Flag Protection in Break Mode . . . 57

7.6 Low-Power Modes . . . 57
7.6.1 Wait Mode . . . 57
7.6.2 Stop Mode . . . 58
7.7 SIM Registers . . . 59
7.7.1 Break Status Register (BSR) . . . 59
7.7.2 Reset Status Register (RSR) . . . 60
7.7.3 Break Flag Control Register (BFCR) . . . 61

Chapter 8
Clock Generator Module (CGM)

8.1 Introduction . . . 63
8.2 Features . . . 63
8.3 Functional Description . . . 63
8.3.1 Crystal Oscillator Circuit . . . 65
8.3.2 Phase-Locked Loop Circuit (PLL) . . . 65
8.3.3 PLL Circuits . . . 65
8.3.4 Acquisition and Tracking Modes . . . 66
8.3.5 Manual and Automatic PLL Bandwidth Modes . . . 66
8.3.6 Programming the PLL . . . 67
8.3.7 Special Programming Exceptions . . . 68
8.3.8 Base Clock Selector Circuit . . . 68
8.3.9 CGM External Connections . . . 68
8.4 I/O Signals . . . 69
8.4.1 Crystal Amplifier Input Pin (OSC1) . . . 69
8.4.2 Crystal Amplifier Output Pin (OSC2) . . . 69
8.4.3 External Filter Capacitor Pin (CGMXFC) . . . 69
8.4.4 PLL Analog Power Pin (V_{DDA}) . . . 69
8.4.5 PLL Analog Ground Pin (V_{SSA}) . . . 70
8.4.6 Buffered Crystal Clock Output (CGMVOUT) . . . 70
8.4.7 CGMVSEL . . . 70
8.4.8 Oscillator Enable Signal (SIMOSCEN) . . . 70
8.4.9 Crystal Output Frequency Signal (CGMXCLK) . . . 70
8.4.10 CGM Base Clock Output (CGMOUT) . . . 70
8.4.11 CGM CPU Interrupt (CGMINT) . . . 70
8.5 CGM Registers . . . 70
8.5.1 PLL Control Register (PCTL) . . . 71
8.5.2 PLL Bandwidth Control Register (PBWC) . . . 73
8.5.3 PLL Multiplier Select Registers (PMSH:PMSL) . . . 74
8.5.4 PLL Reference Divider Select Register (PRDS) . . . 74
8.6 Interrupts . . . 75
8.7 Special Modes . . . 75
8.7.1 Wait Mode . . . 75
8.7.2 CGM During Break Interrupts . . . 75
8.8 Acquisition/Lock Time Specifications . . . 76
8.8.1 Acquisition/Lock Time Definitions . . . 76
8.8.2 Parametric Influences on Reaction Time . . . 77
8.8.3 Choosing a Filter Capacitor . . . 77
8.8.4 Reaction Time Calculation . . . 78

Chapter 9
Universal Serial Bus Module (USB)

9.1 Introduction . . . 79
9.2 Features . . . 79
9.3 Overview . . . 80
9.4 I/O Register Description of the HUB function . . . 81
9.4.1 USB HUB Root Port Control Register (HRPCR) . . . 83
9.4.2 USB HUB Downstream Port Control Register (HDP1CR-HDP4CR) . . . 84
9.4.3 USB SIE Timing Interrupt Register (SIETIR) . . . 86
9.4.4 USB SIE Timing Status Register (SIETSR) . . . 87
9.4.5 USB HUB Address Register (HADDR) . . . 88
9.4.6 USB HUB Interrupt Register 0 (HIR0) . . . 88
9.4.7 USB HUB Control Register 0 (HCR0) . . . 89
9.4.8 USB HUB Endpoint1 Control & Data Register (HCDR) . . . 90
9.4.9 USB HUB Status Register (HSR) . . . 91
9.4.10 USB HUB Endpoint 0 Data Registers 0-7 (HE0D0-HE0D7) . . . 92
9.5 I/O Register Description of the Embedded Device Function . . . 93
9.5.1 USB Embedded Device Address Register (DADDR) . . . 95
9.5.2 USB Embedded Device Interrupt Register 0 (DIR0) . . . 95
9.5.3 USB Embedded Device Interrupt Register 1 (DIR1) . . . 96
9.5.4 USB Embedded Device Control Register 0 (DCR0) . . . 97
9.5.5 USB Embedded Device Control Register 1 (DCR1) . . . 98
9.5.6 USB Embedded Device Status Register (DSR) . . . 99
9.5.7 USB Embedded Device Control Register 2 (DCR2) . . . 100
9.5.8 USB Embedded Device Endpoint 0 Data Registers (DE0D0-DE0D7) . . . 101
9.5.9 USB Embedded Device Endpoint 1/2 Data Registers (DE1D0-DE1D7) . . . 101

Chapter 10
Monitor ROM (MON)

10.1 Introduction . . . 103
10.2 Features . . . 103
10.3 Functional Description . . . 103
10.3.1 Entering Monitor Mode . . . 105
10.3.2 Data Format . . . 106
10.3.3 Echoing . . . 106
10.3.4 Break Signal . . . 107
10.3.5 Commands . . . 107
10.3.6 Baud Rate . . . 109

Chapter 11
Timer Interface Module (TIM)

11.1 Introduction . . . 111
11.2 Features . . . 111
11.3 Pin Name Conventions . . . 111
11.4 Functional Description . . . 111
11.4.1 TIM Counter Prescaler . . . 113
11.4.2 Input Capture . . . 113

11.4.3 Output Compare . . . 113
11.4.3.1 Unbuffered Output Compare . . . 114
11.4.3.2 Buffered Output Compare . . . 114
11.4.4 Pulse Width Modulation (PWM) . . . 114
11.4.4.1 Unbuffered PWM Signal Generation . . . 115
11.4.4.2 Buffered PWM Signal Generation . . . 116
11.4.4.3 PWM Initialization . . . 116
11.5 Interrupts . . . 117
11.6 Low-Power Modes . . . 117
11.6.1 Wait Mode . . . 117
11.6.2 Stop Mode . . . 117
11.7 TIM During Break Interrupts . . . 117
11.8 I/O Signals . . . 118
11.8.1 TIM Clock Pin (PTE0/TCLK) . . . 118
11.8.2 TIM Channel I/O Pins (PTE1/TCH0:PTE2/TCH1) . . . 118
11.9 I/O Registers . . . 118
11.9.1 TIM Status and Control Register (TSC) . . . 119
11.9.2 TIM Counter Registers (TCNTH:TCNTL) . . . 120
11.9.3 TIM Counter Modulo Registers (TMODH:TMODL) . . . 121
11.9.4 TIM Channel Status and Control Registers (TSC0:TSC1) . . . 121
11.9.5 TIM Channel Registers (TCH0H/L–TCH1H/L) . . . 124

Chapter 12
Input/Output (I/O) Ports

12.1 Introduction . . . 125
12.2 Port A . . . 126
12.2.1 Port A Data Register (PTA) . . . 126
12.2.2 Data Direction Register A (DDRA) . . . 127
12.3 Port B . . . 128
12.3.1 Port B Data Register (PTB) . . . 128
12.3.2 Data Direction Register B (DDRB) . . . 128
12.4 Port C . . . 129
12.4.1 Port C Data Register (PTC) . . . 129
12.4.2 Data Direction Register C (DDRC) . . . 130
12.5 Port D . . . 131
12.5.1 Port D Data Register (PTD) . . . 131
12.5.2 Data Direction Register D (DDRD) . . . 132
12.6 Port E . . . 133
12.6.1 Port E Data Register (PTE) . . . 133
12.6.2 Data Direction Register E (DDRE) . . . 134
12.6.3 Port-E Optical Interface Enable Register . . . 135
12.7 Port F . . . 138
12.7.1 Port F Data Register (PTF) . . . 138
12.7.2 Data Direction Register F (DDRF) . . . 138
12.8 Port Options . . . 139
12.8.1 Port Option Control Register (POC) . . . 140

Chapter 13
Computer Operating Properly (COP)

13.1 Introduction . . . 141
13.2 Functional Description . . . 141
13.3 I/O Signals . . . 142
13.3.1 CGMXCLK . . . 142
13.3.2 COPCTL Write . . . 142
13.3.3 Power-On Reset. . . . 142
13.3.4 Internal Reset. . . . 143
13.3.5 Reset Vector Fetch . . . 143
13.3.6 COPD (COP Disable). . . . 143
13.3.7 COPRS (COP Rate Select) . . . 143
13.4 COP Control Register (COPCTL) . . . 144
13.5 Interrupts . . . 144
13.6 Monitor Mode . . . 144
13.7 Low-Power Modes . . . 144
13.7.1 Wait Mode . . . 144
13.7.2 Stop Mode . . . 144
13.8 COP Module During Break Mode . . . 144

Chapter 14
External Interrupt (IRQ)

14.1 Introduction . . . 145
14.2 Features. . . . 145
14.3 Functional Description . . . 145
14.3.1 $\overline{\text{IRQ1}}$ Pin. . . . 147
14.4 IRQ Module During Break Interrupts . . . 147
14.5 IRQ Status and Control Register (ISCR) . . . 148

Chapter 15
Keyboard Interrupt Module (KBI)

15.1 Introduction . . . 149
15.2 Features. . . . 149
15.3 Port-D Keyboard Interrupt Block Diagram . . . 150
15.3.1 Port-D Keyboard Interrupt Functional Description . . . 151
15.3.2 Port-D Keyboard Initialization. . . . 152
15.3.3 Port-D Keyboard Interrupt Registers . . . 152
15.3.3.1 Port-D Keyboard Status and Control Register:. . . . 152
15.3.3.2 Port-D Keyboard Interrupt Enable Register . . . 153
15.4 Port-E Keyboard Interrupt Block Diagram . . . 154
15.4.1 Port-E Keyboard Interrupt Functional Description . . . 155
15.4.2 Port-E Keyboard Initialization. . . . 156
15.4.3 Port-E Keyboard Interrupt Registers . . . 156
15.4.3.1 Port-E Keyboard Status and Control Register . . . 156
15.4.3.2 Port-E Keyboard Interrupt Enable Register . . . 157

15.5 Port-F Keyboard Interrupt Block Diagram . . . 158
15.5.1 Port-F Keyboard Interrupt Functional Description . . . 159
15.5.2 Port-F Keyboard Initialization . . . 160
15.5.3 Port-F Keyboard Interrupt Registers . . . 160
15.5.3.1 Port-F Keyboard Status and Control Register . . . 160
15.5.3.2 Port-F Keyboard Interrupt Enable Register . . . 161
15.5.3.3 Port-F Pull-up Enable Register . . . 161
15.6 Wait Mode . . . 161
15.7 Stop Mode . . . 162
15.8 Keyboard Module During Break Interrupts . . . 162

Chapter 16
Break Module (BRK)

16.1 Introduction . . . 163
16.2 Features . . . 163
16.3 Functional Description . . . 163
16.3.1 Flag Protection During Break Interrupts . . . 164
16.3.2 CPU During Break Interrupts . . . 164
16.3.3 TIM During Break Interrupts . . . 165
16.3.4 COP During Break Interrupts . . . 165
16.4 Break Module Registers . . . 165
16.4.1 Break Status and Control Register (BRKSCR) . . . 165
16.4.2 Break Address Registers (BRKH and BRKL) . . . 166
16.5 Low-Power Modes . . . 166
16.5.1 Wait Mode . . . 166
16.5.2 Stop Mode . . . 166

Chapter 17
Electrical Specifications

17.1 Introduction . . . 167
17.2 Absolute Maximum Ratings . . . 167
17.3 Functional Operating Range . . . 168
17.4 Thermal Characteristics . . . 168
17.5 DC Electrical Characteristics . . . 169
17.6 Control Timing . . . 170
17.7 Oscillator Characteristics . . . 170
17.8 TImer Interface Module Characteristics . . . 170
17.9 Clock Generation Module Characteristics . . . 171
17.9.1 CGM Component Specifications . . . 171
17.9.2 CGM Electrical Specifications . . . 171
17.9.3 Acquisition/Lock Time Specifications . . . 172

Chapter 18
Mechanical Specifications

18.1 Introduction . . . 173
18.2 64-Pin Quad Flat Pack (QFP) . . . 174
18.3 52-Pin Low-Profile Quad Flat Pack (LQFP) . . . 175

Chapter 1
General Description

1.1 Introduction

The MC68HC08KH12A is a member of the low-cost, high-performance M68HC08 Family of 8-bit microcontroller units (MCUs). All MCUs in the family use the enhanced M68HC08 central processor unit (CPU08) and are available with a variety of modules, memory sizes and types, and package types.

1.2 Features

Features of the MC68HC08KH12A include the following:

- High-performance M68HC08 architecture
- Fully upward-compatible object code with M6805, M146805, and M68HC05 Families
- 6-MHz internal bus operation
- Low-power design (fully static with stop and wait modes)
- 12K-bytes of user ROM with data security[1]
- 384 bytes of on-chip RAM
- 42 general purpose I/O, 29 with software configurable pullups
- 16 bit, 2-channel timer interface module (TIM)
- 20-bit keyboard interrupt port
- 5 LED direct drive port pins
- 48-MHz phase-locked loop
- Full universal serial bus specification 1.1 composite HUB with embedded[2] functions:
  - 1 × 12-MHz upstream port
  - 4 × 12-MHz/1.5MHz downstream ports
  - 1 × Hub control endpoint (Endpoint0) with 8 byte transmit buffer and 8 byte receive buffer
  - 1 × Hub interrupt endpoint (Endpoint1) with 1 byte transmit buffer
  - 1 × device control endpoint (Endpoint0) with 8 byte transmit buffer and 8 byte receive buffer
  - Device interrupt endpoints (Endpoint1 and Endpoint2) share with 8 byte transmit buffer
- On-chip 3.3V regulator for USB transceiver
- System protection features
  - Optional computer operating properly (COP) reset
  - Illegal opcode detection with optional reset
  - Illegal address detection with optional reset

1. No security feature is absolutely secure. However, Freescale's strategy is to make reading or copying the ROM difficult for unauthorized users.
2. Embedded device supports only bulk and interrupt transfers, and does not support isochronous transfers.

- Master reset pin with internal pullup and power-on reset
- An external asynchronous interrupt pin with internal pullup ($\overline{IRQ1}$)
- 64-pin plastic quad flat pack (QFP) package, 52-pin low-profile quad flat pack (LQFP)

Features of the CPU08 include the following:

- Enhanced HC05 programming model
- Extensive loop control functions
- 16 addressing modes (eight more than the HC05)
- 16-bit index register and stack pointer
- Memory-to-memory data transfers
- Fast 8 × 8 multiply instruction
- Fast 16/8 divide instruction
- binary-coded decimal (BCD) instructions
- Optimization for controller applications
- Third party C language support

1.3 MCU Block Diagram

Figure 1-1 shows the structure of the MC68HC08KH12A.

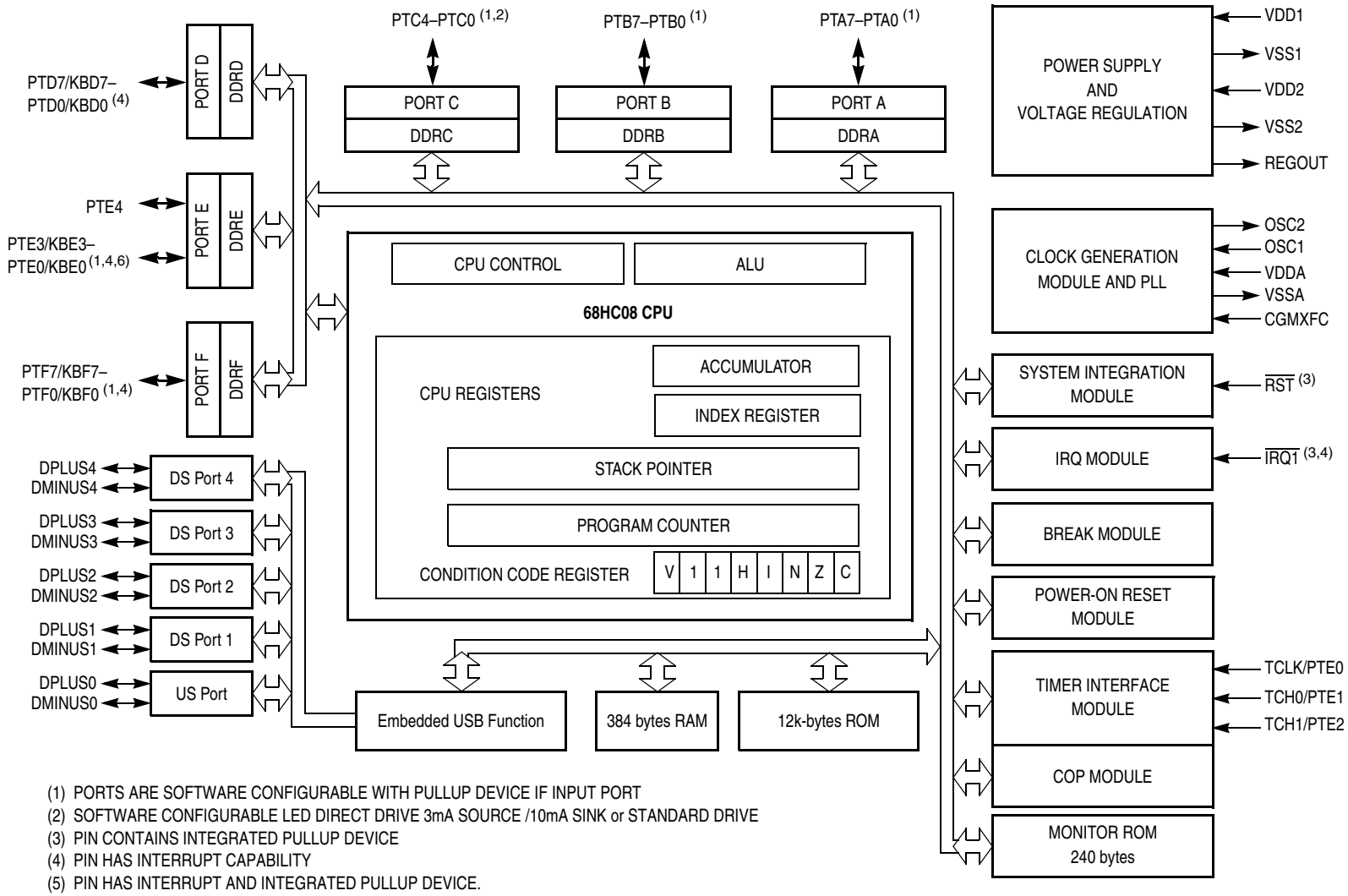

(1) PORTS ARE SOFTWARE CONFIGURABLE WITH PULLUP DEVICE IF INPUT PORT
(2) SOFTWARE CONFIGURABLE LED DIRECT DRIVE 3mA SOURCE /10mA SINK or STANDARD DRIVE
(3) PIN CONTAINS INTEGRATED PULLUP DEVICE
(4) PIN HAS INTERRUPT CAPABILITY
(5) PIN HAS INTERRUPT AND INTEGRATED PULLUP DEVICE.
(6) PIN HAS OPTICAL COUPLING INTERFACE

Figure 1-1. MCU Block Diagram

1.4 Pin Assignments

1.4.1 64-Pin Quad Flat Pack (QFP)

Figure 1-2 shows the 64-pin QFP assignments.

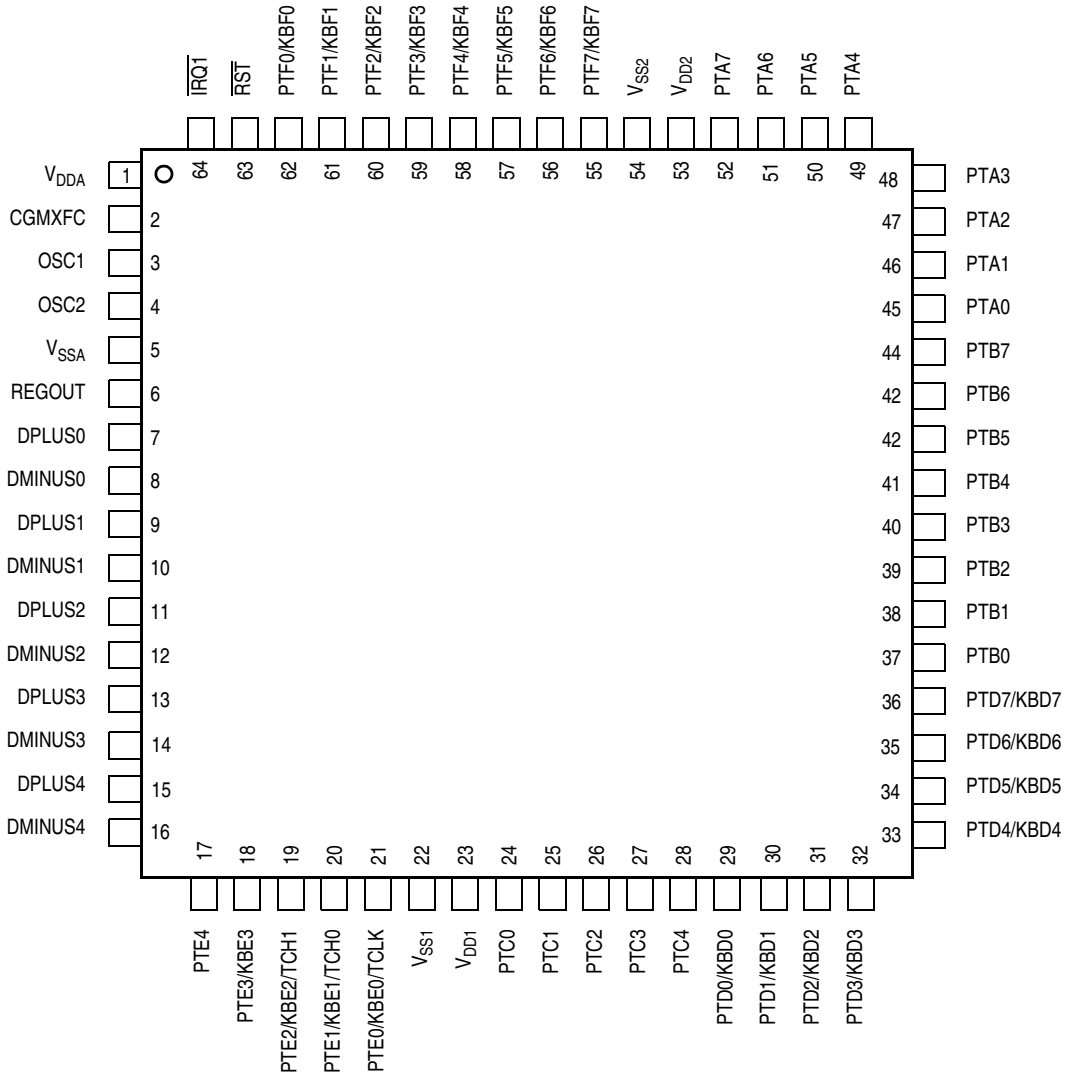

Figure 1-2. 64-Pin QFP Pin Assignment (Top View)

1.4.2 52-Pin Low-Profile Quad Flat Pack (LQFP)

Figure 1-3 shows the 52-pin LQFP pin assignment.

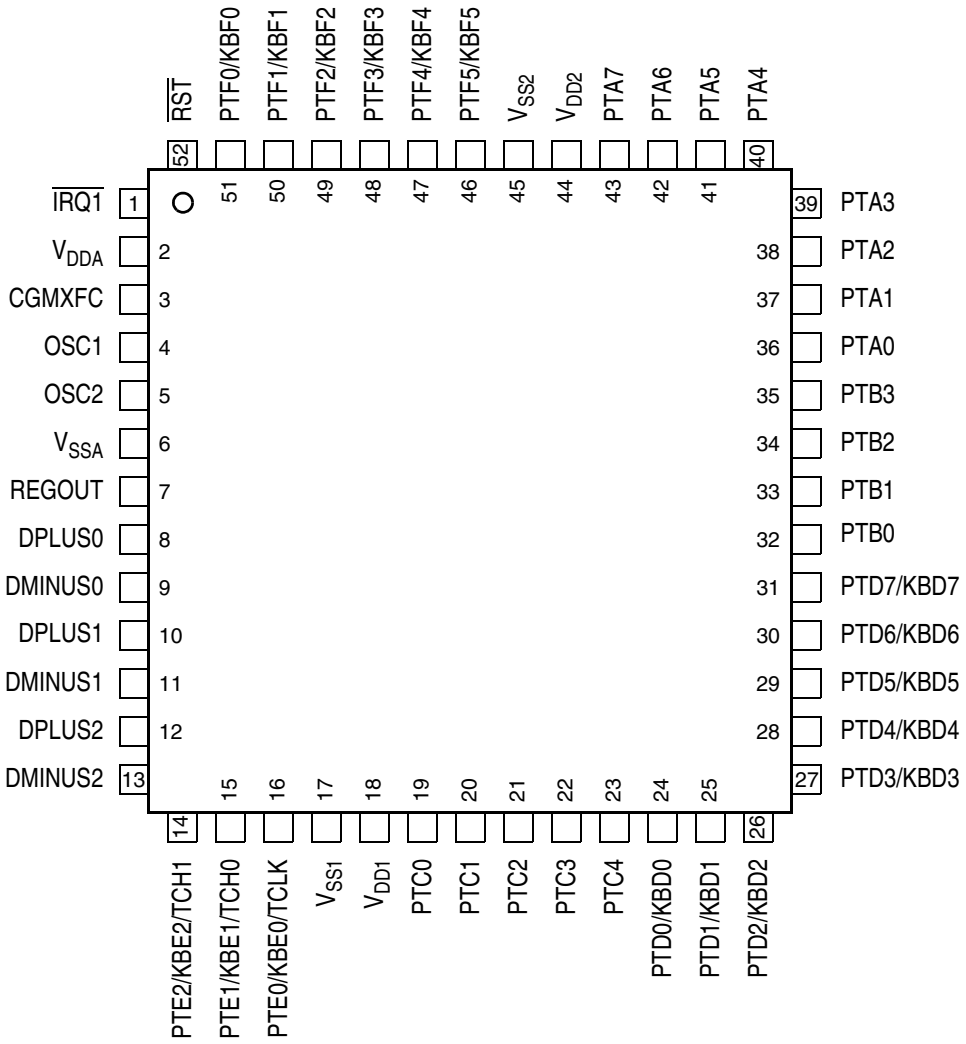

Pins not available on 52-pin LQFP package		
DPLUS3	PTB4	PTE3/KBE3
DMINUS3	PTB5	PTE4
DPLUS4	PTB6	PTF6/KBF6
DMINUS4	PTB7	PTF7/KBF7
Note: These signal on the die are not connected to any pin (floating), therefore, user software should set these lines to output.		

Figure 1-3. 52-Pin LQFP Pin Assignment (Top View)

1.4.3 Power Supply Pins (V_{DDA}, V_{SSA}, V_{DD1}, V_{SS1}, V_{DD2}, and V_{SS2})

V_{DDA} and V_{SSA} are the analog power supply and ground pins used by the on-chip Phase-Locked Loop circuit.

V_{DD2} and V_{SS2} are the power supply and ground pins used by the internal circuitry of the chip.

V_{DD1} and V_{SS1} are the power supply and ground pins to the I/O pads. The MCU operates from a single power supply.

Fast signal transitions on MCU pins place high, short-duration current demands on the power supply. To prevent noise problems, take special care to provide power supply bypassing at the MCU as Figure 1-4 shows. Place the bypass capacitors as close to the MCU power pins as possible. Use high-frequency-response ceramic capacitors for C_{BYPASS}. C_{BULK} are optional bulk current bypass capacitors for use in applications that require the port pins to source high current levels.

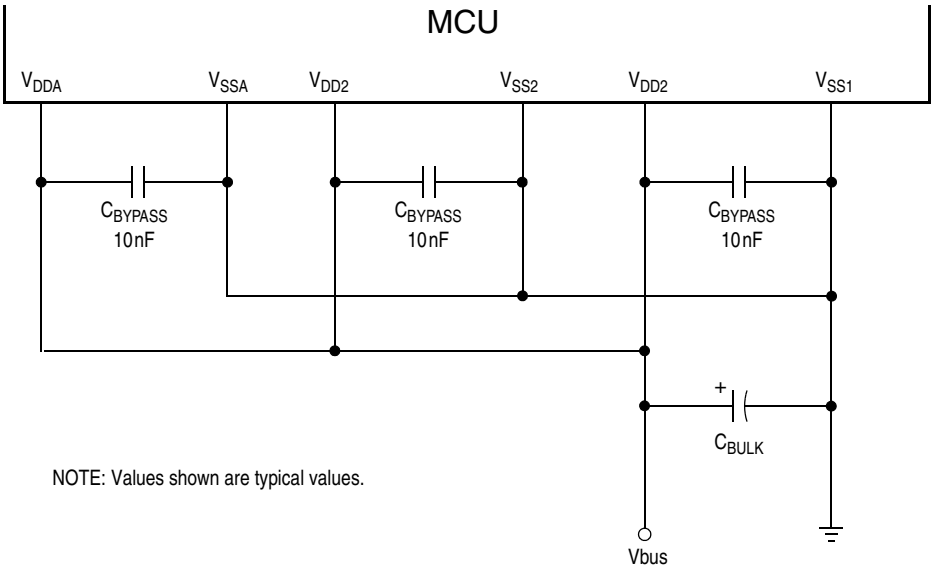

Figure 1-4. Power Supply Bypassing

1.4.4 Oscillator Pins (OSC1 and OSC2)

The OSC1 and OSC2 pins are the connections for the on-chip oscillator circuit. (See Chapter 8 Clock Generator Module (CGM).)

1.4.5 External Reset Pin ($\overline{RST}$)

A logic zero on the $\overline{RST}$ pin forces the MCU to a known start-up state. $\overline{RST}$ is bidirectional, allowing a reset of the entire system. It is driven low when any internal reset source is asserted. The $\overline{RST}$ pin contains an internal pullup device. ((See Chapter 7 System Integration Module (SIM).)

1.4.6 External Interrupt Pin ($\overline{IRQ1}$)

$\overline{IRQ1}$ is an asynchronous external interrupt pin. This pin contains an internal pullup device. (See Chapter 14 External Interrupt (IRQ).)

1.4.7 USB Data Pins (DPLUS0–DPLUS4 and DMINUS0–DMINUS4)

DPLUS0–DPLUS4 and DMINUS0–DMINUS4 are the differential data lines used by the USB module. (See Chapter 9 Universal Serial Bus Module (USB).)

1.4.8 Voltage Regulator Out (REGOUT)

REGOUT is the 3.3V output of the on-chip voltage regulator. It is used to supply the voltage for the external pullup resistor required by the USB on either DPLUS or DMINUS lines, depending on type of USB function. REGOUT is also used internally for the USB data driver and the Phase-locked Loop circuit. The REGOUT pin requires an external bulk capacitor 1µF or larger and a bypass capacitor. (See Chapter 9 Universal Serial Bus Module (USB).)

1.4.9 Port A Input/Output (I/O) Pins (PTA7–PTA0)

PTA7–PTA0 are general-purpose bidirectional I/O port pins. (See Chapter 12 Input/Output (I/O) Ports.) Each pin contains a software configurable pull-up device when the pin is configured as an input. (See 12.8 Port Options.)

1.4.10 Port B I/O Pins (PTB7–PTB0)

PTB7–PTB0 are general-purpose bidirectional I/O port pins. (See Chapter 12 Input/Output (I/O) Ports.) Each pin contains a software configurable pull-up device when the pin is configured as an input. (See 12.8 Port Options.)

1.4.11 Port C I/O Pins (PTC4–PTC0)

PTC4–PTC0 are general-purpose bidirectional I/O port pins. (See Chapter 12 Input/Output (I/O) Ports.) Port C pins are software configurable to be LED Direct Drive ports. Each pin contains a software configurable pull-up device when the pin is configured as an input. (See 12.8 Port Options.)

1.4.12 Port D I/O Pins (PTD7/KBD7–PTD0/KBD0)

PTD7/KBD7–PTD0/KBD0 are general-purpose bidirectional I/O port pins. (See Chapter 12 Input/Output (I/O) Ports.) Any or all of the port D pins can be programmed to serve as external interrupt pins. (See Chapter 15 Keyboard Interrupt Module (KBI).)

1.4.13 Port E I/O Pins (PTE4, PTE3/KBE3, PTE2/KBE2/TCH1, PTE1/KBE1/TCH0, PTE0/KBE0/TCLK)

Port-E is a 5-bit special function port which shares three of its pins with the Timer Interface Module and four of its pins with Keyboard Interrupt Module ((See Chapter 12 Input/Output (I/O) Ports.), (See Chapter 15 Keyboard Interrupt Module (KBI).) and Chapter 11 Timer Interface Module (TIM)). In addition, PTE3-PTE0 has built-in optical coupling interface for optical mouse application. (See Chapter 12 Input/Output (I/O) Ports.)

1.4.14 Port F I/O Pins (PTF7/KBF7–PTF0/KBF0)

PTF7/KBF7–PTF0/KBF0 are general-purpose bidirectional I/O port pins. (See Chapter 12 Input/Output (I/O) Ports.) Any or all of the port F pins can be programmed to serve as external interrupt pins. (See Chapter 15 Keyboard Interrupt Module (KBI).)

Chapter 2
Memory Map

2.1 Introduction

The CPU08 can address 64 Kbytes of memory space. The memory map, shown in Figure 2-1, includes:

- 11,776 bytes of ROM
- 384 bytes of RAM
- 26 bytes of user-defined vectors
- 240 bytes of Monitor ROM

2.2 I/O Section

Addresses $0000–$005F, shown in Figure 2-2, contain most of the control, status, and data registers. Additional I/O registers have the following addresses:

- $FE00 (Break Status Register, BSR)
- $FE01 (Reset Status Register, RSR)
- $FE02 (Reserved)
- $FE03 (Break Flag Control Register, BFCR)
- $FE04 (Interrupt Status Register 1, INT1)
- $FE05 (Interrupt Status Register 2, INT2)
- $FE06 (Reserved)
- $FE07 (Reserved)
- $FE08 (Reserved)
- $FE09 (Reserved)
- $FE0A (Reserved)
- $FE0B (Reserved)
- $FE0C and $FE0D (Break Address Registers, BRKH and BRKL)
- $FE0E (Break Status and Control Register, BSCR)
- $FF8D (Reserved)
- $FFFF (COP Control Register, COPCTL)

$0000 ↓ $005F	I/O REGISTERS (80 BYTES)
$0060 ↓ $01DF	RAM (384 BYTES)
$01E0 ↓ $CDFF	UNIMPLEMENTED (52, 256 BYTES)
$D000 ↓ $FDFF	ROM (11,776 BYTES)
$FE00	BREAK STATUS REGISTER (BSR)
$FE01	RESET STATUS REGISTER (RSR)
$FE02	RESERVED
$FE03	BREAK FLAG CONTROL REGISTER (BFCR)
$FE04	INTERRUPT STATUS REGISTER 1 (INT1)
$FE05	INTERRUPT STATUS REGISTER 2 (INT2)
$FE06	RESERVED
$FE07	RESERVED
$FE08 ↓ $FE0B	RESERVED (4 BYTES)
$FE0C	BREAK ADDRESS HIGH REGISTER (BRKH)
$FE0D	BREAK ADDRESS LOW REGISTER (BRKL)
$FE0E	BREAK STATUS AND CONTROL REGISTER (BSCR)
$FE0F	RESERVED
$FE10 ↓ $FEFF	MONITOR ROM (240 BYTES)
$FF00 ↓	$FF00 to $FF8C UNIMPLEMENTED (141 BYTES)
$FF8D	RESERVED
↓ $FFE5	$FF8E to $FFE5 UNIMPLEMENTED (88 BYTES)
$FFE6 ↓ $FFFF	VECTORS (26 BYTES)

Figure 2-1. Memory Map

Addr.	Name		Bit 7	6	5	4	3	2	1	Bit 0
$0000	Port A Data Register (PTA)	R: W:	PTA7	PTA6	PTA5	PTA4	PTA3	PTA2	PTA1	PTA0
$0001	Port B Data Register (PTB)	R: W:	PTB7	PTB6	PTB5	PTB4	PTB3	PTB2	PTB1	PTB0
$0002	Port C Data Register (PTC)	R: W:	0	0	0	PTC4	PTC3	PTC2	PTC1	PTC0
$0003	Port D Data Register (PTD)	R: W:	PTD7	PTD6	PTD5	PTD4	PTD3	PTD2	PTD1	PTD0
$0004	Data Direction Register A (DDRA)	R: W:	DDRA7	DDRA6	DDRA5	DDRA4	DDRA3	DDRA2	DDRA1	DDRA0
$0005	Data Direction Register B (DDRB)	R: W:	DDRB7	DDRB6	DDRB5	DDRB4	DDRB3	DDRB2	DDRB1	DDRB0
$0006	Data Direction Register C (DDRC)	R: W:	0	0	0	DDRC4	DDRC3	DDRC2	DDRC1	DDRC0
$0007	Data Direction Register D (DDRD)	R: W:	DDRD7	DDRD6	DDRD5	DDRD4	DDRD3	DDRD2	DDRD1	DDRD0
$0008	Port E Data Register (PTE)	R: W:	0	0	0	PTE4	PTE3	PTE2	PTE1	PTE0
$0009	Port F Data Register (PTF)	R: W:	PTF7	PTF6	PTF5	PTF4	PTF3	PTF2	PTF1	PTF0
$000A	Data Direction Register E (DDRE)	R: W:	0	0	0	DDRE4	DDRE3	DDRE2	DDRE1	DDRE0
$000B	Data Direction Register F (DDRF)	R: W:	DDRF7	DDRF6	DDRF5	DDRF4	DDRF3	DDRF2	DDRF1	DDRF0
$000C	Port D Keyboard Status and Control Register (KBDSCR)	R: W:	0	0	0	0	KEYDF	0 ACKD	IMASKD	MODED
$000D	Port D Keyboard Interrupt Enable Register (KBDIER)	R:	KBDIE7	KBDIE6	KBDIE5	KBDIE4	KBDIE3	KBDIE2	KBDIE1	KBDIE0
$000E	Port E Keyboard Status and Control Register (KBESCR)	R: W:	0	0	0	0	KEYEF	0 ACKE	IMASKE	MODEE
$000F	Port E Keyboard Interrupt Enable Register (KBEIER)	R: W:	PEPE3	PEPE2	PEPE1	PEPE0	KBEIE3	KBEIE2	KBEIE1	KBEIE0
$0010	TIM Status and Control Register (TSC)	R: W:	TOF 0	TOIE	TSTOP	0 TRST	0	PS2	PS1	PS0
$0011	Unimplemented	R: W:								
$0012	TIM Counter Register High (TCNTH)	R: W:	Bit 15	14	13	12	11	10	9	Bit 8

= Unimplemented R = Reserved

Figure 2-2. Control, Status, and Data Registers (Sheet 1 of 6)

Addr.	Name		Bit 7	6	5	4	3	2	1	Bit 0
$0013	TIM Counter Register Low (TCNTL)	R:	Bit 7	6	5	4	3	2	1	Bit 0
		W:								
$0014	TIM Counter Modulo Register High (TMODH)	R: W:	Bit 15	14	13	12	11	10	9	Bit 8
$0015	TIM Counter Modulo Register Low (TMODL)	R: W:	Bit 7	6	5	4	3	2	1	Bit 0
$0016	TIM Channel 0 Status and Control Register (TSC0)	R:	CH0F	CH0IE	MS0B	MS0A	ELS0B	ELS0A	TOV0	CH0MAX
		W:	0							
$0017	TIM Channel 0 Register High (TCH0H)	R: W:	Bit 15	14	13	12	11	10	9	Bit 8
$0018	TIM Channel 0 Register Low (TCH0L)	R: W:	Bit 7	6	5	4	3	2	1	Bit 0
$0019	TIM Channel 1 Status and Control Register (TSC1)	R:	CH1F	CH1IE	0	MS1A	ELS1B	ELS1A	TOV1	CH1MAX
		W:	0							
$001A	TIM Channel 1 Register High (TCH1H)	R:	Bit 15	14	13	12	11	10	9	Bit 8
$001B	TIM Channel 1 Register Low (TCH1L)	R:	Bit 7	6	5	4	3	2	1	Bit 0
		W:								
$001C	PORT E Optical Interface Enable Register (EOIER)	R: W:	YREF2	YREF1	YREF0	XREF2	XREF1	XREF0	OIEY	OIEX
$001D	Port Option Control Register (POC)	R:	0	0	LDD	0	0	PCP	PBP	PAP
		W:								
$001E	IRQ Status and Control Register (ISCR)	R:	0	0	0	0	IRQF1	0	IMASK1	MODE1
		W						ACK1		
$001F	Configuration Register (CONFIG) †	R:	0	0	0	0	SSREC	COPRS	STOP	COPD
		W:								
	† One-time writable register									
$0020	USB Embedded Device Endpoint 0 Data Register 0 (DE0D0)	R:	DE0R07	DE0R06	DE0R05	DE0R04	DE0R03	DE0R02	DE0R01	DE0R00
		W:	DE0T07	DE0T06	DE0T05	DE0T04	DE0T03	DE0T02	DE0T01	DE0T00
$0021	USB Embedded Device Endpoint 0 Data Register 1 (DE0D1)	R:	DE0R17	DE0R16	DE0R15	DE0R14	DE0R13	DE0R12	DE0R11	DE0R10
		W:	DE0T17	DE0T16	DE0T15	DE0T14	DE0T13	DE0T12	DE0T11	DE0T10
$0022	USB Embedded Device Endpoint 0 Data Register 2 (DE0D2)	R:	DE0R27	DE0R26	DE0R25	DE0R24	DE0R23	DE0R22	DE0R21	DE0R20
		W:	DE0T27	DE0T26	DE0T25	DE0T24	DE0T23	DE0T22	DE0T21	DE0T20
$0023	USB Embedded Device Endpoint 0 Data Register 3 (DE0D3)	R:	DE0R37	DE0R36	DE0R35	DE0R34	DE0R33	DE0R32	DE0R31	DE0R30
		W:	DE0T37	DE0T36	DE0T35	DE0T34	DE0T33	DE0T32	DE0T31	DE0T30
$0024	USB Embedded Device Endpoint 0 Data Register 4 (DE0D4)	R:	DE0R47	DE0R46	DE0R45	DE0R44	DE0R43	DE0R42	DE0R41	DE0R40
		W:	DE0T47	DE0T46	DE0T45	DE0T44	DE0T43	DE0T42	DE0T41	DE0T40
$0025	USB Embedded Device Endpoint 0 Data Register 5 (DE0D5)	R:	DE0R57	DE0R56	DE0R55	DE0R54	DE0R53	DE0R52	DE0R51	DE0R50
		W:	DE0T57	DE0T56	DE0T55	DE0T54	DE0T53	DE0T52	DE0T51	DE0T50

= Unimplemented R = Reserved

Figure 2-2. Control, Status, and Data Registers (Sheet 2 of 6)

Addr.	Name		Bit 7	6	5	4	3	2	1	Bit 0
$0026	USB Embedded Device Endpoint 0 Data Register 6 (DE0D6)	R:	DE0R67	DE0R66	DE0R65	DE0R64	DE0R63	DE0R62	DE0R61	DE0R60
		W:	DE0T67	DE0T66	DE0T65	DE0T64	DE0T63	DE0T62	DE0T61	DE0T60
$0027	USB Embedded Device Endpoint 0 Data Register 7 (DE0D7)	R:	DE0R77	DE0R76	DE0R75	DE0R74	DE0R73	DE0R72	DE0R71	DE0R70
		W:	DE0T77	DE0T76	DE0T75	DE0T74	DE0T73	DE0T72	DE0T71	DE0T70
$0028	USB Embedded Device Endpoint 1/2 Data Register 0 (DE1D0)	R:								
		W:	DE1T07	DE1T06	DE1T05	DE1T04	DE1T03	DE1T02	DE1T01	DE1T00
$0029	USB Embedded Device Endpoint 1/2 Data Register 1 (DE1D1)	R:								
		W:	DE1T17	DE1T16	DE1T15	DE1T14	DE1T13	DE1T12	DE1T11	DE1T10
$002A	USB Embedded Device Endpoint 1/2 Data Register 2 (DE1D2)	R:								
		W:	DE1T27	DE1T26	DE1T25	DE1T24	DE1T23	DE1T22	DE1T21	DE1T20
$002B	USB Embedded Device Endpoint 1/2 Data Register 3 (DE1D3)	R:								
		W:	DE1T37	DE1T36	DE1T35	DE1T34	DE1T33	DE1T32	DE1T31	DE1T30
$002C	USB Embedded Device Endpoint 1/2 Data Register 4 (DE1D4)	R:								
		W:	DE1T47	DE1T46	DE1T45	DE1T44	DE1T43	DE1T42	DE1T41	DE1T40
$002D	USB Embedded Device Endpoint 1/2 Data Register 5 (DE1D5)	R:								
		W:	DE1T57	DE1T56	DE1T55	DE1T54	DE1T53	DE1T52	DE1T51	DE1T50
$002E	USB Embedded Device Endpoint 1/2 Data Register 6 (DE1D6)	R:								
		W:	DE1T67	DE1T66	DE1T65	DE1T64	DE1T63	DE1T62	DE1T61	DE1T60
$002F	USB Embedded Device Endpoint 1/2 Data Register 7 (DE1D7)	R:								
		W:	DE1T77	DE1T76	DE1T75	DE1T74	DE1T73	DE1T72	DE1T71	DE1T70
$0030	USB HUB Endpoint 0 Data Register 0 (HE0D0)	R:	HE0R07	HE0R06	HE0R05	HE0R04	HE0R03	HE0R02	HE0R01	HE0R00
		W:	HE0T07	HE0T06	HE0T05	HE0T04	HE0T03	HE0T02	HE0T01	HE0T00
$0031	USB HUB Endpoint 0 Data Register 1 (HE0D1)	R:	HE0R17	HE0R16	HE0R15	HE0R14	HE0R13	HE0R12	HE0R11	HE0R10
		W:	HE0T17	HE0T16	HE0T15	HE0T14	HE0T13	HE0T12	HE0T11	HE0T10
$0032	USB HUB Endpoint 0 Data Register 2 (HE0D2)	R:	HE0R27	HE0R26	HE0R25	HE0R24	HE0R23	HE0R22	HE0R21	HE0R20
		W:	HE0T27	HE0T26	HE0T25	HE0T24	HE0T23	HE0T22	HE0T21	HE0T20
$0033	USB HUB Endpoint 0 Data Register 3 (HE0D3)	R:	HE0R37	HE0R36	HE0R35	HE0R34	HE0R33	HE0R32	HE0R31	HE0R30
		W:	HE0T37	HE0T36	HE0T35	HE0T34	HE0T33	HE0T32	HE0T31	HE0T30
$0034	USB HUB Endpoint 0 Data Register 4 (HE0D4)	R:	HE0R47	HE0R46	HE0R45	HE0R44	HE0R43	HE0R42	HE0R41	HE0R40
		W:	HE0T47	HE0T46	HE0T45	HE0T44	HE0T43	HE0T42	HE0T41	HE0T40
$0035	USB HUB Endpoint 0 Data Register 5 (HE0D5)	R:	HE0R57	HE0R56	HE0R55	HE0R54	HE0R53	HE0R52	HE0R51	HE0R50
		W:	HE0T57	HE0T56	HE0T55	HE0T54	HE0T53	HE0T52	HE0T51	HE0T50
$0036	USB HUB Endpoint 0 Data Register 6 (HE0D6)	R:	HE0R67	HE0R66	HE0R65	HE0R64	HE0R63	HE0R62	HE0R61	HE0R60
		W:	HE0T67	HE0T66	HE0T65	HE0T64	HE0T63	HE0T62	HE0T61	HE0T60
$0037	USB HUB Endpoint 0 Data Register 7 (HE0D7)	R:	HE0R77	HE0R76	HE0R75	HE0R74	HE0R73	HE0R72	HE0R71	HE0R70
		W:	HE0T77	HE0T76	HE0T75	HE0T74	HE0T73	HE0T72	HE0T71	HE0T70
$0038	Unimplemented	R:								
		W:								

= Unimplemented R = Reserved

Figure 2-2. Control, Status, and Data Registers (Sheet 3 of 6)

Addr.	Name		Bit 7	6	5	4	3	2	1	Bit 0
$0039	Unimplemented	R: W:								
$003A	PLL Control Register (PCTL)	R: W:	PLLIE	PLLF	PLLON	BCS	PRE1	PRE0	0	0
$003B	PLL Bandwidth Control Register (PBWC)	R: W:	AUTO	LOCK	$\overline{\text{ACQ}}$	0	0	0	0	0
$003C	PLL Multiplier Select Register High (PMSH)	R: W:					MUL11	MUL10	MUL9	MUL8
$003D	PLL Multiplier Select Register Low (PMSL)	R: W:	MUL7	MUL6	MUL5	MUL4	MUL3	MUL2	MUL1	MUL0
$003E	Unimplemented	R: W:								
$003F	PLL Reference Divider Select Register (PRDS)	R: W:					RDS3	RDS2	RDS1	RDS0
$0040	Port F Keyboard Status and Control Register (KBFSCR)	R: W:	0	0	0	0	KEYFF	0 ACKF	IMASKF	MODEF
$0041	Port F Keyboard Interrupt Enable Register (KBFIER)	R: W:	KBFIE7	KBFIE6	KBFIE5	KBFIE4	KBFIE3	KBFIE2	KBFIE1	KBFIE0
$0042	Port F Pull-up Enable Register (PFPER)	R: W:	PFPE7	PFPE6	PFPE5	PFPE4	PFPE3	PFPE2	PFPE1	PFPE0
$0043	Unimplemented	R: W:								
$0044	Unimplemented	R: W:								
$0045	Unimplemented	R: W:								
$0046	Unimplemented	R: W:								
$0047	USB Embedded Device Control Register 2 (DCR2)	R: W:	0	0	0	0	ENABLE2	ENABLE1	DSTALL2	DSTALL1
$0048	USB Embedded Device Address Register (DADDR)	R: W:	DEVEN	DADD6	DADD5	DADD4	DADD3	DADD2	DADD1	DADD0
$0049	USB Embedded Device Interrupt Register 0 (DIR0)	R: W:	TXD0F	RXD0F	0	0	TXD0IE	RXD0IE	0 TXD0FR	0 RXD0FR
$004A	USB Embedded Device Interrupt Register 1 (DIR1)	R: W:	TXD1F	0	0	0	TXD1IE	0	0 TXD1FR	0
$004B	USB Embedded Device Control Register 0 (DCR0)	R: W:	T0SEQ	DSTALL0	TX0E	RX0E	TP0SIZ3	TP0SIZ2	TP0SIZ1	TP0SIZ0

= Unimplemented R = Reserved

Figure 2-2. Control, Status, and Data Registers (Sheet 4 of 6)

Addr.	Name		Bit 7	6	5	4	3	2	1	Bit 0
$004C	USB Embedded Device Control Register 1 (DCR1)	R:	T1SEQ	ENDADD	TX1E	0	TP1SIZ3	TP1SIZ2	TP1SIZ1	TP1SIZ0
		W:								
$004D	USB Embedded Device Status Register (DSR)	R:	DRSEQ	DSETUP	DTX1ST	0	RP0SIZ3	RP0SIZ2	RP0SIZ1	RP0SIZ0
		W:				DTX1STR				
$004E	Unimplemented	R:								
		W:								
$004F	Unimplemented	R:								
		W:								
$0050	Unimplemented	R:								
		W:								
$0051	USB HUB Downstream Port 1 Control Register (HDP1CR)	R:	PEN1	LOWSP1	RST1	RESUM1	SUSP1	0	D1+	D1–
		W:								
$0052	USB HUB Downstream Port 2 Control Register (HDP2CR)	R:	PEN2	LOWSP2	RST2	RESUM2	SUSP2	0	D2+	D2–
		W:								
$0053	USB HUB Downstream Port 3 Control Register (HDP3CR)	R:	PEN3	LOWSP3	RST3	RESUM3	SUSP3	0	D3+	D3–
		W:								
$0054	USB HUB Downstream Port 4 Control Register (HDP4CR)	R:	PEN4	LOWSP4	RST4	RESUM4	SUSP4	0	D4+	D4–
		W:								
$0055	Unimplemented	R:								
		W:								
$0056	USB SIE Timing Interrupt Register (SIETIR)	R:	SOFF	EOF2F	EOPF	TRANF	SOFIE	EOF2IE	EOPIE	TRANIE
		W:								
$0057	USB SIE Timing Status Register (SIETSR)	R:	RSTF	0	LOCKF	0	0	0	0	0
		W:		RSTFR		LOCKFR	SOFFR	EOF2FR	EOPFR	TRANFR
$0058	USB HUB Address Register (HADDR)	R:	USBEN	ADD6	ADD5	ADD4	ADD3	ADD2	ADD1	ADD0
		W:								
$0059	USB HUB Interrupt Register 0 (HIR0)	R:	TXDF	RXDF	0	0	TXDIE	RXDIE	0	0
		W:							TXDFR	RXDFR
$005A	Unimplemented	R:								
		W:								
$005B	USB HUB Control Register 0 (HCR0)	R:	TSEQ	STALL0	TXE	RXE	TPSIZ3	TPSIZ2	TPSIZ1	TPSIZ0
		W:								
$005C	USB HUB Endpoint1 Control & Data Register (HCDR)	R:	STALL1	PNEW	PCHG5	PCHG4	PCHG3	PCHG2	PCHG1	PCHG0
		W:								
$005D	USB HUB Status Register (HSR)	R:	RSEQ	SETUP	TX1ST	0	RPSIZ3	RPSIZ2	RPSIZ1	RPSIZ0
		W:				TX1STR				
$005E	USB HUB Root Port Control Register (HRPCR)	R:	0	0	0	RESUM0	SUSPND	0	D0+	D0–
		W:								

= Unimplemented R = Reserved

Figure 2-2. Control, Status, and Data Registers (Sheet 5 of 6)

Addr.	Name		Bit 7	6	5	4	3	2	1	Bit 0
$005F	Unimplemented	R:								
		W:								
$FE00	Break Status Register (BSR)	R:	R	R	R	R	R	R	SBSW	R
		W:								
$FE01	Reset Status Register (RSR)	R:	POR	PIN	COP	ILOP	ILAD	USB	0	0
		W:								
$FE02	Reserved	R:								
		W:								
$FE03	Break Flag Control Register (BFCR)	R:	BCFE	R	R	R	R	R	R	R
		W:								
$FE04	Interrupt Status Register 1 (INT1)	R:	IF6	IF5	IF4	IF3	IF2	IF1	0	0
		W:	R	R	R	R	R	R	R	R
$FE05	Interrupt Status Register 2 (INT2)	R:	0	0	0	IF11	IF10	IF9	IF8	IF7
		W:	R	R	R	R	R	R	R	R
$FE06	Reserved	R:								
		W:								
$FE07	Reserved	R:								
		W:								
$FE08	Unimplemented	R:								
		W:								
$FE09	Unimplemented	R:								
		W:								
$FE0A	Unimplemented	R:								
		W:								
$FE0B	Unimplemented	R:								
		W:								
$FE0C	Break Address Register High (BRKH)	R:	Bit 15	14	13	12	11	10	9	Bit 8
		W:								
$FE0D	Break Address Register Low (BRKL)	R:	Bit 7	6	5	4	3	2	1	Bit 0
		W:								
$FE0E	Break Status and Control Register (BRKSCR)	R:	BRKE	BRKA	0	0	0	0	0	0
		W:								
$FF8D	Reserved	R:								
		W:								
$FFFF	COP Control Register (COPCTL)	R:	Low byte of reset vector							
		W:	Writing clears COP counter (any value)							

= Unimplemented R = Reserved

Figure 2-2. Control, Status, and Data Registers (Sheet 6 of 6)

Table 2-1 is a list of vector locations.

Table 2-1. Vector Addresses

	Address	Vector
Low	$FFE6	PLL Vector (High)
	$FFE7	PLL Vector (Low)
	$FFE8	Port-F Keyboard Vector (High)
	$FFE9	Port-F Keyboard Vector (Low)
	$FFEA	Port-D Keyboard Vector (High)
	$FFEB	Port-D Keyboard Vector (Low)
	$FFEC	Port-E Keyboard Vector (High)
	$FFED	Port-E Keyboard Vector (Low)
	$FFEE	TIM Overflow Vector (High)
	$FFEF	TIM Overflow Vector (Low)
	$FFF0	TIM Channel 1 Vector (High)
Priority	$FFF1	TIM Channel 1 Vector (Low)
	$FFF2	TIM Channel 0 Vector (High)
	$FFF3	TIM Channel 0 Vector (Low)
	$FFF4	USB Device Endpoint Interrupt Vector (High)
	$FFF5	USB Device Endpoint Interrupt Vector (Low)
	$FFF6	USB HUB Endpoint Interrupt Vector (High)
	$FFF7	USB HUB Endpoint Interrupt Vector (Low)
	$FFF8	USB SIE Timing Interrupt Vector (High)
	$FFF9	USB SIE Timing Interrupt Vector (Low)
	$FFFA	IRQ1 Vector (High)
	$FFFB	IRQ1 Vector (Low)
	$FFFC	SWI Vector (High)
	$FFFD	SWI Vector (Low)
	$FFFE	Reset Vector (High)
High	$FFFF	Reset Vector (Low)

2.3 Monitor ROM

The 240 bytes at addresses $FE10–$FEFF are reserved ROM addresses that contain the instructions for the monitor functions. (See Chapter 10 Monitor ROM (MON).)

Chapter 3
Random-Access Memory (RAM)

3.1 Introduction

This section describes the 384 bytes of RAM.

3.2 Functional Description

Addresses $0060 through $01DF are RAM locations. The location of the stack RAM is programmable. The 16-bit stack pointer allows the stack to be anywhere in the 64-Kbyte memory space.

NOTE

For correct operation, the stack pointer must point only to RAM locations.

Within page zero are 160 bytes of RAM. Because the location of the stack RAM is programmable, all page zero RAM locations can be used for I/O control and user data or code. When the stack pointer is moved from its reset location at $00FF, direct addressing mode instructions can access efficiently all page zero RAM locations. Page zero RAM, therefore, provides ideal locations for frequently accessed global variables.

Before processing an interrupt, the CPU uses five bytes of the stack to save the contents of the CPU registers.

NOTE

For M6805 compatibility, the H register is not stacked.

During a subroutine call, the CPU uses two bytes of the stack to store the return address. The stack pointer decrements during pushes and increments during pulls.

NOTE

Be careful when using nested subroutines. The CPU may overwrite data in the RAM during a subroutine or during the interrupt stacking operation.

Chapter 4
Read-Only Memory (ROM)

4.1 Introduction

This section describes the 11,776 bytes of read-only memory (ROM) and 26 bytes of user vectors, available on the MC68HC08KH12A device (ROM part).

4.2 Functional Description

These addresses are user ROM locations:

$D000 – $FDFF

$FFE6 – $FFFF (These locations are reserved for user-defined interrupt and reset vectors.)

NOTE

A security feature prevents viewing of the ROM contents.[1]

1. No security feature is absolutely secure. However, Freescale's strategy is to make reading or copying the ROM contents difficult for unauthorized users.

Chapter 5
Configuration Register (CONFIG)

5.1 Introduction

This section describes the configuration register (CONFIG). The configuration register enables or disables the following options:

- Stop mode recovery time (32 CGMXCLK cycles or 4096 CGMXCLK cycles)
- STOP instruction
- Computer operating properly module (COP)
- COP reset period (COPRS), $(2^{13}-2^{4})\times$CGMXCLK or $(2^{18}-2^{4})\times$CGMXCLK

5.2 Functional Description

The configuration register is used in the initialization of various options. The configuration register can be written once after each reset. All of the configuration register bits are cleared during reset. Since the various options affect the operation of the MCU it is recommended that this register be written immediately after reset. The configuration register is located at $001F. The configuration register may be read at anytime.

NOTE

The CONFIG register is a special register containing one-time writable latches after each reset. Upon a reset, the CONFIG register defaults to the predetermined settings as shown in Figure 5-1

.

Address: $001F

	Bit 7	6	5	4	3	2	1	Bit 0
Read:	0	0	0	0	SSREC	COPRS	STOP	COPD
Write:								
Reset:	0	0	0	0	0	0	0	0

= Unimplemented

Figure 5-1. Configuration Register (CONFIG)

SSREC — Short stop recovery bit

SSREC enables the CPU to exit stop mode with a delay of 32 CGMXCLK cycles instead of a 4096 CGMXCLK cycle delay.

1 = Stop mode recovery after 32 CGMXCLK cycles
0 = Stop mode recovery after 4096 CGMXCLK cycles

NOTE

Exiting stop mode by pulling reset will result in the long stop recovery. If using an external crystal, do not set the SSREC bit.

COPRS — COP reset period selection bit

1 = COP reset cycle is $(2^{13}-2^{4})\times$CGMXCLK
0 = COP reset cycle is $(2^{18}-2^{4})\times$CGMXCLK

STOP — STOP instruction enable bit

STOP enables the STOP instruction.

1 = STOP instruction enabled
0 = STOP instruction treated as illegal opcode

COPD — COP disable bit

COPD disables the COP module. See Chapter 13 Computer Operating Properly (COP).

1 = COP module disabled
0 = COP module enabled

Chapter 6
Central Processor Unit (CPU)

This section describes the central processor unit. The M68HC08 CPU is an enhanced and fully object-code-compatible version of the M68HC05 CPU. The *CPU08 Reference Manual* (Freescale document number CPU08RM/AD) contains a description of the CPU instruction set, addressing modes, and architecture.

6.1 Features

Features of the CPU include the following:

- Full Upward, Object-Code Compatibility with M68HC05 Family
- 16-Bit Stack Pointer with Stack Manipulation Instructions
- 16-Bit Index Register with X-Register Manipulation Instructions
- 6-MHz CPU Internal Bus Frequency
- 64-Kbyte Program/Data Memory Space
- 16 Addressing Modes
- Memory-to-Memory Data Moves Without Using Accumulator
- Fast 8-Bit by 8-Bit Multiply and 16-Bit by 8-Bit Divide Instructions
- Enhanced Binary-Coded Decimal (BCD) Data Handling
- Modular Architecture with Expandable Internal Bus Definition for Extension of Addressing Range Beyond 64 Kbytes
- Low-Power Stop and Wait Modes

6.2 CPU Registers

Figure 6-1 shows the five CPU registers. CPU registers are not part of the memory map.

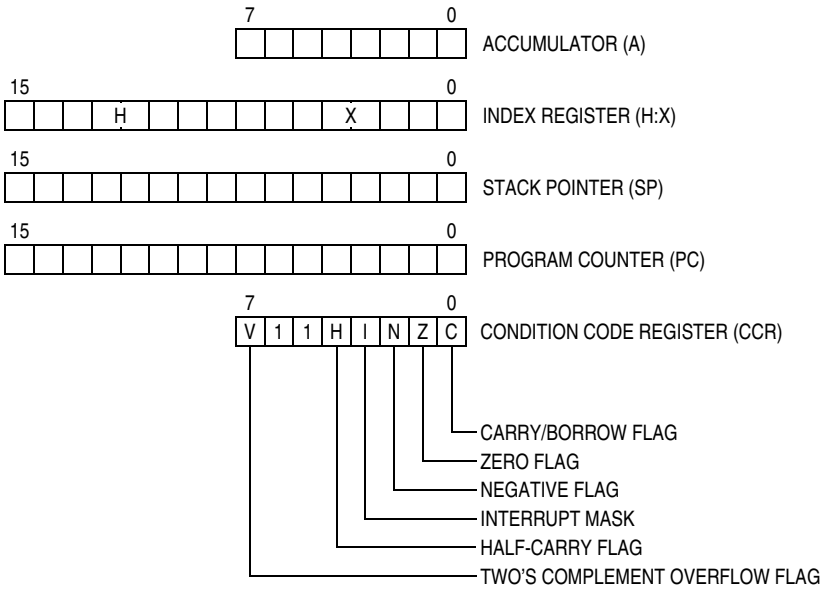

Figure 6-1. CPU Registers

6.2.1 Accumulator (A)

The accumulator is a general-purpose 8-bit register. The CPU uses the accumulator to hold operands and the results of arithmetic/logic operations.

	Bit 7	6	5	4	3	2	1	Bit 0
Read:								
Write:								
Reset:	Unaffected by reset							

Figure 6-2. Accumulator (A)

6.2.2 Index Register (H:X)

The 16-bit index register allows indexed addressing of a 64-Kbyte memory space. H is the upper byte of the index register, and X is the lower byte. H:X is the concatenated 16-bit index register.

In the indexed addressing modes, the CPU uses the contents of the index register to determine the conditional address of the operand.

	Bit 15	14	13	12	11	10	9	8	7	6	5	4	3	2	1	Bit 0
Read:																
Write:																
Reset:	0	0	0	0	0	0	0	0	X	X	X	X	X	X	X	X

X = Indeterminate

Figure 6-3. Index Register (H:X)

The index register can serve also as a temporary data storage location.

6.2.3 Stack Pointer (SP)

The stack pointer is a 16-bit register that contains the address of the next location on the stack. During a reset, the stack pointer is preset to $00FF. The reset stack pointer (RSP) instruction also sets the least significant byte to $FF but does not affect the most significant byte. The stack pointer decrements as data is pushed onto the stack and increments as data is pulled from the stack.

In the stack pointer 8-bit offset and 16-bit offset addressing modes, the stack pointer can function as an index register to access data on the stack. The CPU uses the contents of the stack pointer to determine the conditional address of the operand.

	Bit 15	14	13	12	11	10	9	8	7	6	5	4	3	2	1	Bit 0
Read:																
Write:																
Reset:	0	0	0	0	0	0	0	0	1	1	1	1	1	1	1	1

Figure 6-4. Stack Pointer (SP)

NOTE

The location of the stack is arbitrary and may be relocated anywhere in RAM. Moving the SP out of page zero ($0000 to $00FF) frees direct address (page zero) space. For correct operation, the stack pointer must point only to RAM locations.

6.2.4 Program Counter (PC)

The program counter is a 16-bit register that contains the address of the next instruction or operand to be fetched.

Normally, the program counter automatically increments to the next sequential memory location every time an instruction or operand is fetched. Jump, branch, and interrupt operations load the program counter with an address other than that of the next sequential location.

During reset, the program counter is loaded with the reset vector address located at $FFFE and $FFFF. The vector address is the address of the first instruction to be executed after exiting the reset state.

	Bit 15	14	13	12	11	10	9	8	7	6	5	4	3	2	1	Bit 0
Read:																
Write:																
Reset:	Loaded with vector from $FFFE and $FFFF															

Figure 6-5. Program Counter (PC)

6.2.5 Condition Code Register (CCR)

The 8-bit condition code register contains the interrupt mask and five flags that indicate the results of the instruction just executed. Bits 6 and 5 are set permanently to logic one. The following paragraphs describe the functions of the condition code register.

	Bit 7	6	5	4	3	2	1	Bit 0
Read: Write:	V	1	1	H	I	N	Z	C
Reset:	X	1	1	X	1	X	X	X

X = Indeterminate

Figure 6-6. Condition Code Register (CCR)

V — Overflow Flag

The CPU sets the overflow flag when a two's complement overflow occurs. The signed branch instructions BGT, BGE, BLE, and BLT use the overflow flag.

1 = Overflow
0 = No overflow

H — Half-Carry Flag

The CPU sets the half-carry flag when a carry occurs between accumulator bits 3 and 4 during an ADD or ADC operation. The half-carry flag is required for binary-coded decimal (BCD) arithmetic operations. The DAA instruction uses the states of the H and C flags to determine the appropriate correction factor.

1 = Carry between bits 3 and 4
0 = No carry between bits 3 and 4

I — Interrupt Mask

When the interrupt mask is set, all maskable CPU interrupts are disabled. CPU interrupts are enabled when the interrupt mask is cleared. When a CPU interrupt occurs, the interrupt mask is set automatically after the CPU registers are saved on the stack, but before the interrupt vector is fetched.

1 = Interrupts disabled
0 = Interrupts enabled

NOTE

To maintain M6805 compatibility, the upper byte of the index register (H) is not stacked automatically. If the interrupt service routine modifies H, then the user must stack and unstack H using the PSHH and PULH instructions.

After the I bit is cleared, the highest-priority interrupt request is serviced first.

A return from interrupt (RTI) instruction pulls the CPU registers from the stack and restores the interrupt mask from the stack. After any reset, the interrupt mask is set and can only be cleared by the clear interrupt mask software instruction (CLI).

N — Negative flag

The CPU sets the negative flag when an arithmetic operation, logic operation, or data manipulation produces a negative result, setting bit 7 of the result.

1 = Negative result
0 = Non-negative result

Z — Zero flag

The CPU sets the zero flag when an arithmetic operation, logic operation, or data manipulation produces a result of $00.

1 = Zero result
0 = Non-zero result

C — Carry/Borrow Flag

The CPU sets the carry/borrow flag when an addition operation produces a carry out of bit 7 of the accumulator or when a subtraction operation requires a borrow. Some instructions — such as bit test and branch, shift, and rotate — also clear or set the carry/borrow flag.

1 = Carry out of bit 7
0 = No carry out of bit 7

6.3 Arithmetic/Logic Unit (ALU)

The ALU performs the arithmetic and logic operations defined by the instruction set.

Refer to the *CPU08 Reference Manual* (Freescale document number CPU08RM/AD) for a description of the instructions and addressing modes and more detail about CPU architecture.

Chapter 7
System Integration Module (SIM)

7.1 Introduction

This section describes the system integration module (SIM), which supports up to 24 external and/or internal interrupts. Together with the CPU, the SIM controls all MCU activities. A block diagram of the SIM is shown in Figure 7-1. Figure 7-2 is a summary of the SIM I/O registers. The SIM is a system state controller that coordinates CPU and exception timing. The SIM is responsible for:

- Bus clock generation and control for CPU and peripherals
  - top/wait/reset/break entry and recovery
  - Internal clock control
- Master reset control, including power-on reset (POR) and COP timeout
- Interrupt control:
  - Acknowledge timing
  - Arbitration control timing
  - Vector address generation
- CPU enable/disable timing
- Modular architecture expandable to 128 interrupt sources

Table 7-1 shows the internal signal names used in this section.

Table 7-1. Signal Name Conventions

Signal Name	Description
CGMXCLK	Buffered OSC1 from the oscillator
CGMOUT	The CGMXCLK frequency divided by two. This signal is again divided by two in the SIM to generate the internal bus clocks (Bus clock = CGMXCLK divided by four)
IAB	Internal address bus
IDB	Internal data bus
PORRST	Signal from the power-on reset module to the SIM
IRST	Internal reset signal
R/$\overline{W}$	Read/write signal

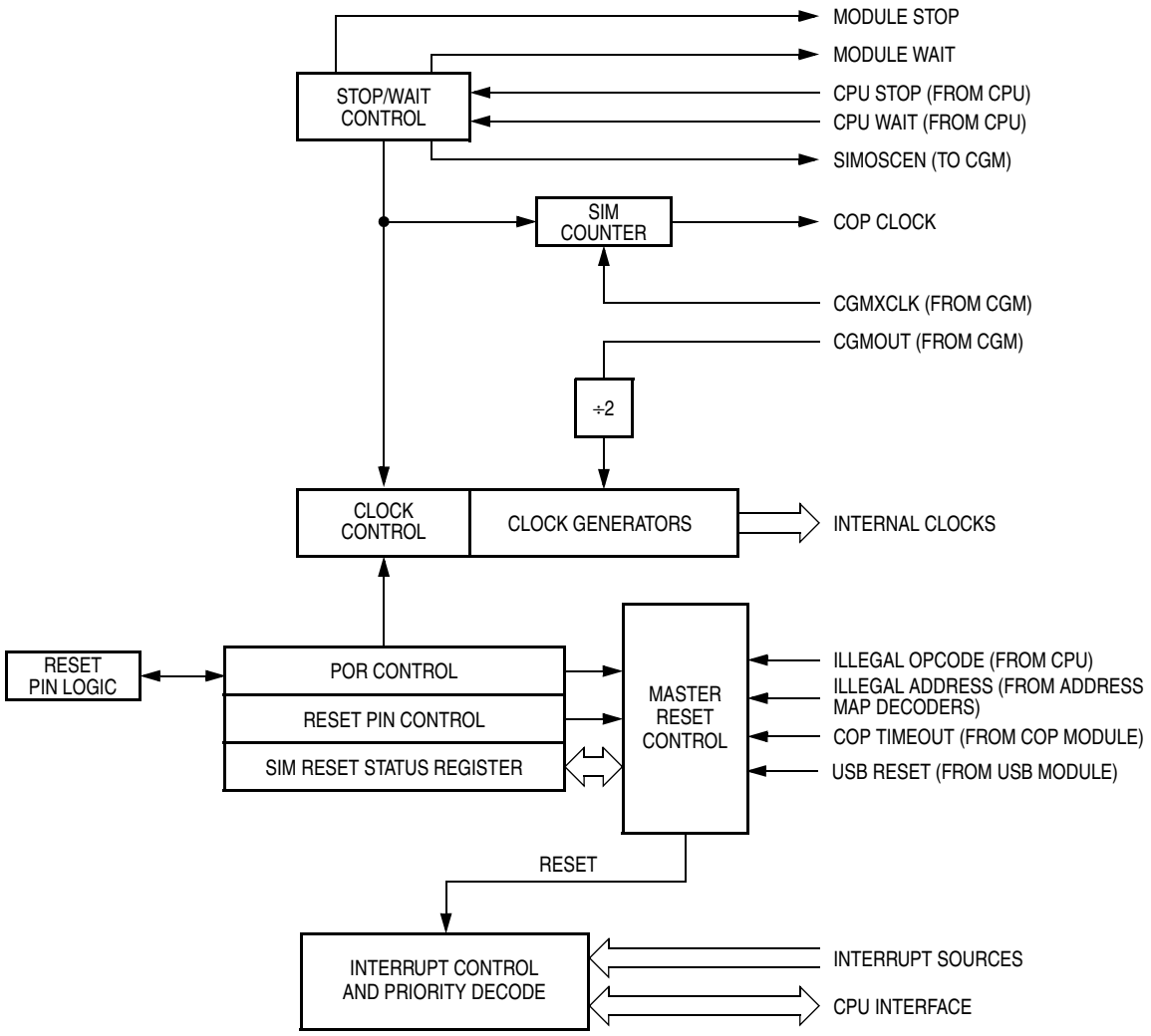

Figure 7-1. SIM Block Diagram

Addr.	Register Name		Bit 7	6	5	4	3	2	1	Bit 0
$FE00	Break Status Register (BSR)	Read: Write:	R	R	R	R	R	R	SBSW	R
		Reset:							0	
$FE01	Reset Status Register (RSR)	Read:	POR	PIN	COP	ILOP	ILAD	USB	0	0
		Write:								
		Reset:	1	0	0	0	0	0	0	0
$FE03	Break Flag Control Register (BFCR)	Read: Write:	BCFE	R	R	R	R	R	R	R
		Reset:	0							

= Unimplemented R = Reserved for factory test

Figure 7-2. SIM I/O Register Summary

Addr.	Register Name		Bit 7	6	5	4	3	2	1	Bit 0
$FE04	Interrupt Status Register 1 (INT1)	Read:	IF6	IF5	IF4	IF3	IF2	IF1	0	0
		Write:	R	R	R	R	R	R	R	R
		Reset:	0	0	0	0	0	0	0	0
$FE05	Interrupt Status Register 2 (INT2)	Read:	0	0	0	IF11	IF10	IF9	IF8	IF7
		Write:	R	R	R	R	R	R	R	R
		Reset:	0	0	0	0	0	0	0	0
$FE06	Interrupt Status Register 3 (INT3)	Read:	0	0	0	0	0	0	0	0
		Write:	R	R	R	R	R	R	R	R
		Reset:	0	0	0	0	0	0	0	0

= Unimplemented R = Reserved for factory test

Figure 7-2. SIM I/O Register Summary (Continued)

7.2 SIM Bus Clock Control and Generation

The bus clock generator provides system clock signals for the CPU and peripherals on the MCU. The system clocks are generated from an incoming clock, CGMOUT, as shown in Figure 7-3.

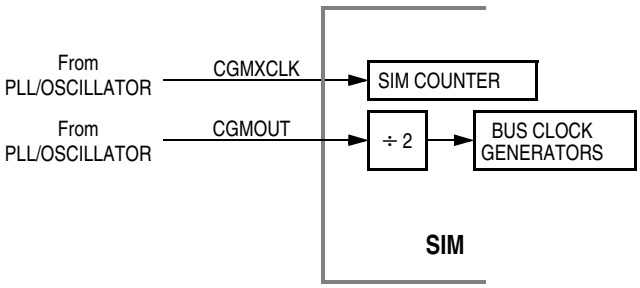

Figure 7-3. SIM Clock Signals

7.2.1 Bus Timing

In user mode, the internal bus frequency is the oscillator frequency (CGMXCLK) divided by four.

7.2.2 Clock Start-Up from POR

When the power-on reset module generates a reset, the clocks to the CPU and peripherals are inactive and held in an inactive phase until after the 4096 CGMXCLK cycle POR timeout has completed. The $\overline{\text{RST}}$ pin is driven low by the SIM during this entire period. The IBUS clocks start upon completion of the timeout.

7.2.3 Clocks in Stop Mode and Wait Mode

Upon exit from stop mode by an interrupt, break, or reset, the SIM allows CGMXCLK to clock the SIM counter. The CPU and peripheral clocks do not become active until after the stop delay timeout. This timeout is selectable as 4096 or 32 CGMXCLK cycles. (See 7.6.2 Stop Mode.)

In wait mode, the CPU clocks are inactive. The SIM also produces two sets of clocks for other modules. Refer to the wait mode subsection of each module to see if the module is active or inactive in wait mode. Some modules can be programmed to be active in wait mode.

7.3 Reset and System Initialization

The MCU has these reset sources:

- Power-on reset module (POR)
- External reset pin ($\overline{RST}$)
- Computer operating properly module (COP)
- Illegal opcode
- Illegal address
- Universal Serial Bus module (USB)

All of these resets produce the vector $FFFE–FFFF ($FEFE–FEFF in monitor mode) and assert the internal reset signal (IRST). IRST causes all registers to be returned to their default values and all modules to be returned to their reset states.

An internal reset clears the SIM counter (see 7.4 SIM Counter), but an external reset does not. Each of the resets sets a corresponding bit in the reset status register (RSR). (See 7.7 SIM Registers.)

7.3.1 External Pin Reset

The $\overline{RST}$ pin circuits include an internal pullup device. Pulling the asynchronous $\overline{RST}$ pin low halts all processing. The PIN bit of the reset status register (RSR) is set as long as $\overline{RST}$ is held low for a minimum of 67 CGMXCLK cycles, assuming that the POR was not the source of the reset. See Table 7-2 for details. Figure 7-4 shows the relative timing.

Table 7-2. PIN Bit Set Timing

Reset Type	Number of Cycles Required to Set PIN
POR	4163 (4096 + 64 + 3)
All others	67 (64 + 3)

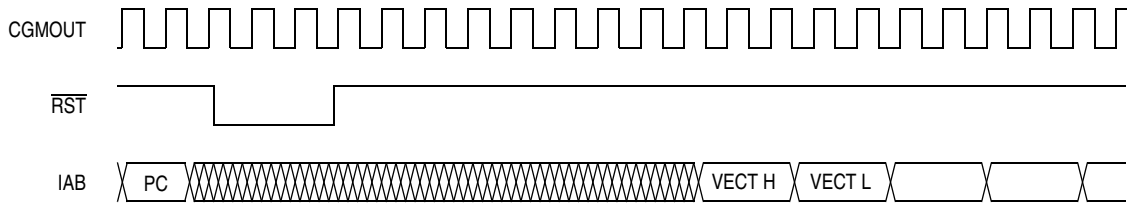

Figure 7-4. External Reset Timing

7.3.2 Active Resets from Internal Sources

All internal reset sources actively pull the $\overline{RST}$ pin low for 32 CGMXCLK cycles to allow resetting of external peripherals. The internal reset signal IRST continues to be asserted for an additional 32 cycles. See Figure 7-5. An internal reset can be caused by an illegal address, illegal opcode, COP timeout, or POR. (See Figure 7-6.) Note that for POR resets, the SIM cycles through 4096 CGMXCLK cycles during

which the SIM forces the $\overline{RST}$ pin low. The internal reset signal then follows the sequence from the falling edge of $\overline{RST}$ shown in Figure 7-5.

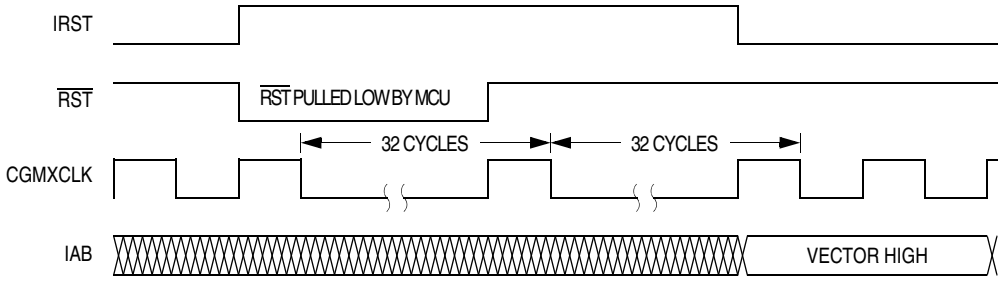

Figure 7-5. Internal Reset Timing

The COP reset is asynchronous to the bus clock.

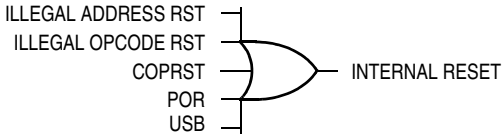

Figure 7-6. Sources of Internal Reset

The active reset feature allows the part to issue a reset to peripherals and other chips within a system built around the MCU.

7.3.2.1 Power-On Reset

When power is first applied to the MCU, the power-on reset module (POR) generates a pulse to indicate that power-on has occurred. The external reset pin ($\overline{RST}$) is held low while the SIM counter counts out 4096 CGMXCLK cycles. Sixty-four CGMXCLK cycles later, the CPU and memories are released from reset to allow the reset vector sequence to occur. At power-on, the following events occur:

- A POR pulse is generated.
- The internal reset signal is asserted.
- The SIM enables the oscillator to drive CGMXCLK.
- Internal clocks to the CPU and modules are held inactive for 4096 CGMXCLK cycles to allow stabilization of the oscillator.
- The $\overline{RST}$ pin is driven low during the oscillator stabilization time.
- The POR bit of the reset status register (RSR) is set and all other bits in the register are cleared.

7.3.2.2 Computer Operating Properly (COP) Reset

An input to the SIM is reserved for the COP reset signal. The overflow of the COP counter causes an internal reset and sets the COP bit in the reset status register (RSR). The SIM actively pulls down the $\overline{RST}$ pin for all internal reset sources.

To prevent a COP module timeout, write any value to location $FFFF. Writing to location $FFFF clears the COP counter and stages 12 through 5 of the SIM counter. The SIM counter output, which occurs at least every $2^{12} – 2^4$ CGMXCLK cycles, drives the COP counter. The COP should be serviced as soon as possible out of reset to guarantee the maximum amount of time before the first timeout.

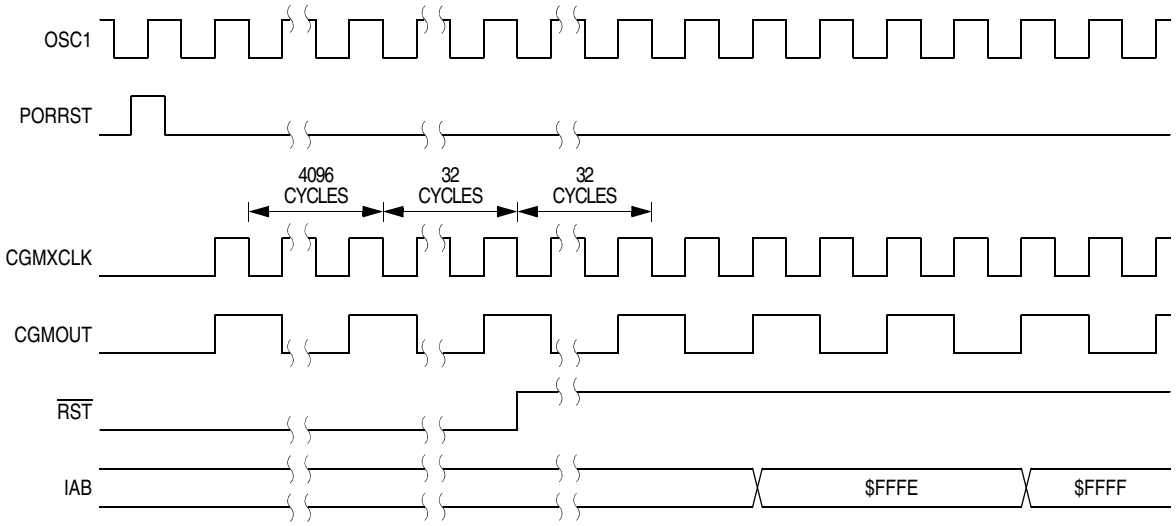

Figure 7-7. POR Recovery

The COP module is disabled if the $\overline{RST}$ pin or the $\overline{IRQ1}/V_{PP}$ pin is held at $V_{DD} + V_{HI}$ while the MCU is in monitor mode. The COP module can be disabled only through combinational logic conditioned with the high voltage signal on the $\overline{RST}$ or the $\overline{IRQ1}/V_{PP}$ pin. This prevents the COP from becoming disabled as a result of external noise. During a break state, $V_{DD} + V_{HI}$ on the $\overline{RST}$ pin disables the COP module.

7.3.2.3 Illegal Opcode Reset

The SIM decodes signals from the CPU to detect illegal instructions. An illegal instruction sets the ILOP bit in the reset status register (RSR) and causes a reset.

If the stop enable bit, STOP, in the mask option register is logic zero, the SIM treats the STOP instruction as an illegal opcode and causes an illegal opcode reset. The SIM actively pulls down the $\overline{RST}$ pin for all internal reset sources.

7.3.2.4 Illegal Address Reset

An opcode fetch from an unmapped address generates an illegal address reset. The SIM verifies that the CPU is fetching an opcode prior to asserting the ILAD bit in the reset status register (RSR) and resetting the MCU. A data fetch from an unmapped address does not generate a reset. The SIM actively pulls down the $\overline{RST}$ pin for all internal reset sources.

7.3.2.5 Universal Serial Bus Reset

The USB module will detect a reset signal on the bus by the presence of an extended SE0 at the USB data pins of the upstream port. The reset signaling is specified to be present for a minimum of 10 ms. An active device (powered and not in the suspend state) seeing a single-ended zero on its USB data inputs for more than 2.5µs may treat that signal as a reset, but must have interpreted the signaling as a reset within 5.5 µs. For USB device, an SE0 condition between 4 and 8 low speed bit times or 32 and 64 high speed bit times represents a valid USB reset. After the reset is removed, the device will be in the attached, but not yet addressed or configured state (refer to Section 9.1 of the USB specification). The device must be able to accept device address via a SET_ADDRESS command (refer to section 9.4 of the USB specification) no later than 10 ms after the reset is removed.

Reset can wake a device from the suspended mode. A device may take up to 10 ms to wake up from the suspended state.

7.4 SIM Counter

The SIM counter is used by the power-on reset module (POR) and in stop mode recovery to allow the oscillator time to stabilize before enabling the internal bus (IBUS) clocks. The SIM counter also serves as a prescalar for the computer operating properly module (COP). The SIM counter uses 12 stages for counting, followed by a 13th stage that triggers a reset of SIM counters and supplies the clock for the COP module. The SIM counter is clocked by the falling edge of CGMXCLK.

7.4.1 SIM Counter During Power-On Reset

The power-on reset module (POR) detects power applied to the MCU. At power-on, the POR circuit asserts the signal PORRST. Once the SIM is initialized, it enables the oscillator to drive the bus clock state machine.

7.4.2 SIM Counter During Stop Mode Recovery

The SIM counter also is used for stop mode recovery. The STOP instruction clears the SIM counter. After an interrupt, break, or reset, the SIM senses the state of the short stop recovery bit, SSREC, in the mask option register. If the SSREC bit is a logic one, then the stop recovery is reduced from the normal delay of 4096 CGMXCLK cycles down to 32 CGMXCLK cycles. This is ideal for applications using canned oscillators that do not require long start-up times from stop mode. External crystal applications should use the full stop recovery time, that is, with SSREC cleared in the configuration register (CONFIG).

7.4.3 SIM Counter and Reset States

External reset has no effect on the SIM counter. (See 7.6.2 Stop Mode for details.) The SIM counter is free-running after all reset states. (See 7.3.2 Active Resets from Internal Sources for counter control and internal reset recovery sequences.)

7.5 Exception Control

Normal, sequential program execution can be changed in three different ways:

- Interrupts
  - Maskable hardware CPU interrupts
  - Non-maskable software interrupt instruction (SWI)
- Reset
- Break interrupts

7.5.1 Interrupts

An interrupt temporarily changes the sequence of program execution to respond to a particular event. Figure 7-8 flow charts the handling of system interrupts.

Interrupts are latched, and arbitration is performed in the SIM at the start of interrupt processing. The arbitration result is a constant that the CPU uses to determine which vector to fetch. Once an interrupt is latched by the SIM, no other interrupt can take precedence, regardless of priority, until the latched interrupt is serviced (or the I bit is cleared).

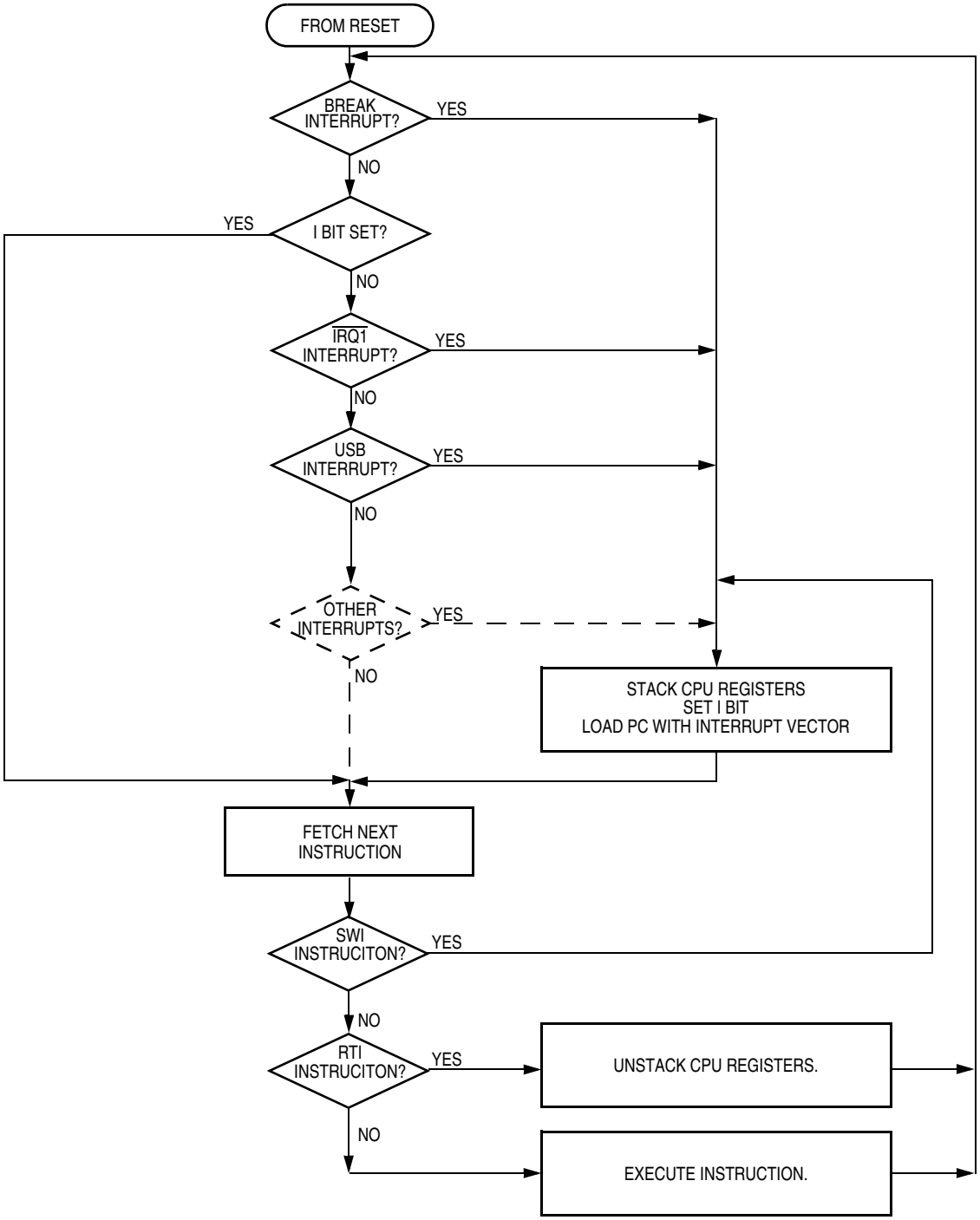

Figure 7-8. Interrupt Processing

At the beginning of an interrupt, the CPU saves the CPU register contents on the stack and sets the interrupt mask (I bit) to prevent additional interrupts. At the end of an interrupt, the RTI instruction recovers the CPU register contents from the stack so that normal processing can resume. Figure 7-9 shows interrupt entry timing. Figure 7-10 shows interrupt recovery timing.

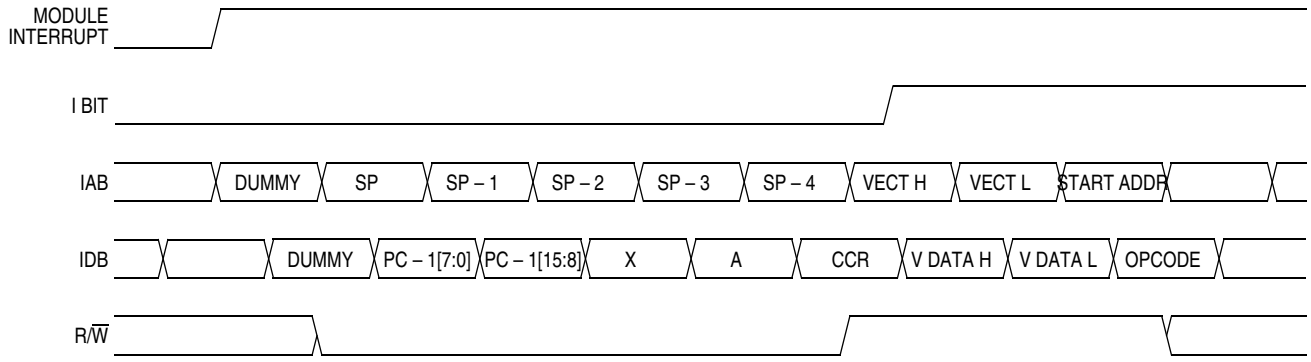

Figure 7-9. Interrupt Entry

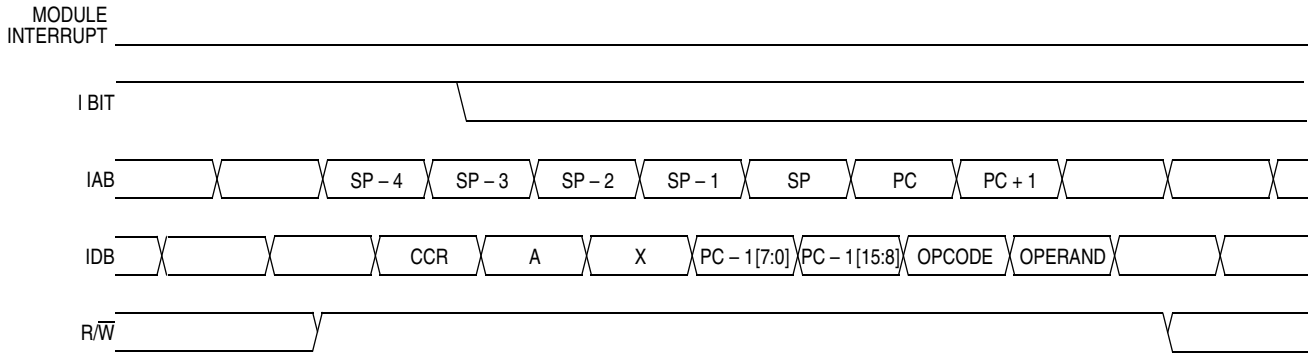

Figure 7-10. Interrupt Recovery

7.5.1.1 Hardware Interrupts

A hardware interrupt does not stop the current instruction. Processing of a hardware interrupt begins after completion of the current instruction. When the current instruction is complete, the SIM checks all pending hardware interrupts. If interrupts are not masked (I bit clear in the condition code register), and if the corresponding interrupt enable bit is set, the SIM proceeds with interrupt processing; otherwise, the next instruction is fetched and executed.

If more than one interrupt is pending at the end of an instruction execution, the highest priority interrupt is serviced first. Figure 7-11 demonstrates what happens when two interrupts are pending. If an interrupt is pending upon exit from the original interrupt service routine, the pending interrupt is serviced before the LDA instruction is executed.

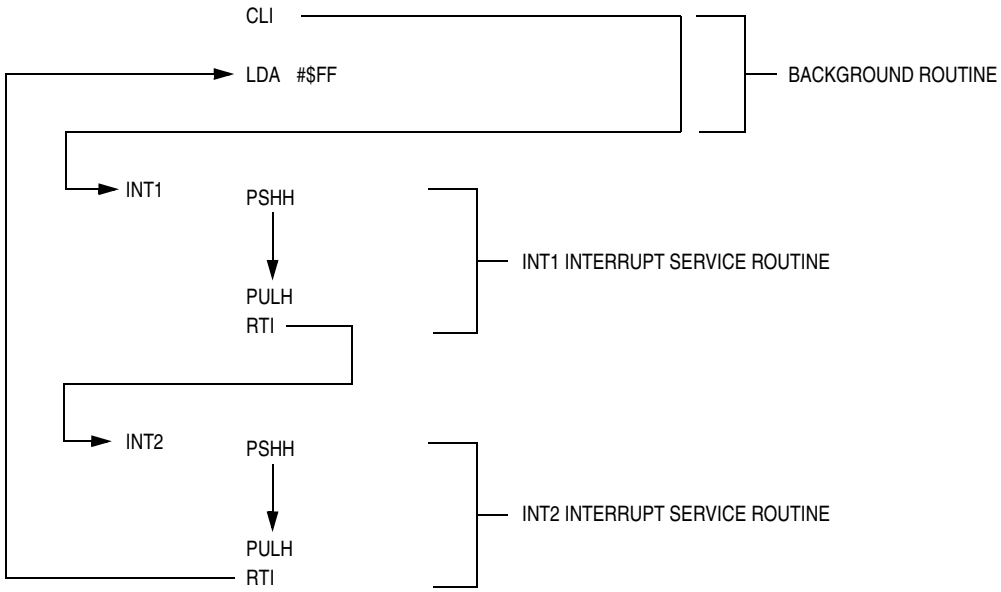

Figure 7-11. Interrupt Recognition Example

The LDA opcode is prefetched by both the INT1 and INT2 RTI instructions. However, in the case of the INT1 RTI prefetch, this is a redundant operation.

NOTE

To maintain compatibility with the M6805 Family, the H register is not pushed on the stack during interrupt entry. If the interrupt service routine modifies the H register or uses the indexed addressing mode, software should save the H register and then restore it prior to exiting the routine.

7.5.1.2 SWI Instruction

The SWI instruction is a non-maskable instruction that causes an interrupt regardless of the state of the interrupt mask (I bit) in the condition code register.

NOTE

A software interrupt pushes PC onto the stack. A software interrupt does ***not*** *push PC – 1, as a hardware interrupt does.*

7.5.2 Interrupt Status Registers

The flags in the interrupt status registers identify maskable interrupt sources. Table 7-3 summarizes the interrupt sources and the interrupt status register flags that they set. The interrupt status registers can be useful for debugging.

Table 7-3. Interrupt Sources

Source	Flag	Mask(1)	INT Register Flag	Priority(2)	Vector Address
SWI Instruction			—	0	$FFFC–$FFFD
$\overline{\text{IRQ1}}$ Pin	IRQF1	IMASK1	IF1	1	$FFFA–$FFFB
HUB Start of Frame Interrupt	SOFF	SOFIE	IF2	2	$FFF8–$FFF9
HUB 2nd End of Frame Point Interrupt	EOF2F	EOF2IE			
HUB End of Packet Interrupt	EOPF	EOPIE			
HUB Bus Signal Transition Detect Interrupt	TRANF	TRANIE			
HUB Endpoint0 Transmit Interrupt	TXDF	TXDIE	IF3	3	$FFF6–$FFF7
HUB Endpoint0 Receive Interrupt	RXDF	RXDIE			
Device Endpoint 0 Transmit Interrupt	TXD0F	TXD0IE	IF4	4	$FFF4–$FFF5
Device Endpoint 0 Receive Interrupt	RXD0F	RXD0IE			
USB Endpoint1/2 Transmit Interrupt	TXD1F	TXD1IE			
TIM Channel 0	CH0F	CH0IE	IF5	5	$FFF2–$FFF3
TIM Channel 1	CH1F	CH1IE	IF6	6	$FFF0–$FFF1
TIM Overflow	TOF	TOIE	IF7	7	$FFEE–$FFEF
Port-E Keyboard Pin Interrupt	KEYEF	IMASKE	IF8	8	$FFEC–$FFED
Port-D Keyboard Pin Interrupt	KEYDF	IMASKD	IF9	9	$FFEA–$FFEB
Port-F Keyboard Pin Interrupt	KEYFF	IMASKF	IF10	10	$FFE8–$FFE9
Phase-locked Loop Interrupt	PLLF	PLLIE	IF11	11	$FFE6–$FFE7

(1) The I bit in the condition code register is a global mask for all interrupts sources except the SWI instruction.
(2) 0= highest priority

7.5.2.1 Interrupt Status Register 1

Address: $FE04

	Bit 7	6	5	4	3	2	1	Bit 0
Read:	IF6	IF5	IF4	IF3	IF2	IF1	0	0
Write:	R	R	R	R	R	R	R	R
Reset:	0	0	0	0	0	0	0	0

R = Reserved

Figure 7-12. Interrupt Status Register 1 (INT1)

IF6–IF1 — Interrupt Flags 1–6

These flags indicate the presence of interrupt requests from the sources shown in Table 7-3.

1 = Interrupt request present
0 = No interrupt request present

Bit 0 and Bit 1 — Always read 0

7.5.2.2 Interrupt Status Register 2

Address: $FE05

	Bit 7	6	5	4	3	2	1	Bit 0
Read:	0	0	0	IF11	IF10	IF9	IF8	IF7
Write:	R	R	R	R	R	R	R	R
Reset:	0	0	0	0	0	0	0	0

R = Reserved

Figure 7-13. Interrupt Status Register 2 (INT2)

IF11–IF7 — Interrupt Flags 11–7

These flags indicate the presence of interrupt requests from the sources shown in Table 7-3.

1 = Interrupt request present
0 = No interrupt request present

7.5.2.3 Interrupt Status Register 3

Address: $FE06

	Bit 7	6	5	4	3	2	1	Bit 0
Read:	0	0	0	0	0	0	0	0
Write:	R	R	R	R	R	R	R	R
Reset:	0	0	0	0	0	0	0	0

R = Reserved

Figure 7-14. Interrupt Status Register 2 (INT2)

Bits 7–0 — Always read 0

7.5.3 Reset

All reset sources always have equal and highest priority and cannot be arbitrated.

7.5.4 Break Interrupts

The break module can stop normal program flow at a software-programmable break point by asserting its break interrupt output. (See Chapter 16 Break Module (BRK).) The SIM puts the CPU into the break state by forcing it to the SWI vector location. Refer to the break interrupt subsection of each module to see how each module is affected by the break state.

7.5.5 Status Flag Protection in Break Mode

The SIM controls whether status flags contained in other modules can be cleared during break mode. The user can select whether flags are protected from being cleared by properly initializing the break clear flag enable bit (BCFE) in the break flag control register (BFCR).

Protecting flags in break mode ensures that set flags will not be cleared while in break mode. This protection allows registers to be freely read and written during break mode without losing status flag information.

Setting the BCFE bit enables the clearing mechanisms. Once cleared in break mode, a flag remains cleared even when break mode is exited. Status flags with a two-step clearing mechanism — for example, a read of one register followed by the read or write of another — are protected, even when the first step is accomplished prior to entering break mode. Upon leaving break mode, execution of the second step will clear the flag as normal.

7.6 Low-Power Modes

Executing the WAIT or STOP instruction puts the MCU in a low-power-consumption mode for standby situations. The SIM holds the CPU in a non-clocked state. The operation of each of these modes is described below. Both STOP and WAIT clear the interrupt mask (I) in the condition code register, allowing interrupts to occur.

7.6.1 Wait Mode

In wait mode, the CPU clocks are inactive while the peripheral clocks continue to run. Figure 7-15 shows the timing for wait mode entry.

A module that is active during wait mode can wake up the CPU with an interrupt if the interrupt is enabled. Stacking for the interrupt begins one cycle after the WAIT instruction during which the interrupt occurred. In wait mode, the CPU clocks are inactive. Refer to the wait mode subsection of each module to see if the module is active or inactive in wait mode. Some modules can be programmed to be active in wait mode.

Wait mode can also be exited by a reset or break. A break interrupt during wait mode sets the SIM break stop/wait bit, SBSW, in the break status register (BSR). If the COP disable bit, COPD, in the mask option register is logic zero, then the computer operating properly module (COP) is enabled and remains active in wait mode.

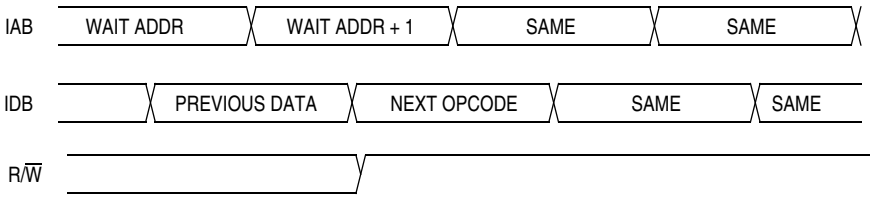

NOTE: Previous data can be operand data or the WAIT opcode, depending on the last instruction.

Figure 7-15. Wait Mode Entry Timing

Figure 7-16 and Figure 7-17 show the timing for WAIT recovery.

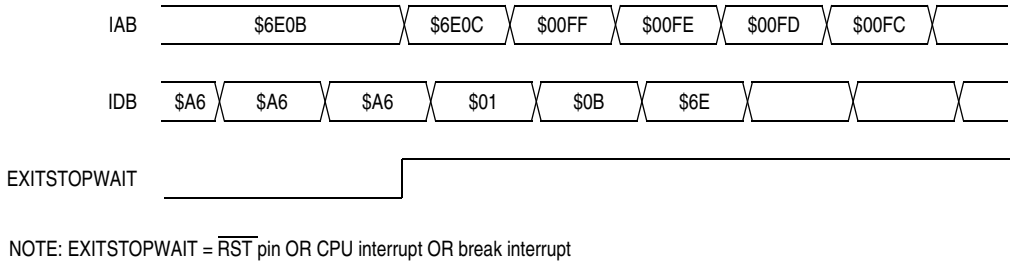

Figure 7-16. Wait Recovery from Interrupt or Break

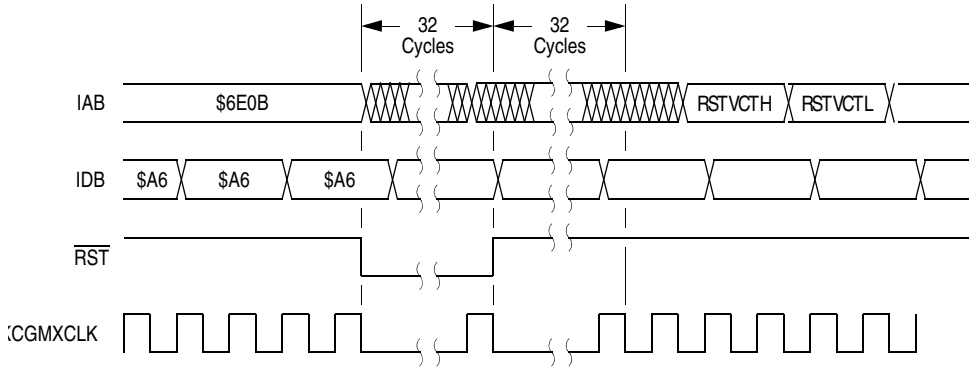

Figure 7-17. Wait Recovery from Internal Reset

7.6.2 Stop Mode

In stop mode, the SIM counter is reset and the system clocks are disabled. An interrupt request from a module can cause an exit from stop mode. Stacking for interrupts begins after the selected stop recovery time has elapsed. Reset or break also causes an exit from stop mode.

The SIM disables the oscillator signals (CGMOUT and CGMXCLK) in stop mode, stopping the CPU and peripherals. Stop recovery time is selectable using the SSREC bit in the configuration register (CONFIG). If SSREC is set, stop recovery is reduced from the normal delay of 4096 CGMXCLK cycles down to 32. This is ideal for applications using canned oscillators that do not require long startup times from stop mode.

NOTE

External crystal applications should use the full stop recovery time by clearing the SSREC bit.

A break interrupt during stop mode sets the SIM break stop/wait bit (SBSW) in the break status register (BSR).

The SIM counter is held in reset from the execution of the STOP instruction until the beginning of stop recovery. It is then used to time the recovery period. Figure 7-18 shows stop mode entry timing.

NOTE

To minimize stop current, all pins configured as inputs should be driven to a logic 1 or logic 0.

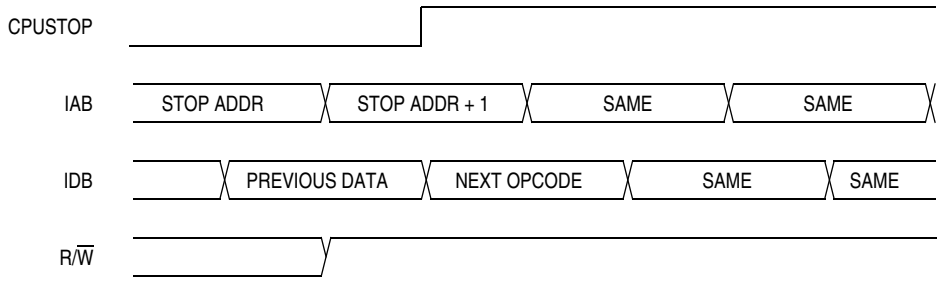

NOTE: Previous data can be operand data or the STOP opcode, depending on the last instruction.

Figure 7-18. Stop Mode Entry Timing

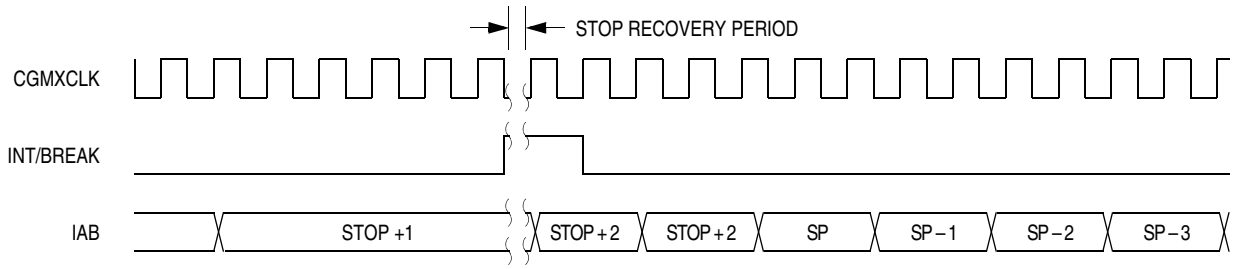

Figure 7-19. Stop Mode Recovery from Interrupt or Break

7.7 SIM Registers

The SIM has three memory mapped registers. Table 7-4 shows the mapping of these registers.

Table 7-4. SIM Registers

Address	Register	Access Mode
$FE00	BSR	User
$FE01	RSR	User
$FE03	BFCR	User

7.7.1 Break Status Register (BSR)

The break status register contains a flag to indicate that a break caused an exit from stop or wait mode.

Address: $FE00

	Bit 7	6	5	4	3	2	1	Bit 0
Read:	R	R	R	R	R	R	SBSW	R
Write:							Note 1	
Reset:							0	

R = Reserved

1. Writing a logic zero clears SBSW

Figure 7-20. Break Status Register (BSR)

SBSW — SIM Break Stop/Wait

This status bit is useful in applications requiring a return to wait or stop mode after exiting from a break interrupt. Clear SBSW by writing a logic zero to it. Reset clears SBSW.

1 = Stop mode or wait mode was exited by break interrupt
0 = Stop mode or wait mode was not exited by break interrupt

SBSW can be read within the break state SWI routine. The user can modify the return address on the stack by subtracting one from it. The following code is an example of this. Writing zero to the SBSW bit clears it.

```
; This code works if the H register has been pushed onto the stack in the break
; service routine software. This code should be executed at the end of the
; break service routine software.
  HIBYTE   EQU    5
  LOBYTE   EQU    6
;          If not SBSW, do RTI
           BRCLR  SBSW,BSR, RETURN   ; See if wait mode or stop mode was exited
                                     ; by break
           TST    LOBYTE,SP          ; If RETURNLO is not zero,
           BNE    DOLO               ; then just decrement low byte.
           DEC    HIBYTE,SP          ; Else deal with high byte, too.
  DOLO     DEC    LOBYTE,SP          ; Point to WAIT/STOP opcode.
  RETURN   PULH                      ; Restore H register.
           RTI
```

7.7.2 Reset Status Register (RSR)

This register contains six flags that show the source of the last reset. Clear the SIM reset status register by reading it. A power-on reset sets the POR bit and clears all other bits in the register.

Address: $FE01

	Bit 7	6	5	4	3	2	1	Bit 0
Read:	POR	PIN	COP	ILOP	ILAD	USB	0	0
Write:								
POR:	1	0	0	0	0	0	0	0

= Unimplemented

Figure 7-21. Reset Status Register (RSR)

POR — Power-On Reset Bit

1 = Last reset caused by POR circuit
0 = Read of RSR

PIN — External Reset Bit

1 = Last reset caused by external reset pin ($\overline{RST}$)
0 = POR or read of RSR

COP — Computer Operating Properly Reset Bit

1 = Last reset caused by COP counter
0 = POR or read of RSR

ILOP — Illegal Opcode Reset Bit

1 = Last reset caused by an illegal opcode
0 = POR or read of RSR

ILAD — Illegal Address Reset Bit (opcode fetches only)

1 = Last reset caused by an opcode fetch from an illegal address
0 = POR or read of RSR

USB —Universal Serial Bus Reset Bit

1 = Last reset caused by an USB module
0 = POR or read of RSR

7.7.3 Break Flag Control Register (BFCR)

The break control register contains a bit that enables software to clear status bits while the MCU is in a break state.

Address: $FE03

	Bit 7	6	5	4	3	2	1	Bit 0
Read: Write:	BCFE	R	R	R	R	R	R	R
Reset:	0	0	0	0	0	0	0	0

R = Reserved

Figure 7-22. Break Flag Control Register (BFCR)

BCFE — Break Clear Flag Enable Bit

This read/write bit enables software to clear status bits by accessing status registers while the MCU is in a break state. To clear status bits during the break state, the BCFE bit must be set.

1 = Status bits clearable during break
0 = Status bits not clearable during break

Chapter 8
Clock Generator Module (CGM)

8.1 Introduction

This section describes the clock generator module (CGM). The CGM generates the crystal clock signal, CGMXCLK, which operates at the frequency of the crystal. The CGM also generates the base clock signal, CGMOUT, which is based on either the crystal clock divided by two or the phase-locked loop (PLL) clock, CGMPCLK, divided by two. This is the clock from which the SIM derives the system clocks, including the bus clock, which is at a frequency of CGMOUT/2. The PLL also generates a CGMVCLK clock, at 48MHz, for use as the USBCLK. The PLL is a fully functional frequency generator designed for use with crystals or ceramic resonators.

This CGM is optimized to generate a 48MHz reference frequency for the USB module, from a 6MHz crystal.

8.2 Features

Features of the CGM include:

- VCO Center-Of-Range Frequency tuned to 48MHz for Low-Jitter Clock Reference for USB Module
- Low-Frequency Crystal Operation with Low-Power Operation and High-Output Frequency Resolution
- Programmable Reference Divider for Even Greater Resolution
- Programmable Prescaler for Power-of-Two Increases in Bus Frequency
- Automatic Bandwidth Control Mode for Low-Jitter Operation
- Automatic Frequency Lock Detector
- CPU Interrupt on Entry or Exit from Locked Condition

8.3 Functional Description

The CGM consists of three major submodules:

- Crystal oscillator circuit — The crystal oscillator circuit generates the constant crystal frequency clock, CGMXCLK.
- Phase-locked loop (PLL) — The PLL generates the programmable VCO frequency clock, CGMVCLK and CGMPCLK.
- Base clock selector circuit — This software-controlled circuit selects either CGMXCLK divided by two or the PLL clock, CGMPCLK, divided by two as the base clock, CGMOUT. The SIM derives the system clocks from CGMOUT.

Figure 8-1 shows the structure of the CGM.

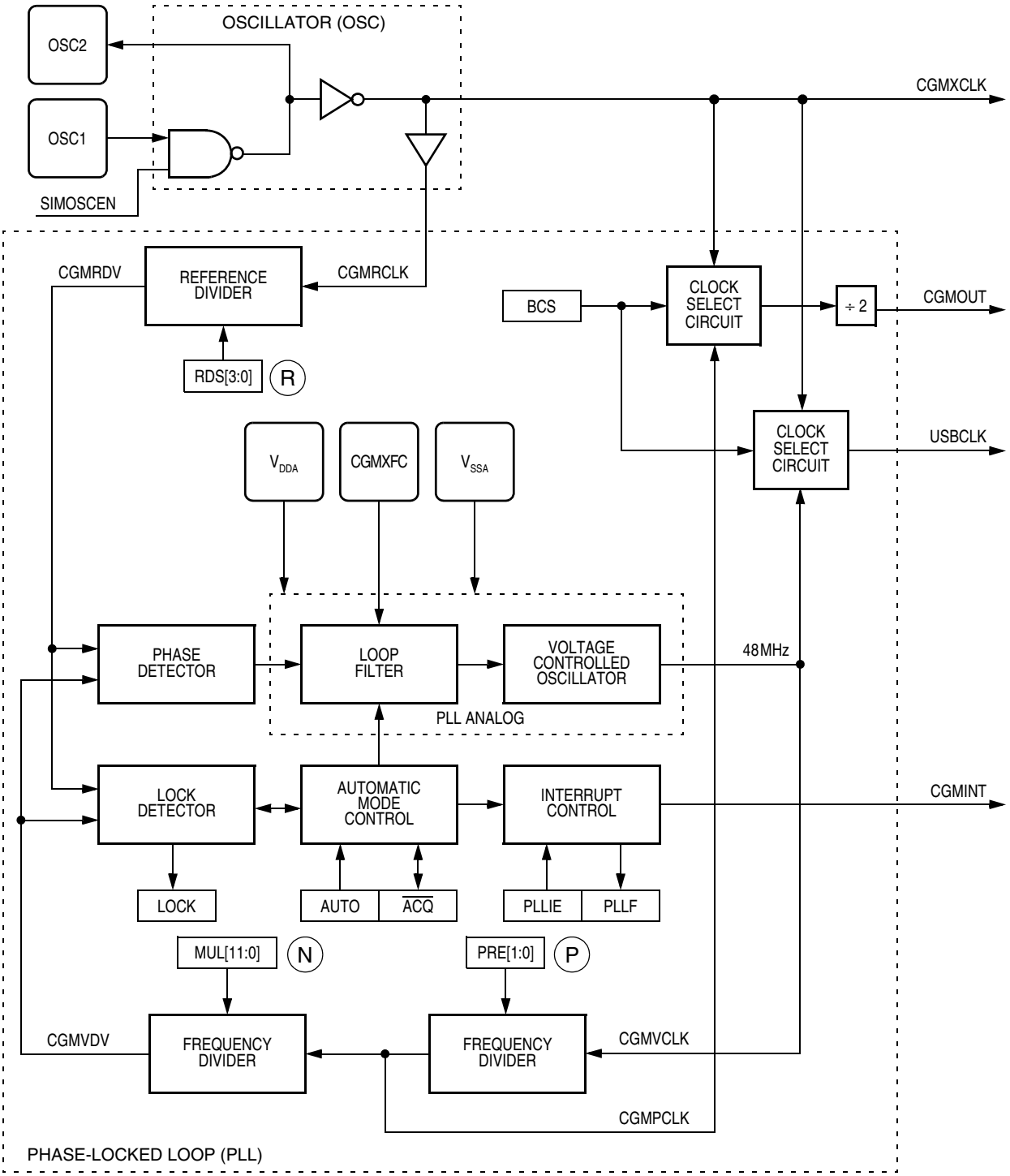

Figure 8-1. CGM Block Diagram

8.3.1 Crystal Oscillator Circuit

The crystal oscillator circuit consists of an inverting amplifier and an external crystal. The OSC1 pin is the input to the amplifier and the OSC2 pin is the output. The SIMOSCEN signal from the system integration module (SIM) enables the crystal oscillator circuit.

The CGMXCLK signal is the output of the crystal oscillator circuit and runs at a rate equal to the crystal frequency. CGMXCLK is then buffered to produce CGMRCLK, the PLL reference clock.

CGMXCLK can be used by other modules which require precise timing for operation. The duty cycle of CGMXCLK is not guaranteed to be 50% and depends on external factors, including the crystal and related external components. An externally generated clock also can feed the OSC1 pin of the crystal oscillator circuit. Connect the external clock to the OSC1 pin and let the OSC2 pin float.

8.3.2 Phase-Locked Loop Circuit (PLL)

The PLL is a frequency generator that can operate in either acquisition mode or tracking mode, depending on the accuracy of the output frequency. The PLL can change between acquisition and tracking modes either automatically or manually.

8.3.3 PLL Circuits

The PLL consists of these circuits:

- Voltage-controlled oscillator (VCO)
- Reference divider
- Frequency prescaler
- Modulo VCO frequency divider
- Phase detector
- Loop filter
- Lock detector

The operating range of the VCO is programmable for a wide range of frequencies and for maximum immunity to external noise, including supply and CGM/XFC noise. The VCO frequency is bound to a range from roughly 40MHz to 56MHz, f_{VRS}. Modulating the voltage on the CGM/XFC pin changes the frequency within this range. By design, f_{VRS} is tuned to a nominal center-of-range frequency of 48MHz.

CGMRCLK is the PLL reference clock, a buffered version of CGMXCLK. CGMRCLK runs at a frequency, f_{RCLK}, and is fed to the PLL through a programmable modulo reference divider, which divides f_{RCLK} by a factor R. This feature allows frequency steps of higher resolution. The divider's output is the final reference clock, CGMRDV, running at a frequency $f_{RDV} = f_{RCLK}/R$.

The VCO's output clock, CLK, running at a frequency f_{VCLK} is fed back through a programmable prescale divider and a programmable modulo divider. The prescaler divides the VCO clock by a power-of-two factor P and the modulo divider reduces the VCO clock by a factor, N. The dividers' output is the VCO feedback clock, CGMVDV, running at a frequency $f_{VDV} = f_{VCLK}/(N \times 2^P)$. (See 8.3.6 Programming the PLL for more information.)

The phase detector then compares the VCO feedback clock, CGMVDV, with the final reference clock, CGMRDV. A correction pulse is generated based on the phase difference between the two signals. The loop filter then slightly alters the DC voltage on the external capacitor connected to CGM/XFC based on the width and direction of the correction pulse. The filter can make fast or slow corrections depending on

its mode, described in 8.3.4 Acquisition and Tracking Modes. The value of the external capacitor and the reference frequency determines the speed of the corrections and the stability of the PLL.

The lock detector compares the frequencies of the VCO feedback clock, CGMVDV, and the final reference clock, CGMRDV. Therefore, the speed of the lock detector is directly proportional to the final reference frequency, f_{RDV}. The circuit determines the mode of the PLL and the lock condition based on this comparison.

8.3.4 Acquisition and Tracking Modes

The PLL filter is manually or automatically configurable into one of two operating modes:

- Acquisition mode — In acquisition mode, the filter can make large frequency corrections to the VCO. This mode is used at PLL startup or when the PLL has suffered a severe noise hit and the VCO frequency is far off the desired frequency. When in acquisition mode, the $\overline{ACQ}$ bit is clear in the PLL bandwidth control register. (See 8.5.2 PLL Bandwidth Control Register (PBWC).)
- Tracking mode — In tracking mode, the filter makes only small corrections to the frequency of the VCO. PLL jitter is much lower in tracking mode, but the response to noise is also slower. The PLL enters tracking mode when the VCO frequency is nearly correct, such as when the PLL is selected as the base clock source. (See 8.3.8 Base Clock Selector Circuit.) The PLL is automatically in tracking mode when not in acquisition mode or when the $\overline{ACQ}$ bit is set.

8.3.5 Manual and Automatic PLL Bandwidth Modes

This CGM is optimized for Automatic PLL Bandwidth Mode, and is the mode recommended for most users.

In automatic bandwidth control mode (AUTO=1), the lock detector automatically switches between acquisition and tracking modes. Automatic bandwidth control mode also is used to determine when the VCO clock, CGMVCLK, is safe to use as the source for the base clock, CGMOUT. (See 8.5.2 PLL Bandwidth Control Register (PBWC).) If PLL interrupts are enabled, the software can wait for a PLL interrupt request and then check the LOCK bit. If interrupts are disabled, software can poll the LOCK bit continuously (during PLL startup, usually) or at periodic intervals. In either case, when the LOCK bit is set, the VCO clock is safe to use as the source for the base clock. (See 8.3.8 Base Clock Selector Circuit.) If the VCO is selected as the source for the base clock and the LOCK bit is clear, the PLL has suffered a severe noise hit and the software must take appropriate action, depending on the application. (See 8.6 Interrupts for information and precautions on using interrupts.) The following conditions apply when the PLL is in automatic bandwidth control mode:

- The $\overline{ACQ}$ bit (See 8.5.2 PLL Bandwidth Control Register (PBWC).) is a read-only indicator of the mode of the filter. (See 8.3.4 Acquisition and Tracking Modes.)
- The $\overline{ACQ}$ bit is set when the VCO frequency is within a certain tolerance, Δ_{TRK}, and is cleared when the VCO frequency is out of a certain tolerance, Δ_{UNT}. (See 8.8 Acquisition/Lock Time Specifications for more information.)
- The LOCK bit is a read-only indicator of the locked state of the PLL.
- The LOCK bit is set when the VCO frequency is within a certain tolerance, Δ_{LOCK}, and is cleared when the VCO frequency is out of a certain tolerance Δ_{UNL}. (See 8.8 Acquisition/Lock Time Specifications for more information.)
- CPU interrupts can occur if enabled (PLLIE = 1) when the PLL's lock condition changes, toggling the LOCK bit. (See 8.5.1 PLL Control Register (PCTL).)

8.3.6 Programming the PLL

The following procedure shows how to program the PLL.

1. Choose the desired bus frequency, f_{BUS}.

   The relationship between the VCO frequency f_{VCLK} and the bus frequency f_{BUS} is

   $$\frac{f_{VCLK}}{2^P} = 4 \times f_{BUS}$$

   The VCO frequency need to be at 48MHz for the USB module reference clock.

   $$\frac{48MHz}{2^P} = 4 \times f_{BUS}$$

   Choose P = 0, 1, 2, or 3 for a bus frequency of 12MHz, 6MHz, 3MHz, or 1.5MHz respectively.

2. Choose a practical PLL (crystal) reference frequency, f_{RCLK}, and the reference clock divider, R.

   Frequency errors to the PLL are corrected at a rate of f_{RCLK}/R. For stability and lock time reduction, this rate must be as fast as possible. The VCO frequency must be an integer multiple of this rate. The relationship between the VCO frequency f_{VCLK} and the reference frequency f_{RCLK} is

   $$f_{VCLK} = \frac{2^P \times N}{R}(f_{RCLK})$$

   $$\text{hence:} \quad 48MHz = \frac{2^P \times N}{R}(f_{RCLK})$$

   Choose the reference divider R = 1 for fast lock. Choose a f_{RCLK} frequency with an integer divisor of f_{BUS} and solve for N.

3. Program the PLL registers accordingly:
   a. In the PRE bits of the PLL control register (PCTL), program the binary equivalent of P.
   b. In the PLL multiplier select register low (PMSL) and the PLL multiplier select register high (PMSH), program the binary equivalent of N.
   c. In the PLL reference divider select register (PRDS), program the binary coded equivalent of R.

Table 8-1 provides a numeric example (numbers are in hexadecimal notation):

Table 8-1. CGM Numeric Example

f_{BUS}	f_{RCLK}	P	N	R
6MHz	6MHz	1	004	1

8.3.7 Special Programming Exceptions

The programming method described in 8.3.6 Programming the PLL does not account for three possible exceptions. A value of zero for R, N, or L is meaningless when used in the equations given. To account for these exceptions:

A zero value for R or N is interpreted exactly the same as a value of one. A zero value for L disables the PLL and prevents its selection as the source for the base clock. (See 8.3.8 Base Clock Selector Circuit.)

8.3.8 Base Clock Selector Circuit

This circuit is used to select either the crystal clock, CGMXCLK, or the PLL clock, CGMPCLK, as the source of the base clock, CGMOUT. The two input clocks go through a transition control circuit that waits up to three CGMXCLK cycles and three CGMPCLK cycles to change from one clock source to the other. During this time, CGMOUT is held in stasis. The output of the transition control circuit is then divided by two to correct the duty cycle. Therefore, the bus clock frequency, which is one-half of the base clock frequency, is one-fourth the frequency of the selected clock (CGMXCLK or CGMPCLK).

The BCS bit in the PLL control register (PCTL) selects which clock drives CGMOUT. The VCO clock cannot be selected as the base clock source if the PLL is not turned on. The PLL cannot be turned off if the VCO clock is selected. The PLL cannot be turned on or off simultaneously with the selection or deselection of the VCO clock.

This circuit is also used to select either the crystal clock, CGMXCLK or the VCO clock, CGMVCLK, as the source of the USB clock, USBCLK.

8.3.9 CGM External Connections

In its typical configuration, the CGM requires seven external components. Five of these are for the crystal oscillator and two are for the PLL.

The crystal oscillator is normally connected in a Pierce oscillator configuration, as shown in Figure 8-2. Figure 8-2 shows only the logical representation of the internal components and may not represent actual circuitry. The oscillator configuration uses five components:

- Crystal, X_1
- Fixed capacitor, C_1
- Tuning capacitor, C_2 (can also be a fixed capacitor)
- Feedback resistor, R_B
- Series resistor, R_S (optional)

The series resistor (R_S) is included in the diagram to follow strict Pierce oscillator guidelines and may not be required for all ranges of operation, especially with high frequency crystals. Refer to the crystal manufacturer's data for more information.

Figure 8-2 also shows the external components for the PLL:

- Bypass capacitor, C_{BYP}
- Filter capacitor, C_F

Routing should be done with great care to minimize signal cross talk and noise.

See Chapter 17 Electrical Specifications for capacitor and resistor values.

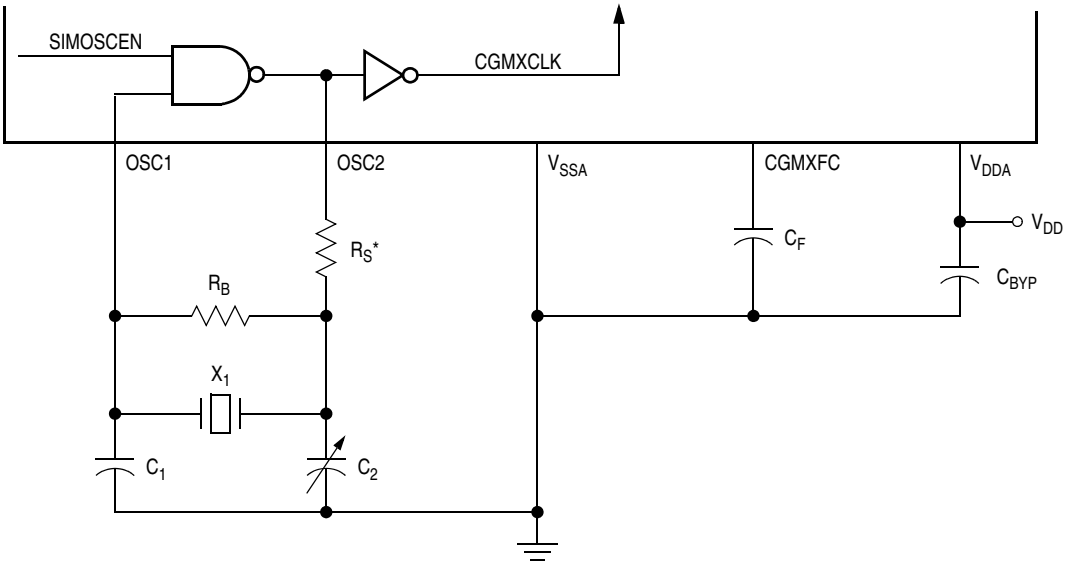

*R_S can be zero (shorted) when used with higher-frequency crystals. Refer to manufacturer's data.

Figure 8-2. CGM External Connections

8.4 I/O Signals

The following paragraphs describe the CGM I/O signals.

8.4.1 Crystal Amplifier Input Pin (OSC1)

The OSC1 pin is an input to the crystal oscillator amplifier.

8.4.2 Crystal Amplifier Output Pin (OSC2)

The OSC2 pin is the output of the crystal oscillator inverting amplifier.

8.4.3 External Filter Capacitor Pin (CGMXFC)

The CGMXFC pin is required by the loop filter to filter out phase corrections. A small external capacitor is connected to this pin.

NOTE

To prevent noise problems, C_F should be placed as close to the CGMXFC pin as possible, with minimum routing distances and no routing of other signals across the C_F connection.

8.4.4 PLL Analog Power Pin (V_{DDA})

V_{DDA} is a power pin used by the analog portions of the PLL. Connect the V_{DDA} pin to the same voltage potential as the V_{DD} pin.

NOTE

Route V_{DDA} carefully for maximum noise immunity and place bypass capacitors as close as possible to the package.

8.4.5 PLL Analog Ground Pin (V_{SSA})

V_{SSA} is a ground pin used by the analog portions of the PLL. Connect the V_{SSA} pin to the same voltage potential as the V_{SS} pin.

NOTE

Route V_{SSA} carefully for maximum noise immunity and place bypass capacitors as close as possible to the package.

8.4.6 Buffered Crystal Clock Output (CGMVOUT)

CGMVOUT buffers the OSC1 clock for external use.

8.4.7 CGMVSEL

CGMVSEL must be tied low or floated.

8.4.8 Oscillator Enable Signal (SIMOSCEN)

The SIMOSCEN signal comes from the system integration module (SIM) and enables the oscillator and PLL.

8.4.9 Crystal Output Frequency Signal (CGMXCLK)

CGMXCLK is the crystal oscillator output signal. It runs at the full speed of the crystal (f_{XCLK}) and comes directly from the crystal oscillator circuit. Figure 8-2 shows only the logical relation of CGMXCLK to OSC1 and OSC2 and may not represent the actual circuitry. The duty cycle of CGMXCLK is unknown and may depend on the crystal and other external factors. Also, the frequency and amplitude of CGMXCLK can be unstable at startup.

8.4.10 CGM Base Clock Output (CGMOUT)

CGMOUT is the clock output of the CGM. This signal goes to the SIM, which generates the MCU clocks. CGMOUT is a 50 percent duty cycle clock running at twice the bus frequency. CGMOUT is software programmable to be either the oscillator output, CGMXCLK, divided by two or the VCO clock, CGMVCLK, divided by two.

8.4.11 CGM CPU Interrupt (CGMINT)

CGMINT is the interrupt signal generated by the PLL lock detector.

8.5 CGM Registers

These registers control and monitor operation of the CGM:

- PLL control register (PCTL) (See 8.5.1 PLL Control Register (PCTL).)
- PLL bandwidth control register (PBWC) (See 8.5.2 PLL Bandwidth Control Register (PBWC).)
- PLL multiplier select registers (PMSH:PMSL) (See 8.5.3 PLL Multiplier Select Registers (PMSH:PMSL).)
- PLL reference divider select register (PRDS) (See 8.5.4 PLL Reference Divider Select Register (PRDS).)

Figure 8-3 is a summary of the CGM registers.

Addr.	Register Name		Bit 7	6	5	4	3	2	1	Bit 0
$003A	PLL Control Register (PCTL)	Read:	PLLIE	PLLF	PLLON	BCS	PRE1	PRE2	0	0
		Write:								
		Reset:	0	0	1	0	1	0	0	0
$003B	PLL Bandwidth Control Register (PBWC)	Read:	AUTO	LOCK	ACQ	0	0	0	0	0
		Write:								
		Reset:	0	0	0	0	0	0	0	0
$003C	PLL Multiplier Select Register High (PMSH)	Read:	0	0	0	0	MUL11	MUL10	MUL9	MUL8
		Write:								
		Reset:	0	0	0	0	0	0	0	0
$003D	PLL Multiplier Select Register Low (PMSL)	Read:	MUL7	MUL6	MUL5	MUL4	MUL3	MUL2	MUL1	MUL0
		Write:								
		Reset:	0	0	0	0	0	0	1	0
$003E	Unimplemented	Read:								
		Write:								
		Reset:								
$003F	PLL Reference Divider Select Register (PRDS)	Read:	0	0	0	0	RDS3	RDS2	RDS1	RDS0
		Write:								
		Reset:	0	0	0	0	0	0	0	1

= Unimplemented

NOTES:
1. When AUTO = 0, PLLIE is forced clear and is read-only.
2. When AUTO = 0, PLLF and LOCK read as clear.
3. When AUTO = 1, $\overline{ACQ}$ is read-only.
4. When PLLON = 0 or VRS7:VRS0 = $0, BCS is forced clear and is read-only.
5. When PLLON = 1, the PLL programming register is read-only.
6. When BCS = 1, PLLON is forced set and is read-only.

Figure 8-3. CGM I/O Register Summary

8.5.1 PLL Control Register (PCTL)

The PLL control register contains the interrupt enable and flag bits, the on/off switch, the base clock selector bit, the prescaler bits, and the VCO power of two range selector bits.

Address: $003A

	Bit 7	6	5	4	3	2	1	Bit 0
Read:	PLLIE	PLLF	PLLON	BCS	PRE1	PRE2	0	0
Write:								
Reset:	0	0	1	0	1	0	0	0

= Unimplemented

Figure 8-4. PLL Control Register (PCTL)

PLLIE — PLL Interrupt Enable Bit

This read/write bit enables the PLL to generate an interrupt request when the LOCK bit toggles, setting the PLL flag, PLLF. When the AUTO bit in the PLL bandwidth control register (PBWC) is clear, PLLIE cannot be written and reads as logic zero. Reset clears the PLLIE bit.

1 = PLL interrupts enabled
0 = PLL interrupts disabled

PLLF — PLL Interrupt Flag Bit

This read-only bit is set whenever the LOCK bit toggles. PLLF generates an interrupt request if the PLLIE bit also is set. PLLF always reads as logic zero when the AUTO bit in the PLL bandwidth control register (PBWC) is clear. Clear the PLLF bit by reading the PLL control register. Reset clears the PLLF bit.

1 = Change in lock condition
0 = No change in lock condition

NOTE

Do not inadvertently clear the PLLF bit. Any read or read-modify-write operation on the PLL control register clears the PLLF bit.

PLLON — PLL On Bit

This read/write bit activates the PLL and enables the VCO clock, CGMVCLK. PLLON cannot be cleared if the VCO clock is driving the base clock, CGMOUT (BCS = 1). (See 8.3.8 Base Clock Selector Circuit.) Reset sets this bit so that the loop can stabilize as the MCU is powering up.

1 = PLL on
0 = PLL off

BCS — Base Clock Select Bit

This read/write bit selects either the crystal oscillator clock (CGMXCLK) or the VCO clocks (CGMPCLK and CGMVCLK) to use as base clocks for the MCU.

BCS cannot be set while the PLLON bit is clear. After toggling BCS, it may take up to three CGMXCLK and three CGMPCLK cycles to complete the transition from one source clock to the other. During the transition, CGMOUT is held in stasis. (See 8.3.8 Base Clock Selector Circuit.) Reset clears the BCS bit.

1 = Selects the VCO clocks for the base clock.
CGMPCLK divided by two drives CGMOUT,
CGMVCLK (48MHz) drives USBCLK

0 = Selects the crystal oscillator clock for the base clock.
CGMXCLK divided by two drives CGMOUT,
CGMXCLK drives USBCLK

NOTE

PLLON and BCS have built-in protection that prevents the base clock selector circuit from selecting the VCO clock as the source of the base clock if the PLL is off. Therefore, PLLON cannot be cleared when BCS is set, and BCS cannot be set when PLLON is clear. If the PLL is off (PLLON = 0), selecting CGMPCLK/CGMVCLK requires two writes to the PLL control register. (See 8.3.8 Base Clock Selector Circuit.)

PRE1 and PRE0 — Prescaler program bits

These read/write bits control a prescaler that selects the prescaler power-of-two multiplier P. (See 8.3.3 PLL Circuits and 8.3.6 Programming the PLL.) PRE1:PRE0 cannot be written when the PLLON bit is set. Reset clears these bits.

Table 8-2. PRE[1:0] Programming

PRE1	PRE0	P	Prescaler Multiplier
0	0	0	1
0	1	1	2
1	0	2	4
1	1	3	8

8.5.2 PLL Bandwidth Control Register (PBWC)

The PLL bandwidth control register:

- Indicates when the PLL is locked
- In automatic bandwidth control mode, indicates when the PLL is in acquisition or tracking mode

Address: $003B

	Bit 7	6	5	4	3	2	1	Bit 0
Read:	AUTO	LOCK	ACQ	0	0	0	0	0
Write:								
Reset:	0	0	0	0	0	0	0	0

= Unimplemented

Figure 8-5. PLL Bandwidth Control Register (PBWC)

AUTO — Automatic Bandwidth Control Bit

This read/write bit selects automatic or manual bandwidth control. Since this CGM is optimized a frequency output of 48MHz for the USB module, automatic control should be set. Reset clears the AUTO bit.

1 = Automatic bandwidth control (recommended)
0 = Manual bandwidth control

LOCK — Lock Indicator Bit

When the AUTO bit is set, LOCK is a read-only bit that becomes set when the VCO clock, CGMVCLK, is locked (running at the programmed frequency). When the AUTO bit is clear, LOCK reads as logic zero and has no meaning. The write one function of this bit is reserved for test, so this bit must ***always*** be written a zero. Reset clears the LOCK bit.

1 = VCO frequency correct or locked
0 = VCO frequency incorrect or unlocked

$\overline{\text{ACQ}}$ — Acquisition Mode Bit

When the AUTO bit is set, $\overline{\text{ACQ}}$ is a read-only bit that indicates whether the PLL is in acquisition mode or tracking mode. When the AUTO bit is clear, $\overline{\text{ACQ}}$ is a read/write bit that controls whether the PLL is in acquisition or tracking mode.

In automatic bandwidth control mode (AUTO = 1), the last-written value from manual operation is stored in a temporary location and is recovered when manual operation resumes. Reset clears this bit, enabling acquisition mode.

1 = Tracking mode
0 = Acquisition mode

8.5.3 PLL Multiplier Select Registers (PMSH:PMSL)

The PLL multiplier select registers contain the programming information for the modulo feedback divider.

Address:	$003C	PMSH						
	Bit 7	6	5	4	3	2	1	Bit 0
Read:	0	0	0	0	MUL11	MUL10	MUL9	MUL8
Write:								
Reset:	0	0	0	0	0	0	0	0
Address:	$003D	PMSL						
Read: / Write:	MUL7	MUL6	MUL5	MUL4	MUL3	MUL2	MUL1	MUL0
Reset:	0	0	0	0	0	0	1	0

= Unimplemented

Figure 8-6. PLL Multiplier Select Registers (PMSH:PMSL)

MUL[11:0] — Multiplier select bits

These read/write bits control the modulo feedback divider that selects the VCO frequency multiplier N. (See 8.3.3 PLL Circuits and 8.3.6 Programming the PLL.) MUL[11:0] cannot be written when the PLLON bit in the PCTL is set. A value of $0000 in the multiplier select registers configures the modulo feedback divider the same as a value of $0001. Reset initializes the registers to $002 for a default multiply value of 2.

NOTE

The multiplier select bits have built-in protection such that they cannot be written when the PLL is on (PLLON = 1).

8.5.4 PLL Reference Divider Select Register (PRDS)

The PLL reference divider select register contains the programming information for the modulo reference divider.

Address:	$003F							
	Bit 7	6	5	4	3	2	1	Bit 0
Read:	0	0	0	0	RDS3	RDS2	RDS1	RDS0
Write:								
Reset:	0	0	0	0	0	0	0	1

= Unimplemented

Figure 8-7. PLL Reference Divider Select Register (PRDS)

RDS[3:0] — Reference Divider Select Bits

These read/write bits control the modulo reference divider that selects the reference division factor R. (See 8.3.3 PLL Circuits and 8.3.6 Programming the PLL.) RDS[7:0] cannot be written when the PLLON bit in the PCTL is set. A value of $00 in the reference divider select register configures the reference divider the same as a value of $01. (See 8.3.7 Special Programming Exceptions.) Reset initializes the register to $01 for a default divide value of 1.

NOTE

The reference divider select bits have built-in protection such that they cannot be written when the PLL is on (PLLON = 1).

8.6 Interrupts

When the AUTO bit is set in the PLL bandwidth control register (PBWC), the PLL can generate a CPU interrupt request every time the LOCK bit changes state. The PLLIE bit in the PLL control register (PCTL) enables CPU interrupts from the PLL. PLLF, the interrupt flag in the PCTL, becomes set whether interrupts are enabled or not. When the AUTO bit is clear, CPU interrupts from the PLL are disabled and PLLF reads as logic zero.

Software should read the LOCK bit after a PLL interrupt request to see if the request was due to an entry into lock or an exit from lock. When the PLL enters lock, the VCO clock, CGMPCLK, divided by two can be selected as the CGMOUT source by setting BCS in the PCTL. When the PLL exits lock, the VCO clock frequency is corrupt, and appropriate precautions should be taken. If the application is not frequency sensitive, interrupts should be disabled to prevent PLL interrupt service routines from impeding software performance or from exceeding stack limitations.

NOTE

Software can select the CGMPCLK divided by two as the CGMOUT source even if the PLL is not locked (LOCK = 0). Therefore, software should make sure the PLL is locked before setting the BCS bit.

8.7 Special Modes

The WAIT instruction puts the MCU in low-power-consumption standby modes.

8.7.1 Wait Mode

The WAIT instruction does not affect the CGM. Before entering wait mode, software can disengage and turn off the PLL by clearing the BCS and PLLON bits in the PLL control register (PCTL) to save power. Less power-sensitive applications can disengage the PLL without turning it off, so that the PLL clock is immediately available at WAIT exit. This would also be the case when the PLL is to wake the MCU from wait mode, such as when the PLL is first enabled and waiting for LOCK, or LOCK is lost.

8.7.2 CGM During Break Interrupts

The system integration module (SIM) controls whether status bits in other modules can be cleared during the break state. The BCFE bit in the SIM break flag control register (SBFCR) enables software to clear status bits during the break state. (See 7.7.3 Break Flag Control Register (BFCR).)

To allow software to clear status bits during a break interrupt, write a logic one to the BCFE bit. If a status bit is cleared during the break state, it remains cleared when the MCU exits the break state.

To protect the PLLF bit during the break state, write a logic zero to the BCFE bit. With BCFE at logic zero (its default state), software can read and write the PLL control register during the break state without affecting the PLLF bit.

8.8 Acquisition/Lock Time Specifications

The acquisition and lock times of the PLL are, in many applications, the most critical PLL design parameters. Proper design and use of the PLL ensures the highest stability and lowest acquisition/lock times.

8.8.1 Acquisition/Lock Time Definitions

Typical control systems refer to the acquisition time or lock time as the reaction time, within specified tolerances, of the system to a step input. In a PLL, the step input occurs when the PLL is turned on or when it suffers a noise hit. The tolerance is usually specified as a percent of the step input or when the output settles to the desired value plus or minus a percent of the frequency change. Therefore, the reaction time is constant in this definition, regardless of the size of the step input. For example, consider a system with a 5 percent acquisition time tolerance. If a command instructs the system to change from 0 Hz to 1 MHz, the acquisition time is the time taken for the frequency to reach 1 MHz ±50 kHz. Fifty kHz = 5% of the 1 MHz step input. If the system is operating at 1 MHz and suffers a –100 kHz noise hit, the acquisition time is the time taken to return from 900 kHz to 1 MHz ±5 kHz. Five kHz = 5 percent of the 100-kHz step input.

Other systems refer to acquisition and lock times as the time the system takes to reduce the error between the actual output and the desired output to within specified tolerances. Therefore, the acquisition or lock time varies according to the original error in the output. Minor errors may not even be registered. Typical PLL applications prefer to use this definition because the system requires the output frequency to be within a certain tolerance of the desired frequency regardless of the size of the initial error.

The discrepancy in these definitions makes it difficult to specify an acquisition or lock time for a typical PLL. Therefore, the definitions for acquisition and lock times for this module are:

- Acquisition time, t_{ACQ}, is the time the PLL takes to reduce the error between the actual output frequency and the desired output frequency to less than the tracking mode entry tolerance, Δ_{TRK}. Acquisition time is based on an initial frequency error, $(f_{DES} - f_{ORIG})/f_{DES}$, of not more than ±100 percent. In automatic bandwidth control mode (See 8.3.5 Manual and Automatic PLL Bandwidth Modes.), acquisition time expires when the $\overline{ACQ}$ bit becomes set in the PLL bandwidth control register (PBWC).
- Lock time, t_{LOCK}, is the time the PLL takes to reduce the error between the actual output frequency and the desired output frequency to less than the lock mode entry tolerance, Δ_{LOCK}. Lock time is based on an initial frequency error, $(f_{DES} - f_{ORIG})/f_{DES}$, of not more than ±100 percent. In automatic bandwidth control mode, lock time expires when the LOCK bit becomes set in the PLL bandwidth control register (PBWC). (See 8.3.5 Manual and Automatic PLL Bandwidth Modes.)

Obviously, the acquisition and lock times can vary according to how large the frequency error is and may be shorter or longer in many cases.

8.8.2 Parametric Influences on Reaction Time

Acquisition and lock times are designed to be as short as possible while still providing the highest possible stability. These reaction times are not constant, however. Many factors directly and indirectly affect the acquisition time.

The most critical parameter which affects the reaction times of the PLL is the reference frequency, f_{RDV}. This frequency is the input to the phase detector and controls how often the PLL makes corrections. For stability, the corrections must be small compared to the desired frequency, so several corrections are required to reduce the frequency error. Therefore, the slower the reference the longer it takes to make these corrections. This parameter is under user control via the choice of crystal frequency f_{XCLK} and the R value programmed in the reference divider. (See 8.3.3 PLL Circuits, 8.3.6 Programming the PLL, and 8.5.4 PLL Reference Divider Select Register (PRDS).)

Another critical parameter is the external filter capacitor. The PLL modifies the voltage on the VCO by adding or subtracting charge from this capacitor. Therefore, the rate at which the voltage changes for a given frequency error (thus change in charge) is proportional to the capacitor size. The size of the capacitor also is related to the stability of the PLL. If the capacitor is too small, the PLL cannot make small enough adjustments to the voltage and the system cannot lock. If the capacitor is too large, the PLL may not be able to adjust the voltage in a reasonable time. (See 8.8.3 Choosing a Filter Capacitor.)

Also important is the operating voltage potential applied to V_{DDA}. The power supply potential alters the characteristics of the PLL. A fixed value is best. Variable supplies, such as batteries, are acceptable if they vary within a known range at very slow speeds. Noise on the power supply is not acceptable, because it causes small frequency errors which continually change the acquisition time of the PLL.

Temperature and processing also can affect acquisition time because the electrical characteristics of the PLL change. The part operates as specified as long as these influences stay within the specified limits. External factors, however, can cause drastic changes in the operation of the PLL. These factors include noise injected into the PLL through the filter capacitor, filter capacitor leakage, stray impedances on the circuit board, and even humidity or circuit board contamination.

8.8.3 Choosing a Filter Capacitor

As described in 8.8.2 Parametric Influences on Reaction Time, the external filter capacitor, C_F, is critical to the stability and reaction time of the PLL. The PLL is also dependent on reference frequency and supply voltage. The value of the capacitor must, therefore, be chosen with supply potential and reference frequency in mind. For proper operation, the external filter capacitor must be chosen according to this equation:

$$C_F = C_{FACT}\left(\frac{V_{DDA}}{f_{RDV}}\right)$$

For the value of V_{DDA}, choose the voltage potential at which the MCU is operating. If the power supply is variable, choose a value near the middle of the range of possible supply values.

This equation does not always yield a commonly available capacitor size, so round to the nearest available size. If the value is between two different sizes, choose the higher value for better stability. Choosing the lower size may seem attractive for acquisition time improvement, but the PLL may become unstable. Also, always choose a capacitor with a tight tolerance (±20 percent or better) and low dissipation.

8.8.4 Reaction Time Calculation

The actual acquisition and lock times can be calculated using the equations below. These equations yield nominal values under the following conditions:

- Correct selection of filter capacitor, C_F (See 8.8.3 Choosing a Filter Capacitor.)
- Room temperature operation
- Negligible external leakage on CGMXFC
- Negligible noise

The K factor in the equations is derived from internal PLL parameters. K_{ACQ} is the K factor when the PLL is configured in acquisition mode, and K_{TRK} is the K factor when the PLL is configured in tracking mode. (See 8.3.4 Acquisition and Tracking Modes.) Reaction time is based on an initial frequency error, $(f_{DES} - f_{ORIG})/f_{DES}$, of not more than ±100 percent.

$$t_{ACQ} = \left(\frac{V_{DDA}}{f_{RDV}}\right)\left(\frac{8}{K_{ACQ}}\right)$$

$$t_{AL} = \left(\frac{V_{DDA}}{f_{RDV}}\right)\left(\frac{4}{K_{TRK}}\right)$$

$$t_{LOCKMAX} = t_{ACQ} + t_{AL} + 256t_{VRDV}$$

NOTE

The inverse proportionality between the lock time and the reference frequency.

In automatic bandwidth control mode, the acquisition and lock times are quantized into units based on the reference frequency. (See 8.3.5 Manual and Automatic PLL Bandwidth Modes.) A certain number of clock cycles, n_{ACQ}, is required to ascertain that the PLL is within the tracking mode entry tolerance, Δ_{TRK}, before exiting acquisition mode. A certain number of clock cycles, n_{TRK}, is required to ascertain that the PLL is within the lock mode entry tolerance, Δ_{LOCK}. Therefore, the acquisition time, t_{ACQ}, is an integer multiple of n_{ACQ}/f_{RDV}, and the acquisition to lock time, t_{AL}, is an integer multiple of n_{TRK}/f_{RDV}.

In manual mode, it is usually necessary to wait considerably longer than $t_{LOCKMAX}$ before selecting the PLL clock (See 8.3.8 Base Clock Selector Circuit.), because the factors described in 8.8.2 Parametric Influences on Reaction Time may slow the lock time considerably. Automatic bandwidth mode is recommended for most users.

Chapter 9
Universal Serial Bus Module (USB)

9.1 Introduction

This chapter describes the universal serial bus module (USB).

9.2 Features

Features of the general USB Module include the following:

- Integrated 3.3 Volt Regulator with 3.3V Output Pin REGOUT
- Integrated USB transceiver supporting both full speed and low speed functions
- USB Data Control Logic
  - Packet decoding/generation
  - CRC generation and checking
  - NRZI encoding/decoding
  - Bit stuffing/de-stuffing
- USB reset support
- Suspend and resume operations
  - Remote Wakeup support
- STALL, NAK, and ACK handshake generation

Features of the HUB function include the following:

- HUB Control Endpoint 0
  - 8-byte transmit buffer
  - 8-byte receive buffer
- HUB Interrupt Endpoint 1
  - 1-byte transmit buffer
- USB interrupts
  - transaction interrupt driven
  - Start of Frame interrupt
  - EOF2 interrupt
  - End of Packet interrupt
  - Signal transition interrupt
  - Frame timer locked interrupt
- HUB repeater and controller function
  - downstream and upstream connectivity
  - bus state evaluation
  - selective reset, suspend and resume
  - fault condition hardware detection

Features of the embedded device function include the following:

- Device Control Endpoint 0 and Interrupt Endpoints 1 and 2
  - 8-byte transmit buffer
  - 8-byte receive buffer
- Device Interrupt Endpoints 1 and 2
  - 8-byte transmit buffer
- USB generated interrupts
  - transaction interrupt driven

9.3 Overview

This section provides an overview of the Universal Serial Bus (USB) module developed for the MC68HC08KH12A. This USB module is designed to serve as a compound device, and operates from a reference frequency of 48MHz, derived from the CGM (see Chapter 8 Clock Generator Module (CGM)). An embedded full speed device function is combined with a hub in a single USB module. For the hub sub-module, five basic properties can be supported by the hardware or the software: connectivity behavior, power management, device connect/disconnect detection, bus fault detection and recovery, and full/low speed device traffic control. Endpoint 0 of the hub sub-module functions as a receive/transmit control endpoint. Endpoint 1 of the hub sub-module functions as interrupt transfer to report the device change state. For the embedded device sub-module, three types of USB data transfers are supported: control, interrupt, and bulk (transmit only). Endpoint 0 of the embedded device sub-module functions as a receive/transmit control endpoint. Endpoints 1 and 2 of the embedded device sub-module can function as interrupt or bulk, but only in the transmit direction.

A block diagram of the USB module is shown Figure 9-1. The USB module manages communications between the host and the USB function. The module is partitioned into eight functional blocks. These blocks consist of a 3.3 volt regulator, a dual function transceiver, the hub repeater function, the SIE (Serial Interface Engine), the frame counter logic, the hub control logic, the embedded device control logic, and the endpoint registers.

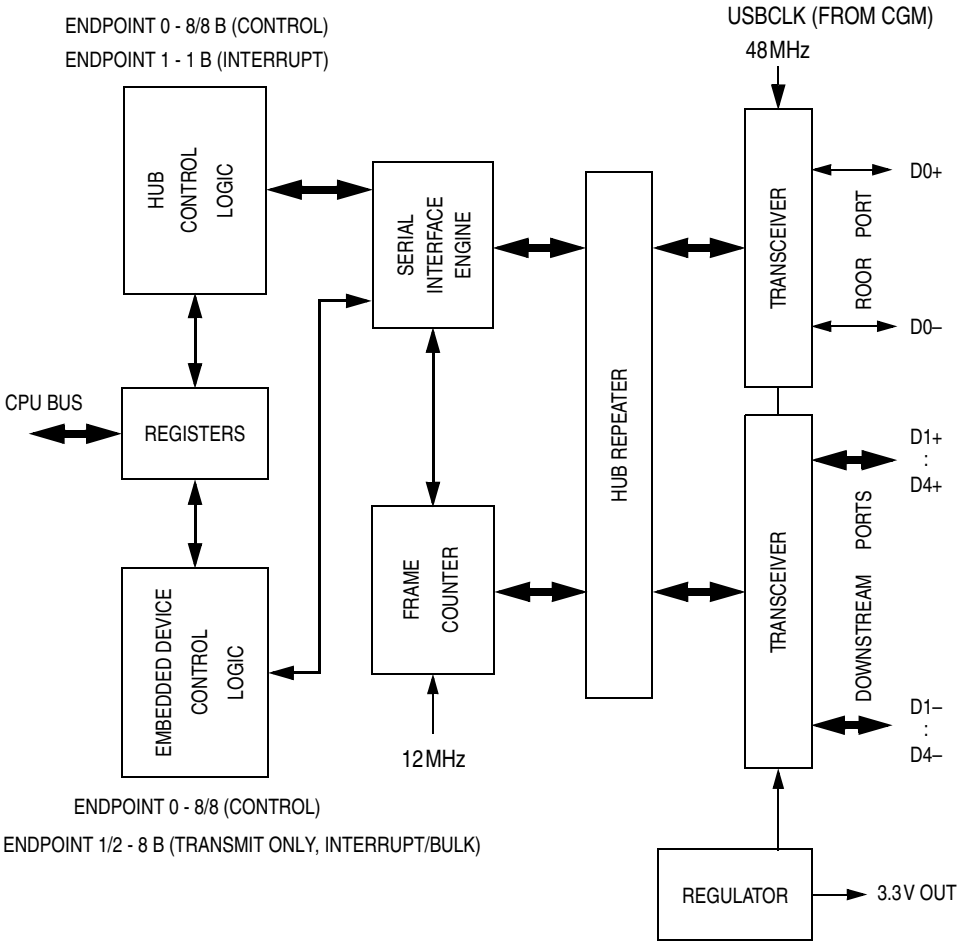

Figure 9-1. USB Block Diagram

9.4 I/O Register Description of the HUB function

The USB hub function provides a set of control/status registers and sixteen data registers that provide storage for the buffering of data between the USB hub function and the CPU. These registers are shown in Figure 9-2 and Figure 9-3.

Addr.	Register Name		Bit 7	6	5	4	3	2	1	Bit 0
$0051	USB HUB Downstream Port 1 Control Register (HDP1CR)	Read:	PEN1	LOWSP1	RST1	RESUM1	SUSP1	0	D1+	D1–
		Write:								
		Reset:	0	0	0	0	0	0	X	X
$0052	USB HUB Downstream Port 2 Control Register (HDP2CR)	Read:	PEN2	LOWSP2	RST2	RESUM2	SUSP2	0	D2+	D2–
		Write:								
		Reset:	0	0	0	0	0	0	X	X

= Unimplemented X = Indeterminate

0** = Reset by POR only

Figure 9-2. HUB Control Register Summary

Addr.	Register Name		Bit 7	6	5	4	3	2	1	Bit 0
$0053	USB HUB Downstream Port 3 Control Register (HDP3CR)	Read:	PEN3	LOWSP3	RST3	RESUM3	SUSP3	0	D3+	D3–
		Write:								
		Reset:	0	0	0	0	0	0	X	X
$0054	USB HUB Downstream Port 4 Control Register (HDP4CR)	Read:	PEN4	LOWSP4	RST4	RESUM4	SUSP4	0	D4+	D4–
		Write:								
		Reset:	0	0	0	0	0	0	X	X
$0055	Unimplemented	Read:								
		Write:								
		Reset:								
$0056	USB SIE Timing Interrupt Register (SIETIR)	Read:	SOFF	EOF2F	EOPF	TRANF	SOFIE	EOF2IE	EOPIE	TRANIE
		Write:								
		Reset:	0	0	0	0	0	0	0	0
$0057	USB SIE Timing Status Register (SIETSR)	Read:	RSTF	0	LOCKF	0	0	0	0	0
		Write:		RSTFR		LOCKFR	SOFFR	EOF2FR	EOPFR	TRANFR
		Reset:	0**	0	0	0	0	0	0	0
$0058	USB HUB Address Register (HADDR)	Read:	USBEN	ADD6	ADD5	ADD4	ADD3	ADD2	ADD1	ADD0
		Write:								
		Reset:	0**	0	0	0	0	0	0	0
$0059	USB HUB Interrupt Register 0 (HIR0)	Read:	TXDF	RXDF	0	0	TXDIE	RXDIE	0	0
		Write:							TXDFR	RXDFR
		Reset:	0	0	0	0	0	0	0	0
$005A	Unimplemented	Read:								
		Write:								
		Reset:								
$005B	USB HUB Control Register 0 (HCR0)	Read:	TSEQ	STALL0	TXE	RXE	TPSIZ3	TPSIZ2	TPSIZ1	TPSIZ0
		Write:								
		Reset:	0	0	0	0	0	0	0	0
$005C	USB HUB Endpoint 1 Control and Data Register (HCDR)	Read:	STALL1	PNEW	PCHG5	PCHG4	PCHG3	PCHG2	PCHG1	PCHG0
		Write:								
		Reset:	0	0	0	0	0	0	0	0
$005D	USB HUB Status Register (HSR)	Read:	RSEQ	SETUP	TX1ST	0	RPSIZ3	RPSIZ2	RPSIZ1	RPSIZ0
		Write:				TX1STR				
		Reset:	X	X	0	0	X	X	X	X
$005E	USB HUB Root Port Control Register (HRPCR)	Read:	0	0	0	RESUM0	SUSPND	0	D0+	D0–
		Write:								
		Reset:	0	0	0	0	0	0	X	X

= Unimplemented X = Indeterminate

0** = Reset by POR only

Figure 9-2. HUB Control Register Summary (Continued)

Addr.	Register Name		Bit 7	6	5	4	3	2	1	Bit 0
$0030	USB HUB Endpoint 0 Data Register 0 (HE0D0)	Read:	HE0R07	HE0R06	HE0R05	HE0R04	HE0R03	HE0R02	HE0R01	HE0R00
		Write:	HE0T07	HE0T06	HE0T05	HE0T04	HE0T03	HE0T02	HE0T01	HE0T00
		Reset:	X	X	X	X	X	X	X	X
$0031	USB HUB Endpoint 0 Data Register 1 (HE0D1)	Read:	HE0R17	HE0R16	HE0R15	HE0R14	HE0R13	HE0R12	HE0R11	HE0R10
		Write:	HE0T17	HE0T16	HE0T15	HE0T14	HE0T13	HE0T12	HE0T11	HE0T10
		Reset:	X	X	X	X	X	X	X	X
$0032	USB HUB Endpoint 0 Data Register 2 (HE0D2)	Read:	HE0R27	HE0R26	HE0R25	HE0R24	HE0R23	HE0R22	HE0R21	HE0R20
		Write:	HE0T27	HE0T26	HE0T25	HE0T24	HE0T23	HE0T22	HE0T21	HE0T20
		Reset:	X	X	X	X	X	X	X	X
$0033	USB HUB Endpoint 0 Data Register 3 (HE0D3)	Read:	HE0R37	HE0R36	HE0R35	HE0R34	HE0R33	HE0R32	HE0R31	HE0R30
		Write:	HE0T37	HE0T36	HE0T35	HE0T34	HE0T33	HE0T32	HE0T31	HE0T30
		Reset:	X	X	X	X	X	X	X	X
$0034	USB HUB Endpoint 0 Data Register 4 (HE0D4)	Read:	HE0R47	HE0R46	HE0R45	HE0R44	HE0R43	HE0R42	HE0R41	HE0R40
		Write:	HE0T47	HE0T46	HE0T45	HE0T44	HE0T43	HE0T42	HE0T41	HE0T40
		Reset:	X	X	X	X	X	X	X	X
$0035	USB HUB Endpoint 0 Data Register 5 (HE0D5)	Read:	HE0R57	HE0R56	HE0R55	HE0R54	HE0R53	HE0R52	HE0R51	HE0R50
		Write:	HE0T57	HE0T56	HE0T55	HE0T54	HE0T53	HE0T52	HE0T51	HE0T50
		Reset:	X	X	X	X	X	X	X	X
$0036	USB HUB Endpoint 0 Data Register 6 (HE0D6)	Read:	HE0R67	HE0R66	HE0R65	HE0R64	HE0R63	HE0R62	HE0R61	HE0R60
		Write:	HE0T67	HE0T66	HE0T65	HE0T64	HE0T63	HE0T62	HE0T61	HE0T60
		Reset:	X	X	X	X	X	X	X	X
$0037	USB HUB Endpoint 0 Data Register 7 (HE0D7)	Read:	HE0R77	HE0R76	HE0R75	HE0R74	HE0R73	HE0R72	HE0R71	HE0R70
		Write:	HE0T77	HE0T76	HE0T75	HE0T74	HE0T73	HE0T72	HE0T71	HE0T70
		Reset:	X	X	X	X	X	X	X	X

Figure 9-3. HUB Data Register Summary

9.4.1 USB HUB Root Port Control Register (HRPCR)

Address: $005E

	Bit 7	6	5	4	3	2	1	Bit 0
Read:	0	0	0	RESUM0	SUSPND	0	D0+	D0–
Write:								
Reset:	0	0	0	0	0	0	X	X

= Unimplemented X = Indeterminate

Figure 9-4. USB HUB Root Port Control Register (HRPCR)

RESUM0 — Force Resume to the Root Port

This read/write bit forces a resume signal (“K” state) onto the USB root port data lines to initiate a remote wakeup. Software should control the timing of the forced resume to be between 10 ms and 15 ms. Reset clears this bit.

1 = Force root port data lines to “K” state
0 = Default

SUSPND — USB Suspend Control Bit

To save power, this read/write bit should be set by the software if at least 3ms constant idle state is detected on USB bus. Setting this bit puts the transceiver and regulator into a power savings mode. This bit also determines the latch scheme for the data lines of the root port and the downstream port. When this bit is 1, the current state shown on the data lines will be reflected to the data register (D+/D–) directly. When the bit is 0, the data registers are the latched state sampled at the last EOF2 sample point. The hub repeater's function is affected by this bit too. The upstream and downstream traffic will be blocked if this bit is set to 1. When the global resume or the downstream remote wakeup signal is found by the suspend hub, software is responsible to propagate the traffic between the root port and the enabled downstream port by setting the RESUMx control bit. Reset clears this bit.

EOF2 is generated by KH12 every millisecond, if SOF is not detected when three or more EOF2 has occurred, software can set the SUSPND-bit and put KH12 into suspend mode.

D0+/D0– — Root Port Differential Data

These read only bits are the differential data shown on the HUB root ports. When the bit SUSPND is 0, the data is the latched state at the last EOF2 sample point. When the bit SUSPND is 1, the data reflects the current state on the data line while accessing this register.

9.4.2 USB HUB Downstream Port Control Register (HDP1CR-HDP4CR)

Address: $0051	Bit 7	6	5	4	3	2	1	Bit 0
Read:	PEN1	LOWSP1	RST1	RESUM1	SUSP1	0	D1+	D1–
Write:								
Reset:	0	0	0	0	0	0	X	X

↓ ↓

Address: $0054								
Read:	PEN4	LOWSP4	RST4	RESUM4	SUSP4	0	D4+	D4–
Write:								
Reset:	0	0	0	0	0	0	X	X

= Unimplemented X = Indeterminate

Figure 9-5. USB HUB Downstream Port Control Registers (HDP1CR-HDP4CR)

PEN1-PEN4 — Downstream Port Enable Control Bit

This read/write bit determines whether the enabled or disabled state should be assigned to the downstream port. Setting this bit 1 to enable the port and clear the bit to disable the port. In the enabled state a full-speed port propagates all downstream signaling, a low-speed port propagates downstream low-speed packet traffic when preceded by the preamble PID. An enabled port propagates all upstream signaling including full speed and low speed packets. This bit can be set to 1 by the host request only. It can be cleared either by hardware when a fault condition was detected or by software through the host request. Reset clears this bit.

1 = Downstream port is enabled
0 = Downstream port is disabled

LOWSP1-LOWSP4 — Full Speed / Low Speed Port Control Bit

This read/write bit specifies the attached device in the downstream port is low speed device or full speed device. Software is responsible to detect the device attachment and whether a device is full or low speed. Reset clears this bit.

1 = Downstream port is low speed
0 = Downstream port is full speed

NOTE

after a port is enabled, HUB will automatically generate a low speed keep awake signal to the port every millisecond.

RST1-RST4 — Force Reset to the Downstream Port

This read/write bit forces a reset signal (SE0 state) onto the USB downstream port data lines. This bit can be set by the host request SetPortFeature (PORT_RESET) only. Software should control the timing of the forced reset signaling downstream for at least 10 ms. Reset clears this bit.

1 = Force downstream port data lines to SE0 state
0 = Default

RESUM1-RESUM4 — Force Resume to the Downstream Port

This read/write bit forces a resume signal (“K” state) onto the USB downstream port data lines. This bit is set to reflect the resume signal when the software detects the remote resume signal on the data lines of the selective suspend downstream port. Downstream selective resume sequence to a port may also be initiated via the host request ClearPortFeature (PORT_SUSPEND). Software should control the timing of the forced resume signaling downstream for at least 20 ms. To indicate the end of the resume, a low speed EOP signal will be followed when this control bit changes from 1 to 0. Reset clears this bit.

1 = Force downstream port data lines to “K” state
0 = Default

SUSP1-SUSP4 — Downstream Port Selective Suspend Bit

This read/write bit forces the downstream port entering the selective suspend mode. This bit can be set by the host request SetPortFeature (PORT_SUSPEND) only. When this bit is set, the hub prevents propagating any bus activity (except the port reset or port resume request or the global reset signal) downstream, and the port can only reflect upstream bus state changes via the endpoint 1 of the hub. The blocking occurs at the next EOF2 point when this bit is set. Reset clears this bit.

1 = Force downstream port enters the selective suspend mode
0 = Default

D1+/D1– to D4+/D4– — Downstream Port Differential Data

These read only bits are the differential data shown on the HUB downstream ports. When the bit SUSPND in the register HRPCR is 0, the data is the latched state at the last EOF2 sample point. When the bit SUSPND is 1, the data reflects the current state on the data line while accessing this register.

9.4.3 USB SIE Timing Interrupt Register (SIETIR)

Address: $0056

	Bit 7	6	5	4	3	2	1	Bit 0
Read:	SOFF	EOF2F	EOPF	TRANF	SOFIE	EOF2IE	EOPIE	TRANIE
Write:								
Reset:	0	0	0	0	0	0	0	0

= Unimplemented

Figure 9-6. USB SIE Timing Interrupt Register (SIETIR)

SOFF — Start Of Frame Detect Flag

This read only bit is set when a valid SOF PID is detected on the D0+ and D0– lines at the root port. Software must clear this flag by writing a logic 1 to SOFFR bit in the SIETSR register. Reset clears this bit. Writing to SOFF has no effect.

1 = Start Of Frame PID has been detected
0 = Start Of Frame PID has not been detected

EOF2F — The second End Of Frame Point Flag

This read only bit is set when the internal frame timer counts to the bit time that the hub must see upstream traffic terminated near the end of frame. This bit time is defined as 10 bit times from the next Start of Frame PID. Software must clear this flag by writing a logic 1 to EOF2FR bit in the SIETSR register. Reset clears this bit. Writing to EOF2F has no effect.

1 = Frame timer counts to the EOF2 point
0 = Frame timer does not count to the EOF2 point

EOPF — End of Packet Detect Flag

This read only bit is set when a valid End-of-Packet sequence is detected on the D0+ and D0– lines. Software must clear this flag by writing a logic 1 to the EOPFR bit in the SIETSR register. Reset clears this bit. Writing to EOPF has no effect.

1 = End-of-Packet sequence has been detected
0 = End-of-Packet sequence has not been detected

TRANF — Bus Signal Transition Detect Flag

This read only bit is set if there is any bus activity on the upstream or the downstream data lines. Generally speaking, this bit is used to wakeup the suspended hub when there is any bus activity occurred. Software must clear this flag by writing a logic 1 to the TRANFR bit in the SIETSR register. Reset clears this bit. Writing to TRANF has no effect.

1 = Signal transition has been detected
0 = Signal transition has not been detected

SOFIE — Start Of Frame Interrupt Enable

This read/write bit enables the Start Of Frame to generate a USB interrupt when the SOFF bit becomes set. Reset clears this bit.

1 = USB interrupt enabled for Start Of Frame
0 = USB interrupt disabled for Start Of Frame

EOF2IE — The Second End of Frame Point Interrupt Enable

This read/write bit enables the Second End Of Frame to generate a USB interrupt when the EOF2F bit becomes set. Reset clears this bit.

1 = USB interrupt enabled for the Second End Of Frame Point
0 = USB interrupt disabled for the Second End Of Frame Point

EOPIE — End of Packet Detect Interrupt Enable

This read/write bit enables the USB to generate a interrupt request when the EOPF bit becomes set. Reset clears the bit.

1 = USB interrupt enabled for End-of-Packet sequence detection
0 = USB interrupt disabled for End-of-Packet sequence detection

TRANIE — Bus Signal Transition Detect Interrupt Enable

This read/write bit enables the Signal Transition to generate a USB interrupt when the TRANF bit becomes set. Reset clears this bit.

1 = USB interrupt enabled for Bus Signal Transition
0 = USB interrupt disabled for Bus Signal Transition

9.4.4 USB SIE Timing Status Register (SIETSR)

Address: $0057

	Bit 7	6	5	4	3	2	1	Bit 0
Read:	RSTF	0	LOCKF	0	0	0	0	0
Write:		RSTFR		LOCKFR	SOFFR	EOF2FR	EOPFR	TRANFR
Reset:	0**	0	0	0	0	0	0	0

= Unimplemented 0** = Reset by POR only

Figure 9-7. USB SIE Timing Status Register (SIETSR)

RSTF — USB Reset Flag

This read only bit is set when a valid reset signal state is detected on the D0+ and D0- lines. This reset detection will also generate an internal reset signal to reset the CPU and other peripherals including the USB module. This bit is cleared by writing a logic 1 to the RSTFR bit.

NOTE

*** Please note RSTF bit is only be reset by a POR reset.*

RSTFR — Clear Reset Indicator Bit

Writing a logic 1 to this write only bit will clear the RSTF bit if it is set. Writing a logic 0 to the RSTFR has no effect. Reset clears this bit.

LOCKF — USB Frame Timer Locked

This read only bit is set when the internal frame timer is locked to the host timer. This bit is cleared by writing a logic 1 to the LOCKFR bit. Reset clears this bit.

LOCKFR — Clear Frame Timer Locked Flag

Writing a logic 1 to this write only bit will clear the LOCKF bit if it is set. Writing a logic 0 to the LOCKFR has no effect. Reset clears this bit.

SOFFR — Start Of Frame Flag Reset

Writing a logic 1 to this write only bit will clear the SOFF bit if it is set. Writing a logic 0 to the SOFFR has no effect. Reset clears this bit.

EOF2FR — The Second End of Frame Point Flag Reset

Writing a logic 1 to this write only bit will clear the EOF2F bit if it is set. Writing a logic 0 to the EOF2FR has no effect. Reset clears this bit.

EOPFR — End of Packet Flag Reset

Writing a logic 1 to this write only bit will clear the EOPF bit if it is set. Writing a logic 0 to the EOPFR has no effect. Reset clears this bit.

TRANFR — Bus Signal Transition Flag Reset

Writing a logic 1 to this write only bit will clear the TRANF bit if it is set. Writing a logic 0 to the TRANFR has no effect. Reset clears this bit.

9.4.5 USB HUB Address Register (HADDR)

Address: $0058

	Bit 7	6	5	4	3	2	1	Bit 0
Read: Write:	USBEN	ADD6	ADD5	ADD4	ADD3	ADD2	ADD1	ADD0
Reset:	0**	0	0	0	0	0	0	0

0** = Reset by POR only

Figure 9-8. USB HUB Address Register (HADDR)

USBEN — USB Module Enable

This read/write bit enables and disables the USB module. When USBEN is cleared, the USB module will not respond to any tokens and the external regulated output REGOUT will be turned off.

NOTE

***USBEN bit can only be cleared by a POR reset.*

1 = USB function enabled
0 = USB function disabled, USB transceiver is also disabled to save power.

ADD6-ADD0 — USB HUB Function Address

These bits specify the address of the HUB function. Reset clears these bits.

9.4.6 USB HUB Interrupt Register 0 (HIR0)

Address: $0059

	Bit 7	6	5	4	3	2	1	Bit 0
Read:	TXDF	RXDF	0	0	TXDIE	RXDIE	0	0
Write:							TXDFR	RXDFR
Reset:	0	0	0	0	0	0	0	0

= Unimplemented

Figure 9-9. USB HUB Interrupt Register 0 (HIR0)

TXDF — HUB Endpoint 0 Data Transmit Flag

This read only bit is set after the data stored in HUB Endpoint 0 transmit buffers has been sent and an ACK handshake packet from the host is received. Once the next set of data is ready in the transmit buffers, software must clear this flag by writing a logic 1 to the TXDFR bit. To enable the next data packet transmission, TXE must also be set. If TXDF bit is not cleared, a NAK handshake will be returned in the next IN transaction.

Reset clears this bit. Writing to TXDF has no effect.
1 = Transmit on HUB Endpoint 0 has occurred
0 = Transmit on HUB Endpoint 0 has not occurred

RXDF — HUB Endpoint 0 Data Receive Flag

This read only bit is set after the USB HUB function has received a data packet and responded with an ACK handshake packet. Software must clear this flag by writing a logic 1 to the RXDFR bit after all of the received data has been read. Software must also set RXE bit to one to enable the next data packet reception. If RXDF bit is not cleared, a NAK handshake will be returned in the next OUT transaction.
Reset clears this bit. Writing to RXDF has no effect.
1 = Receive on HUB Endpoint 0 has occurred
0 = Receive on HUB Endpoint 0 has not occurred

TXDIE — HUB Endpoint 0 Transmit Interrupt Enable

This read/write bit enables the Transmit HUB Endpoint 0 to generate CPU interrupt requests when the TXDF bit becomes set. Reset clears the TXDIE bit.
1 = USB interrupt enabled for Transmit HUB Endpoint 0
0 = USB interrupt disabled for Transmit HUB Endpoint 0

RXDIE — HUB Endpoint 0 Receive Interrupt Enable

This read/write bit enables the Receive HUB Endpoint 0 to generate CPU interrupt requests when the RXDF bit becomes set. Reset clears the RXDIE bit.
1 = USB interrupt enabled for Receive HUB Endpoint 0
0 = USB interrupt disabled for Receive HUB Endpoint 0

TXDFR — HUB Endpoint 0 Transmit Flag Reset

Writing a logic 1 to this write only bit will clear the TXDF bit if it is set. Writing a logic 0 to TXDFR has no effect. Reset clears this bit.

RXDFR — HUB Endpoint 0 Receive Flag Reset

Writing a logic 1 to this write only bit will clear the RXDF bit if it is set. Writing a logic 0 to RXDFR has no effect. Reset clears this bit.

9.4.7 USB HUB Control Register 0 (HCR0)

Address: $005B

	Bit 7	6	5	4	3	2	1	Bit 0
Read: Write:	TSEQ	STALL0	TXE	RXE	TPSIZ3	TPSIZ2	TPSIZ1	TPSIZ0
Reset:	0	0	0	0	0	0	0	0

Figure 9-10. USB HUB Control Register 0 (HCR0)

TSEQ — HUB Endpoint 0 Transmit Sequence Bit

This read/write bit determines which type of data packet (DATA0 or DATA1) will be sent during the next IN transaction directed at Endpoint 0. Toggling of this bit must be controlled by software. Reset clears this bit.
1 = DATA1 Token active for next HUB Endpoint 0 transmit
0 = DATA0 Token active for next HUB Endpoint 0 transmit

STALL0 — HUB Endpoint 0 Force Stall Bit

This read/write bit causes HUB Endpoint 0 to return a STALL handshake when polled by either an IN or OUT token by the host. The USB hardware clears this bit when a SETUP token is received. Reset clears this bit.

1 = Send STALL handshake
0 = Default

TXE — HUB Endpoint 0 Transmit Enable

This read/write bit enables a transmit to occur when the USB Host controller sends an IN token to the HUB Endpoint 0. Software should set this bit when data is ready to be transmitted. It must be cleared by software when no more HUB Endpoint 0 data packets needs to be transmitted. If this bit is 0 or the TXDF is set, the USB will respond with a NAK handshake to any HUB Endpoint 0 IN tokens. Reset clears this bit.

1 = Data is ready to be sent
0 = Data is not ready. Respond with NAK

RXE — HUB Endpoint 0 Receive Enable

This read/write bit enables a receive to occur when the USB Host controller sends an OUT token to the HUB Endpoint 0. Software should set this bit when data is ready to be received. It must be cleared by software when data cannot be received. If this bit is 0 or the RXDF is set, the USB will respond with a NAK handshake to any HUB Endpoint 0 OUT tokens. Reset clears this bit.

1 = Data is ready to be received
0 = Not ready for data. Respond with NAK

TPSIZ3-TPSIZ0 — HUB Endpoint 0 Transmit Data Packet Size

These read/write bits store the number of transmit data bytes for the next IN token request for HUB Endpoint 0. These bits are cleared by reset.

9.4.8 USB HUB Endpoint1 Control & Data Register (HCDR)

Address: $005C

	Bit 7	6	5	4	3	2	1	Bit 0
Read: Write:	STALL1	PNEW	PCHG5	PCHG4	PCHG3	PCHG2	PCHG1	PCHG0
Reset:	0	0	0	0	0	0	0	0

Figure 9-11. USB HUB Control Register 1 (HCR1)

STALL1 — HUB Endpoint 1 Force Stall Bit

This read/write bit causes HUB Endpoint 1 to return a STALL handshake when polled by the host. Reset clears this bit.

1 = Send STALL handshake
0 = Default

PNEW — Port New Status Change

This read/write bit enables a transmit to occur when the USB Host controller sends an IN token to HUB Endpoint 1. Software should set this bit when there is any status change on the downstream ports, embedded device or hub. It must be cleared by software when there is no status change needs to be reported to the host through the Endpoint1. If this bit is 0, a NAK handshake will be returned for next IN token for HUB Endpoint 1. Reset clears this bit.

1 = Port status change bit is ready to be sent.
0 = Port status does not change. Respond with NAK.

PCHG5-PCHG0 — HUB and Port Status Change Bits

These read/write bits report the status change for the Hub, embedded device and the four downstream ports. The Status Change Bitmap is returned to the host through the HUB endpoint 1 if the bit PNEW is 1. These bits are cleared by reset.

Bit Name	Function	Value	Description
PCHG0	HUB status change	0	No status change in HUB
		1	HUB status change detected
PCHG1	Port 1 status change	0	No status change in Port 1
		1	Port 1 status change detected
PCHG2	Port 2 status change	0	No status change in Port 2
		1	Port 2 status change detected
PCHG3	Port 3 status change	0	No status change in Port 3
		1	Port 3 status change detected
PCHG4	Port 4 status change	0	No status change in Port 4
		1	Port 4 status change detected
PCHG5	Embedded device status change	0	No status change in embedded device
		1	Embedded device status change detected

9.4.9 USB HUB Status Register (HSR)

Address: $005D

	Bit 7	6	5	4	3	2	1	Bit 0
Read:	RSEQ	SETUP	TX1ST	0	RPSIZ3	RPSIZ2	RPSIZ1	RPSIZ0
Write:				TX1STR				
Reset:	X	X	0	0	X	X	X	X

= Unimplemented X = Indeterminate

Figure 9-12. USB HUB Status Register (HSR)

RSEQ — HUB Endpoint 0 Receive Sequence Bit

This read only bit indicates the type of data packet last received for HUB Endpoint 0 (DATA0 or DATA1).

1 = DATA1 Token received in last HUB Endpoint 0 Receive
0 = DATA0 Token received in last HUB Endpoint 0 Receive

SETUP — HUB SETUP Token Detect Bit

This read only bit indicates that a valid SETUP token has been received.

1 = Last token received for hub endpoint 0 was a SETUP token
0 = Last token received for hub endpoint 0 was not a SETUP token

TX1ST — HUB Transmit First Flag

This read only bit is set if the HUB Endpoint 0 Data Transmit Flag (TXDF) is set when the USB control logic is setting the HUB Endpoint 0 Data Receive Flag (RXDF). In other words, if an unserviced Endpoint 0 Transmit Flag is still set at the end of an endpoint 0 reception, then this bit will be set. This bit lets the firmware know that the Endpoint 0 transmission happened before the Endpoint 0 reception. Reset clears this bit.

1 = IN transaction occurred before SETUP/OUT
0 = IN transaction occurred after SETUP/OUT

TX1STR — Clear HUB Transmit First Flag

Writing a logic 1 to this write only bit will clear the TX1ST bit if it is set. Writing a logic 0 to the TX1STR has no effect. Reset clears this bit.

RPSIZ3-RPSIZ0 — HUB Endpoint 0 Receive Data Packet Size

These read only bits store the number of data bytes received for the last OUT or SETUP transaction for HUB Endpoint 0. These bits are not affected by reset.

9.4.10 USB HUB Endpoint 0 Data Registers 0-7 (HE0D0-HE0D7)

Address: $0030

	Bit 7	6	5	4	3	2	1	Bit 0
Read:	HE0R07	HE0R06	HE0R05	HE0R04	HE0R03	HE0R02	HE0R01	HE0R00
Write:	HE0T07	HE0T06	HE0T05	HE0T04	HE0T03	HE0T02	HE0T01	HE0T00
Reset:	X	X	X	X	X	X	X	X

↓ ↓

Address: $0037

Read:	HE0R77	HE0R76	HE0R75	HE0R74	HE0R73	HE0R72	HE0R71	HE0R70
Write:	HE0T77	HE0T76	HE0T75	HE0T74	HE0T73	HE0T72	HE0T71	HE0T70
Reset:	X	X	X	X	X	X	X	X

X = Indeterminate

Figure 9-13. USB HUB Endpoint 0 Data Register (HE0D0-HE0D7)

HE0Rx7-HE0Rx0 — HUB Endpoint 0 Receive Data Buffer

These read only bits are serially loaded with OUT token or SETUP token data directed at HUB Endpoint 0. The data is received over the USB's D0+ and D0– pins.

HE0Tx7-HE0Tx0 — HUB Endpoint 0 Transmit Data Buffer

These write only buffers are loaded by software with data to be sent on the USB bus on the next IN token directed at HUB Endpoint 0.

9.5 I/O Register Description of the Embedded Device Function

The USB embedded device function provides a set of control/status registers and twenty-four data registers that provide storage for the buffering of data between the USB embedded device function and the CPU. These registers are shown in Figure 9-14 and Figure 9-15.

Addr.	Register Name		Bit 7	6	5	4	3	2	1	Bit 0
$0047	USB Embedded Device Control Register 2 (DCR2)	Read:	0	0	0	0	ENABLE2	ENABLE1	DSTALL2	DSTALL1
		Write:								
		Reset:	0	0	0	0	0	0	0	0
$0048	USB Embedded Device Address Register (DADDR)	Read:	DEVEN	DADD6	DADD5	DADD4	DADD3	DADD2	DADD1	DADD0
		Write:								
		Reset:	0	0	0	0	0	0	0	0
$0049	USB Embedded Device Interrupt Register 0 (DIR0)	Read:	TXD0F	RXD0F	0	0	TXD0IE	RXD0IE	0	0
		Write:							TXD0FR	RXD0FR
		Reset:	0	0	0	0	0	0	0	0
$004A	USB Embedded Device Interrupt Register 1 (DIR1)	Read:	TXD1F	0	0	0	TXD1IE	0	0	0
		Write:							TXD1FR	
		Reset:	0	0	0	0	0	0	0	0
$004B	USB Embedded Device Control Register 0 (DCR0)	Read:	T0SEQ	DSTALL0	TX0E	RX0E	TP0SIZ3	TP0SIZ2	TP0SIZ and1	TP0SIZ0
		Write:								
		Reset:	0	0	0	0	0	0	0	0
$004C	USB Embedded Device Control Register 1 (DCR1)	Read:	T1SEQ	ENDADD	TX1E	0	TP1SIZ3	TP1SIZ2	TP1SIZ1	TP1SIZ0
		Write:								
		Reset:	0	0	0	0	0	0	0	0
$004D	USB Embedded Device Status Register (DSR)	Read:	DRSEQ	DSETUP	DTX1ST	0	RP0SIZ3	RP0SIZ2	RP0SIZ1	RP0SIZ0
		Write:				DTX1STR				
		Reset:	X	X	0	0	X	X	X	X

= Unimplemented X = Indeterminate

Figure 9-14. Embedded Device Control Register Summary

Addr.	Register Name		Bit 7	6	5	4	3	2	1	Bit 0
$0020	USB Embedded Device Endpoint 0 Data Register 0 (DE0D0)	Read:	DE0R07	DE0R06	DE0R05	DE0R04	DE0R03	DE0R02	DE0R01	DE0R00
		Write:	DE0T07	DE0T06	DE0T05	DE0T04	DE0T03	DE0T02	DE0T01	DE0T00
		Reset:	X	X	X	X	X	X	X	X
$0021	USB Embedded Device Endpoint 0 Data Register 1 (DE0D1)	Read:	DE0R17	DE0R16	DE0R15	DE0R14	DE0R13	DE0R12	DE0R11	DE0R10
		Write:	DE0T17	DE0T16	DE0T15	DE0T14	DE0T13	DE0T12	DE0T11	DE0T10
		Reset:	X	X	X	X	X	X	X	X
$0022	USB Embedded Device Endpoint 0 Data Register 2 (DE0D2)	Read:	DE0R27	DE0R26	DE0R25	DE0R24	DE0R23	DE0R22	DE0R21	DE0R20
		Write:	DE0T27	DE0T26	DE0T25	DE0T24	DE0T23	DE0T22	DE0T21	DE0T20
		Reset:	X	X	X	X	X	X	X	X

= Unimplemented X = Indeterminate

Figure 9-15. Embedded Device Data Register Summary

Addr.	Register Name		Bit 7	6	5	4	3	2	1	Bit 0
$0023	USB Embedded Device Endpoint 0 Data Register 3 (DE0D3)	Read:	DE0R37	DE0R36	DE0R35	DE0R34	DE0R33	DE0R32	DE0R31	DE0R30
		Write:	DE0T37	DE0T36	DE0T35	DE0T34	DE0T33	DE0T32	DE0T31	DE0T30
		Reset:	X	X	X	X	X	X	X	X
$0024	USB Embedded Device Endpoint 0 Data Register 4 (DE0D4)	Read:	DE0R47	DE0R46	DE0R45	DE0R44	DE0R43	DE0R42	DE0R41	DE0R40
		Write:	DE0T47	DE0T46	DE0T45	DE0T44	DE0T43	DE0T42	DE0T41	DE0T40
		Reset:	X	X	X	X	X	X	X	X
$0025	USB Embedded Device Endpoint 0 Data Register 5 (DE0D5)	Read:	DE0R57	DE0R56	DE0R55	DE0R54	DE0R53	DE0R52	DE0R51	DE0R50
		Write:	DE0T57	DE0T56	DE0T55	DE0T54	DE0T53	DE0T52	DE0T51	DE0T50
		Reset:	X	X	X	X	X	X	X	X
$0026	USB Embedded Device Endpoint 0 Data Register 6 (DE0D6)	Read:	DE0R67	DE0R66	DE0R65	DE0R64	DE0R63	DE0R62	DE0R61	DE0R60
		Write:	DE0T67	DE0T66	DE0T65	DE0T64	DE0T63	DE0T62	DE0T61	DE0T60
		Reset:	X	X	X	X	X	X	X	X
$0027	USB Embedded Device Endpoint 0 Data Register 7 (DE0D7)	Read:	DE0R77	DE0R76	DE0R75	DE0R74	DE0R73	DE0R72	DE0R71	DE0R70
		Write:	DE0T77	DE0T76	DE0T75	DE0T74	DE0T73	DE0T72	DE0T71	DE0T70
		Reset:	X	X	X	X	X	X	X	X
$0028	USB Embedded Device Endpoint 1/2 Data Register 0 (DE1D0)	Read:								
		Write:	DE1T07	DE1T06	DE1T05	DE1T04	DE1T03	DE1T02	DE1T01	DE1T00
		Reset:	X	X	X	X	X	X	X	X
$0029	USB Embedded Device Endpoint 1/2 Data Register 1 (DE1D1)	Read:								
		Write:	DE1T17	DE1T16	DE1T15	DE1T14	DE1T13	DE1T12	DE1T11	DE1T10
		Reset:	X	X	X	X	X	X	X	X
$002A	USB Embedded Device Endpoint 1/2 Data Register 2 (DE1D2)	Read:								
		Write:	DE1T27	DE1T26	DE1T25	DE1T24	DE1T23	DE1T22	DE1T21	DE1T20
		Reset:	X	X	X	X	X	X	X	X
$002B	USB Embedded Device Endpoint 1/2 Data Register 3 (DE1D3)	Read:								
		Write:	DE1T37	DE1T36	DE1T35	DE1T34	DE1T33	DE1T32	DE1T31	DE1T30
		Reset:	X	X	X	X	X	X	X	X
$002C	USB Embedded Device Endpoint 1/2 Data Register 4 (DE1D4)	Read:								
		Write:	DE1T47	DE1T46	DE1T45	DE1T44	DE1T43	DE1T42	DE1T41	DE1T40
		Reset:	X	X	X	X	X	X	X	X
$002D	USB Embedded Device Endpoint 1/2 Data Register 5 (DE1D5)	Read:								
		Write:	DE1T57	DE1T56	DE1T55	DE1T54	DE1T53	DE1T52	DE1T51	DE1T50
		Reset:	X	X	X	X	X	X	X	X
$002E	USB Embedded Device Endpoint 1/2 Data Register 6 (DE1D6)	Read:								
		Write:	DE1T67	DE1T66	DE1T65	DE1T64	DE1T63	DE1T62	DE1T61	DE1T60
		Reset:	X	X	X	X	X	X	X	X
$002F	USB Embedded Device Endpoint 1/2 Data Register 7 (DE1D7)	Read:								
		Write:	DE1T77	DE1T76	DE1T75	DE1T74	DE1T73	DE1T72	DE1T71	DE1T70
		Reset:	X	X	X	X	X	X	X	X

= Unimplemented X = Indeterminate

Figure 9-15. Embedded Device Data Register Summary (Continued)

9.5.1 USB Embedded Device Address Register (DADDR)

Address: $0048

	Bit 7	6	5	4	3	2	1	Bit 0
Read: Write:	DEVEN	DADD6	DADD5	DADD4	DADD3	DADD2	DADD1	DADD0
Reset:	0	0	0	0	0	0	0	0

Figure 9-16. USB Embedded Device Address Register (DADDR)

DEVEN — Enable USB Embedded Device

These bit enable or disable the embedded device function. It is used together with PEN1-PEN4 to control the enumeration sequence. Reset clears these bits.

1 = USB Embedded Device enabled
0 = USB Embedded Device disabled

DADD6-DADD0 — USB Embedded Device Function Address

These bits specify the address of the embedded device function. Reset clears these bits.

9.5.2 USB Embedded Device Interrupt Register 0 (DIR0)

Address: $0049

	Bit 7	6	5	4	3	2	1	Bit 0
Read:	TXD0F	RXD0F	0	0	TXD0IE	RXD0IE	0	0
Write:							TXD0FR	RXD0FR
Reset:	0	0	0	0	0	0	0	0

= Unimplemented

Figure 9-17. USB Embedded Device Interrupt Register 0 (DIR0)

TXD0F — Embedded Device Endpoint 0 Data Transmit Flag

This read only bit is set after the data stored in embedded device Endpoint 0 transmit buffers has been sent and an ACK handshake packet from the host is received. Once the next set of data is ready in the transmit buffers, software must clear this flag by writing a logic 1 to the TXD0FR bit. To enable the next data packet transmission, TX0E must also be set. If TXD0F bit is not cleared, a NAK handshake will be returned in the next IN transaction. Reset clears this bit. Writing to TXD0F has no effect.

1 = Transmit on embedded device Endpoint 0 has occurred
0 = Transmit on embedded device Endpoint 0 has not occurred

RXD0F — Embedded Device Endpoint 0 Data Receive Flag

This read only bit is set after the USB embedded device module has received a data packet and responded with an ACK handshake packet. Software must clear this flag by writing a logic 1 to the RXD0FR bit after all of the received data has been read. Software must also set RX0E bit to one to enable the next data packet reception. If RXD0F bit is not cleared, a NAK handshake will be returned in the next OUT transaction.

Reset clears this bit. Writing to RXD0F has no effect.

1 = Receive on embedded device Endpoint 0 has occurred
0 = Receive on embedded device Endpoint 0 has not occurred

TXD0IE — Embedded Device Endpoint 0 Transmit Interrupt Enable

This read/write bit enables the Transmit Embedded Device Endpoint 0 to generate CPU interrupt requests when the TXD0F bit becomes set. Reset clears the TXD0IE bit.

1 = Transmit Embedded Device Endpoint 0 can generate a CPU interrupt request
0 = Transmit Embedded Device Endpoint 0 cannot generate a CPU interrupt request

RXD0IE — Embedded Device Endpoint 0 Receive Interrupt Enable

This read/write bit enables the Receive Embedded Device Endpoint 0 to generate CPU interrupt requests when the RXD0F bit becomes set. Reset clears the RXD0IE bit.

1 = Receive Embedded Device Endpoint 0 can generate a CPU interrupt request
0 = Receive Embedded Device Endpoint 0 cannot generate a CPU interrupt request

TXD0FR — Embedded Device Endpoint 0 Transmit Flag Reset

Writing a logic 1 to this write only bit will clear the TXD0F bit if it is set. Writing a logic 0 to TXD0FR has no effect. Reset clears this bit.

RXD0FR — Embedded Device Endpoint 0 Receive Flag Reset

Writing a logic 1 to this write only bit will clear the RXD0F bit if it is set. Writing a logic 0 to RXD0FR has no effect. Reset clears this bit.

9.5.3 USB Embedded Device Interrupt Register 1 (DIR1)

Address: $004A

	Bit 7	6	5	4	3	2	1	Bit 0
Read:	TXD1F	0	0	0	TXD1IE	0	0	0
Write:							TXD1FR	
Reset:	0	0	0	0	0	0	0	0

= Unimplemented

Figure 9-18. USB Embedded Device Interrupt Register 1 (DIR1)

TXD1F — Embedded Device Endpoint 1/2 Data Transmit Flag

This read only bit is shared by Endpoint 1 and Endpoint 2 of the embedded device. It is set after the data stored in the shared Endpoint 1/2 transmit buffer of the embedded device has been sent and an ACK handshake packet from the host is received. Once the next set of data is ready in the transmit buffers, software must clear this flag by writing a logic 1 to the TXD1FR bit. To enable the next data packet transmission, TX1E must also be set. If TXD1F bit is not cleared, a NAK handshake will be returned in the next IN transaction. Reset clears this bit. Writing to TXD1F has no effect.

1 = Transmit on Endpoint 1 or Endpoint 2 of the embedded device has occurred
0 = Transmit on Endpoint 1 or Endpoint 2 of the embedded device has not occurred

TXD1IE — Embedded Device Endpoint 1/2 Transmit Interrupt Enable

This read/write bit enables the USB to generate CPU interrupt requests when the shared Transmit Endpoint 1/2 interrupt flag bit of the embedded device (TXD1F) becomes set. Reset clears the TXD1IE bit.

1 = Transmit embedded device Endpoints 1 and 2 can generate a CPU interrupt request
0 = Transmit embedded device Endpoints 1 and 2 cannot generate a CPU interrupt request

TXD1FR — Embedded Device Endpoint 1/2 Transmit Flag Reset

Writing a logic 1 to this write only bit will clear the TXD1F bit if it is set. Writing a logic 0 to TXD1FR has no effect. Reset clears this bit.

9.5.4 USB Embedded Device Control Register 0 (DCR0)

Address: $004B

	Bit 7	6	5	4	3	2	1	Bit 0
Read: Write:	T0SEQ	DSTALL0	TX0E	RX0E	TP0SIZ3	TP0SIZ2	TP0SIZ1	TP0SIZ0
Reset:	0	0	0	0	0	0	0	0

Figure 9-19. USB Embedded Device Control Register 0 (DCR0)

T0SEQ — Embedded Device Endpoint 0 Transmit Sequence Bit

This read/write bit determines which type of data packet (DATA0 or DATA1) will be sent during the next IN transaction directed at Endpoint 0. Toggling of this bit must be controlled by software. Reset clears this bit.

1 = DATA1 Token active for next embedded device Endpoint 0 transmit
0 = DATA0 Token active for next embedded device Endpoint 0 transmit

DSTALL0 — Embedded Device Endpoint 0 Force Stall Bit

This read/write bit causes embedded device Endpoint 0 to return a STALL handshake when polled by either an IN or OUT token by the host. The USB hardware clears this bit when a SETUP token is received. Reset clears this bit.

1 = Send STALL handshake
0 = Default

TX0E — Embedded Device Endpoint 0 Transmit Enable

This read/write bit enables a transmit to occur when the USB Host controller sends an IN token to the embedded device Endpoint 0. Software should set this bit when data is ready to be transmitted. It must be cleared by software when no more embedded device Endpoint 0 data needs to be transmitted.

If this bit is 0 or the TXD0F is set, the USB will respond with a NAK handshake to any embedded device Endpoint 0 IN tokens. Reset clears this bit.

1 = Data is ready to be sent
0 = Data is not ready. Respond with NAK

RX0E — Embedded Device Endpoint 0 Receive Enable

This read/write bit enables a receive to occur when the USB Host controller sends an OUT token to the embedded device Endpoint 0. Software should set this bit when data is ready to be received. It must be cleared by software when data cannot be received.

If this bit is 0 or the RXD0F is set, the USB will respond with a NAK handshake to any embedded device Endpoint 0 OUT tokens. Reset clears this bit.

1 = Data is ready to be received
0 = Not ready for data. Respond with NAK

TP0SIZ3-TP0SIZ0 — Embedded Device Endpoint 0 Transmit Data Packet Size

These read/write bits store the number of transmit data bytes for the next IN token request for embedded device Endpoint 0. These bits are cleared by reset.

9.5.5 USB Embedded Device Control Register 1 (DCR1)

Address: $004C

	Bit 7	6	5	4	3	2	1	Bit 0
Read:	T1SEQ	ENDADD	TX1E	0	TP1SIZ3	TP1SIZ2	TP1SIZ1	TP1SIZ0
Write:								
Reset:	0	0	0	0	0	0	0	0

= Unimplemented

Figure 9-20. USB Embedded Device Control Register 1 (DCR1)

T1SEQ — Embedded Device Endpoint 1/2 Transmit Sequence Bit

This read/write bit determines which type of data packet (DATA0 or DATA1) will be sent during the next IN transaction directed to embedded device Endpoint 1 or 2. Toggling of this bit must be controlled by software. Reset clears this bit.

1 = DATA1 Token active for next embedded device Endpoint 1/2 transmit
0 = DATA0 Token active for next embedded device Endpoint 1/2 transmit

ENDADD — Endpoint Address Select

This read/write bit specifies whether the data inside the registers DE1D0-DE1D7 are used for embedded device Endpoint 1 or 2. If all the conditions for a successful Endpoint 2 USB response to a host's IN token are satisfied (TXD1F=0, TX1E=1, DSTALL2=0, and ENABLE2=1) except that the ENDADD bit is configured for Endpoint 1, the USB responds with a NAK handshake packet. Reset clears this bit.

1 = The data buffers are used for embedded device Endpoint 2
0 = The data buffers are used for embedded device Endpoint 1

TX1E — Embedded Device Endpoint 1/2 Transmit Enable

This read/write bit enables a transmit to occur when the USB Host controller sends an IN token to Endpoint 1 or Endpoint 2 of the embedded device. The appropriate endpoint enable bit, ENABLE1 or ENABLE2 bit in the DCR2 register, should also be set. Software should set the TX1E bit when data is ready to be transmitted. It must be cleared by software when no more data needs to be transmitted.

If this bit is 0 or the TXD1F is set, the USB will respond with a NAK handshake to any Endpoint 1 or Endpoint 2 directed IN tokens. Reset clears this bit.

1 = Data is ready to be sent.
0 = Data is not ready. Respond with NAK.

TP1SIZ3-TP1SIZ0 — Embedded Device Endpoint 1/2 Transmit Data Packet Size

These read/write bits store the number of transmit data bytes for the next IN token request for embedded device Endpoint 1 or Endpoint 2. These bits are cleared by reset.

9.5.6 USB Embedded Device Status Register (DSR)

Address: $004D

	Bit 7	6	5	4	3	2	1	Bit 0
Read:	DRSEQ	DSETUP	DTX1ST	0	RP0SIZ3	RPS0IZ2	RP0SIZ1	RP0SIZ0
Write:				DTX1STR				
Reset:	X	X	0	0	X	X	X	X

= Unimplemented X = Indeterminate

Figure 9-21. USB Embedded Device Status Register (DSR)

DRSEQ — Embedded Device Endpoint 0 Receive Sequence Bit

This read only bit indicates the type of data packet last received for embedded device Endpoint 0 (DATA0 or DATA1).

1 = DATA1 Token received in last embedded device Endpoint 0 receive
0 = DATA0 Token received in last embedded device Endpoint 0 receive

DSETUP — Embedded Device SETUP Token Detect Bit

This read only bit indicates that a valid SETUP token has been received.

1 = Last token received for Endpoint 0 was a SETUP token
0 = Last token received for Endpoint 0 was not a SETUP token

DTX1ST — Embedded Device Transmit First Flag

This read only bit is set if the embedded device Endpoint 0 Data Transmit Flag (TXD0F) is set when the USB control logic is setting the embedded device Endpoint 0 Data Receive Flag (RXD0F). In other words, if an unserviced Endpoint 0 Transmit Flag is still set at the end of an endpoint 0 reception, then this bit will be set. This bit lets the firmware know that the Endpoint 0 transmission happened before the Endpoint 0 reception. Reset clears this bit.

1 = IN transaction occurred before SETUP/OUT
0 = IN transaction occurred after SETUP/OUT

DTX1STR — Clear Transmit First Flag

Writing a logic 1 to this write only bit will clear the DTX1ST bit if it is set. Writing a logic 0 to the DTX1STR has no effect. Reset clears this bit.

RP0SIZ3-RP0SIZ0 — Embedded Device Endpoint 0 Receive Data Packet Size

These read only bits store the number of data bytes received for the last OUT or SETUP transaction for embedded device Endpoint 0. These bits are not affected by reset.

9.5.7 USB Embedded Device Control Register 2 (DCR2)

Address: $0047

	Bit 7	6	5	4	3	2	1	Bit 0
Read:	0	0	0	0	ENABLE2	ENABLE1	DSTALL2	DSTALL1
Write:								
Reset:	0	0	0	0	0	0	0	0

= Unimplemented

Figure 9-22. USB Embedded Device Control Register 2 (DCR2)

ENABLE2 — Embedded Device Endpoint 2 Enable

This read/write bit enables embedded device Endpoint 2 and allows the USB to respond to IN packets addressed to this endpoint. Reset clears this bit.

1 = Embedded device Endpoint 2 is enabled and can respond to an IN token
0 = Embedded device Endpoint 2 is disabled

ENABLE1 — Embedded Device Endpoint 1 Enable

This read/write bit enables embedded device Endpoint 1 and allows the USB to respond to IN packets addressed to this endpoint. Reset clears this bit.

1 = Embedded device Endpoint 1 is enabled and can respond to an IN token
0 = Embedded device Endpoint 1 is disabled

DSTALL2 — Embedded Device Endpoint 2 Force Stall Bit

This read/write bit causes embedded device Endpoint 2 to return a STALL handshake when polled by either an IN or OUT token by the USB Host Controller. Reset clears this bit.

1 = Send STALL handshake
0 = Default

DSTALL1 — Embedded Device Endpoint 1 Force Stall Bit

This read/write bit causes embedded device Endpoint 1 to return a STALL handshake when polled by either an IN or OUT token by the USB Host Controller. Reset clears this bit.

1 = Send STALL handshake
0 = Default

9.5.8 USB Embedded Device Endpoint 0 Data Registers (DE0D0-DE0D7)

Address: $0020	Bit 7	6	5	4	3	2	1	Bit 0
Read:	DE0R07	DE0R06	DE0R05	DE0R04	DE0R03	DE0R02	DE0R01	DE0R00
Write:	DE0T07	DE0T06	DE0T05	DE0T04	DE0T03	DE0T02	DE0T01	DE0T00
Reset:	X	X	X	X	X	X	X	X
↓								↓
Address: $0027								
Read:	DE0R77	DE0R76	DE0R75	DE0R74	DE0R73	DE0R72	DE0R71	DE0R70
Write:	DE0T77	DE0T76	DE0T75	DE0T74	DE0T73	DE0T72	DE0T71	DE0T70
Reset:	X	X	X	X	X	X	X	X

X = Indeterminate

Figure 9-23. USB Embedded Device Endpoint 0 Data Register (UE0D0-UE0D7)

DE0Rx7-DE0Rx0 — Embedded Device Endpoint 0 Receive Data Buffer

These read only bits are serially loaded with OUT token or SETUP token data directed at embedded device Endpoint 0. The data is received over the USB's D0+ and D0– pins.

DE0Tx7-DE0Tx0 — Embedded Device Endpoint 0 Transmit Data Buffer

These write only buffers are loaded by software with data to be sent on the USB bus on the next IN token directed at embedded device Endpoint 0.

9.5.9 USB Embedded Device Endpoint 1/2 Data Registers (DE1D0-DE1D7)

Address: $0028	Bit 7	6	5	4	3	2	1	Bit 0
Read:								
Write:	DE1T07	DE1T06	DE1T05	DE1T04	DE1T03	DE1T02	DE1T01	DE1T00
Reset:	X	X	X	X	X	X	X	X
↓								↓
Address: $002F								
Read:								
Write:	DE1T77	DE1T76	DE1T75	DE1T74	DE1T73	DE1T72	DE1T71	DE1T70
Reset:	X	X	X	X	X	X	X	X

= Unimplemented X = Indeterminate

Figure 9-24. USB Embedded Device Endpoint 0 Data Register (UE0D0-UE0D7)

DE1TD7-DE1TD0 — Embedded Device Endpoint 1/ Endpoint 2 Transmit Data Buffer

These write only buffers are loaded by software with data to be sent on the USB bus on the next IN token directed at Endpoint 1 or Endpoint 2 of the embedded device. These buffers are shared by embedded device Endpoints 1 and 2 and depend on proper configuration of the ENDADD bit.

Chapter 10
Monitor ROM (MON)

10.1 Introduction

This section describes the monitor ROM. The monitor ROM allows complete testing of the MCU through a single-wire interface with a host computer.

10.2 Features

Features of the monitor ROM include the following:

- Normal User-Mode Pin Functionality
- One Pin Dedicated to Serial Communication between Monitor ROM and Host Computer
- Standard Mark/Space Non-Return-to-Zero (NRZ) Communication with Host Computer
- 4800 Baud to 28.8 kBaud Communication with Host Computer
- Execution of Code in RAM or ROM

10.3 Functional Description

The monitor ROM receives and executes commands from a host computer. Figure 10-1 shows a sample circuit used to enter monitor mode and communicate with a host computer via a standard RS-232 interface.

Simple monitor commands can access any memory address. In monitor mode, the MCU can execute host-computer code in RAM while all MCU pins retain normal operating mode functions. All communication between the host computer and the MCU is through the PTA0 pin. A level-shifting and multiplexing interface is required between PTA0 and the host computer. PTA0 is used in a wired-OR configuration and requires a pull-up resistor.

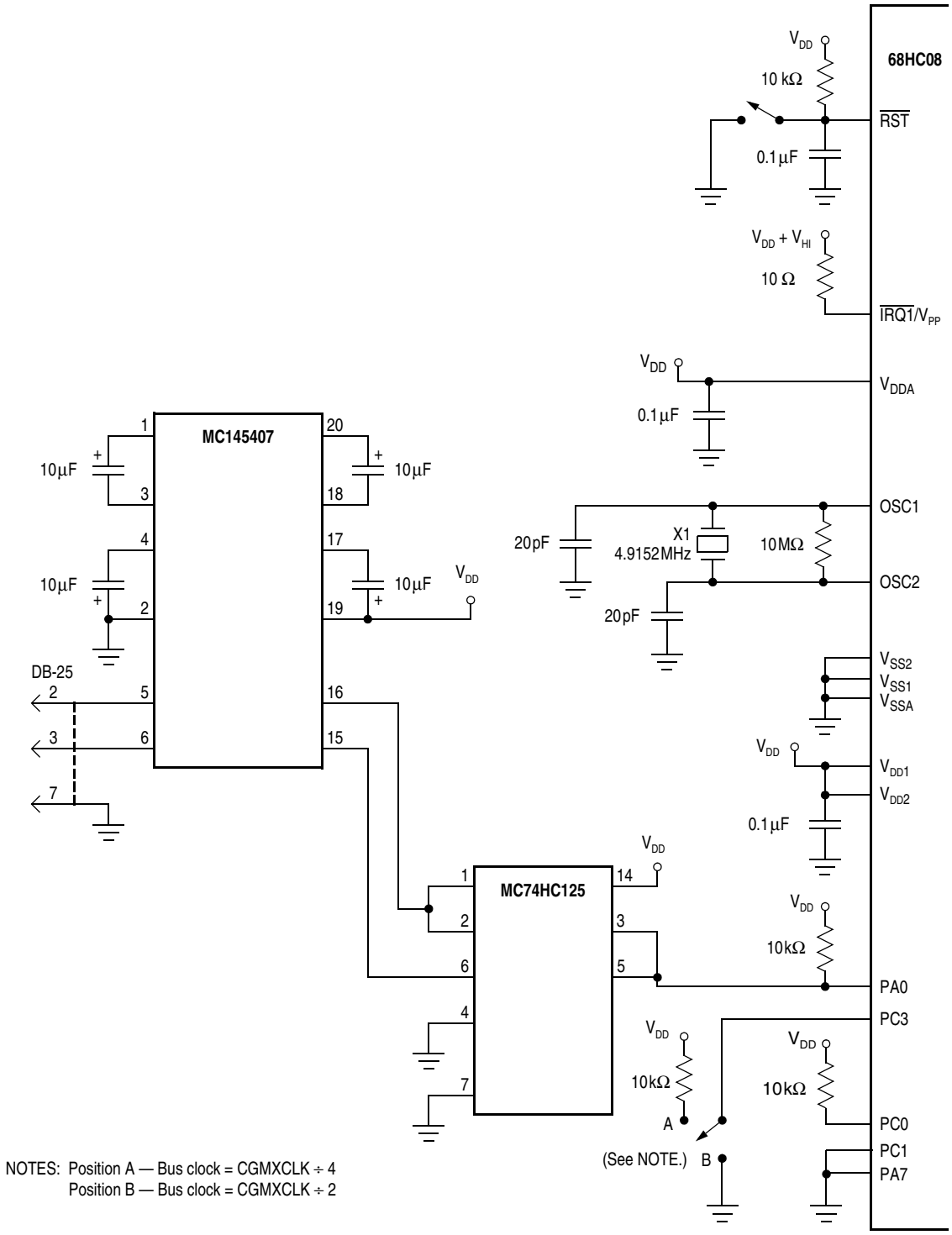

Figure 10-1. Monitor Mode Circuit

10.3.1 Entering Monitor Mode

Table 10-1 shows the pin conditions for entering monitor mode.

Table 10-1. Mode Selection

$\overline{IRQ1}/V_{PP}$ Pin	PC0 Pin	PC1 Pin	PA0 Pin	PC3 Pin	Mode	CGMOUT	Bus Frequency
$V_{DD} + V_{HI}$	1	0	1	1	Monitor	CGMXCLK ÷ 2	CGMOUT ÷ 2
$V_{DD} + V_{HI}$	1	0	1	0	Monitor	CGMXCLK	CGMOUT ÷ 2

If PTC3 is low upon monitor mode entry, CGMOUT is equal to the crystal frequency. The bus frequency in this case is a divide-by-two of the input clock. If PTC3 is high upon monitor mode entry, the bus frequency will be a divide-by-four of the input clock.

NOTE

Holding the PTC3 pin low when entering monitor mode causes a bypass of a divide-by-two stage at the oscillator. The CGMOUT frequency is equal to the CGMXCLK frequency, and the OSC1 input directly generates internal bus clocks. In this case, the OSC1 signal must have a 50% duty cycle at maximum bus frequency.

Enter monitor mode with the pin configuration shown above by pulling $\overline{RST}$ low and then high. The rising edge of $\overline{RST}$ latches monitor mode. Once monitor mode is latched, the values on the specified pins can change.

Once out of reset, the MCU monitor mode firmware then sends a break signal (10 consecutive logic zeros) to the host computer, indicating that it is ready to receive a command. The break signal also provides a timing reference to allow the host to determine the necessary baud rate.

Monitor mode uses different vectors for reset, SWI, and break interrupt. The alternate vectors are in the $FE page instead of the $FF page and allow code execution from the internal monitor firmware instead of user code.

When the host computer has completed downloading code into the MCU RAM, This code can be executed by driving PTA0 low while asserting $\overline{RST}$ low and then high. The internal monitor ROM firmware will interpret the low on PTA0 as an indication to jump to RAM, and execution control will then continue from RAM. Execution of an SWI from the downloaded code will return program control to the internal monitor ROM firmware. Alternatively, the host can send a RUN command, which executes an RTI, and this can be used to send control to the address on the stack pointer.

The COP module is disabled in monitor mode as long as $V_{DD} + V_{HI}$ is applied to either the $\overline{IRQ1}/V_{PP}$ pin or the $\overline{RST}$ pin. (See Chapter 7 System Integration Module (SIM) for more information on modes of operation.)

Table 10-2 is a summary of the differences between user mode and monitor mode.

Table 10-2. Mode Differences

Modes	Functions						
	COP	Reset Vector High	Reset Vector Low	Break Vector High	Break Vector Low	SWI Vector High	SWI Vector Low
User	Enabled	$FFFE	$FFFF	$FFFC	$FFFD	$FFFC	$FFFD
Monitor	Disabled[1]	$FEFE	$FEFF	$FEFC	$FEFD	$FEFC	$FEFD

1. If the high voltage (V_{DD} + V_{HI}) is removed from the $\overline{IRQ1}$/V_{PP} pin or the $\overline{RST}$ pin, the SIM asserts its COP enable output. The COP is a mask option enabled or disabled by the COPD bit in the configuration register.

10.3.2 Data Format

Communication with the monitor ROM is in standard non-return-to-zero (NRZ) mark/space data format. (See Figure 10-2 and Figure 10-3.)

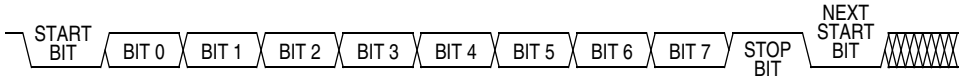

Figure 10-2. Monitor Data Format

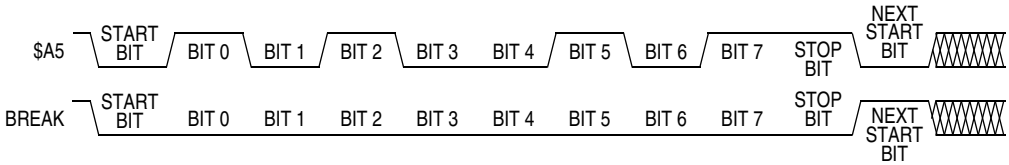

Figure 10-3. Sample Monitor Waveforms

The data transmit and receive rate can be anywhere from 4800 baud to 28.8 kbaud. Transmit and receive baud rates must be identical.

10.3.3 Echoing

As shown in Figure 10-4, the monitor ROM immediately echoes each received byte back to the PTA0 pin for error checking.

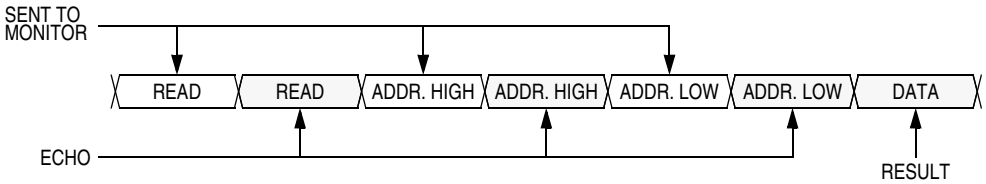

Figure 10-4. Read Transaction

Any result of a command appears after the echo of the last byte of the command.

10.3.4 Break Signal

A start bit followed by nine low bits is a break signal. (See Figure 10-5.) When the monitor receives a break signal, it drives the PTA0 pin high for the duration of two bits before echoing the break signal.

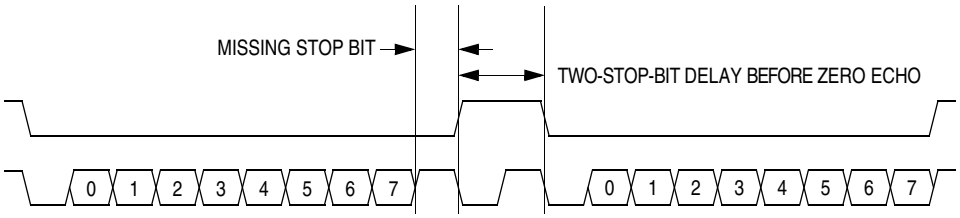

Figure 10-5. Break Transaction

10.3.5 Commands

The monitor ROM uses the following commands:

- READ (read memory)
- WRITE (write memory)
- IREAD (indexed read)
- IWRITE (indexed write)
- READSP (read stack pointer)
- RUN (run user program)

Table 10-3. READ (Read Memory) Command

Description	Read byte from memory
Operand	Specifies 2-byte address in high byte:low byte order
Data Returned	Returns contents of specified address
Opcode	$4A
Command Sequence	

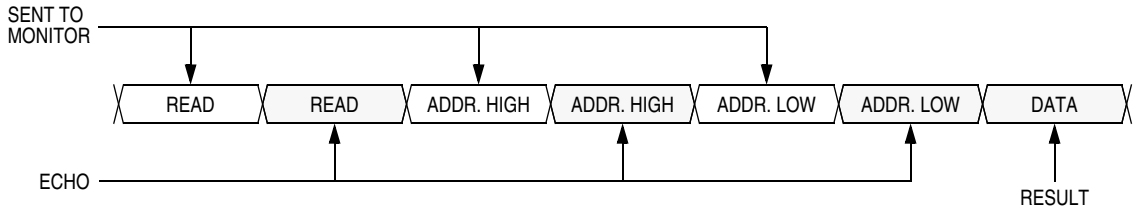

Table 10-4. WRITE (Write Memory) Command

Description	Write byte to memory
Operand	Specifies 2-byte address in high byte:low byte order; low byte followed by data byte
Data Returned	None
Opcode	$49
Command Sequence	

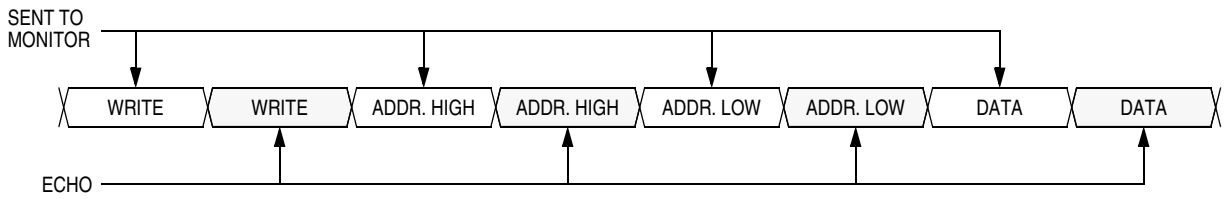

Table 10-5. IREAD (Indexed Read) Command

Description	Read next 2 bytes in memory from last address accessed
Operand	Specifies 2-byte address in high byte:low byte order
Data Returned	Returns contents of next two addresses
Opcode	$1A
Command Sequence	

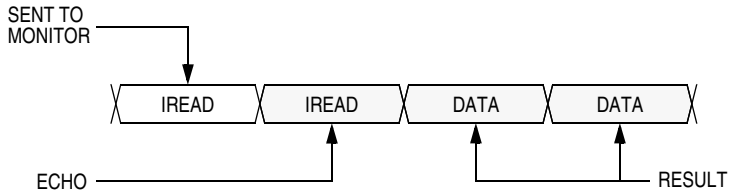

Table 10-6. IWRITE (Indexed Write) Command

Description	Write to last address accessed + 1
Operand	Specifies single data byte
Data Returned	None
Opcode	$19
Command Sequence	

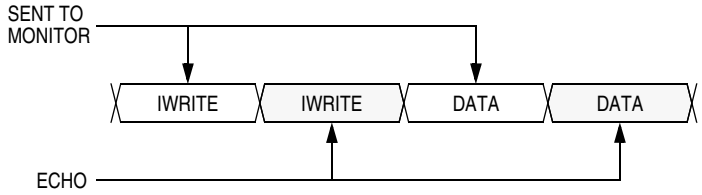

NOTE

A sequence of IREAD or IWRITE commands can sequentially access a block of memory over the full 64-Kbyte memory map.

Table 10-7. READSP (Read Stack Pointer) Command

Description	Reads stack pointer
Operand	None
Data Returned	Returns stack pointer in high byte:low byte order
Opcode	$0C
Command Sequence	

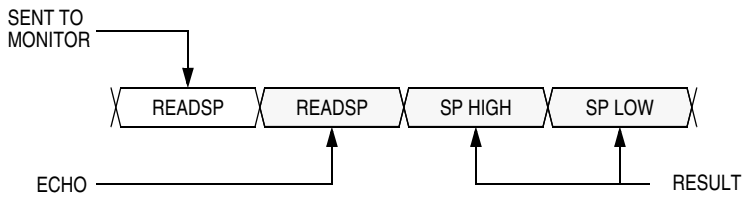

Table 10-8. RUN (Run User Program) Command

Description	Executes RTI instruction
Operand	None
Data Returned	None
Opcode	$28
Command Sequence	

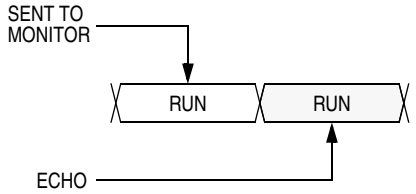

10.3.6 Baud Rate

The communication baud rate is controlled by crystal frequency and the state of the PTC3 pin upon entry into monitor mode. When PTC3 is high, the divide by ratio is 1024. If the PTC3 pin is at logic zero upon entry into monitor mode, the divide by ratio is 512.

Table 10-9. Monitor Baud Rate Selection

Crystal Frequency (MHz)	PTC3 pin	Baud Rate
4.9152MHz	0	9600 bps
4.9152MHz	1	4800 bps

Chapter 11
Timer Interface Module (TIM)

11.1 Introduction

This section describes the timer interface module. The TIM is a two-channel timer that provides a timing reference with input capture, output compare, and pulse-width-modulation functions. Figure 11-1 is a block diagram of the TIM.

11.2 Features

Features of the TIM include the following:

- Two input capture/output compare channels
  - Rising-edge, falling-edge, or any-edge input capture trigger
  - Set, clear, or toggle output compare action
- Buffered and unbuffered pulse width modulation (PWM) signal generation
- Programmable TIM clock input
  - Seven-frequency internal bus clock prescaler selection
  - External TIM clock input (bus frequency ÷2 maximum)
- Free-running or modulo up-count operation
- Toggle any channel pin on overflow
- TIM counter stop and reset bits

11.3 Pin Name Conventions

The TIM share three I/O pins with three port E I/O pins. The full name of the TIM I/O pin is listed in Table 11-1. The generic pin name appear in the text that follows.

Table 11-1. TIM Pin Name Conventions

TIM Generic Pin Names:	TCLK	TCH0	TCH1
Full TIM Pin Names:	PTE0/TCLK	PTE1/TCH0	PTE2/TCH1

11.4 Functional Description

Figure 11-1 shows the structure of the TIM. The central component of the TIM is the 16-bit TIM counter that can operate as a free-running counter or a modulo up-counter. The TIM counter provides the timing reference for the input capture and output compare functions. The TIM counter modulo registers, TMODH:TMODL, control the modulo value of the TIM counter. Software can read the TIM counter value at any time without affecting the counting sequence.

The two TIM channels are programmable independently as input capture or output compare channels.

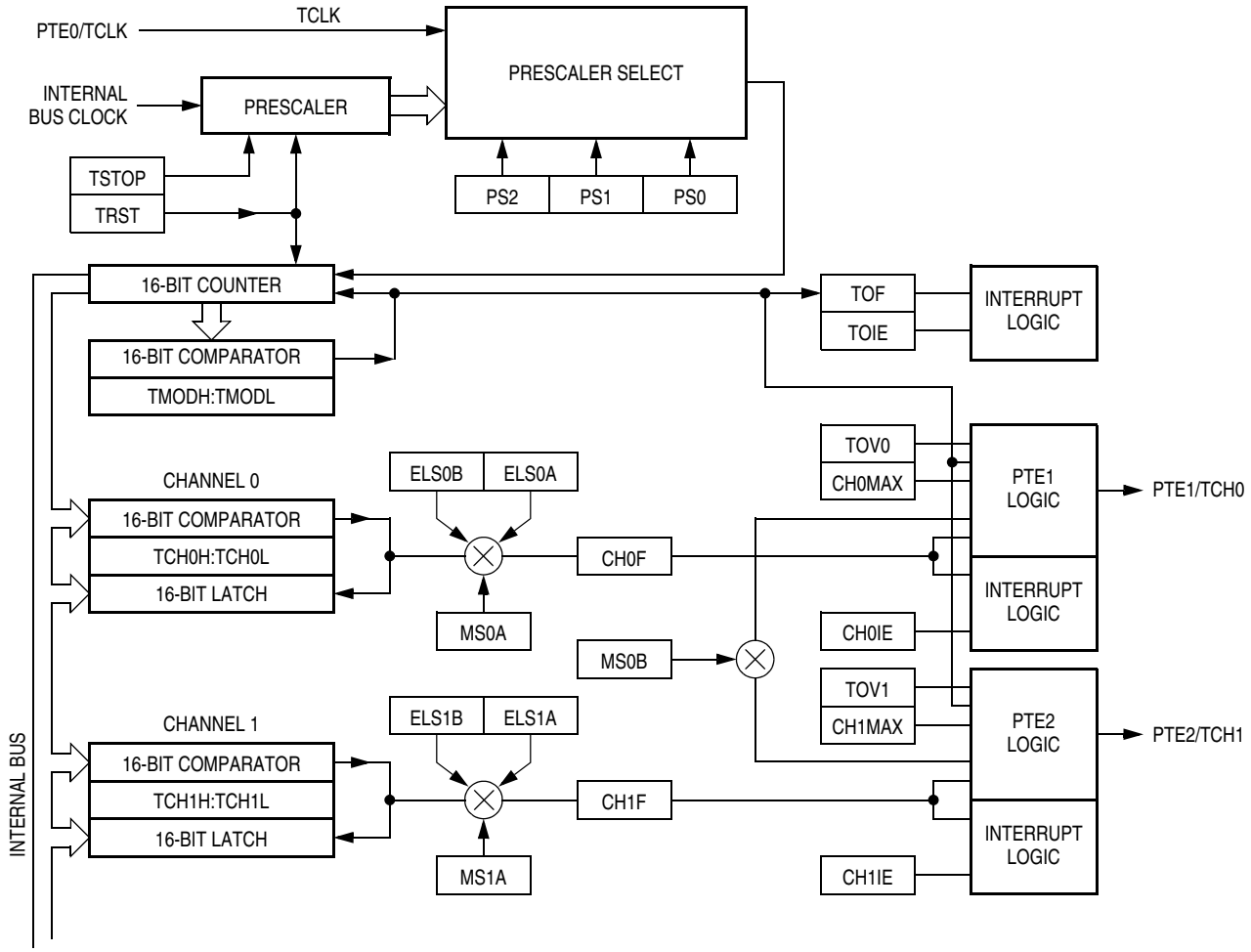

Figure 11-1. TIM Block Diagram

Addr.	Register Name		Bit 7	6	5	4	3	2	1	Bit 0
$0010	TIM Status/Control Register (TSC)	Read:	TOF	TOIE	TSTOP	0	0	PS2	PS1	PS0
		Write:	0			TRST				
		Reset:	0	0	1	0	0	0	0	0
$0012	TIM Counter Register High (TCNTH)	Read:	Bit15	Bit14	Bit13	Bit12	Bit11	Bit10	Bit9	Bit8
		Write:								
		Reset:	0	0	0	0	0	0	0	0
$0013	TIM Counter Register Low (TCNTL)	Read:	Bit7	Bit6	Bit5	Bit4	Bit3	Bit2	Bit1	Bit0
		Write:								
		Reset:	0	0	0	0	0	0	0	0
$0014	TIM Counter Modulo Register High (TMODH)	Read:	Bit15	Bit14	Bit13	Bit12	Bit11	Bit10	Bit9	Bit8
		Write:								
		Reset:	1	1	1	1	1	1	1	1

= Unimplemented X = Indeterminate

Figure 11-2. TIM I/O Register Summary

Addr.	Register Name		Bit 7	6	5	4	3	2	1	Bit 0
$0015	TIM Counter Modulo Register Low (TMODL)	Read: Write:	Bit7	Bit6	Bit5	Bit4	Bit3	Bit2	Bit1	Bit0
		Reset:	1	1	1	1	1	1	1	1
$0016	TIM Channel 0 Status and Control Register (TSC0)	Read:	CH0F	CH0IE	MS0B	MS0A	ELS0B	ELS0A	TOV0	CH0MAX
		Write:	0							
		Reset:	0	0	0	0	0	0	0	0
$0017	TIM Channel 0 Register High (TCH0H)	Read: Write:	Bit15	Bit14	Bit13	Bit12	Bit11	Bit10	Bit9	Bit8
		Reset:	X	X	X	X	X	X	X	X
$0018	TIM Channel 0 Register Low (TCH0L)	Read: Write:	Bit7	Bit6	Bit5	Bit4	Bit3	Bit2	Bit1	Bit0
		Reset:	X	X	X	X	X	X	X	X
$0019	TIM Channel 1 Status and Control Register (TSC1)	Read:	CH1F	CH1IE	0	MS1A	ELS1B	ELS1A	TOV1	CH1MAX
		Write:	0							
		Reset:	0	0	0	0	0	0	0	0
$001A	TIM Channel 1 Register High (TCH1H)	Read: Write:	Bit15	Bit14	Bit13	Bit12	Bit11	Bit10	Bit9	Bit8
		Reset:	X	X	X	X	X	X	X	X
$001B	TIM Channel 1 Register Low (TCH1L)	Read: Write:	Bit7	Bit6	Bit5	Bit4	Bit3	Bit2	Bit1	Bit0
		Reset:	X	X	X	X	X	X	X	X

= Unimplemented X = Indeterminate

Figure 11-2. TIM I/O Register Summary (Continued)

11.4.1 TIM Counter Prescaler

The TIM clock source can be one of the seven prescaler outputs or the TIM clock pin, PTE0/TCLK. The prescaler generates seven clock rates from the internal bus clock. The prescaler select bits, PS[2:0], in the TIM status and control register (TSC) select the TIM clock source.

11.4.2 Input Capture

With the input capture function, the TIM can capture the time at which an external event occurs. When an active edge occurs on the pin of an input capture channel, the TIM latches the contents of the TIM counter into the TIM channel registers, TCHxH:TCHxL. The polarity of the active edge is programmable. Input captures can generate TIM CPU interrupt requests.

11.4.3 Output Compare

With the output compare function, the TIM can generate a periodic pulse with a programmable polarity, duration, and frequency. When the counter reaches the value in the registers of an output compare channel, the TIM can set, clear, or toggle the channel pin. Output compares can generate TIM CPU interrupt requests.

11.4.3.1 Unbuffered Output Compare

Any output compare channel can generate unbuffered output compare pulses as described in 11.4.3 Output Compare. The pulses are unbuffered because changing the output compare value requires writing the new value over the old value currently in the TIM channel registers.

An unsynchronized write to the TIM channel registers to change an output compare value could cause incorrect operation for up to two counter overflow periods. For example, writing a new value before the counter reaches the old value but after the counter reaches the new value prevents any compare during that counter overflow period. Also, using a TIM overflow interrupt routine to write a new, smaller output compare value may cause the compare to be missed. The TIM may pass the new value before it is written.

Use the following methods to synchronize unbuffered changes in the output compare value on channel x:

- When changing to a smaller value, enable channel x output compare interrupts and write the new value in the output compare interrupt routine. The output compare interrupt occurs at the end of the current output compare pulse. The interrupt routine has until the end of the counter overflow period to write the new value.
- When changing to a larger output compare value, enable TIM overflow interrupts and write the new value in the TIM overflow interrupt routine. The TIM overflow interrupt occurs at the end of the current counter overflow period. Writing a larger value in an output compare interrupt routine (at the end of the current pulse) could cause two output compares to occur in the same counter overflow period.

11.4.3.2 Buffered Output Compare

Channels 0 and 1 can be linked to form a buffered output compare channel whose output appears on the PTE1/TCH0 pin. The TIM channel registers of the linked pair alternately control the output.

Setting the MS0B bit in TIM channel 0 status and control register (TSC0) links channel 0 and channel 1. The output compare value in the TIM channel 0 registers initially controls the output on the PTE1/TCH0 pin. Writing to the TIM channel 1 registers enables the TIM channel 1 registers to synchronously control the output after the TIM overflows. At each subsequent overflow, the TIM channel registers (0 or 1) that control the output are the ones written to last. TSC0 controls and monitors the buffered output compare function, and TIM channel 1 status and control register (TSC1) is unused. While the MS0B bit is set, the channel 1 pin, PTE2/TCH1, is available as a general-purpose I/O pin.

NOTE

In buffered output compare operation, do not write new output compare values to the currently active channel registers. User software should track the currently active channel to prevent writing a new value to the active channel. Writing to the active channel registers is the same as generating unbuffered output compares.

11.4.4 Pulse Width Modulation (PWM)

By using the toggle-on-overflow feature with an output compare channel, the TIM can generate a PWM signal. The value in the TIM counter modulo registers determines the period of the PWM signal. The channel pin toggles when the counter reaches the value in the TIM counter modulo registers. The time between overflows is the period of the PWM signal.

As Figure 11-3 shows, the output compare value in the TIM channel registers determines the pulse width of the PWM signal. The time between overflow and output compare is the pulse width. Program the TIM to clear the channel pin on output compare if the state of the PWM pulse is logic one. Program the TIM to set the pin if the state of the PWM pulse is logic zero.

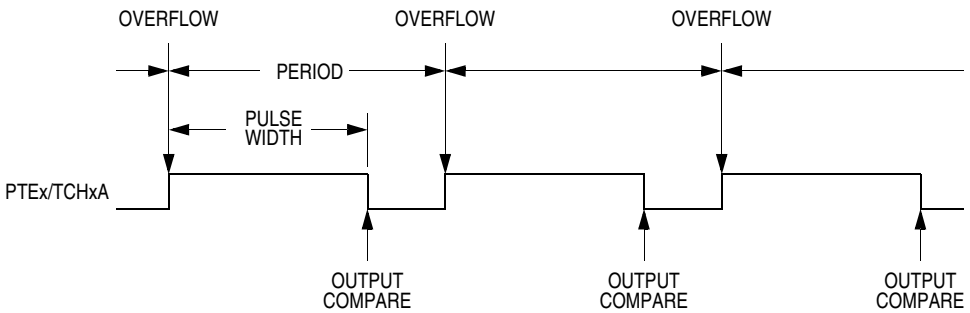

Figure 11-3. PWM Period and Pulse Width

The value in the TIM counter modulo registers and the selected prescaler output determines the frequency of the PWM output. The frequency of an 8-bit PWM signal is variable in 256 increments. Writing $00FF (255) to the TIM counter modulo registers produces a PWM period of 256 times the internal bus clock period if the prescaler select value is 000 (see 11.9.1 TIM Status and Control Register (TSC)).

The value in the TIM channel registers determines the pulse width of the PWM output. The pulse width of an 8-bit PWM signal is variable in 256 increments. Writing $0080 (128) to the TIM channel registers produces a duty cycle of 128/256 or 50%.

11.4.4.1 Unbuffered PWM Signal Generation

Any output compare channel can generate unbuffered PWM pulses as described in 11.4.4 Pulse Width Modulation (PWM). The pulses are unbuffered because changing the pulse width requires writing the new pulse width value over the old value currently in the TIM channel registers.

An unsynchronized write to the TIM channel registers to change a pulse width value could cause incorrect operation for up to two PWM periods. For example, writing a new value before the counter reaches the old value but after the counter reaches the new value prevents any compare during that PWM period. Also, using a TIM overflow interrupt routine to write a new, smaller pulse width value may cause the compare to be missed. The TIM may pass the new value before it is written.

Use the following methods to synchronize unbuffered changes in the PWM pulse width on channel x:

- When changing to a shorter pulse width, enable channel x output compare interrupts and write the new value in the output compare interrupt routine. The output compare interrupt occurs at the end of the current pulse. The interrupt routine has until the end of the PWM period to write the new value.
- When changing to a longer pulse width, enable TIM overflow interrupts and write the new value in the TIM overflow interrupt routine. The TIM overflow interrupt occurs at the end of the current PWM period. Writing a larger value in an output compare interrupt routine (at the end of the current pulse) could cause two output compares to occur in the same PWM period.

NOTE

In PWM signal generation, do not program the PWM channel to toggle on output compare. Toggling on output compare prevents reliable 0% duty cycle generation and removes the ability of the channel to self-correct in the event of software error or noise. Toggling on output compare also can cause incorrect PWM signal generation when changing the PWM pulse width to a new, much larger value.

11.4.4.2 Buffered PWM Signal Generation

Channels 0 and 1 can be linked to form a buffered PWM channel whose output appears on the PTE1/TCH0 pin. The TIM channel registers of the linked pair alternately control the pulse width of the output.

Setting the MS0B bit in TIM channel 0 status and control register (TSC0) links channel 0 and channel 1. The TIM channel 0 registers initially control the pulse width on the PTE1/TCH0 pin. Writing to the TIM channel 1 registers enables the TIM channel 1 registers to synchronously control the pulse width at the beginning of the next PWM period. At each subsequent overflow, the TIM channel registers (0 or 1) that control the pulse width are the ones written to last. TSC0 controls and monitors the buffered PWM function, and TIM channel 1 status and control register (TSC1) is unused. While the MS0B bit is set, the channel 1 pin, PTE2/TCH1, is available as a general-purpose I/O pin.

NOTE

In buffered PWM signal generation, do not write new pulse width values to the currently active channel registers. User software should track the currently active channel to prevent writing a new value to the active channel. Writing to the active channel registers is the same as generating unbuffered PWM signals.

11.4.4.3 PWM Initialization

To ensure correct operation when generating unbuffered or buffered PWM signals, use this initialization procedure:

1. In the TIM status and control register (TSC):
   a. Stop the TIM counter by setting the TIM stop bit, TSTOP.
   b. Reset the TIM counter and prescaler by setting the TIM reset bit, TRST.
2. In the TIM counter modulo registers (TMODH:TMODL), write the value for the required PWM period.
3. In the TIM channel x registers (TCHxH:TCHxL), write the value for the required pulse width.
4. In TIM channel x status and control register (TSCx):
   a. Write 0:1 (for unbuffered output compare or PWM signals) or 1:0 (for buffered output compare or PWM signals) to the mode select bits, MSxB:MSxA. (See Table 11-3.)
   b. Write 1 to the toggle-on-overflow bit, TOVx.
   c. Write 1:0 (to clear output on compare) or 1:1 (to set output on compare) to the edge/level select bits, ELSxB:ELSxA. The output action on compare must force the output to the complement of the pulse width level. (See Table 11-3.)

   NOTE

   In PWM signal generation, do not program the PWM channel to toggle on output compare. Toggling on output compare prevents reliable 0% duty cycle generation and removes the ability of the channel to self-correct in the event of software error or noise. Toggling on output compare can also cause incorrect PWM signal generation when changing the PWM pulse width to a new, much larger value.
5. In the TIM status control register (TSC), clear the TIM stop bit, TSTOP.

Setting MS0B links channels 0 and 1 and configures them for buffered PWM operation. The TIM channel 0 registers (TCH0H:TCH0L) initially control the buffered PWM output. TIM status control register 0 (TSCR0) controls and monitors the PWM signal from the linked channels. MS0B takes priority over MS0A.

Clearing the toggle-on-overflow bit, TOVx, inhibits output toggles on TIM overflows. Subsequent output compares try to force the output to a state it is already in and have no effect. The result is a 0% duty cycle output.

Setting the channel x maximum duty cycle bit (CHxMAX) and setting the TOVx bit generates a 100% duty cycle output. See 11.9.4 TIM Channel Status and Control Registers (TSC0:TSC1).

11.5 Interrupts

The following TIM sources can generate interrupt requests:

- TIM overflow flag (TOF) — The TOF bit is set when the TIM counter reaches the modulo value programmed in the TIM counter modulo registers. The TIM overflow interrupt enable bit, TOIE, enables TIM overflow CPU interrupt requests. TOF and TOIE are in the TIM status and control register.
- TIM channel flags (CH1F:CH0F) — The CHxF bit is set when an input capture or output compare occurs on channel x. Channel x TIM CPU interrupt requests are controlled by the channel x interrupt enable bit, CHxIE. Channel x TIM CPU interrupt requests are enabled when CHxIE=1. CHxF and CHxIE are in the TIM channel x status and control register.

11.6 Low-Power Modes

The WAIT and STOP instructions put the MCU in low power-consumption standby modes.

11.6.1 Wait Mode

The TIM remains active after the execution of a WAIT instruction. In wait mode the TIM registers are not accessible by the CPU. Any enabled CPU interrupt request from the TIM can bring the MCU out of wait mode.

If TIM functions are not required during wait mode, reduce power consumption by stopping the TIM before executing the WAIT instruction.

11.6.2 Stop Mode

The TIM is inactive after the execution of a STOP instruction. The STOP instruction does not affect register conditions or the state of the TIM counter. TIM operation resumes when the MCU exits stop mode after an external interrupt.

11.7 TIM During Break Interrupts

A break interrupt stops the TIM counter.

The system integration module (SIM) controls whether status bits in other modules can be cleared during the break state. The BCFE bit in the break flag control register (BFCR) enables software to clear status bits during the break state. (See 7.7.3 Break Flag Control Register (BFCR).)

To allow software to clear status bits during a break interrupt, write a logic one to the BCFE bit. If a status bit is cleared during the break state, it remains cleared when the MCU exits the break state.

To protect status bits during the break state, write a logic zero to the BCFE bit. With BCFE at logic zero (its default state), software can read and write I/O registers during the break state without affecting status bits. Some status bits have a two-step read/write clearing procedure. If software does the first step on such a bit before the break, the bit cannot change during the break state as long as BCFE is at logic zero. After the break, doing the second step clears the status bit.

11.8 I/O Signals

Port E shares three of its pins with the TIM. PTE0/TCLK is and external clock input to the TIM prescaler. The two TIM channel I/O pins are PTE1/TCH0 and PTE2/TCH1.

11.8.1 TIM Clock Pin (PTE0/TCLK)

PTE0/TCLK is an external clock input that can be the clock source for the TIM counter instead of the prescaled internal bus clock. Select the PTE0/TCLK input by writing logic ones to the three prescaler select bits, PS[2:0]. (See 11.9.1 TIM Status and Control Register (TSC).) The minimum TCLK pulse width, $TCLK_{LMIN}$ or $TCLK_{HMIN}$, is:

$$\frac{1}{\text{bus frequency}} + t_{SU}$$

The maximum TCLK frequency is:
bus frequency ÷ 2

PTE0/TCLK is available as a general-purpose I/O pin when not used as the TIM clock input. When the PTE0/TCLK pin is the TIM clock input, it is an input regardless of the state of the DDRE0 bit in data direction register E.

11.8.2 TIM Channel I/O Pins (PTE1/TCH0:PTE2/TCH1)

Each channel I/O pin is programmable independently as an input capture pin or an output compare pin. PTE1/TCH0 can be configured as buffered output compare or buffered PWM pins.

11.9 I/O Registers

The following I/O registers control and monitor operation of the TIM:

- TIM status and control register (TSC)
- TIM counter registers (TCNTH:TCNTL)
- TIM counter modulo registers (TMODH:TMODL)
- TIM channel status and control registers (TSC0 and TSC1)
- TIM channel registers (TCH0H:TCH0L and TCH1H:TCH1L)

11.9.1 TIM Status and Control Register (TSC)

The TIM status and control register does the following:

- Enables TIM overflow interrupts
- Flags TIM overflows
- Stops the TIM counter
- Resets the TIM counter
- Prescales the TIM counter clock

Address: $0010

	Bit 7	6	5	4	3	2	1	Bit 0
Read:	TOF	TOIE	TSTOP	0	0	PS2	PS1	PS0
Write:	0			TRST				
Reset:	0	0	1	0	0	0	0	0

= Unimplemented

Figure 11-4. TIM Status and Control Register (TSC)

TOF — TIM Overflow Flag Bit

This read/write flag is set when the TIM counter reaches the modulo value programmed in the TIM counter modulo registers. Clear TOF by reading the TIM status and control register when TOF is set and then writing a logic zero to TOF. If another TIM overflow occurs before the clearing sequence is complete, then writing logic zero to TOF has no effect. Therefore, a TOF interrupt request cannot be lost due to inadvertent clearing of TOF. Reset clears the TOF bit. Writing a logic one to TOF has no effect.

1 = TIM counter has reached modulo value
0 = TIM counter has not reached modulo value

TOIE — TIM Overflow Interrupt Enable Bit

This read/write bit enables TIM overflow interrupts when the TOF bit becomes set. Reset clears the TOIE bit.

1 = TIM overflow interrupts enabled
0 = TIM overflow interrupts disabled

TSTOP — TIM Stop Bit

This read/write bit stops the TIM counter. Counting resumes when TSTOP is cleared. Reset sets the TSTOP bit, stopping the TIM counter until software clears the TSTOP bit.

1 = TIM counter stopped
0 = TIM counter active

NOTE

Do not set the TSTOP bit before entering wait mode if the TIM is required to exit wait mode.

TRST — TIM Reset Bit

Setting this write-only bit resets the TIM counter and the TIM prescaler. Setting TRST has no effect on any other registers. Counting resumes from $0000. TRST is cleared automatically after the TIM counter is reset and always reads as logic zero. Reset clears the TRST bit.

1 = Prescaler and TIM counter cleared
0 = No effect

NOTE

Setting the TSTOP and TRST bits simultaneously stops the TIM counter at a value of $0000.

PS[2:0] — Prescaler Select Bits

These read/write bits select either the PTE0/TCLK pin or one of the seven prescaler outputs as the input to the TIM counter as Table 11-2 shows. Reset clears the PS[2:0] bits.

Table 11-2. Prescaler Selection

PS2	PS1	PS0	TIM Clock Source
0	0	0	Internal Bus Clock ÷ 1
0	0	1	Internal Bus Clock ÷ 2
0	1	0	Internal Bus Clock ÷ 4
0	1	1	Internal Bus Clock ÷ 8
1	0	0	Internal Bus Clock ÷ 16
1	0	1	Internal Bus Clock ÷ 32
1	1	0	Internal Bus Clock ÷ 64
1	1	1	PTE0/TCLK

11.9.2 TIM Counter Registers (TCNTH:TCNTL)

The two read-only TIM counter registers contain the high and low bytes of the value in the TIM counter. Reading the high byte (TCNTH) latches the contents of the low byte (TCNTL) into a buffer. Subsequent reads of TCNTH do not affect the latched TCNTL value until TCNTL is read. Reset clears the TIM counter registers. Setting the TIM reset bit (TRST) also clears the TIM counter registers.

NOTE

If you read TCNTH during a break interrupt, be sure to unlatch TCNTL by reading TCNTL before exiting the break interrupt. Otherwise, TCNTL retains the value latched during the break.

Address: $0012 TCNTH

	Bit 7	6	5	4	3	2	1	Bit 0
Read:	Bit15	Bit14	Bit13	Bit12	Bit11	Bit10	Bit9	Bit8
Write:								
Reset:	0	0	0	0	0	0	0	0

Address: $0013 TCNTL

	Bit 7	6	5	4	3	2	1	Bit 0
Read:	Bit7	Bit6	Bit5	Bit4	Bit3	Bit2	Bit1	Bit0
Write:								
Reset:	0	0	0	0	0	0	0	0

= Unimplemented

Figure 11-5. TIM Counter Registers (TCNTH:TCNTL)

11.9.3 TIM Counter Modulo Registers (TMODH:TMODL)

The read/write TIM modulo registers contain the modulo value for the TIM counter. When the TIM counter reaches the modulo value, the overflow flag (TOF) becomes set, and the TIM counter resumes counting from $0000 at the next timer clock. Writing to the high byte (TMODH) inhibits the TOF bit and overflow interrupts until the low byte (TMODL) is written. Reset sets the TIM counter modulo registers.

Address: $0014 TMODH

	Bit 7	6	5	4	3	2	1	Bit 0
Read: Write:	Bit15	Bit14	Bit13	Bit12	Bit11	Bit10	Bit9	Bit8
Reset:	1	1	1	1	1	1	1	1

Address: $0015 TMODL

	Bit 7	6	5	4	3	2	1	Bit 0
Read: Write:	Bit7	Bit6	Bit5	Bit4	Bit3	Bit2	Bit1	Bit0
Reset:	1	1	1	1	1	1	1	1

Figure 11-6. TIM Counter Modulo Registers (TMODH:TMODL)

NOTE

Reset the TIM counter before writing to the TIM counter modulo registers.

11.9.4 TIM Channel Status and Control Registers (TSC0:TSC1)

Each of the TIM channel status and control registers does the following:

- Flags input captures and output compares
- Enables input capture and output compare interrupts
- Selects input capture, output compare, or PWM operation
- Selects high, low, or toggling output on output compare
- Selects rising edge, falling edge, or any edge as the active input capture trigger
- Selects output toggling on TIM overflow
- Selects 0% and 100% PWM duty cycle
- Selects buffered or unbuffered output compare/PWM operation

Address: $0016 TSC0

	Bit 7	6	5	4	3	2	1	Bit 0
Read:	CH0F	CH0IE	MS0B	MS0A	ELS0B	ELS0A	TOV0	CH0MAX
Write:	0							
Reset:	0	0	0	0	0	0	0	0

Address: $0019 TSC1

	Bit 7	6	5	4	3	2	1	Bit 0
Read:	CH1F	CH1IE	0	MS1A	ELS1B	ELS1A	TOV1	CH1MAX
Write:	0							
Reset:	0	0	0	0	0	0	0	0

= Unimplemented

Figure 11-7. TIM Channel Status and Control Registers (TSC0:TSC1)

CHxF — Channel x Flag Bit

When channel x is an input capture channel, this read/write bit is set when an active edge occurs on the channel x pin. When channel x is an output compare channel, CHxF is set when the value in the TIM counter registers matches the value in the TIM channel x registers.

When TIM CPU interrupt requests are enabled (CHxIE=1), clear CHxF by reading the TIM channel x status and control register with CHxF set and then writing a logic zero to CHxF. If another interrupt request occurs before the clearing sequence is complete, then writing logic zero to CHxF has no effect. Therefore, an interrupt request cannot be lost due to inadvertent clearing of CHxF.

Reset clears the CHxF bit. Writing a logic one to CHxF has no effect.

1 = Input capture or output compare on channel x
0 = No input capture or output compare on channel x

CHxIE — Channel x Interrupt Enable Bit

This read/write bit enables TIM CPU interrupt service requests on channel x. Reset clears the CHxIE bit.

1 = Channel x CPU interrupt requests enabled
0 = Channel x CPU interrupt requests disabled

MSxB — Mode Select Bit B

This read/write bit selects buffered output compare/PWM operation. MSxB exists only in the TIM channel 0 status and control register.

Setting MS0B disables the channel 1 status and control register and reverts TCH1 to general-purpose I/O. Reset clears the MSxB bit.

1 = Buffered output compare/PWM operation enabled
0 = Buffered output compare/PWM operation disabled

MSxA — Mode Select Bit A

When ELSxB:ELSxA ≠ 0:0, this read/write bit selects either input capture operation or unbuffered output compare/PWM operation. (See Table 11-3.)

1 = Unbuffered output compare/PWM operation
0 = Input capture operation

When ELSxB:ELSxA = 0:0, this read/write bit selects the initial output level of the TCHx pin. (See Table 11-3.) Reset clears the MSxA bit.

1 = Initial output level low
0 = Initial output level high

NOTE

Before changing a channel function by writing to the MSxB or MSxA bit, set the TSTOP and TRST bits in the TIM status and control register (TSC).

ELSxB and ELSxA — Edge/Level Select Bits

When channel x is an input capture channel, these read/write bits control the active edge-sensing logic on channel x.

When channel x is an output compare channel, ELSxB and ELSxA control the channel x output behavior when an output compare occurs.

When ELSxB and ELSxA are both clear, channel x is not connected to port E, and pin PTEx/TCHx is available as a general-purpose I/O pin. Table 11-3 shows how ELSxB and ELSxA work. Reset clears the ELSxB and ELSxA bits.

Table 11-3. Mode, Edge, and Level Selection

MSxB	MSxA	ELSxB	ELSxA	Mode	Configuration
X	0	0	0	Output Preset	Pin under Port Control; Initial Output Level High
X	1	0	0		Pin under Port Control; Initial Output Level Low
0	0	0	1	Input Capture	Capture on Rising Edge Only
0	0	1	0		Capture on Falling Edge Only
0	0	1	1		Capture on Rising or Falling Edge
0	1	0	1	Output Compare or PWM	Toggle Output on Compare
0	1	1	0		Clear Output on Compare
0	1	1	1		Set Output on Compare
1	X	0	1	Buffered Output Compare or Buffered PWM	Toggle Output on Compare
1	X	1	0		Clear Output on Compare
1	X	1	1		Set Output on Compare

NOTE

Before enabling a TIM channel register for input capture operation, make sure that the PTEx/TCHx pin is stable for at least two bus clocks.

TOVx — Toggle-On-Overflow Bit

When channel x is an output compare channel, this read/write bit controls the behavior of the channel x output when the TIM counter overflows. When channel x is an input capture channel, TOVx has no effect. Reset clears the TOVx bit.

1 = Channel x pin toggles on TIM counter overflow
0 = Channel x pin does not toggle on TIM counter overflow

NOTE

When TOVx is set, a TIM counter overflow takes precedence over a channel x output compare if both occur at the same time.

CHxMAX — Channel x Maximum Duty Cycle Bit

When the TOVx bit is at logic one, setting the CHxMAX bit forces the duty cycle of buffered and unbuffered PWM signals to 100%. As Figure 11-8 shows, the CHxMAX bit takes effect in the cycle after it is set or cleared. The output stays at the 100% duty cycle level until the cycle after CHxMAX is cleared.

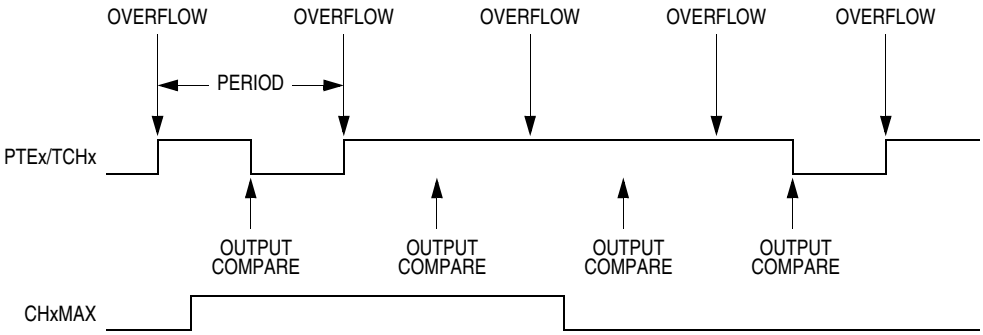

Figure 11-8. CHxMAX Latency

11.9.5 TIM Channel Registers (TCH0H/L–TCH1H/L)

These read/write registers contain the captured TIM counter value of the input capture function or the output compare value of the output compare function. The state of the TIM channel registers after reset is unknown.

In input capture mode (MSxB:MSxA = 0:0), reading the high byte of the TIM channel x registers (TCHxH) inhibits input captures until the low byte (TCHxL) is read.

In output compare mode (MSxB:MSxA ≠ 0:0), writing to the high byte of the TIM channel x registers (TCHxH) inhibits output compares until the low byte (TCHxL) is written.

Address: $0017 TCH0H

	Bit 7	6	5	4	3	2	1	Bit 0
Read: Write:	Bit15	Bit14	Bit13	Bit12	Bit11	Bit10	Bit9	Bit8
Reset:	Indeterminate after reset							

Address: $0018 TCH0L

	Bit 7	6	5	4	3	2	1	Bit 0
Read: Write:	Bit7	Bit6	Bit5	Bit4	Bit3	Bit2	Bit1	Bit0
Reset:	Indeterminate after reset							

Address: $001A TCH1H

	Bit 7	6	5	4	3	2	1	Bit 0
Read: Write:	Bit15	Bit14	Bit13	Bit12	Bit11	Bit10	Bit9	Bit8
Reset:	Indeterminate after reset							

Address: $001B TCH1L

	Bit 7	6	5	4	3	2	1	Bit 0
Read: Write:	Bit7	Bit6	Bit5	Bit4	Bit3	Bit2	Bit1	Bit0
Reset:	Indeterminate after reset							

Figure 11-9. TIM Channel Registers (TCH0H/L:TCH1H/L)

Chapter 12
Input/Output (I/O) Ports

12.1 Introduction

Forty-two bidirectional input-output (I/O) pins form five parallel ports. All I/O pins are programmable as inputs or outputs.

NOTE

Connect any unused I/O pins to an appropriate logic level, either V_{DD} or V_{SS}. Although the I/O ports do not require termination for proper operation, termination reduces excess current consumption and the possibility of electrostatic damage.

Addr.	Register Name		Bit 7	6	5	4	3	2	1	Bit 0
$0000	Port A Data Register (PTA)	Read: Write:	PTA7	PTA6	PTA5	PTA4	PTA3	PTA2	PTA1	PTA0
		Reset:	Unaffected by reset							
$0001	Port B Data Register (PTB)	Read: Write:	PTB7	PTB6	PTB5	PTB4	PTB3	PTB2	PTB1	PTB0
		Reset:	Unaffected by reset							
$0002	Port C Data Register (PTC)	Read:	0	0	0	PTC4	PTC3	PTC2	PTC1	PTC0
		Write:								
		Reset:	Unaffected by reset							
$0003	Port D Data Register (PTD)	Read: Write:	PTD7	PTD6	PTD5	PTD4	PTD3	PTD2	PTD1	PTD0
		Reset:	Unaffected by reset							
$0004	Data Direction Register A (DDRA)	Read: Write:	DDRA7	DDRA6	DDRA5	DDRA4	DDRA3	DDRA2	DDRA1	DDRA0
		Reset:	0	0	0	0	0	0	0	0
$0005	Data Direction Register B (DDRB)	Read: Write:	DDRB7	DDRB6	DDRB5	DDRB4	DDRB3	DDRB2	DDRB1	DDRB0
		Reset:	0	0	0	0	0	0	0	0
$0006	Data Direction Register C (DDRC)	Read:	0	0	0	DDRC4	DDRC3	DDRC2	DDRC1	DDRC0
		Write:								
		Reset:	0	0	0	0	0	0	0	0
$0007	Data Direction Register D (DDRD)	Read: Write:	DDRD7	DDRD6	DDRD5	DDRD4	DDRD3	DDRD2	DDRD1	DDRD0
		Reset:	0	0	0	0	0	0	0	0

= Unimplemented

Addr.	Register Name		Bit 7	6	5	4	3	2	1	Bit 0
$0008	Port E Data Register (PTE)	Read:	0	0	0	PTE4	PTE3	PTE2	PTE1	PTE0
		Write:								
		Reset:	Unaffected by reset							
$0009	Port F Data Register (PTF)	Read: Write:	PTF7	PTF6	PTF5	PTF4	PTF3	PTF2	PTF1	PTF0
		Reset:	Unaffected by reset							
$000A	Data Direction Register E (DDRE)	Read:	0	0	0	DDRE4	DDRE3	DDRE2	DDRE1	DDRE0
		Write:								
		Reset:	0	0	0	0	0	0	0	0
$000B	Data Direction Register F (DDRF)	Read: Write:	DDRF7	DDRF6	DDRF5	DDRF4	DDRF3	DDRF2	DDRF1	DDRF0
		Reset:	0	0	0	0	0	0	0	0
$001C	Port E Optical Interface Enable Register (EOIER)	Read: Write:	YREF2	YREF1	YREF0	XREF2	XREF1	XREF0	OIEY	OIEX
		Reset:	0	1	0	0	1	0	0	0
$001D	Port Option Control Register (POC)	Read:	0	0	LDD	0	0	PCP	PBP	PAP
		Write:								
		Reset:	0	0	1	0	0	0	0	0

= Unimplemented

12.2 Port A

Port A is an 8-bit general-purpose bidirectional I/O port with software configurable pullups.

12.2.1 Port A Data Register (PTA)

The port A data register contains a data latch for each of the eight port A pins.

Address: $0000

	Bit 7	6	5	4	3	2	1	Bit 0
Read: Write:	PTA7	PTA6	PTA5	PTA4	PTA3	PTA2	PTA1	PTA0
Reset:	Unaffected by reset							

Figure 12-1. Port A Data Register (PTA)

PTA[7:0] — Port A Data Bits

These read/write bits are software programmable. Data direction of each port A pin is under the control of the corresponding bit in data direction register A. Reset has no effect on port A data.

The port A pullup enable bit, PAP, in the port option control register (POC) enables pullups on port A pins if the respective pin is configured as an input. (See 12.8 Port Options.)

12.2.2 Data Direction Register A (DDRA)

Data direction register A determines whether each port A pin is an input or an output. Writing a logic one to a DDRA bit enables the output buffer for the corresponding port A pin; a logic zero disables the output buffer.

Address: $0004

	Bit 7	6	5	4	3	2	1	Bit 0
Read: Write:	DDRA7	DDRA6	DDRA5	DDRA4	DDRA3	DDRA2	DDRA1	DDRA0
Reset:	0	0	0	0	0	0	0	0

Figure 12-2. Data Direction Register A (DDRA)

DDRA[7:0] — Data Direction Register A Bits

These read/write bits control port A data direction. Reset clears DDRA[7:0], configuring all port A pins as inputs.

1 = Corresponding port A pin configured as output
0 = Corresponding port A pin configured as input

NOTE

Avoid glitches on port A pins by writing to the port A data register before changing data direction register A bits from 0 to 1.

Figure 12-3 shows the port A I/O logic.

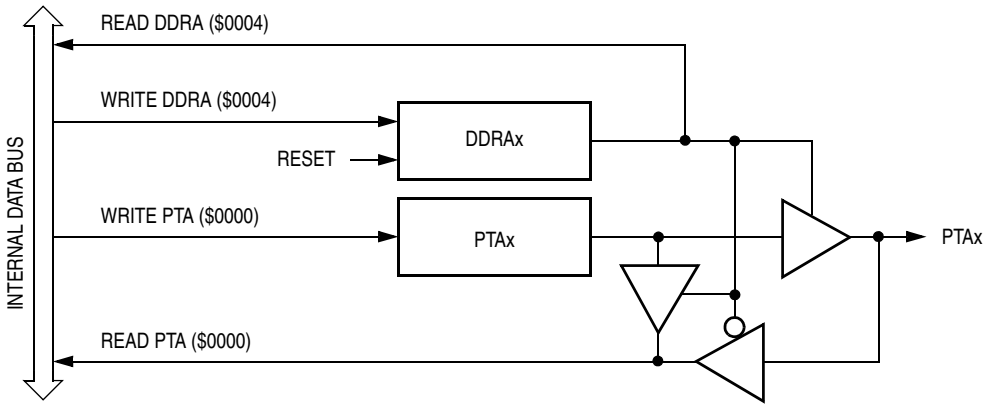

Figure 12-3. Port A I/O Circuit

When bit DDRAx is a logic one, reading address $0000 reads the PTAx data latch. When bit DDRAx is a logic zero, reading address $0000 reads the voltage level on the pin. The data latch can always be written, regardless of the state of its data direction bit. Table 12-1 summarizes the operation of the port A pins.

Table 12-1. Port A Pin Functions

DDRA Bit	PTA Bit	I/O Pin Mode	Accesses to DDRA	Accesses to PTA	
			Read/Write	Read	Write
0	X(1)	Input, Hi-Z(2)	DDRA[7:0]	Pin	PTA[7:0](3)
1	X	Output	DDRA[7:0]	PTA[7:0]	PTA[7:0]

1. X = don't care
2. Hi-Z = high impedance
3. Writing affects data register, but does not affect input.

12.3 Port B

Port B is an 8-bit general-purpose bidirectional I/O port with software configurable pullups.

12.3.1 Port B Data Register (PTB)

The port B data register contains a data latch for each of the eight port B pins.

Address: $0001

	Bit 7	6	5	4	3	2	1	Bit 0
Read: Write:	PTB7	PTB6	PTB5	PTB4	PTB3	PTB2	PTB1	PTB0
Reset:	Unaffected by reset							

Figure 12-4. Port B Data Register (PTB)

PTB[7:0] — Port B Data Bits

These read/write bits are software-programmable. Data direction of each port B pin is under the control of the corresponding bit in data direction register B. Reset has no effect on port B data.

The port B pullup enable bit, PBP, in the port option control register (POC) enables pullups on port B pins if the respective pin is configured as an input. (See 12.8 Port Options.).

12.3.2 Data Direction Register B (DDRB)

Data direction register B determines whether each port B pin is an input or an output. Writing a logic one to a DDRB bit enables the output buffer for the corresponding port B pin; a logic zero disables the output buffer.

Address: $0005

	Bit 7	6	5	4	3	2	1	Bit 0
Read: Write:	DDRB7	DDRB6	DDRB5	DDRB4	DDRB3	DDRB2	DDRB1	DDRB0
Reset:	0	0	0	0	0	0	0	0

Figure 12-5. Data Direction Register B (DDRB)

DDRB[7:0] — Data Direction Register B Bits

These read/write bits control port B data direction. Reset clears DDRB[7:0], configuring all port B pins as inputs.

1 = Corresponding port B pin configured as output
0 = Corresponding port B pin configured as input

NOTE

Avoid glitches on port B pins by writing to the port B data register before changing data direction register B bits from 0 to 1.

Figure 12-6 shows the port B I/O logic.

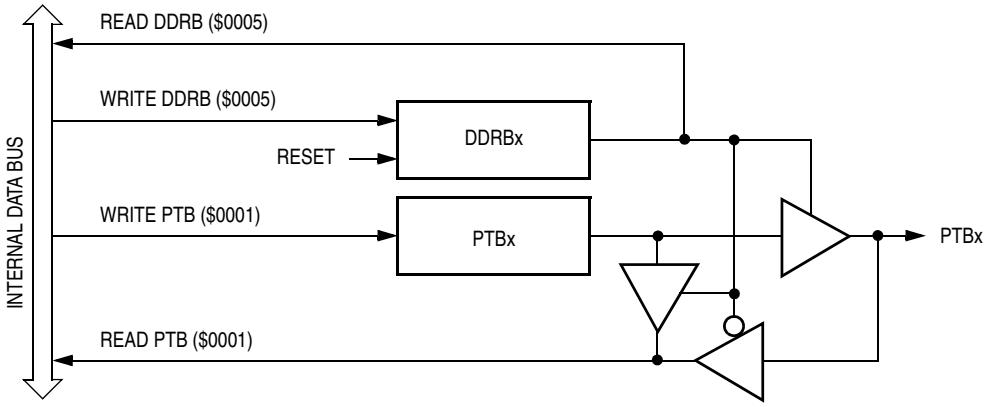

Figure 12-6. Port B I/O Circuit

When bit DDRBx is a logic one, reading address $0001 reads the PTBx data latch. When bit DDRBx is a logic zero, reading address $0001 reads the voltage level on the pin. The data latch can always be written, regardless of the state of its data direction bit. Table 12-2 summarizes the operation of the port B pins.

Table 12-2. Port B Pin Functions

DDRB Bit	PTB Bit	I/O Pin Mode	Accesses to DDRB	Accesses to PTB	
			Read/Write	Read	Write
0	X(1)	Input, Hi-Z(2)	DDRB[7:0]	Pin	PTB[7:0](3)
1	X	Output	DDRB[7:0]	PTB[7:0]	PTB[7:0]

1. X = don't care
2. Hi-Z = high impedance
3. Writing affects data register, but does not affect input.

12.4 Port C

Port C is a 5-bit general-purpose bidirectional I/O port with software configurable pullups and current drive options.

12.4.1 Port C Data Register (PTC)

The port C data register contains a data latch for each of the five port C pins.

Address: $0002

	Bit 7	6	5	4	3	2	1	Bit 0
Read:	0	0	0	PTC4	PTC3	PTC2	PTC1	PTC0
Write:								
Reset:	Unaffected by reset							

= Unimplemented

Figure 12-7. Port C Data Register (PTC)

PTC[4:0] — Port C Data Bits

These read/write bits are software-programmable. Data direction of each port C pin is under the control of the corresponding bit in data direction register C. Reset has no effect on port C data.

The port C pullup enable bit, PCP, in the port option control register (POC) enables pullups on port C pins if the respective pin is configured as an input. (See 12.8 Port Options.)

The LED direct drive bit, LDD, in the port option control register (POC) controls the drive options for Port C.

12.4.2 Data Direction Register C (DDRC)

Data direction register C determines whether each port C pin is an input or an output. Writing a logic one to a DDRC bit enables the output buffer for the corresponding port C pin; a logic zero disables the output buffer.

Address: $0006

	Bit 7	6	5	4	3	2	1	Bit 0
Read:	0	0	0	DDRC4	DDRC3	DDRC2	DDRC1	DDRC0
Write:								
Reset:	0	0	0	0	0	0	0	0

= Unimplemented

Figure 12-8. Data Direction Register C (DDRC)

DDRC[4:0] — Data Direction Register C Bits

These read/write bits control port C data direction. Reset clears DDRC[4:0], configuring all port C pins as inputs.

1 = Corresponding port C pin configured as output
0 = Corresponding port C pin configured as input

NOTE

Avoid glitches on port C pins by writing to the port C data register before changing data direction register C bits from 0 to 1.

Figure 12-9 shows the port C I/O logic.

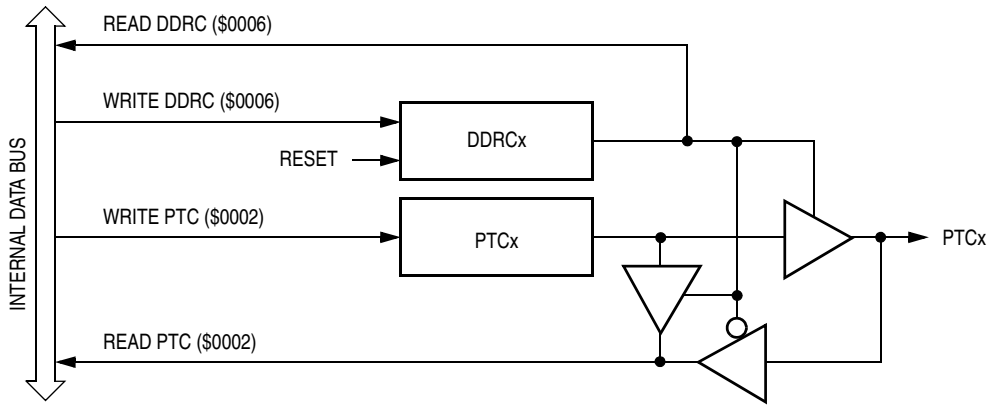

Figure 12-9. Port C I/O Circuit

When bit DDRCx is a logic one, reading address $0002 reads the PTCx data latch. When bit DDRCx is a logic zero, reading address $0002 reads the voltage level on the pin. The data latch can always be written, regardless of the state of its data direction bit. Table 12-3 summarizes the operation of the port C pins.

Table 12-3. Port C Pin Functions

DDRC Bit	PTC Bit	I/O Pin Mode	Accesses to DDRC	Accesses to PTC	
			Read/Write	Read	Write
0	X(1)	Input, Hi-Z(2)	DDRC[4:0]	Pin	PTC[4:0](3)
1	X	Output	DDRC[4:0]	PTC[4:0]	PTC[4:0]

1. X = don't care
2. Hi-Z = high impedance
3. Writing affects data register, but does not affect input.

12.5 Port D

Port D is an 8-bit general-purpose bidirectional I/O port that shares its pins with the keyboard interrupt module (KBI). All Port D pins have built-in schmitt triggered input.

12.5.1 Port D Data Register (PTD)

The port D data register contains a data latch for each of the eight port D pins.

Address: $0003

	Bit 7	6	5	4	3	2	1	Bit 0
Read: Write:	PTD7	PTD6	PTD5	PTD4	PTD3	PTD2	PTD1	PTD0
Reset:	Unaffected by reset							
Alternate Function:	KBD7	KBD6	KBD5	KBD4	KBD3	KBD2	KBD1	KBD0

Figure 12-10. Port D Data Register (PTD)

PTD[7:0] — Port D Data Bits

These read/write bits are software programmable. Data direction of each port D pin is under control of the corresponding bit in data direction register D. Reset has no effect on port D data.

The port D pullups are automatically enabled if the respective pin is configured as a keyboard interrupt. (See 15.3.1 Port-D Keyboard Interrupt Functional Description.)

The port-D keyboard interrupt enable bits, KBDIE7—KBDIE0, in the port-D keyboard interrupt enable register (KBDIER), enable the port D pins as external interrupt pins. See Chapter 15 Keyboard Interrupt Module (KBI).

12.5.2 Data Direction Register D (DDRD)

Data direction register D determines whether each port D pin is an input or an output. Writing a logic one to a DDRD bit enables the output buffer for the corresponding port D pin; a logic zero disables the output buffer.

Address: $0007

	Bit 7	6	5	4	3	2	1	Bit 0
Read: Write:	DDRD7	DDRD6	DDRD5	DDRD4	DDRD3	DDRD2	DDRD1	DDRD0
Reset:	0	0	0	0	0	0	0	0

Figure 12-11. Data Direction Register D (DDRD)

DDRD[7:0] — Data Direction Register D Bits

These read/write bits control port D data direction. Reset clears DDRD[7:0], configuring all port D pins as inputs.

1 = Corresponding port D pin configured as output
0 = Corresponding port D pin configured as input

NOTE

Avoid glitches on port D pins by writing to the port D data register before changing data direction register D bits from 0 to 1.

Figure 12-12 shows the port D I/O logic.

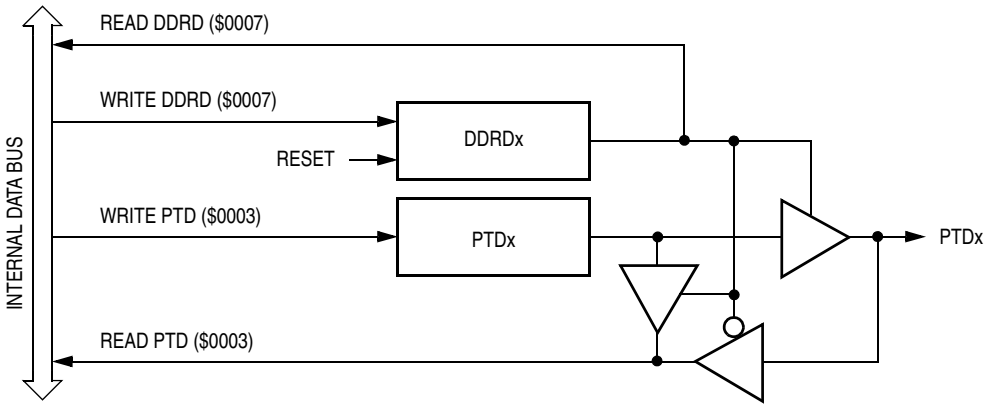

Figure 12-12. Port D I/O Circuit

When bit DDRDx is a logic one, reading address $0003 reads the PTDx data latch. When bit DDRDx is a logic zero, reading address $0003 reads the voltage level on the pin. The data latch can always be written, regardless of the state of its data direction bit. Table 12-4 summarizes the operation of the port D pins.

Table 12-4. Port D Pin Functions

DDRD Bit	PTD Bit	I/O Pin Mode	Accesses to DDRD	Accesses to PTD	
			Read/Write	Read	Write
0	X(1)	Input, Hi-Z(2)	DDRD[7:0]	Pin	PTD[7:0](3)
1	X	Output	DDRD[7:0]	PTD[7:0]	PTD[7:0]

1. X = don't care
2. Hi-Z = high impedance
3. Writing affects data register, but does not affect input.

12.6 Port E

Port E is a 5-bit special function port that shares four of its pins with the keyboard interrupt module (KBI) and shares three of its pins with the timer interface module (TIM). PTE3–PTE0 pins have built-in schmitt triggered input and software configurable pull-up; In addition, PTE3–PTE0 pins have built-in optical interface circuit which can be enabled via the Port-E Optical Interface Enable Register.

12.6.1 Port E Data Register (PTE)

The port E data register contains a data latch for each of the five port E pins.

Address: **$0008**

	Bit 7	6	5	4	3	2	1	Bit 0
Read:	0	0	0	PTE4	PTE3	PTE2	PTE1	PTE0
Write:								
Reset:	Unaffected by reset							
Alternate Function:					KBE3	KBE2	KBE1	KBE0
Alternate Function:						TCH1	TCH0	TCLK

= Unimplemented

Figure 12-13. Port E Data Register (PTE)

PTE[4:0] — Port E Data Bits

PTE[4:0] are read/write, software-programmable bits. Data direction of each port E pin is under the control of the corresponding bit in data direction register E.

TCH1-TCH0 — Timer Channel I/O Bits

The PTE2/TCH1-PTE1/TCH0 pins are the TIM input capture/output compare pins. The edge/level select bits, ELSxB and ELSxA, determine whether the PTE2/TCH1–PTE1/TCH0 pins are timer channel I/O pins or general-purpose I/O pins. See Chapter 11 Timer Interface Module (TIM).

NOTE

Data direction register E (DDRE) does not affect the data direction of port E pins that are being used by the TIM. However, the DDRE bits always determine whether reading port E returns the states of the latches or the states of the pins.

TCLK — Timer Clock Input

The PTE0/TCLK pin is the external clock input for the TIM. The prescaler select bits, PS2-PS0, selects PE0/TCLK as the TIM clock input. When not selected as the TIM clock, PE0/TCLK is available for general purpose I/O. See Chapter 11 Timer Interface Module (TIM).

The PEPE[3:0] bits in the port E keyboard interrupt enable register enable individual pull-ups on port E pins PTE3–PTE0 if the respective pin is configured as an input. (See 15.4.3.2 Port-E Keyboard Interrupt Enable Register.)

The port-E keyboard interrupt enable bits, KBEIE3—KBEIE0, in the port-E keyboard interrupt enable register (KBEIER), enable the port E pins as external interrupt pins. See Chapter 15 Keyboard Interrupt Module (KBI).

12.6.2 Data Direction Register E (DDRE)

Data direction register E determines whether each port E pin is an input or an output. Writing a logic one to a DDRE bit enables the output buffer for the corresponding port E pin; a logic zero disables the output buffer.

Address: $000A

	Bit 7	6	5	4	3	2	1	Bit 0
Read:	0	0	0	DDRE4	DDRE3	DDRE2	DDRE1	DDRE0
Write:								
Reset:	0	0	0	0	0	0	0	0

= Unimplemented

Figure 12-14. Data Direction Register E (DDRE)

DDRE[4:0] — Data Direction Register E Bits

These read/write bits control port E data direction. Reset clears DDRE[4:0], configuring all port E pins as inputs.

1 = Corresponding port E pin configured as output
0 = Corresponding port E pin configured as input

NOTE

Avoid glitches on port E pins by writing to the port E data register before changing data direction register E bits from 0 to 1.

Figure 12-15 shows the port E I/O logic.

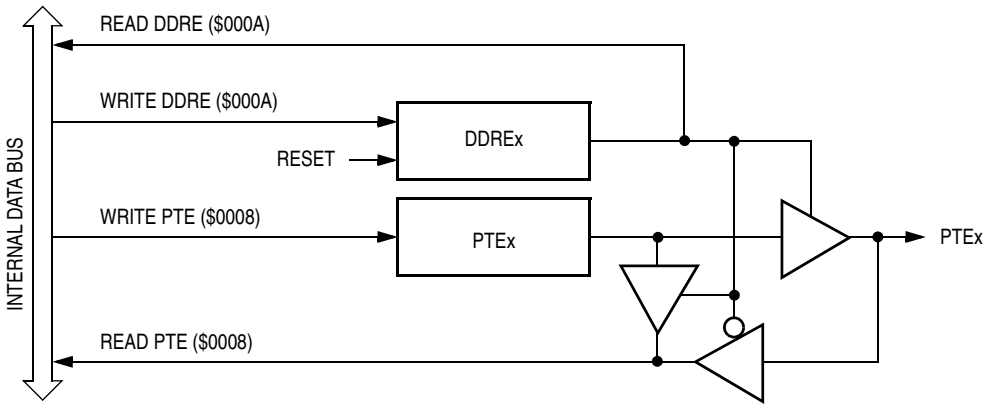

Figure 12-15. Port E I/O Circuit

When bit DDREx is a logic one, reading address $0008 reads the PTEx data latch. When bit DDREx is a logic zero, reading address $0008 reads the voltage level on the pin. The data latch can always be written, regardless of the state of its data direction bit. Table 12-3 summarizes the operation of the port E pins.

Table 12-5. Port E Pin Functions

DDRE Bit	PTE Bit	I/O Pin Mode	Accesses to DDRE	Accesses to PTE	
			Read/Write	Read	Write
0	X(1)	Input, Hi-Z(2)	DDRE[4:0]	Pin	PTE[4:0](3)
1	X	Output	DDRE[4:0]	PTE[4:0]	PTE[4:0]

1. X = don't care
2. Hi-Z = high impedance
3. Writing affects data register, but does not affect input.

12.6.3 Port-E Optical Interface Enable Register

Port E pins PTE3–PTE0, each has an optical coupling interface circuit which is specially built for optical mouse application. Bits [1:0] of the Optical Interface Enable register enable or disable the interface circuit in each port E pins PTE3–PTE0, whilst bits [7:2] define the reference level for the optical interface circuit for optimum performance.

Address: $001C

	Bit 7	6	5	4	3	2	1	Bit 0
Read: Write:	YREF2	YREF1	YREF0	XREF2	XREF1	XREF0	OIEY	OIEX
Reset:	0	1	0	0	1	0	0	0

Figure 12-16. Optical Interface Enable Register E (EOIER)

OIEX — Optical Interface Enable X.

This enables optical interface on PTE0 and PTE1 pins. It also enables the voltage divider circuit.

1 = PTE0 and PTE1 optical interface enabled.
0 = PTE0 and PTE1 optical interface disabled.

OIEY — Optical Interface Enable Y.

This enables optical interface on PTE2 and PTE3 pins. It also enables the voltage divider circuit.

1 = PTE2 and PTE3 optical interface enabled.
0 = PTE2 and PTE3 optical interface disabled.

XREF2–XREF0 — Reference Voltage Selection X

These bits sets the slicing reference voltage for optical interface associated with PTE0 and PTE1.

YREF2–YREF0 — Reference Voltage Selection Y

These bits sets the slicing reference voltage for optical interface associated with PTE2 and PTE3.

XREF[2:0] / YREF[2:0]	PTE0-PTE1 / PTE2-PTE3 Reference Voltage (mV)
0	200
1	300
2	400
3	500
4	600
5	700
6	800
7	900

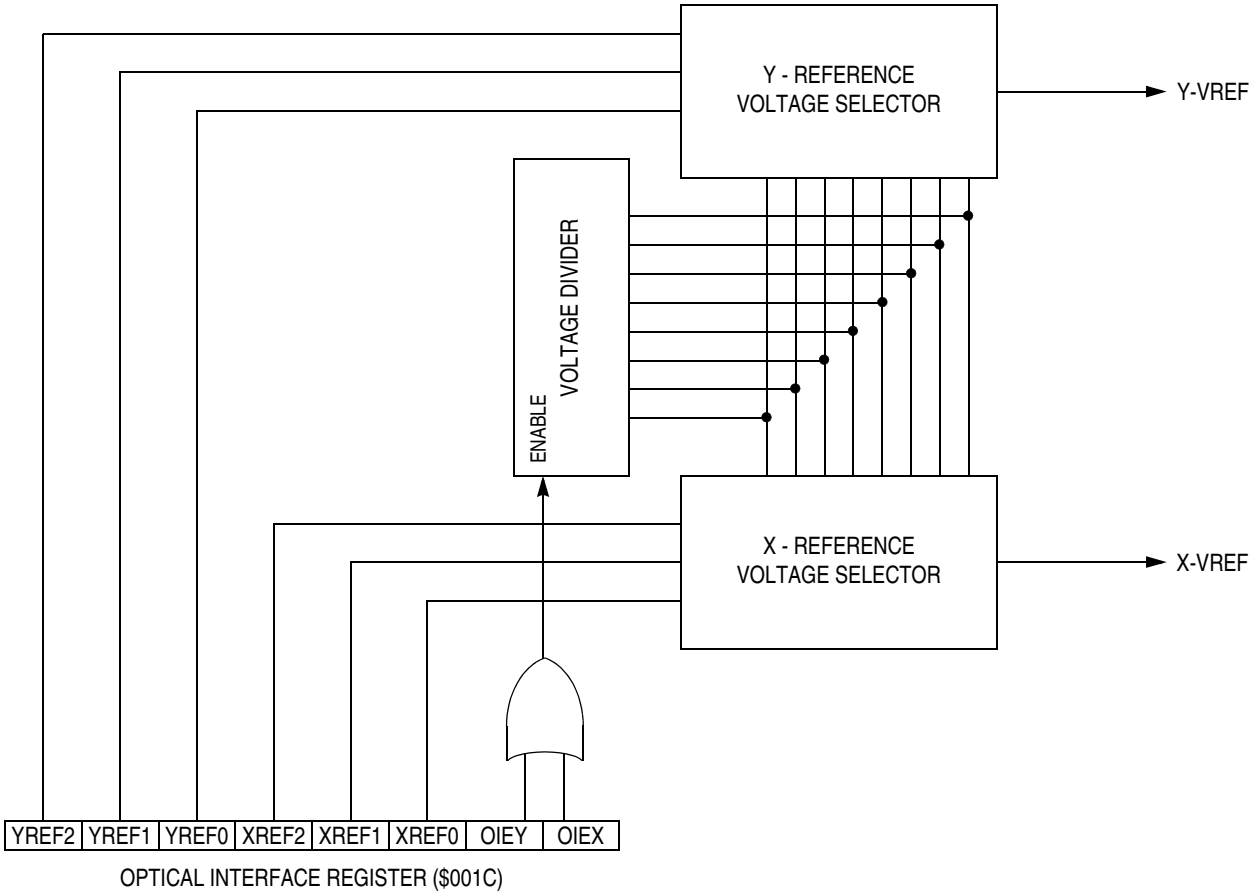

Figure 12-17. Optical Interface Voltage References

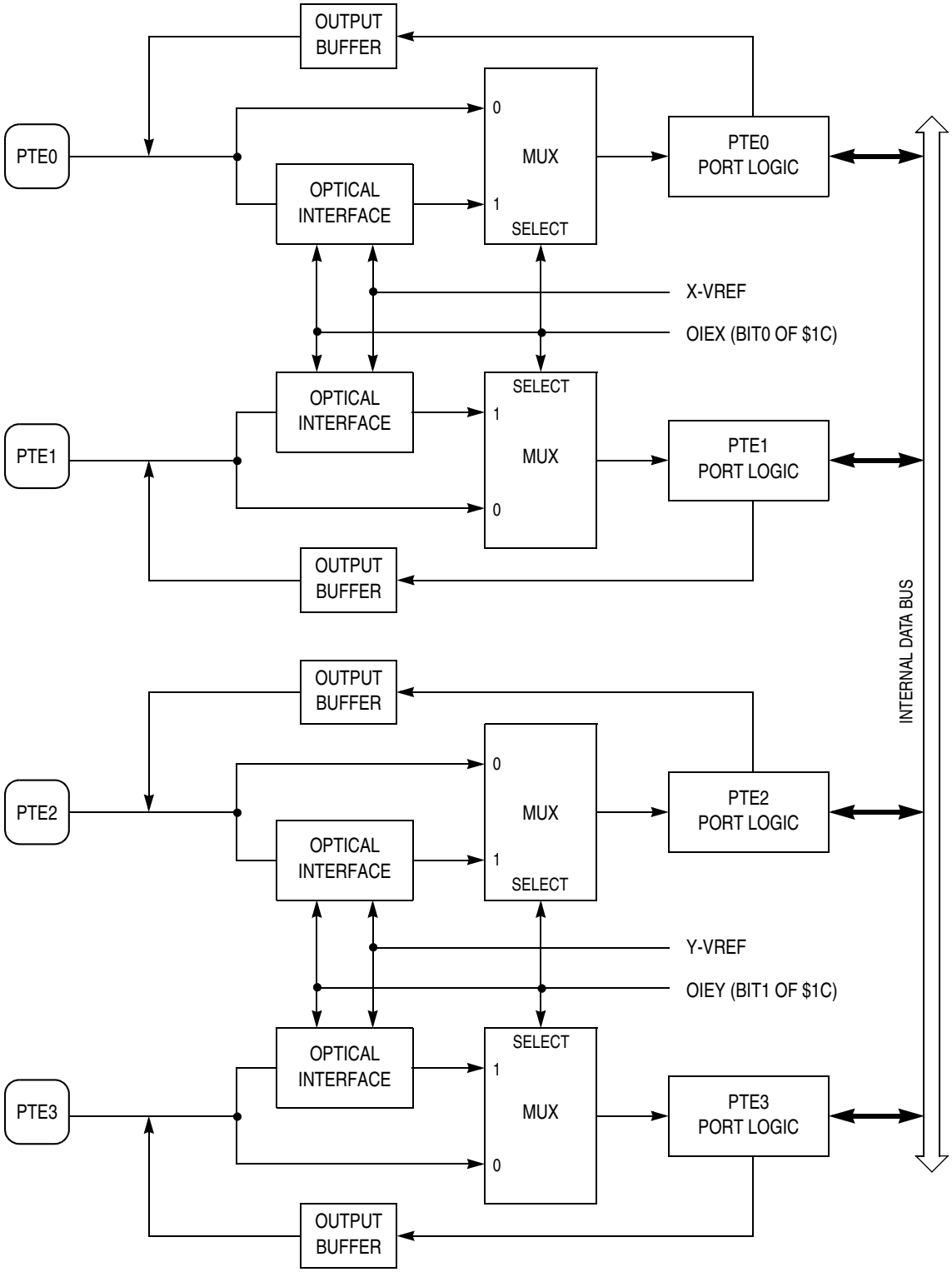

Figure 12-18. Port E Optical Coupling Interface

12.7 Port F

Port F is an 8-bit general-purpose bidirectional I/O port that shares its pins with the keyboard interrupt module (KBI). All Port F pins have built-in schmitt triggered input and software configurable pull-up.

12.7.1 Port F Data Register (PTF)

The port F data register contains a data latch for each of the eight port F pins.

Address: $0009

	Bit 7	6	5	4	3	2	1	Bit 0
Read: Write:	PTF7	PTF6	PTF5	PTF4	PTF3	PTF2	PTF1	PTF0
Reset:	Unaffected by reset							
Alternate Function:	KBF7	KBF6	KBF5	KBF4	KBF3	KBF2	KBF1	KBF0

Figure 12-19. Port F Data Register (PTF)

PTF[7:0] — Port F Data Bits

These read/write bits are software programmable. Data direction of each port F pin is under the control of the corresponding bit in data direction register F. Reset has no effect on port F data.

The port-F keyboard interrupt enable bits, KBFIE7—KBFIE0, in the port-F keyboard interrupt enable register (KBFIER), enable the port F pins as external interrupt pins. See Chapter 15 Keyboard Interrupt Module (KBI).

The PFPE[7:0] bits in the port F keyboard pull-up enable register enable individual pull-ups on port F pins if the respective pin is configured as an input. (See 15.5.3.3 Port-F Pull-up Enable Register.)

12.7.2 Data Direction Register F (DDRF)

Data direction register F determines whether each port F pin is an input or an output. Writing a logic one to a DDRF bit enables the output buffer for the corresponding port F pin; a logic zero disables the output buffer.

Address: $000B

	Bit 7	6	5	4	3	2	1	Bit 0
Read: Write:	DDRF7	DDRF6	DDRF5	DDRF4	DDRF3	DDRF2	DDRF1	DDRF0
Reset:	0	0	0	0	0	0	0	0

Figure 12-20. Data Direction Register F (DDRF)

DDRF[7:0] — Data Direction Register F Bits

These read/write bits control port F data direction. Reset clears DDRF[7:0], configuring all port F pins as inputs.

1 = Corresponding port F pin configured as output
0 = Corresponding port F pin configured as input

NOTE

Avoid glitches on port F pins by writing to the port F data register before changing data direction register F bits from 0 to 1.

Figure 12-3 shows the port F I/O logic.

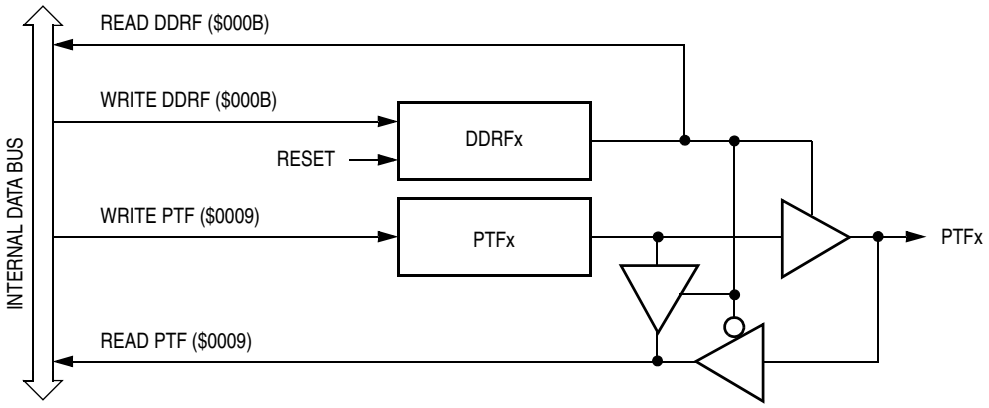

Figure 12-21. Port F I/O Circuit

When bit DDRFx is a logic one, reading address $0009 reads the PTFx data latch. When bit DDRFx is a logic zero, reading address $0009 reads the voltage level on the pin. The data latch can always be written, regardless of the state of its data direction bit. Table 12-6 summarizes the operation of the port F pins.

Table 12-6. Port F Pin Functions

DDRE Bit	PTE Bit	I/O Pin Mode	Accesses to DDRE	Accesses to PTE	
			Read/Write	Read	Write
0	X(1)	Input, Hi-Z(2)	DDRF[7:0]	Pin	PTF[7:0](3)
1	X	Output	DDRF[7:0]	PTF[7:0]	PTF[7:0]

1. X = don't care
2. Hi-Z = high impedance
3. Writing affects data register, but does not affect input.

12.8 Port Options

All pins of port A, port B and port C have programmable pullup resistors. Port C also has LED drive capability.

12.8.1 Port Option Control Register (POC)

The pullup option for each port is controlled by one bit in the port option control register. One bit controls the LED drive configuration on port C.

Address: $001D

	Bit 7	6	5	4	3	2	1	Bit 0
Read:	0	0	LDD	0	0	PCP	PBP	PAP
Write:								
Reset:	0	0	1	0	0	0	0	0

= Unimplemented

Figure 12-22. Port Option Control Register (POC)

LDD — LED Direct Drive Control

This read/write bit controls the output current capability of port C. When set, the port C pins have current limiting ability so that a LED can be connected directly between the port pin and V_{DD} or V_{SS} without the need of a series resistor.

1 = When respective port is configured as an output, make port C become current limiting 3 mA source/10 mA sink port pins

0 = Configure port C to become standard I/O port pins

PCP — Port C Pullup Enable

This read/write bit controls the pullup option for port C[7:0] if its respective port pin is configured as an input.

1 = Configure port C to have internal pullups

0 = Disconnect port C internal pullups

PBP — Port B Pullup Enable

This read/write bit controls the pullup option for the eight bits of port B if its respective port pin is configured as an input.

1 = Configure port B to have internal pullups

0 = Disconnect port B internal pullups

PAP — Port A Pullup Enable

This read/write bit controls the pullup option for the eight bits of port A if its respective port pin is configured as an input.

1 = Configure port A to have internal pullups

0 = Disconnect port A internal pullups

Chapter 13
Computer Operating Properly (COP)

13.1 Introduction

This section describes the computer operating properly module, a free-running counter that generates a reset if allowed to overflow. The COP module helps software recover from runaway code. Prevent a COP reset by periodically clearing the COP counter.

13.2 Functional Description

Figure 13-1 shows the structure of the COP module.

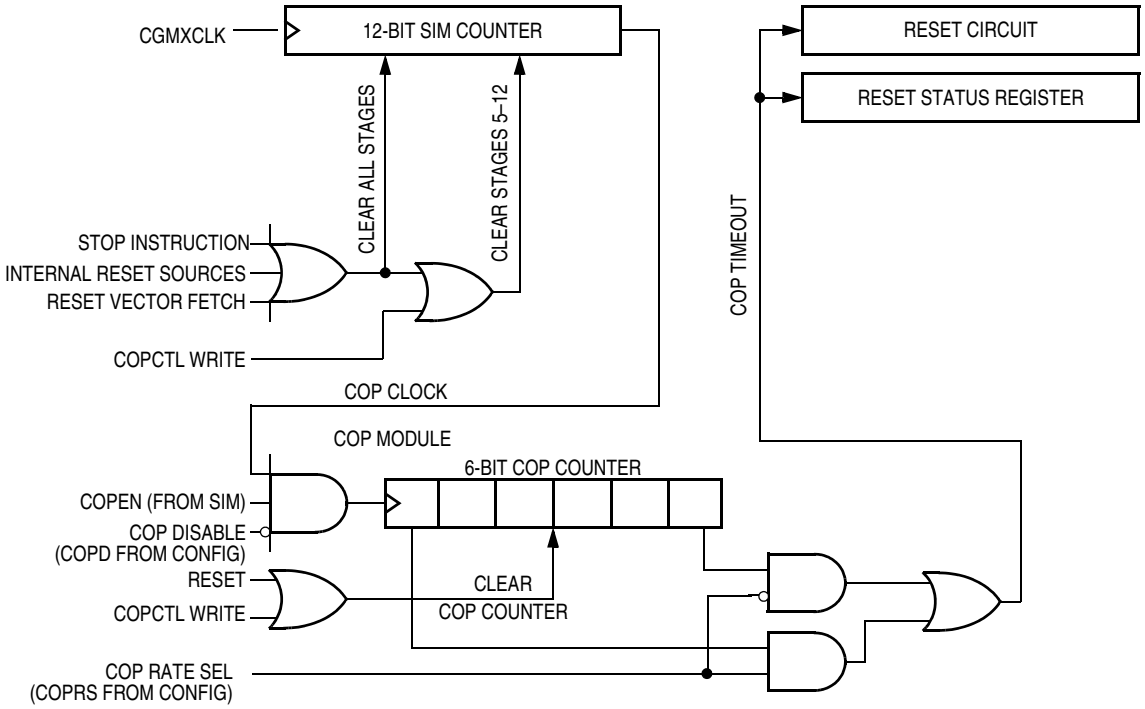

Figure 13-1. COP Block Diagram

Addr.	Register Name		Bit 7	6	5	4	3	2	1	Bit 0
$001F	Configuration Register (CONFIG)†	Read:	0	0	0	0	SSREC	COPRS	STOP	COPD
		Write:								
		Reset:	0	0	0	0	0	0	0	0
$FFFF	COP Control Register (COPCTL)	Read:	Low byte of reset vector							
		Write:	Clear COP counter							
		Reset:	Unaffected by reset							

† One-time writable register

= Unimplemented

Figure 13-2. COP Register Summary

The COP counter is a free-running 6-bit counter preceded by the 12-bit SIM counter. If not cleared by software, the COP counter overflows and generates an asynchronous reset after $2^{18} – 2^4$ or $2^{13} – 2^4$ CGMXCLK cycles, depending on the setting of the COP rate select bit, COPRS, in the configuration register. With a $2^{18} – 2^4$ CGMXCLK cycle overflow option, a 6MHz crystal gives a COP timeout period of 43.688ms. Writing any value to location $FFFF before an overflow occurs prevents a COP reset by clearing the COP counter and stages 12 through 5 of the SIM counter.

NOTE

Service the COP immediately after reset and before entering or after exiting stop mode to guarantee the maximum time before the first COP counter overflow.

A COP reset pulls the $\overline{\text{RST}}$ pin low for 32 CGMXCLK cycles and sets the COP bit in the reset status register (RSR) (see 7.7.2 Reset Status Register (RSR)).

NOTE

Place COP clearing instructions in the main program and not in an interrupt subroutine. Such an interrupt subroutine could keep the COP from generating a reset even while the main program is not working properly.

13.3 I/O Signals

The following paragraphs describe the signals shown in Figure 13-1.

13.3.1 CGMXCLK

CGMXCLK is the crystal oscillator output signal. CGMXCLK frequency is equal to the crystal frequency.

13.3.2 COPCTL Write

Writing any value to the COP control register (COPCTL) (see 13.4 COP Control Register (COPCTL)) clears the COP counter and clears bits 12 through 4 of the SIM counter. Reading the COP control register returns the low byte of the reset vector.

13.3.3 Power-On Reset

The power-on reset (POR) circuit in the SIM clears the SIM counter 4096 CGMXCLK cycles after power-up.

13.3.4 Internal Reset

An internal reset clears the SIM counter and the COP counter.

13.3.5 Reset Vector Fetch

A reset vector fetch occurs when the vector address appears on the data bus. A reset vector fetch clears the SIM counter.

13.3.6 COPD (COP Disable)

The COPD signal reflects the state of the COP disable bit (COPD) in the configuration register (CONFIG). See Figure 13-3.

13.3.7 COPRS (COP Rate Select)

The COPRS signal reflects the state of the COP rate select bit (COPRS) in the configuration register. See Figure 13-3.

Address: $001F

	Bit 7	6	5	4	3	2	1	Bit 0
Read:	0	0	0	0	SSREC	COPRS	STOP	COPD
Write:								
Reset:	0	0	0	0	0	0	0	0

= Unimplemented

This is a write-once after reset register.
(See Chapter 5 Configuration Register (CONFIG).)

Figure 13-3. Configuration Register (CONFIG)

COPRS — COP Rate Select Bit

COPRS selects the COP timeout period. Reset clears COPRS.

1 = COP reset cycle is $(2^{13}-2^{4})\times$CGMXCLK
0 = COP reset cycle is $(2^{18}-2^{4})\times$CGMXCLK

COPD — COP Disable Bit

COPD disables the COP module.

1 = COP module disabled
0 = COP module enabled

13.4 COP Control Register (COPCTL)

The COP control register is located at address $FFFF and overlaps the reset vector. Writing any value to $FFFF clears the COP counter and starts a new timeout period. Reading location $FFFF returns the low byte of the reset vector.

Address: $FFFF

	Bit 7	6	5	4	3	2	1	Bit 0
Read:	Low byte of reset vector							
Write:	Clear COP counter							
Reset:	Unaffected by reset							

Figure 13-4. COP Control Register (COPCTL)

13.5 Interrupts

The COP does not generate CPU interrupt requests.

13.6 Monitor Mode

The COP is disabled in monitor mode when $V_{DD} + V_{HI}$ is present on the $\overline{IRQ1}$/V<st-subsmallcaps>pp pin or on the $\overline{RST}$ pin.

13.7 Low-Power Modes

The WAIT and STOP instructions put the MCU in low-power consumption standby modes.

13.7.1 Wait Mode

The COP continues to operate during wait mode. To prevent a COP reset during wait mode, periodically clear the COP counter in a CPU interrupt routine.

13.7.2 Stop Mode

Stop mode turns off the CGMXCLK input to the COP and clears the SIM counter. Service the COP immediately before entering or after exiting stop mode to ensure a full COP timeout period after entering or exiting stop mode.

13.8 COP Module During Break Mode

The COP is disabled during a break interrupt when $V_{DD} + V_{HI}$ is present on the $\overline{RST}$ pin.

Chapter 14
External Interrupt (IRQ)

14.1 Introduction

The IRQ module provides a non-maskable interrupt input.

14.2 Features

Features of the IRQ module include the following:

- A Dedicated External Interrupt Pin ($\overline{\text{IRQ1}}$)
- IRQ1 Interrupt Control Bits
- Hysteresis Buffer
- Programmable Edge-only or Edge and Level Interrupt Sensitivity
- Automatic Interrupt Acknowledge
- $\overline{\text{IRQ1}}$ pin includes internal pullup resistor

14.3 Functional Description

A logic zero applied to the external interrupt pin can latch a CPU interrupt request. Figure 14-1 shows the structure of the IRQ module.

Interrupt signals on the $\overline{\text{IRQ1}}$ pin are latched into the IRQ1 latch. An interrupt latch remains set until one of the following actions occurs:

- Vector fetch — A vector fetch automatically generates an interrupt acknowledge signal that clears the IRQ latch.
- Software clear — Software can clear the interrupt latch by writing to the acknowledge bit in the interrupt status and control register (ISCR). Writing a logic one to the ACK1 bit clears the IRQ1 latch.
- Reset — A reset automatically clears the interrupt latch.

The external interrupt pin is falling-edge-triggered and is software-configurable to be either falling-edge or low-level-triggered. The MODE1 bit in the ISCR controls the triggering sensitivity of the $\overline{\text{IRQ1}}$ pin.

When the interrupt pin is edge-triggered only, the CPU interrupt request remains set until a vector fetch, software clear, or reset occurs.

When the interrupt pin is both falling-edge and low-level-triggered, the CPU interrupt request remains set until both of the following occur:

- Vector fetch or software clear
- Return of the interrupt pin to logic one

The vector fetch or software clear may occur before or after the interrupt pin returns to logic one. As long as the pin is low, the interrupt request remains pending. A reset will clear the latch and the MODE1 control bit, thereby clearing the interrupt even if the pin stays low.

When set, the IMASK1 bit in the ISCR mask all external interrupt requests. A latched interrupt request is not presented to the interrupt priority logic unless the IMASK1 bit is clear.

NOTE

The interrupt mask (I) in the condition code register (CCR) masks all interrupt requests, including external interrupt requests.(See 7.5 Exception Control.)

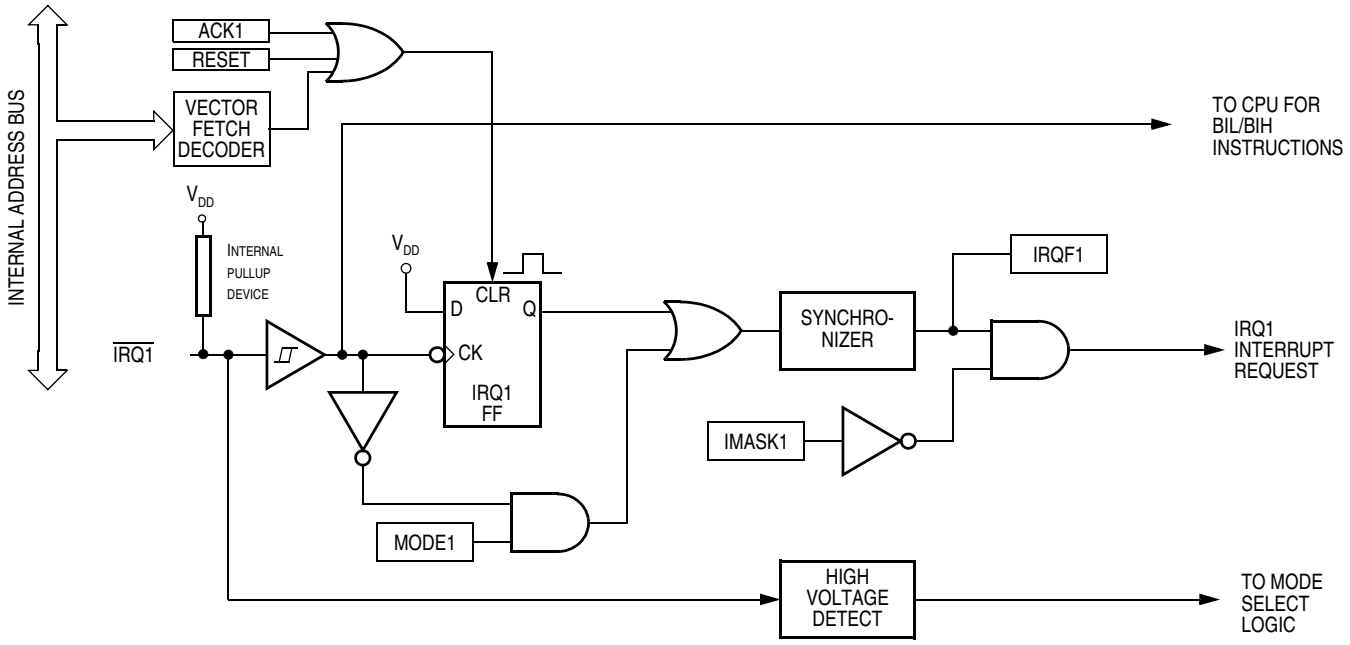

Figure 14-1. IRQ Module Block Diagram

Addr.	Register Name		Bit 7	6	5	4	3	2	1	Bit 0
$001E	IRQ Status/Control Register (ISCR)	Read:	0	0	0	0	IRQF1	0	IMASK1	MODE1
		Write:						ACK1		
		Reset:	0	0	0	0	0	0	0	0

= Unimplemented

Figure 14-2. IRQ Register Summary

14.3.1 $\overline{\text{IRQ1}}$ Pin

A logic zero on the $\overline{\text{IRQ1}}$ pin can latch an interrupt request into the IRQ1 latch. A vector fetch, software clear, or reset clears the IRQ1 latch.

If the MODE1 bit is set, the $\overline{\text{IRQ1}}$ pin is both falling-edge-sensitive and low-level-sensitive. With MODE1 set, both of the following actions must occur to clear IRQ1:

- Vector fetch or software clear — A vector fetch generates an interrupt acknowledge signal to clear the latch. Software may generate the interrupt acknowledge signal by writing a logic one to the ACK1 bit in the interrupt status and control register (ISCR). The ACK1 bit is useful in applications that poll the $\overline{\text{IRQ1}}$ pin and require software to clear the IRQ1 latch. Writing to the ACK1 bit prior to leaving an interrupt service routine can also prevent spurious interrupts due to noise. Setting ACK1 does not affect subsequent transitions on the $\overline{\text{IRQ1}}$ pin. A falling edge that occurs after writing to the ACK1 bit latches another interrupt request. If the IRQ1 mask bit, IMASK1, is clear, the CPU loads the program counter with the vector address at locations $FFFA and $FFFB.
- Return of the $\overline{\text{IRQ1}}$ pin to logic one — As long as the $\overline{\text{IRQ1}}$ pin is at logic zero, IRQ1 remains active.

The vector fetch or software clear and the return of the $\overline{\text{IRQ1}}$ pin to logic one may occur in any order. The interrupt request remains pending as long as the $\overline{\text{IRQ1}}$ pin is at logic zero. A reset will clear the latch and the MODE1 control bit, thereby clearing the interrupt even if the pin stays low.

If the MODE1 bit is clear, the $\overline{\text{IRQ1}}$ pin is falling-edge-sensitive only. With MODE1 clear, a vector fetch or software clear immediately clears the IRQ1 latch.

The IRQF1 bit in the ISCR register can be used to check for pending interrupts. The IRQF1 bit is not affected by the IMASK1 bit, which makes it useful in applications where polling is preferred.

Use the BIH or BIL instruction to read the logic level on the $\overline{\text{IRQ1}}$ pin.

NOTE

When using the level-sensitive interrupt trigger, avoid false interrupts by masking interrupt requests in the interrupt routine.

14.4 IRQ Module During Break Interrupts

The system integration module (SIM) controls whether the IRQ1 latch can be cleared during the break state. The BCFE bit in the break flag control register (BFCR) enables software to clear the latches during the break state. (See Chapter 7 System Integration Module (SIM).)

To allow software to clear the IRQ1 latch during a break interrupt, write a logic one to the BCFE bit. If a latch is cleared during the break state, it remains cleared when the MCU exits the break state.

To protect the latches during the break state, write a logic zero to the BCFE bit. With BCFE at logic zero (its default state), writing to the ACK1 bit in the IRQ status and control register during the break state has no effect on the IRQ latch.

14.5 IRQ Status and Control Register (ISCR)

The IRQ Status and Control Register (ISCR) controls and monitors operation of the IRQ module. The ISCR has the following functions:

- Shows the state of the IRQ1 flag
- Clears the IRQ1 latch
- Masks IRQ1 and interrupt request
- Controls triggering sensitivity of the $\overline{\text{IRQ1}}$ interrupt pin

Address: $001E

	Bit 7	6	5	4	3	2	1	Bit 0
Read:	0	0	0	0	IRQF1	0	IMASK1	MODE1
Write:						ACK1		
Reset:	0	0	0	0	0	0	0	0

= Unimplemented

Figure 14-3. IRQ Status and Control Register (ISCR)

IRQF1 — IRQ1 Flag

This read-only status bit is high when the IRQ1 interrupt is pending.

1 = $\overline{\text{IRQ1}}$ interrupt pending
0 = $\overline{\text{IRQ1}}$ interrupt not pending

ACK1 — IRQ1 Interrupt Request Acknowledge Bit

Writing a logic one to this write-only bit clears the IRQ1 latch. ACK1 always reads as logic zero. Reset clears ACK1.

IMASK1 — IRQ1 Interrupt Mask Bit

Writing a logic one to this read/write bit disables IRQ1 interrupt requests. Reset clears IMASK1.

1 = IRQ1 interrupt requests disabled
0 = IRQ1 interrupt requests enabled

MODE1 — IRQ1 Edge/Level Select Bit

This read/write bit controls the triggering sensitivity of the $\overline{\text{IRQ1}}$ pin. Reset clears MODE1.

1 = $\overline{\text{IRQ1}}$ interrupt requests on falling edges and low levels
0 = $\overline{\text{IRQ1}}$ interrupt requests on falling edges only

Chapter 15
Keyboard Interrupt Module (KBI)

15.1 Introduction

The keyboard module provides twenty independently maskable external interrupts which are accessible via PTD7-PTD0, PTE3-PTE0 and PTF7-PTF0. Though the functionality of the three keyboard interrupts on the three ports is similar, the implementation is quite different. On port-D, enabling keyboard interrupt on a pin also enables its internal pull-up device. On port-E, the pull-up device is control by the PEPEx bit resided in the Port-E Keyboard Interrupt Enable Register (KBEIER). On port-F, the pull-up device is control by the PFPEx bit resided in the Port-F Control Register (PFPER).

15.2 Features

- Twenty Keyboard Interrupt Pins with Separate Keyboard Interrupt Enable Bits and three Keyboard Interrupt Masks.
- Hysteresis Buffers
- Internal Pull-ups.
- Programmable Edge-Only or Edge- and Level- Interrupt Sensitivity
- Exit from Low-Power Modes

Addr.	Register Name		Bit 7	6	5	4	3	2	1	Bit 0
$000C	Port D Keyboard Status and Control Register (KBDSCR)	Read:	0	0	0	0	KEYDF	0	IMASKD	MODED
		Write:						ACKD		
		Reset:	0	0	0	0	0	0	0	0
$000D	Port D Keyboard Interrupt Enable Register (KBDIER)	Read: Write:	KBDIE7	KBDIE6	KBDIE5	KBDIE4	KBDIE3	KBDIE2	KBDIE1	KBDIE0
		Reset:	0	0	0	0	0	0	0	0
$000E	Port E Keyboard Status and Control Register (KBESCR)	Read:	0	0	0	0	KEYEF	0	IMASKE	MODEE
		Write:						ACKE		
		Reset:	0	0	0	0	0	0	0	0
$000F	Port E Keyboard Interrupt Enable Register (KBEIER)	Read: Write:	PEPE3	PEPE2	PEPE1	PEPE0	KBEIE3	KBEIE2	KBEIE1	KBEIE0
		Reset:	0	0	0	0	0	0	0	0
$0040	Port F Keyboard Status and Control Register (KBFSCR)	Read:	0	0	0	0	KEYFF	0	IMASKF	MODEF
		Write:						ACKF		
		Reset:	0	0	0	0	0	0	0	0
$0041	Port F Keyboard Interrupt Enable Register (KBFIER)	Read: Write:	KBFIE7	KBFIE6	KBFIE5	KBFIE4	KBFIE3	KBFIE2	KBFIE1	KBFIE0
		Reset:	0	0	0	0	0	0	0	0
$0042	Port F Pull-up Enable Register (PFPER)	Read: Write:	PFPE7	PFPE6	PFPE5	PFPE4	PFPE3	PFPE2	PFPE1	PFPE0
		Reset:	1	1	1	1	1	1	1	1

= Unimplemented

Figure 15-1. KBI I/O Register Summary

15.3 Port-D Keyboard Interrupt Block Diagram

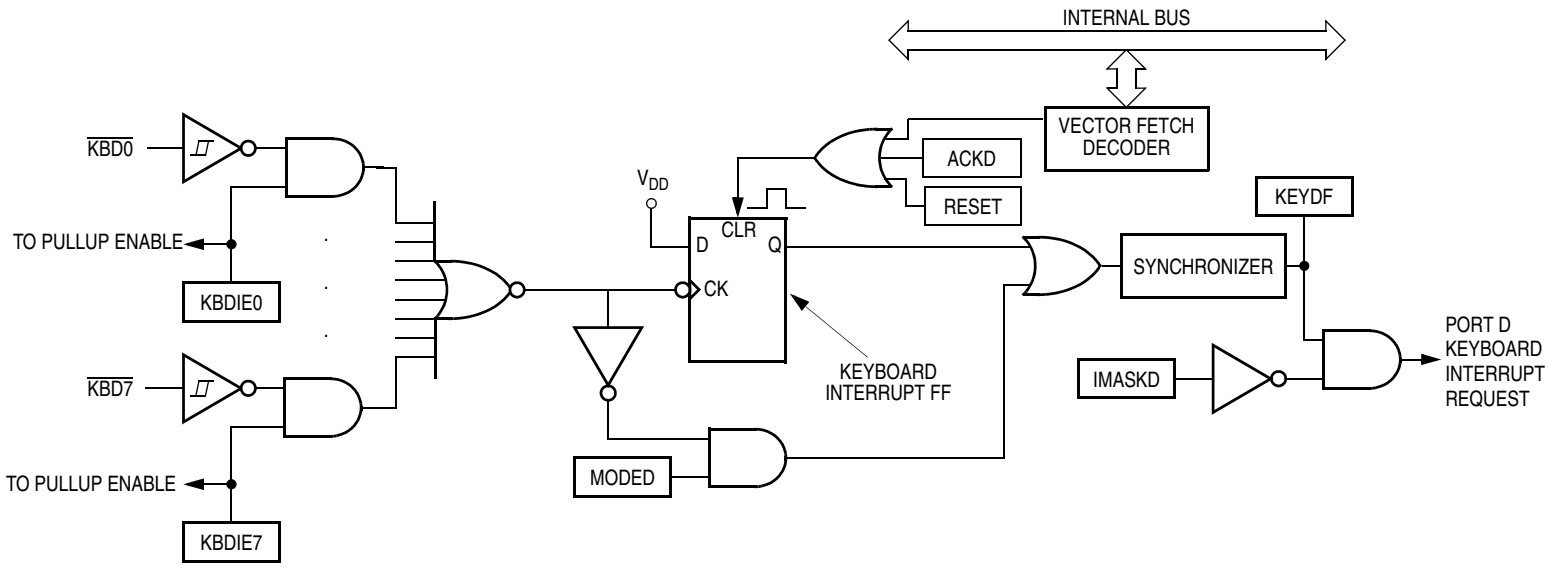

Figure 15-2. Port-D Keyboard Interrupt Block Diagram

15.3.1 Port-D Keyboard Interrupt Functional Description

Writing to the KBDIE7–KBDIE0 bits in the keyboard interrupt enable register independently enables or disables each port D pin as a keyboard interrupt pin. Enabling a keyboard interrupt pin in port-D also enables its internal pullup device. A logic 0 applied to an enabled keyboard interrupt pin latches a keyboard interrupt request.

A keyboard interrupt is latched when one or more keyboard pins goes low after all were high. The MODED bit in the keyboard status and control register controls the triggering mode of the keyboard interrupt.

- If the keyboard interrupt is edge-sensitive only, a falling edge on a keyboard pin does not latch an interrupt request if another keyboard pin is already low. To prevent losing an interrupt request on one pin because another pin is still low, software can disable the latter pin while it is low.
- If the keyboard interrupt is falling edge- and low level-sensitive, an interrupt request is present as long as any keyboard pin is low.

If the MODED bit is set, the keyboard interrupt pins are both falling edge- and low level-sensitive, and both of the following actions must occur to clear a keyboard interrupt request:

- Vector fetch or software clear — A vector fetch generates an interrupt acknowledge signal to clear the interrupt request. Software may generate the interrupt acknowledge signal by writing a logic 1 to the ACKD bit in the keyboard status and control register KBDSCR. The ACKD bit is useful in applications that poll the keyboard interrupt pins and require software to clear the keyboard interrupt request. Writing to the ACKD bit prior to leaving an interrupt service routine can also prevent spurious interrupts due to noise. Setting ACKD does not affect subsequent transitions on the keyboard interrupt pins. A falling edge that occurs after writing to the ACKD bit latches another interrupt request. If the keyboard interrupt mask bit, IMASKD, is clear, the CPU loads the program counter with the vector address at locations $FFEA and $FFEB.
- Return of all enabled keyboard interrupt pins to logic 1 — As long as any enabled keyboard interrupt pin is at logic 0, the keyboard interrupt remains set.

The vector fetch or software clear and the return of all enabled keyboard interrupt pins to logic 1 may occur in any order.

If the MODED bit is clear, the keyboard interrupt pin is falling-edge-sensitive only. With MODED clear, a vector fetch or software clear immediately clears the keyboard interrupt request.

Reset clears the keyboard interrupt request and the MODED bit, clearing the interrupt request even if a keyboard interrupt pin stays at logic 0.

The keyboard flag bit (KEYDF) in the keyboard status and control register can be used to see if a pending interrupt exists. The KEYDF bit is not affected by the keyboard interrupt mask bit (IMASKD) which makes it useful in applications where polling is preferred.

To determine the logic level on a keyboard interrupt pin, use the data direction register to configure the pin as an input and read the data register.

NOTE

Setting a keyboard interrupt enable bit (KBDIEx) forces the corresponding keyboard interrupt pin to be an input, overriding the data direction register. However, the data direction register bit must be a logic 0 for software to read the pin.

15.3.2 Port-D Keyboard Initialization

When a keyboard interrupt pin is enabled, it takes time for the internal pullup to reach a logic 1. Therefore a false interrupt can occur as soon as the pin is enabled.

To prevent a false interrupt on keyboard initialization:

1. Mask keyboard interrupts by setting the IMASKD bit in the keyboard status and control register.
2. Enable the KBI pins by setting the appropriate KBDIEx bits in the keyboard interrupt enable register.
3. Write to the ACKD bit in the keyboard status and control register to clear any false interrupts.
4. Clear the IMASKD bit.

An interrupt signal on an edge-triggered pin can be acknowledged immediately after enabling the pin. An interrupt signal on an edge- and level-triggered interrupt pin must be acknowledged after a delay that depends on the external load.

Another way to avoid a false interrupt for port-D:

1. Configure the keyboard pins as outputs by setting the appropriate DDRD bits in data direction register D.
2. Write logic 1s to the appropriate port-D data register bits.
3. Enable the KBDI pins by setting the appropriate KBDIEx bits in the keyboard interrupt enable register.

15.3.3 Port-D Keyboard Interrupt Registers

15.3.3.1 Port-D Keyboard Status and Control Register:

- Flags keyboard interrupt requests.
- Acknowledges keyboard interrupt requests.
- Masks keyboard interrupt requests.
- Controls keyboard interrupt triggering sensitivity.

Address: $000C

	Bit 7	6	5	4	3	2	1	Bit 0
Read:	0	0	0	0	KEYDF	0	IMASKD	MODED
Write:						ACKD		
Reset:	0	0	0	0	0	0	0	0

= Unimplemented

Figure 15-3. Port-D Keyboard Status and Control Register (KBDSCR)

Bits [7:4] — Not used

These read-only bits always read as logic 0s.

KEYDF — Port-D Keyboard Flag Bit

This read-only bit is set when a keyboard interrupt is pending on port-D. Reset clears the KEYDF bit.

1 = Keyboard interrupt pending
0 = No keyboard interrupt pending

ACKD — Port-D Keyboard Acknowledge Bit

Writing a logic 1 to this write-only bit clears the keyboard interrupt request on port-D. ACKD always reads as logic 0. Reset clears ACKD.

IMASKD — Port-D Keyboard Interrupt Mask Bit

Writing a logic 1 to this read/write bit prevents the output of the keyboard interrupt mask from generating interrupt requests on port-D. Reset clears the IMASKD bit.

1 = Keyboard interrupt requests masked
0 = Keyboard interrupt requests not masked

MODED — Port-D Keyboard Triggering Sensitivity Bit

This read/write bit controls the triggering sensitivity of the keyboard interrupt pins on port-D. Reset clears MODED.

1 = Keyboard interrupt requests on falling edges and low levels
0 = Keyboard interrupt requests on falling edges only

15.3.3.2 Port-D Keyboard Interrupt Enable Register

The port-D keyboard interrupt enable register enables or disables each port-D pin to operate as a keyboard interrupt pin.

Address: $000D

	Bit 7	6	5	4	3	2	1	Bit 0
Read: Write:	KBDIE7	KBDIE6	KBDIE5	KBDIE4	KBDIE3	KBDIE2	KBDIE1	KBDIE0
Reset:	0	0	0	0	0	0	0	0

Figure 15-4. Port-D Keyboard Interrupt Enable Register (KBDIER)

KBDIE7–KBDIE0 — Port-D Keyboard Interrupt Enable Bits

Each of these read/write bits enables the corresponding keyboard interrupt pin on port-D to latch interrupt requests. Reset clears the keyboard interrupt enable register.

1 = KBDx pin enabled as keyboard interrupt pin
0 = KBDx pin not enabled as keyboard interrupt pin

15.4 Port-E Keyboard Interrupt Block Diagram

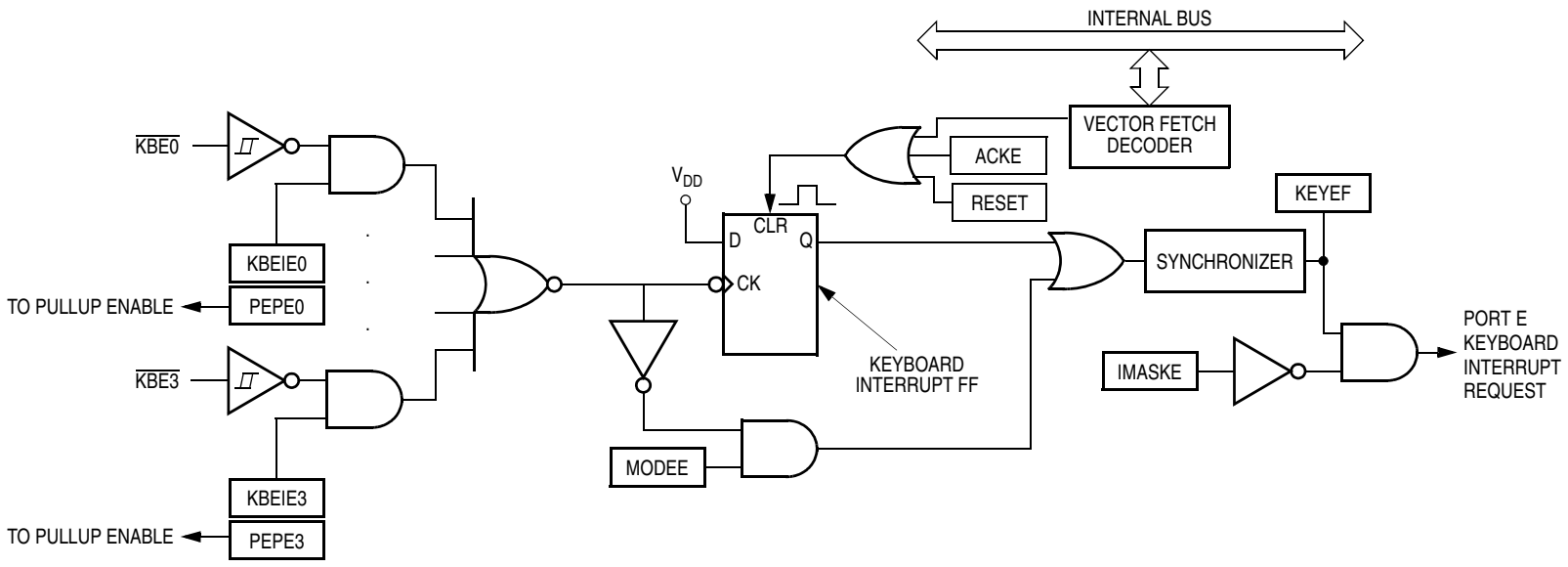

Figure 15-5. Port-E Keyboard Interrupt Block Diagram

15.4.1 Port-E Keyboard Interrupt Functional Description

Writing to the KBEIE3–KBEIE0 bits in the keyboard interrupt enable register independently enables or disables each port E pin as a keyboard interrupt pin. Enabling a keyboard interrupt pin in port-E does not enable its internal pullup device. Writing to the PEPE3–PEPE0 bits in the keyboard interrupt enable register independently enables or disables each port E pin pull-up device. A logic 0 applied to an enabled keyboard interrupt pin latches a keyboard interrupt request.

A keyboard interrupt is latched when one or more keyboard pins goes low after all were high. The MODEE bit in the keyboard status and control register controls the triggering mode of the keyboard interrupt.

- If the keyboard interrupt is edge-sensitive only, a falling edge on a keyboard pin does not latch an interrupt request if another keyboard pin is already low. To prevent losing an interrupt request on one pin because another pin is still low, software can disable the latter pin while it is low.
- If the keyboard interrupt is falling edge- and low level-sensitive, an interrupt request is present as long as any keyboard pin is low.

If the MODEE bit is set, the keyboard interrupt pins are both falling edge- and low level-sensitive, and both of the following actions must occur to clear a keyboard interrupt request:

- Vector fetch or software clear — A vector fetch generates an interrupt acknowledge signal to clear the interrupt request. Software may generate the interrupt acknowledge signal by writing a logic 1 to the ACKE bit in the keyboard status and control register KBESCR. The ACKE bit is useful in applications that poll the keyboard interrupt pins and require software to clear the keyboard interrupt request. Writing to the ACKE bit prior to leaving an interrupt service routine can also prevent spurious interrupts due to noise. Setting ACKE does not affect subsequent transitions on the keyboard interrupt pins. A falling edge that occurs after writing to the ACKE bit latches another interrupt request. If the keyboard interrupt mask bit, IMASKE, is clear, the CPU loads the program counter with the vector address at locations $FFEC and $FFED.
- Return of all enabled keyboard interrupt pins to logic 1 — As long as any enabled keyboard interrupt pin is at logic 0, the keyboard interrupt remains set.

The vector fetch or software clear and the return of all enabled keyboard interrupt pins to logic 1 may occur in any order.

If the MODEE bit is clear, the keyboard interrupt pin is falling-edge-sensitive only. With MODEE clear, a vector fetch or software clear immediately clears the keyboard interrupt request.

Reset clears the keyboard interrupt request and the MODEE bit, clearing the interrupt request even if a keyboard interrupt pin stays at logic 0.

The keyboard flag bit (KEYEF) in the keyboard status and control register can be used to see if a pending interrupt exists. The KEYEF bit is not affected by the keyboard interrupt mask bit (IMASKE) which makes it useful in applications where polling is preferred.

To determine the logic level on a keyboard interrupt pin, disable the pull-up device, use the data direction register to configure the pin as an input and then read the data register.

NOTE

Setting a keyboard interrupt enable bit (KBEIEx) forces the corresponding keyboard interrupt pin to be an input, overriding the data direction register.

15.4.2 Port-E Keyboard Initialization

When a keyboard interrupt pin is enabled, it takes time for the internal pullup to reach a logic 1. Therefore a false interrupt can occur as soon as the pin is enabled.

To prevent a false interrupt on keyboard initialization:

1. Mask keyboard interrupts by setting the IMASKE bit in the keyboard status and control register.
2. Write to DDREx bits to make port pin an input pin.
3. Enable the KBI pins by setting the appropriate KBEIEx bits in the keyboard interrupt enable register.
4. Write to the ACKE bit in the keyboard status and control register to clear any false interrupts.
5. Clear the IMASKE bit.

An interrupt signal on an edge-triggered pin can be acknowledged immediately after enabling the pin. An interrupt signal on an edge- and level-triggered interrupt pin must be acknowledged after a delay that depends on the external load.

15.4.3 Port-E Keyboard Interrupt Registers

15.4.3.1 Port-E Keyboard Status and Control Register

- Flags keyboard interrupt requests.
- Acknowledges keyboard interrupt requests.
- Masks keyboard interrupt requests.
- Controls keyboard interrupt triggering sensitivity.

Address: $000E

	Bit 7	6	5	4	3	2	1	Bit 0
Read:	0	0	0	0	KEYEF	0	IMASKE	MODEE
Write:						ACKE		
Reset:	0	0	0	0	0	0	0	0

= Unimplemented

Figure 15-6. Port-E Keyboard Status and Control Register (KBESCR)

Bits [7:4] — Not used

These read-only bits always read as logic 0s.

KEYEF — Port-E Keyboard Flag Bit

This read-only bit is set when a keyboard interrupt is pending on port-E. Reset clears the KEYEF bit.

1 = Keyboard interrupt pending
0 = No keyboard interrupt pending

ACKE — Port-E Keyboard Acknowledge Bit

Writing a logic 1 to this write-only bit clears the keyboard interrupt request on port-E. ACKE always reads as logic 0. Reset clears ACKE.

IMASKE — Port-E Keyboard Interrupt Mask Bit

Writing a logic 1 to this read/write bit prevents the output of the keyboard interrupt mask from generating interrupt requests on port-E. Reset clears the IMASKE bit.

1 = Keyboard interrupt requests masked
0 = Keyboard interrupt requests not masked

MODEE — Port-E Keyboard Triggering Sensitivity Bit

This read/write bit controls the triggering sensitivity of the keyboard interrupt pins on port-E. Reset clears MODEE.

1 = Keyboard interrupt requests on falling edges and low levels
0 = Keyboard interrupt requests on falling edges only

15.4.3.2 Port-E Keyboard Interrupt Enable Register

The port-E keyboard interrupt enable register enables or disables each port-E pin to operate as a keyboard interrupt pin and to enable and disable the pullup device on each port-E pin.

Address: $000F

	Bit 7	6	5	4	3	2	1	Bit 0
Read: Write:	PEPE3	PEPE2	PEPE1	PEPE0	KBEIE3	KBEIE2	KBEIE1	KBEIE0
Reset:	0	0	0	0	0	0	0	0

Figure 15-7. Port-E Keyboard Interrupt Enable Register (KBEIER)

PEPE3–PEPE0 — Port-E Pull-up Enable Bits

Each of these read/write bits enable or disable the pull-up device on the corresponding port-E pin. Reset clears these bits.

1 = PEPEx pull-up device enabled.
0 = PEPEx pull-up device disabled.

KBEIE3–KBEIE0 — Port-E Keyboard Interrupt Enable Bits

Each of these read/write bits enables the corresponding keyboard interrupt pin on port-D to latch interrupt requests. Reset clears the keyboard interrupt enable register.

1 = KBEx pin enabled as keyboard interrupt pin
0 = KBEDx pin not enabled as keyboard interrupt pin

15.5 Port-F Keyboard Interrupt Block Diagram

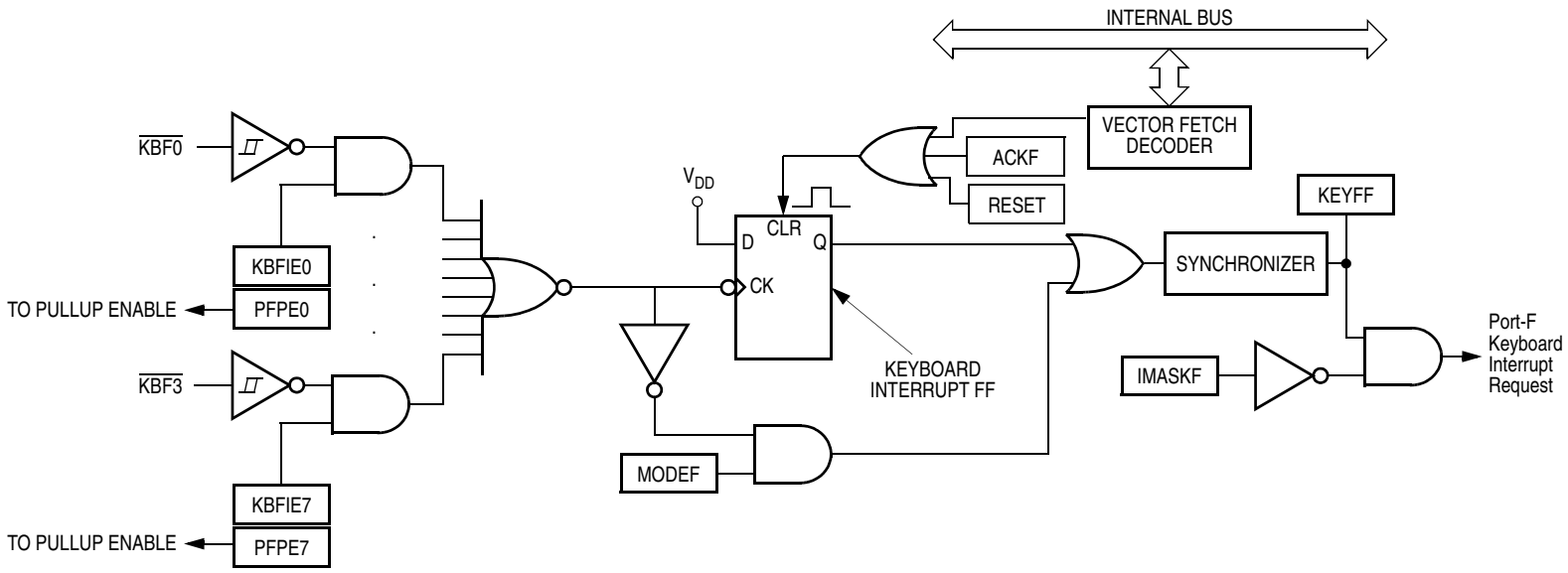

Figure 15-8. Port-F Keyboard Interrupt Block Diagram

15.5.1 Port-F Keyboard Interrupt Functional Description

Writing to the KBFIE7–KBFIE0 bits in the keyboard interrupt enable register independently enables or disables each port F pin as a keyboard interrupt pin. Enabling a keyboard interrupt pin in port-F does not enable its internal pullup device. Writing to the PFPE7–PFPE0 bits in the pull-up enable register independently enables or disables each port F pin pull-up device. A logic 0 applied to an enabled keyboard interrupt pin latches a keyboard interrupt request.

A keyboard interrupt is latched when one or more keyboard pins goes low after all were high. The MODEF bit in the keyboard status and control register controls the triggering mode of the keyboard interrupt.

- If the keyboard interrupt is edge-sensitive only, a falling edge on a keyboard pin does not latch an interrupt request if another keyboard pin is already low. To prevent losing an interrupt request on one pin because another pin is still low, software can disable the latter pin while it is low.
- If the keyboard interrupt is falling edge- and low level-sensitive, an interrupt request is present as long as any keyboard pin is low.

If the MODEF bit is set, the keyboard interrupt pins are both falling edge- and low level-sensitive, and both of the following actions must occur to clear a keyboard interrupt request:

- Vector fetch or software clear — A vector fetch generates an interrupt acknowledge signal to clear the interrupt request. Software may generate the interrupt acknowledge signal by writing a logic 1 to the ACKF bit in the keyboard status and control register KBFSCR. The ACKF bit is useful in applications that poll the keyboard interrupt pins and require software to clear the keyboard interrupt request. Writing to the ACKF bit prior to leaving an interrupt service routine can also prevent spurious interrupts due to noise. Setting ACKF does not affect subsequent transitions on the keyboard interrupt pins. A falling edge that occurs after writing to the ACKF bit latches another interrupt request. If the keyboard interrupt mask bit, IMASKF, is clear, the CPU loads the program counter with the vector address at locations $FFE8 and $FFE9.
- Return of all enabled keyboard interrupt pins to logic 1 — As long as any enabled keyboard interrupt pin is at logic 0, the keyboard interrupt remains set.

The vector fetch or software clear and the return of all enabled keyboard interrupt pins to logic 1 may occur in any order.

If the MODEF bit is clear, the keyboard interrupt pin is falling-edge-sensitive only. With MODEF clear, a vector fetch or software clear immediately clears the keyboard interrupt request.

Reset clears the keyboard interrupt request and the MODEF bit, clearing the interrupt request even if a keyboard interrupt pin stays at logic 0.

The keyboard flag bit (KEYFF) in the keyboard status and control register can be used to see if a pending interrupt exists. The KEYFF bit is not affected by the keyboard interrupt mask bit (IMASKF) which makes it useful in applications where polling is preferred.

To determine the logic level on a keyboard interrupt pin, disable the pull-up device, use the data direction register to configure the pin as an input and then read the data register.

NOTE

Setting a keyboard interrupt enable bit (KBFIEx) forces the corresponding keyboard interrupt pin to be an input, overriding the data direction register.

15.5.2 Port-F Keyboard Initialization

When a keyboard interrupt pin is enabled, it takes time for the internal pullup to reach a logic 1. Therefore a false interrupt can occur as soon as the pin is enabled.

To prevent a false interrupt on keyboard initialization:

1. Mask keyboard interrupts by setting the IMASKF bit in the keyboard status and control register.
2. Write to DDRFx bits to make the port pin an input pin.
3. Enable the KBI pins by setting the appropriate KBFIEx bits in the keyboard interrupt enable register.
4. Write to the ACKF bit in the keyboard status and control register to clear any false interrupts.
5. Clear the IMASKF bit.

An interrupt signal on an edge-triggered pin can be acknowledged immediately after enabling the pin. An interrupt signal on an edge- and level-triggered interrupt pin must be acknowledged after a delay that depends on the external load.

15.5.3 Port-F Keyboard Interrupt Registers

15.5.3.1 Port-F Keyboard Status and Control Register

- Flags keyboard interrupt requests.
- Acknowledges keyboard interrupt requests.
- Masks keyboard interrupt requests.
- Controls keyboard interrupt triggering sensitivity.

Address: $0040

	Bit 7	6	5	4	3	2	1	Bit 0
Read:	0	0	0	0	KEYFF	0	IMASKF	MODEF
Write:						ACKF		
Reset:	0	0	0	0	0	0	0	0

= Unimplemented

Figure 15-9. Port-F Keyboard Status and Control Register (KBFSCR)

Bits [7:4] — Not used

These read-only bits always read as logic 0s.

KEYFF — Port-F Keyboard Flag Bit

This read-only bit is set when a keyboard interrupt is pending on port-F. Reset clears the KEYFF bit.

1 = Keyboard interrupt pending
0 = No keyboard interrupt pending

ACKF — Port-F Keyboard Acknowledge Bit

Writing a logic 1 to this write-only bit clears the keyboard interrupt request on port-F. ACKF always reads as logic 0. Reset clears ACKF.

IMASKF — Port-F Keyboard Interrupt Mask Bit

Writing a logic 1 to this read/write bit prevents the output of the keyboard interrupt mask from generating interrupt requests on port-F. Reset clears the IMASKF bit.

1 = Keyboard interrupt requests masked
0 = Keyboard interrupt requests not masked

MODEF — Port-F Keyboard Triggering Sensitivity Bit

This read/write bit controls the triggering sensitivity of the keyboard interrupt pins on port-F. Reset clears MODEF.

1 = Keyboard interrupt requests on falling edges and low levels
0 = Keyboard interrupt requests on falling edges only

15.5.3.2 Port-F Keyboard Interrupt Enable Register

The port-F keyboard interrupt enable register enables or disables each port-F pin to operate as a keyboard interrupt pin.

Address: $0041

	Bit 7	6	5	4	3	2	1	Bit 0
Read: Write:	KBFIE7	KBFIE6	KBFIE5	KBFIE4	KBFIE3	KBFIE2	KBFIE1	KBFIE0
Reset:	0	0	0	0	0	0	0	0

Figure 15-10. Port-F Keyboard Interrupt Enable Register (KBFIER)

KBFIE7–KBFIE0 — Port-F Keyboard Interrupt Enable Bits

Each of these read/write bits enables the corresponding keyboard interrupt pin on port-F to latch interrupt requests. Reset clears the keyboard interrupt enable register.

1 = KBFx pin enabled as keyboard interrupt pin
0 = KBFx pin not enabled as keyboard interrupt pin

15.5.3.3 Port-F Pull-up Enable Register

The pull-up enable register enables or disables the pull-up device for port F.

Address: $0042

	Bit 7	6	5	4	3	2	1	Bit 0
Read: Write:	PFPE7	PFPE6	PFPE5	PFPE4	PFPE3	PFPE2	PFPE1	PFPE0
Reset:	1	1	1	1	1	1	1	1

Figure 15-11. Port F Pull-up Enable Register (PFPER)

PFPE7–PFPE0 — Port F pull-up enable bits

These read/write bits enable/disable the pull-up device. Reset sets DDRF7–DDRF0 to ‘1’s, enabling all port F pull-up devices.

1 = Corresponding port F pin pull-up device enabled
0 = Corresponding port F pin pull-up device disabled

15.6 Wait Mode

The keyboard modules remain active in wait mode. Clearing the IMASKx bit in the keyboard status and control register enables keyboard interrupt requests to bring the MCU out of wait mode.

15.7 Stop Mode

The keyboard modules remain active in stop mode. Clearing the IMASKx bit in the keyboard status and control register enables keyboard interrupt requests to bring the MCU out of stop mode.

15.8 Keyboard Module During Break Interrupts

The system integration module (SIM) controls whether the keyboard interrupt latch cam be cleared during the break state. The BCFE bit in the break flag control register (BFCR) enables software to clear status bits during the break state.

To allow software to clear the keyboard interrupt latch during a break interrupt, write a logic 1 to the BCFE bit. If a latch is cleared during the break state, it remains cleared when the MCU exits the break state.

To protect the latch during the break state, write a logic 0 to the BCFE bit. With BCFE at logic 0 (its default state), writing to the keyboard acknowledge bit (ACKx) in the keyboard status and control register during the break state has no effect.

Chapter 16
Break Module (BRK)

16.1 Introduction

This section describes the break module. The break module can generate a break interrupt that stops normal program flow at a defined address to enter a background program.

16.2 Features

Features of the break module include the following:

- Accessible I/O Registers during the Break Interrupt
- CPU-Generated Break Interrupts
- Software-Generated Break Interrupts
- COP Disabling during Break Interrupts

16.3 Functional Description

When the internal address bus matches the value written in the break address registers, the break module issues a breakpoint signal ($\overline{\text{BKPT}}$) to the SIM. The SIM then causes the CPU to load the instruction register with a software interrupt instruction (SWI) after completion of the current CPU instruction. The program counter vectors to $FFFC and $FFFD ($FEFC and $FEFD in monitor mode).

The following events can cause a break interrupt to occur:

- A CPU-generated address (the address in the program counter) matches the contents of the break address registers.
- Software writes a logic one to the BRKA bit in the break status and control register.

When a CPU generated address matches the contents of the break address registers, the break interrupt begins after the CPU completes its current instruction. A return from interrupt instruction (RTI) in the break routine ends the break interrupt and returns the MCU to normal operation. Figure 16-1 shows the structure of the break module.

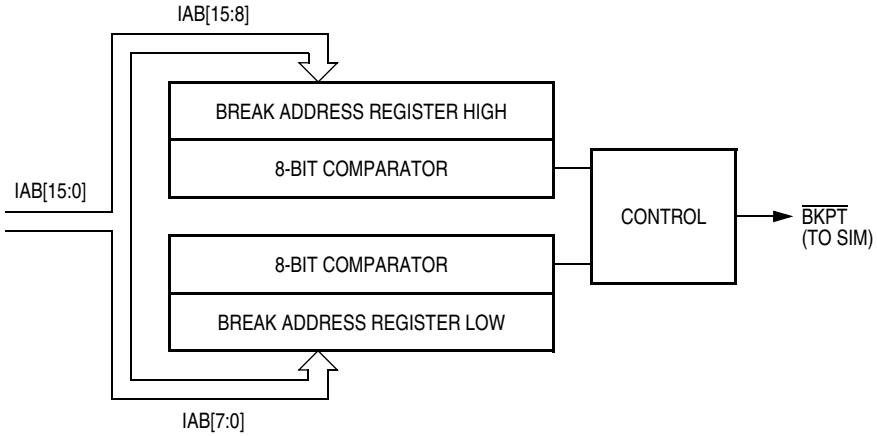

Figure 16-1. Break Module Block Diagram

Addr.	Register Name		Bit 7	6	5	4	3	2	1	Bit 0
$FE0C	Break Address Register High (BRKH)	Read: Write:	Bit15	Bit14	Bit13	Bit12	Bit11	Bit10	Bit9	Bit8
		Reset:	0	0	0	0	0	0	0	0
$FE0D	Break Address Register Low (BRKL)	Read: Write:	Bit7	Bit6	Bit5	Bit4	Bit3	Bit2	Bit1	Bit0
		Reset:	0	0	0	0	0	0	0	0
$FE0E	Break Status/Control Register (BRKSCR)	Read:	BRKE	BRKA	0	0	0	0	0	0
		Write:								
		Reset:	0	0	0	0	0	0	0	0

= Unimplemented

Figure 16-2. BRK I/O Register Summary

16.3.1 Flag Protection During Break Interrupts

The system integration module (SIM) controls whether or not module status bits can be cleared during the break state. The BCFE bit in the break flag control register (BFCR) enables software to clear status bits during the break state. (See 7.7.3 Break Flag Control Register (BFCR) and see the **Break Interrupts** subsection for each module.)

16.3.2 CPU During Break Interrupts

The CPU starts a break interrupt by:

- Loading the instruction register with the SWI instruction
- Loading the program counter with $FFFC:$FFFD ($FEFC:$FEFD in monitor mode)

The break interrupt begins after completion of the CPU instruction in progress. If the break address register match occurs on the last cycle of a CPU instruction, the break interrupt begins immediately.

16.3.3 TIM During Break Interrupts

A break interrupt stops the timer counter.

16.3.4 COP During Break Interrupts

The COP is disabled during a break interrupt when $V_{DD} + V_{HI}$ is present on the $\overline{RST}$ pin.

16.4 Break Module Registers

Three registers control and monitor operation of the break module:

- Break status and control register (BRKSCR)
- Break address register high (BRKH)
- Break address register low (BRKL)

16.4.1 Break Status and Control Register (BRKSCR)

The break status and control register contains break module enable and status bits.

Address: $FE0E

	Bit 7	6	5	4	3	2	1	Bit 0
Read:	BRKE	BRKA	0	0	0	0	0	0
Write:								
Reset:	0	0	0	0	0	0	0	0

= Unimplemented

Figure 16-3. Break Status and Control Register (BRKSCR)

BRKE — Break Enable Bit

This read/write bit enables breaks on break address register matches. Clear BRKE by writing a logic zero to bit 7. Reset clears the BRKE bit.

1 = Breaks enabled on 16-bit address match
0 = Breaks disabled

BRKA — Break Active Bit

This read/write status and control bit is set when a break address match occurs. Writing a logic one to BRKA generates a break interrupt. Clear BRKA by writing a logic zero to it before exiting the break routine. Reset clears the BRKA bit.

1 = Break address match
0 = No break address match

16.4.2 Break Address Registers (BRKH and BRKL)

The break address registers contain the high and low bytes of the desired breakpoint address. Reset clears the break address registers.

Address: $FE0C

	Bit 7	6	5	4	3	2	1	Bit 0
Read: Write:	Bit15	Bit14	Bit13	Bit12	Bit11	Bit10	Bit9	Bit8
Reset:	0	0	0	0	0	0	0	0

Address: $FE0D

	Bit 7	6	5	4	3	2	1	Bit 0
Read: Write:	Bit7	Bit6	Bit5	Bit4	Bit3	Bit2	Bit1	Bit0
Reset:	0	0	0	0	0	0	0	0

Figure 16-4. Break Address Registers (BRKH and BRKL)

16.5 Low-Power Modes

The WAIT and STOP instructions put the MCU in low-power-consumption standby modes.

16.5.1 Wait Mode

If enabled, the break module is active in wait mode. In the break routine, the user can subtract one from the return address on the stack if SBSW is set (see 7.6 Low-Power Modes). Clear the SBSW bit by writing logic zero to it.

16.5.2 Stop Mode

A break interrupt causes exit from stop mode and sets the SBSW bit in the break status register. See 7.7 SIM Registers.

Chapter 17
Electrical Specifications

17.1 Introduction

This section contains electrical and timing specifications.

17.2 Absolute Maximum Ratings

Maximum ratings are the extreme limits to which the microcontroller unit (MCU) can be exposed without permanently damaging it.

NOTE

This device is not guaranteed to operate properly at the maximum ratings. Refer to 17.5 DC Electrical Characteristics for guaranteed operating conditions.

Characteristic[1]	Symbol	Value	Unit
Supply Voltage	V_{DD}	–0.3 to +6.0	V
Input Voltage (except USB port pins)	V_{IN}	V_{SS}–0.3 to V_{DD}+0.3	V
Programming Voltage	V_{PP}	V_{SS}–0.3 to 14.0	V
USB Port Pins	V_{USB}	–1 to 4.6	V
Maximum Current Per Pin Excluding V_{DD} and V_{SS}	I	±25	mA
Storage Temperature	T_{STG}	–55 to +150	°C
Maximum Current Out of V_{SS}	I_{MVSS}	100	mA
Maximum Current Into V_{DD}	I_{MVDD}	100	mA

1. Voltages referenced to V_{SS}.

NOTE

This device contains circuitry to protect the inputs against damage due to high static voltages or electric fields; however, it is advised that normal precautions be taken to avoid application of any voltage higher than maximum-rated voltages to this high-impedance circuit. For proper operation, it is recommended that V_{IN} and V_{OUT} be constrained to the range $V_{SS} \leq (V_{IN}$ or $V_{OUT}) \leq V_{DD}$. Reliability of operation is enhanced if unused inputs are connected to an appropriate logic voltage level (for example, either V_{SS} or V_{DD}.)

17.3 Functional Operating Range

Characteristic	Symbol	Value	Unit
Operating Temperature Range	T_A	0 to 85	°C
Operating Voltage Range	V_{DD}	4.0 to 5.5	V

17.4 Thermal Characteristics

Characteristic	Symbol	Value	Unit
Thermal Resistance QFP (64 Pins)	θ_{JA}	70	°C/W
I/O Pin Power Dissipation	$P_{I/O}$	User Determined	W
Power Dissipation(1)	P_D	$P_D = (I_{DD} \times V_{DD}) + P_{I/O} = K/(T_J + 273\ °C)$	W
Constant(2)	K	$P_D \times (T_A + 273\ °C) + P_D^2 \times \theta_{JA}$	W/°C
Average Junction Temperature	T_J	$T_A + (P_D \times \theta_{JA})$	°C
Maximum Junction Temperature	T_{JM}	100	°C

NOTES
1. Power dissipation is a function of temperature.
2. K is a constant unique to the device. K can be determined for a known T_A and measured P_D. With this value of K, P_D and T_J can be determined for any value of T_A.

17.5 DC Electrical Characteristics

Characteristic	Symbol	Min	Typ(2)	Max	Unit
USB Regulator Output Voltage	V_{regout}	3.0	3.3	3.6	
Output High Voltage, (I_{LOAD} = −2.0mA) All I/O Pins	V_{OH}	V_{DD} – 0.8	—	—	V
Output Low Voltage, (I_{LOAD} = 1.6mA) All I/O Pins	V_{OL}	—	—	0.4	V
Input High Voltage All ports, $\overline{IRQ1}$, $\overline{RST}$, OSC1	V_{IH}	0.7 × V_{DD}	—	V_{DD}	V
Input Low Voltage All ports, $\overline{IRQ1}$, $\overline{RST}$, OSC1	V_{IL}	V_{SS}	—	0.3 × V_{DD}	V
Output High Current (V_{OH} = 2.1V) Port C in LDD mode	I_{OH}	3	4.5	6	mA
Output Low Current (V_{OL} = 2.3V) Port C in LDD mode	I_{OL}	10	15	20	mA
V_{DD} Supply Current Run, USB active, PLL on, f_{OP} = 6.0MHz(3) Run, USB suspended, PLL off, f_{OP} = 1.5MHz(3) Wait (4) Stop(5) 0°C to 85°C	I_{DD}	 — — — —	 — — — —	 34 18 6 350	 mA mA mA µA
I/O Ports Hi-Z Leakage Current	I_{IL}	—	—	±10	µA
Input Current	I_{IN}	—	—	±1	µA
Capacitance Ports (as Input or Output)	C_{OUT} C_{IN}	— —	— —	12 8	pF
POR ReArm Voltage(6)	V_{POR}	0	—	100	mV
POR Rise Time Ramp Rate(7)	R_{POR}	0.035	—	—	V/ms
Monitor Mode Entry Voltage	V_{DD}+V_{HI}	1.5 × V_{DD}		9	V
Pullup resistor PA0-PA7, PB0-PB7, PC0-PC4, PD0-PD7, PE0-PE3, PF0-PF7, $\overline{RST}$, $\overline{IRQ1}$	R_{PU}	20	35	50	kΩ
Schmitt Trigger Input High Level PD0-PD7, PE0-PE3, PF0-PF7	V_{SHI}	2.8		3.4	V
Schmitt Trigger Input Low Level PD0-PD7, PE0-PE3, PF0-PF7	V_{SHL}	1.7		2.3	V

NOTES:
1. V_{DD} = 4.0 to 5.5 Vdc, V_{SS} = 0 Vdc, T_A = T_L to T_H, unless otherwise noted.
2. Typical values reflect average measurements at midpoint of voltage range, 25 °C only.
3. Run (operating) I_{DD} measured using external square wave clock source. All inputs 0.2 V from rail. No dc loads. Less than 100 pF on all outputs. C_L = 20 pF on OSC2. All ports configured as outputs. OSC2 capacitance linearly affects run I_{DD}. Measured with all modules enabled.
4. Wait I_{DD} measured using external square wave clock source ($f_{CGMXCLK}$ = 6 MHz); all inputs 0.2 V from rail; no dc loads; less than 100 pF on all outputs. C_L = 20 pF on OSC2; USB in suspend mode, 15 KΩ ± 5% termination resistors on D+ and D– pins; all ports configured as inputs; OSC2 capacitance linearly affects wait I_{DD}.
5. STOP I_{DD} measured with USB in suspend mode, OSC1 grounded, 1.425 KΩ ± 1% pull-up resistor on D+ pin and 15 KΩ ± 1% pull-down resistors on D+ and D– pins, no port pins sourcing current.
6. Maximum is highest voltage that POR is guaranteed.
7. If minimum V_{DD} is not reached before the internal POR reset is released, $\overline{RST}$ must be driven low externally until minimum V_{DD} is reached.
8. R_{PU} is measured at V_{DD} = 5.0V.

17.6 Control Timing

Characteristic	Symbol	Min	Max	Unit
Internal Operating Frequency[2]	f_{OP}	—	6	MHz
$\overline{RST}$ Input Pulse Width Low[3]	t_{IRL}	50	—	ns

NOTES:
1. V_{DD} = 4.0 to 5.5 Vdc, V_{SS} = 0 Vdc; timing shown with respect to 20% V_{DD} and 70% V_{DD}, unless otherwise noted.
2. Some modules may require a minimum frequency greater than dc for proper operation; see appropriate table for this information.
3. Minimum pulse width reset is guaranteed to be recognized. It is possible for a smaller pulse width to cause a reset.

17.7 Oscillator Characteristics

Characteristic	Symbol	Min	Typ	Max	Unit
Crystal Frequency[1]	$f_{CGMXCLK}$	—	6	—	MHz
External Clock Reference Frequency[1], [2]	$f_{CGMXCLK}$	dc	—	24	MHz
Crystal Load Capacitance[3]	C_L	—	—	—	
Crystal Fixed Capacitance[3]	C_1	—	$2 \times C_L$	—	
Crystal Tuning Capacitance[3]	C_2	—	$2 \times C_L$	—	
Feedback Bias Resistor	R_B	—	10	—	MΩ
Series Resistor[3], [4]	R_S	—	—	—	

NOTES:
1. The USB module is designed to function at $f_{CGMXCLK}$ = 6MHz and CGMVCLK = 48MHz. The values given here are oscillator specifications.
2. No more than 10% duty cycle deviation from 50%
3. Consult crystal vendor data sheet
4. Not Required for high frequency crystals

17.8 TImer Interface Module Characteristics

Characteristic	Symbol	Min	Max	Unit
Input Capture Pulse Width	t_{TIH}, t_{TIL}	125	—	ns
Input Clock Pulse Width	t_{TCH}, t_{TCL}	$(1/f_{OP}) + 5$	—	ns

17.9 Clock Generation Module Characteristics

17.9.1 CGM Component Specifications

Characteristic	Symbol	Min	Typ	Max	Unit
Crystal reference frequency(1)	f_{XCLK}		6		MHz
Crystal load capacitance(2)	C_L	—	—	—	pF
Crystal fixed capacitance(2)	C_1		20		pF
Crystal tuning capacitance(2)	C_2		20		pF
Feedback bias resistor	R_B		10		MΩ
Series resistor	R_S		0		kΩ

NOTES:
1. Fundamental mode crystals only
2. Consult crystal manufacturer's data.

17.9.2 CGM Electrical Specifications

Description	Symbol	Min	Typ	Max	Unit
Operating voltage	V_{DD}	4.0	—	5.5	V
Operating temperature	T	0	25	70	°C
Crystal reference frequency	f_{RCLK}		6		MHz
VCO center-of-range frequency	f_{VRS}		48		MHz
VCO multiply factor	N	1	—	4095	
VCO prescale multiplier	2^P	1	1	8	
Reference divider factor	R	1	1	15	
VCO operating frequency	f_{VCLK}	40	—	56	MHz

17.9.3 Acquisition/Lock Time Specifications

Description	Symbol	Min	Typ	Max	Notes
Filter Capacitor Multiply Factor	C_{FACT}	—	0.0145	—	F/s V
Acquisition Mode Time Factor	K_{ACQ}	—	0.117	—	V
Tracking Mode Time Factor	K_{TRK}	—	0.021	—	V
Manual Mode Time to Stable	t_{ACQ}	—	$\frac{8 \times V_{DDA}}{f_{RDV} \times K_{ACQ}}$	—	If C_F chosen correctly
Manual Stable to Lock Time	t_{AL}	—	$\frac{4 \times V_{DDA}}{f_{RDV} \times K_{TRX}}$	—	If C_F chosen correctly
Manual Acquisition Time	t_{LOCK}	—	$t_{ACQ} + t_{AL}$	—	
Tracking Mode Entry Frequency Tolerance	Δ_{TRK}	0	—	± 3.6%	
Acquisition Mode Entry Frequency Tolerance	Δ_{ACQ}	± 6.3%	—	± 7.2%	
LOCK Entry Frequency Tolerance	Δ_{LOCK}	0	—	± 0.9%	
LOCK Exit Frequency Tolerance	Δ_{UNL}	± 0.9%	—	± 1.8%	
Reference Cycles Per Acquisition Mode Measurement	n_{ACQ}		32	—	
Reference Cycles Per Tracking Mode Measurement	n_{TRK}		128	—	
Automatic Mode Time to Stable	t_{ACQ}	n_{ACQ}/f_{RDV}	$\frac{8 \times V_{DDA}}{f_{RDV} \times K_{ACQ}}$	—	If C_F chosen correctly
Automatic Stable to Lock Time	t_{AL}	n_{TRK}/f_{RDV}	$\frac{4 \times V_{DDA}}{f_{RDV} \times K_{TRX}}$	—	If C_F chosen correctly
Automatic Lock Time	t_{LOCK}	—	$t_{ACQ} + t_{AL}$	—	

Chapter 18
Mechanical Specifications

18.1 Introduction

This section gives the dimensions for:

- 64-pin plastic quad flat pack (case no. 840C)
- 52-pin low-profile quad flat pack (case no. 848D)

18.2 64-Pin Quad Flat Pack (QFP)

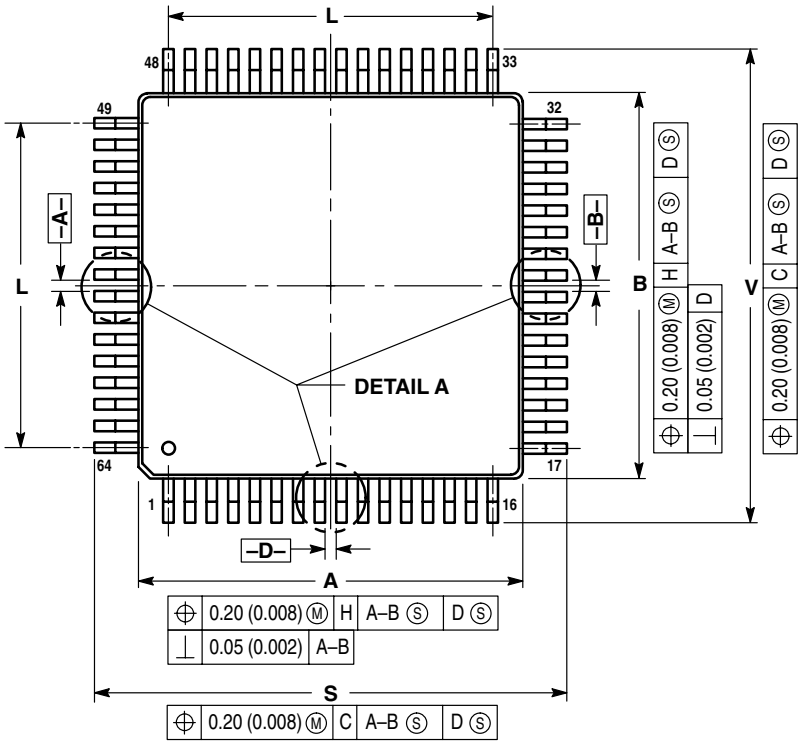

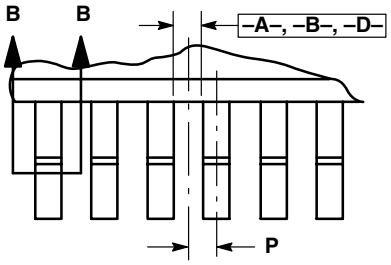

DETAIL A

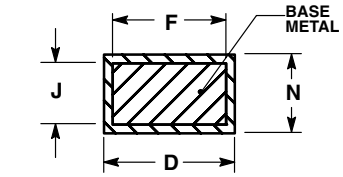

0.20 (0.008) M C A–B S D S

SECTION B–B

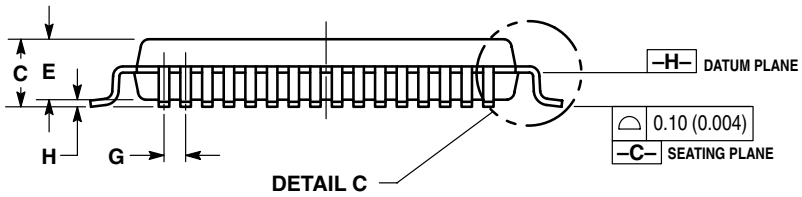

DETAIL C

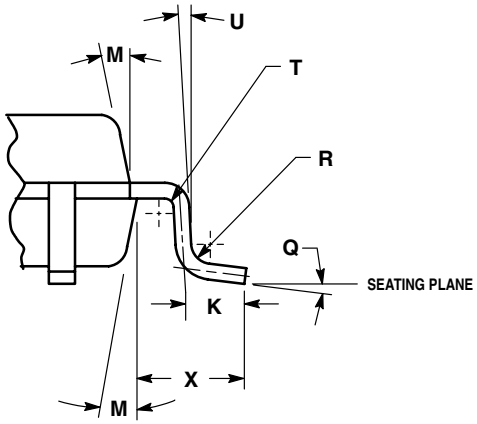

DETAIL C

NOTES:
1. DIMENSIONING AND TOLERANCING PER ANSI Y14.5M, 1982.
2. CONTROLLING DIMENSION: MILLIMETER.
3. DATUM PLANE –H– IS LOCATED AT BOTTOM OF LEAD AND IS COINCIDENT WITH THE LEAD WHERE THE LEAD EXITS THE PLASTIC BODY AT THE BOTTOM OF THE PARTING LINE.
4. DATUMS A–B AND –D– TO BE DETERMINED AT DATUM PLANE –H–.
5. DIMENSIONS S AND V TO BE DETERMINED AT SEATING PLANE –C–.
6. DIMENSIONS A AND B DO NOT INCLUDE MOLD PROTRUSION. ALLOWABLE PROTRUSION IS 0.25 (0.010) PER SIDE. DIMENSIONS A AND B DO INCLUDE MOLD MISMATCH AND ARE DETERMINED AT DATUM PLANE –H–.
7. DIMENSION D DOES NOT INCLUDE DAMBAR PROTRUSION. DAMBAR PROTRUSION SHALL NOT CAUSE THE D DIMENSION TO EXCEED 0.53 (0.021). DAMBAR CANNOT BE LOCATED ON THE LOWER RADIUS OR THE FOOT.
8. DIMENSION K IS TO BE MEASURED FROM THE THEORETICAL INTERSECTION OF LEAD FOOT AND LEG CENTERLINES.

	MILLIMETERS		INCHES	
DIM	MIN	MAX	MIN	MAX
A	13.90	14.10	0.547	0.555
B	13.90	14.10	0.547	0.555
C	2.07	2.46	0.081	0.097
D	0.30	0.45	0.012	0.018
E	2.00	2.40	0.079	0.094
F	0.30	—	0.012	—
G	0.80 BSC		0.031 BSC	
H	0.067	0.250	0.003	0.010
J	0.130	0.230	0.005	0.090
K	0.500	0.660	0.020	0.026
L	12.00 REF		0.472 REF	
M	5°	10°	5°	10°
N	0.130	0.170	0.005	0.007
P	0.40 BSC		0.016 BSC	
Q	2°	8°	2°	8°
R	0.13	0.30	0.005	0.012
S	16.20	16.60	0.638	0.654
T	0.20 REF		0.008 REF	
U	0°	—	0°	—
V	16.20	16.60	0.638	0.654
X	1.10	1.30	0.043	0.051

Figure 18-1. 64-Pin Quad-Flat-Pack (Case No. 840C)

18.3 52-Pin Low-Profile Quad Flat Pack (LQFP)

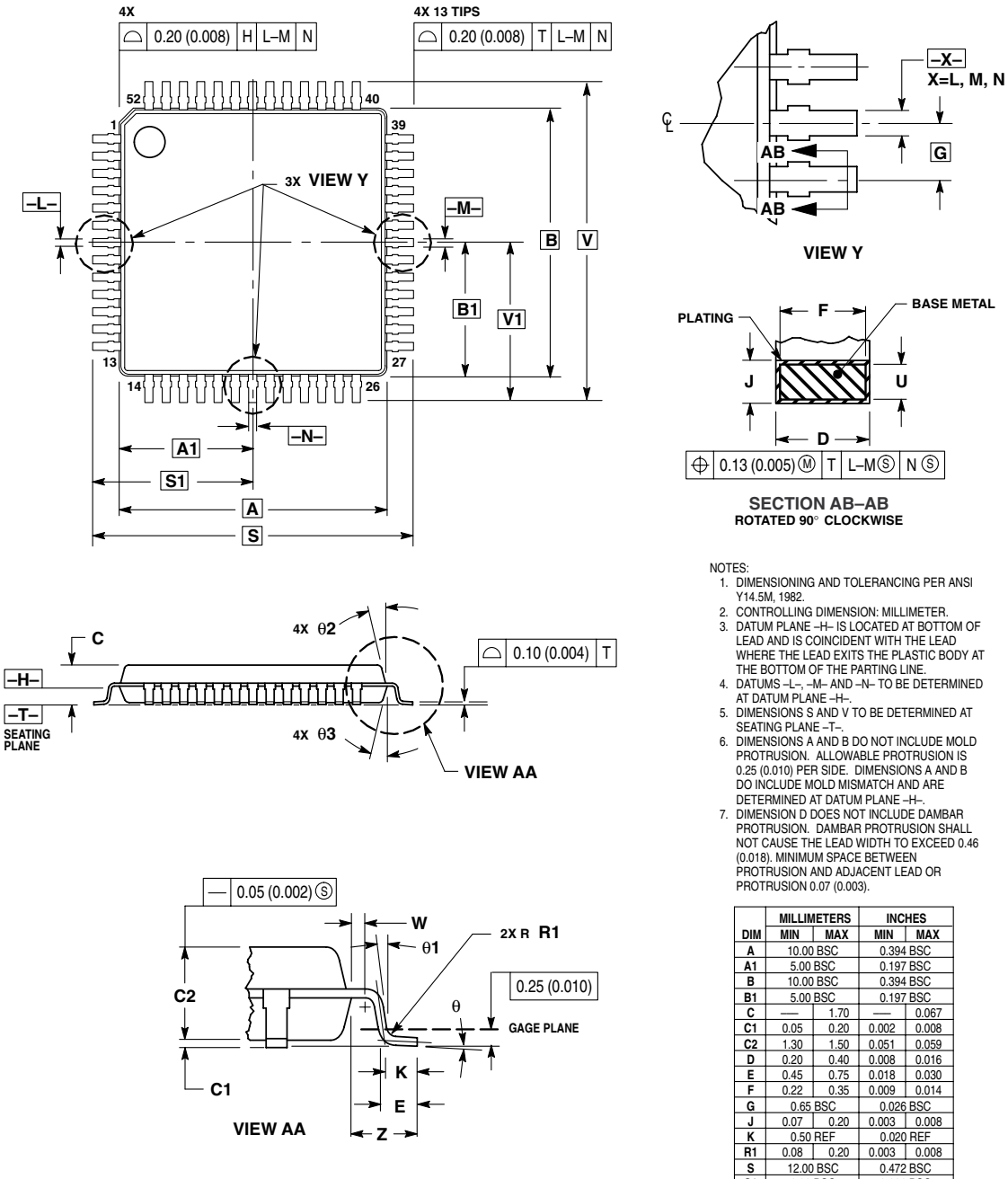

NOTES:
1. DIMENSIONING AND TOLERANCING PER ANSI Y14.5M, 1982.
2. CONTROLLING DIMENSION: MILLIMETER.
3. DATUM PLANE –H– IS LOCATED AT BOTTOM OF LEAD AND IS COINCIDENT WITH THE LEAD WHERE THE LEAD EXITS THE PLASTIC BODY AT THE BOTTOM OF THE PARTING LINE.
4. DATUMS –L–, –M– AND –N– TO BE DETERMINED AT DATUM PLANE –H–.
5. DIMENSIONS S AND V TO BE DETERMINED AT SEATING PLANE –T–.
6. DIMENSIONS A AND B DO NOT INCLUDE MOLD PROTRUSION. ALLOWABLE PROTRUSION IS 0.25 (0.010) PER SIDE. DIMENSIONS A AND B DO INCLUDE MOLD MISMATCH AND ARE DETERMINED AT DATUM PLANE –H–.
7. DIMENSION D DOES NOT INCLUDE DAMBAR PROTRUSION. DAMBAR PROTRUSION SHALL NOT CAUSE THE LEAD WIDTH TO EXCEED 0.46 (0.018). MINIMUM SPACE BETWEEN PROTRUSION AND ADJACENT LEAD OR PROTRUSION 0.07 (0.003).

DIM	MILLIMETERS		INCHES	
	MIN	MAX	MIN	MAX
A	10.00 BSC		0.394 BSC	
A1	5.00 BSC		0.197 BSC	
B	10.00 BSC		0.394 BSC	
B1	5.00 BSC		0.197 BSC	
C	—	1.70	—	0.067
C1	0.05	0.20	0.002	0.008
C2	1.30	1.50	0.051	0.059
D	0.20	0.40	0.008	0.016
E	0.45	0.75	0.018	0.030
F	0.22	0.35	0.009	0.014
G	0.65 BSC		0.026 BSC	
J	0.07	0.20	0.003	0.008
K	0.50 REF		0.020 REF	
R1	0.08	0.20	0.003	0.008
S	12.00 BSC		0.472 BSC	
S1	6.00 BSC		0.236 BSC	
U	0.09	0.16	0.004	0.006
V	12.00 BSC		0.472 BSC	
V1	6.00 BSC		0.236 BSC	
W	0.20 REF		0.008 REF	
Z	1.00 REF		0.039 REF	
θ	0°	7°	0°	7°
θ1	0°	—	0°	—
θ2	12°	REF	12°	REF
θ3	12°	REF	12°	REF

Figure 18-2. 52-Pin Low-Profile Quad Flat Pack (Case No. 848D)

How to Reach Us:

Home Page:
www.freescale.com

E-mail:
support@freescale.com

USA/Europe or Locations Not Listed:
Freescale Semiconductor
Technical Information Center, CH370
1300 N. Alma School Road
Chandler, Arizona 85224
+1-800-521-6274 or +1-480-768-2130
support@freescale.com

Europe, Middle East, and Africa:
Freescale Halbleiter Deutschland GmbH
Technical Information Center
Schatzbogen 7
81829 Muenchen, Germany
+44 1296 380 456 (English)
+46 8 52200080 (English)
+49 89 92103 559 (German)
+33 1 69 35 48 48 (French)
support@freescale.com

Japan:
Freescale Semiconductor Japan Ltd.
Headquarters
ARCO Tower 15F
1-8-1, Shimo-Meguro, Meguro-ku,
Tokyo 153-0064
Japan
0120 191014 or +81 3 5437 9125
support.japan@freescale.com

Asia/Pacific:
Freescale Semiconductor Hong Kong Ltd.
Technical Information Center
2 Dai King Street
Tai Po Industrial Estate
Tai Po, N.T., Hong Kong
+800 2666 8080
support.asia@freescale.com

For Literature Requests Only:
Freescale Semiconductor Literature Distribution Center
P.O. Box 5405
Denver, Colorado 80217
1-800-441-2447 or 303-675-2140
Fax: 303-675-2150
LDCForFreescaleSemiconductor@hibbertgroup.com

RoHS-compliant and/or Pb- free versions of Freescale products have the functionality and electrical characteristics of their non-RoHS-compliant and/or non-Pb- free counterparts. For further information, see http://www.freescale.com or contact your Freescale sales representative.

For information on Freescale.s Environmental Products program, go to http://www.freescale.com/epp.

Information in this document is provided solely to enable system and software implementers to use Freescale Semiconductor products. There are no express or implied copyright licenses granted hereunder to design or fabricate any integrated circuits or integrated circuits based on the information in this document.

Freescale Semiconductor reserves the right to make changes without further notice to any products herein. Freescale Semiconductor makes no warranty, representation or guarantee regarding the suitability of its products for any particular purpose, nor does Freescale Semiconductor assume any liability arising out of the application or use of any product or circuit, and specifically disclaims any and all liability, including without limitation consequential or incidental damages. “Typical” parameters that may be provided in Freescale Semiconductor data sheets and/or specifications can and do vary in different applications and actual performance may vary over time. All operating parameters, including “Typicals”, must be validated for each customer application by customer’s technical experts. Freescale Semiconductor does not convey any license under its patent rights nor the rights of others. Freescale Semiconductor products are not designed, intended, or authorized for use as components in systems intended for surgical implant into the body, or other applications intended to support or sustain life, or for any other application in which the failure of the Freescale Semiconductor product could create a situation where personal injury or death may occur. Should Buyer purchase or use Freescale Semiconductor products for any such unintended or unauthorized application, Buyer shall indemnify and hold Freescale Semiconductor and its officers, employees, subsidiaries, affiliates, and distributors harmless against all claims, costs, damages, and expenses, and reasonable attorney fees arising out of, directly or indirectly, any claim of personal injury or death associated with such unintended or unauthorized use, even if such claim alleges that Freescale Semiconductor was negligent regarding the design or manufacture of the part.

Freescale™ and the Freescale logo are trademarks of Freescale Semiconductor, Inc. All other product or service names are the property of their respective owners.

© Freescale Semiconductor, Inc. 2004. All rights reserved.

MC68HC08KH12A
Rev. 1.1, 09/2005

Общество с ограниченной ответственностью «МосЧип» ИНН 7719860671 / КПП 771901001
Адрес: 105318, г.Москва, ул.Щербаковская д.3, офис 1107

Данный компонент на территории Российской Федерации

Вы можете приобрести в компании MosChip.

Для оперативного оформления запроса Вам необходимо перейти по данной ссылке:

http://moschip.ru/get-element

Вы можете разместить у нас заказ для любого Вашего проекта, будь то серийное производство или разработка единичного прибора.

В нашем ассортименте представлены ведущие мировые производители активных и пассивных электронных компонентов.

Нашей специализацией является поставка электронной компонентной базы двойного назначения, продукции таких производителей как XILINX, Intel (ex.ALTERA), Vicor, Microchip, Texas Instruments, Analog Devices, Mini-Circuits, Amphenol, Glenair.

Сотрудничество с глобальными дистрибьюторами электронных компонентов, предоставляет возможность заказывать и получать с международных складов практически любой перечень компонентов в оптимальные для Вас сроки.

На всех этапах разработки и производства наши партнеры могут получить квалифицированную поддержку опытных инженеров.

Система менеджмента качества компании отвечает требованиям в соответствии с ГОСТ Р ИСО 9001, ГОСТ РВ 0015-002 и ЭС РД 009

Офис по работе с юридическими лицами:

105318, г.Москва, ул.Щербаковская д.3, офис 1107, 1118, ДЦ «Щербаковский»

Телефон: +7 495 668-12-70 (многоканальный)

Факс: +7 495 668-12-70 (доб.304)

E-mail: info@moschip.ru

Skype отдела продаж:
moschip.ru
moschip.ru_4
moschip.ru_6
moschip.ru_9