Low Dropout Linear Regulator

FEATURES

- Low Dropout Voltage of 130mV at 100mA Output Current (AIC2951/2951D-50).
- Guaranteed 150mA /300mA Output Current.
- Internal 1.3Ω P-MOSFET Draws no Base Current.
- Low Ground Current at 55μA.
- 1% Accuracy Output of 3V/3.3V/5V.
- Error Flag Warns of Output Dropout.
- 1μA Supply Current in Shutdown Mode.
- Output Programmable from 1.235V~11V.
- Fast Transient Response.
- Needs only 1μF for Stability.
- Current and Thermal Limiting.

APPLICATIONS

- Voltage Regulator for Pentium® CPUs.
- Wireless Communication System.
- Battery Powered Systems.

DESCRIPTION

The AIC2951/ 2951D series is the enhanced CMOS version of the LP2951. The superior characteristics of the AIC2951/ 2951D series include zero base current loss, very low dropout voltage, and 1% accuracy output voltage. Typical ground current remains approximately 55μA, from no load to maximum loading conditions. Dropout voltage at 100mA output current is significantly lower than its bipolar counterpart: 130mV for the AIC2951-50/2951D-50, 180mV for the AIC2951-33/ 2951D-33, and 200mV for the AIC2951-30/ 2951D-30. Output current limiting and thermal limiting are built in to provide maximal protection to the AIC2951/2951D series from fault conditions.

An error flag output, indicating when output voltage drops out of regulation, often due to the falling batteries on the input, can be used for a power-on reset. A logic-controlled shutdown input enables the regulator to be switched on and off. The part may be configured for a fixed output voltage or programmed from 1.235V to 11V with an external pair of resistors. The part comes in 8-pin DIP or SO packages.

TYPICAL APPLICATION CIRCUIT

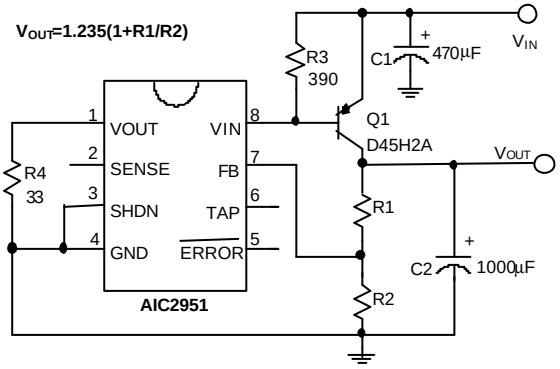

Pentium Processor Power Supply

ORDERING INFORMATION

AIC2951 X-XXXX

- PACKAGE TYPE
  N: PLASTIC DIP
  S: SMALL OUTLINE
- TEMPERATURE RANGE
  C: 0°C~+70°C
- OUTPUT VOLTAGE
  30 : 3.0V
  33 : 3.3V
  50 : 5.0V
- MAX. OUTPUT CURRENT
  DEFAULT : 150mA
  D : 300mA

ORDER NUMBER	PIN CONFIGURATION
AIC2951-30CN AIC2951-33CN AIC2951-50CN AIC2951D-30CN AIC2951D-33CN AIC2951D-50CN (PLASTIC DIP)	TOP VIEW 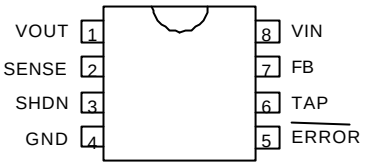
AIC2951-30CS AIC2951-33CS AIC2951-50CS AIC2951D-30CS AIC2951D-33CS AIC2951D-50CS (PLASTIC SO)	

ABSOLUTE MAXIMUM RATINGS

Input Supply Voltage ..... -0.3~12V

Feedback Input Voltage..... -0.3~12V

Shutdown Input Voltage ..... -0.3~12V

Error Comparator Output ..... -0.3~12V

Operating Junction Temperature Range ..... -40°C~125 °C

Storage Temperature Range ..... -65°C~150 °C

TEST CIRCUIT

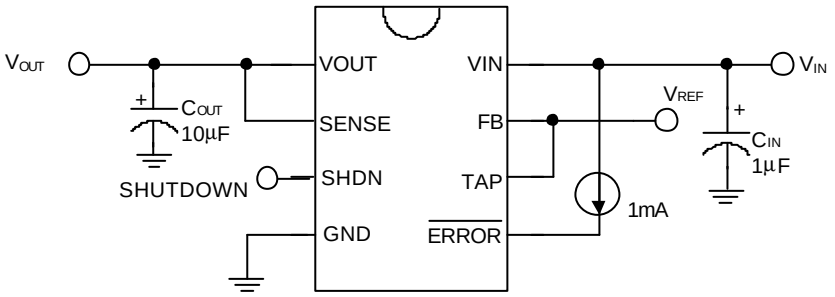

■ ELECTRICAL CHARACTERISTICS (Ta=25°C, C_{IN}=1mF, C_{OUT}=10mF, unless otherwise specified.)

PARAMETER	TEST CONDITIONS		MIN.	TYP.	MAX.	UNIT
Output Voltage	No Load					V
	AIC2951/2951D-50	V_{IN}=5.5~12V	4.950	5.0	5.050	
	AIC2951/2951D-33	V_{IN}=3.6~12V	3.267	3.3	3.333	
	AIC2951/2951D-30	V_{IN}=3.3~12V	2.970	3.0	3.030	
Output Voltage Temperature Coefficiency	(Note 1)			50	150	PPM/°C
Line Regulation	I_L=1mA					mV
	AIC2951/2951D-50	V_{IN}=5.5~12V		3	10	
	AIC2951/2951D-33	V_{IN}=3.6~12V		3	10	
	AIC2951/2951D-30	V_{IN}=3.3~12V		3	10	
Load Regulation (Note 2)	AIC2951-50	V_{IN}=7V, I_L=0.1~150mA		7	15	mV
	AIC2951D-50	V_{IN}=7V, I_L=0.1~300mA		7	25	
	AIC2951-30/ -33	V_{IN}=5V, I_L=0.1~150mA		7	15	
	AIC2951D-30/-33	V_{IN}=5V, I_L=0.1~300mA		7	25	
Current Limit (Note 3)	AIC2951-50	V_{IN}=7V, V_{OUT}=0V		220		MA
	AIC2951-30/ -33	V_{IN}=5V, V_{OUT}=0V		220		
	AIC2951D-50	V_{IN}=7V, V_{OUT}=0V		440		
	AIC2951D-30/ -33	V_{IN}=5V, V_{OUT}=0V		440		
Dropout Voltage (Note 4)	AIC2951/2951D	I_L=0.1mA		0.2	10	mV
	AIC2951-50	I_L=150mA		200	300	
	AIC2951-33	I_L=150mA		270	370	
	AIC2951-30	I_L=150mA		300	400	
	AIC2951D-50	I_L=300mA		400	500	
	AIC2951D-33	I_L=300mA		540	640	
	AIC2951D-30	I_L=300mA		600	700	
Ground Current	I_O=0.1mA~I_{MAX}					μA
	AIC2951/2951D-50	V_{IN}=5.5~12V		55	80	
	AIC2951/2951D-33	V_{IN}=4~12V		55	80	
	AIC2951/2951D-30	V_{IN}=4~12V		55	80	
FB Reference Voltage	AIC2951-50	V_{IN}=5.5~12V	1.222	1.235	1.248	V
	AIC2951-30/ -33	V_{IN}=3.6~12V	1.222	1.235	1.248	
Reference Voltage Temp. Coef. (Note 1)				50	150	PPM/°C
FB Pin Current	AIC2951/2951D	V_{IN}=7V		20	60	NA
Error Pin off Leakage Current	AIC2951/2951D	V_{IN}=7V			1	μA
Error Pin Pull Low Voltage	I_{OL}=1mA					mV
	AIC2951/2951D-50	V_{IN}=4.5V		100	300	
	AIC2951/2951D-33	V_{IN}=2.9V		100	300	

	AIC2951/2951D-30	V_{IN}=2.7V		100	300	

ELECTRICAL CHARACTERISTICS (CONTINUED)

PARAMETER	TEST CONDITIONS		MIN.	TYP.	MAX.	UNIT
Output Voltage	No Load					V
	AIC2951/2951D-50	V_{IN}=5.5~12V	4.950	5.0	5.050	
	AIC2951/2951D-33	V_{IN}=3.6~12V	3.267	3.3	3.333	
	AIC2951/2951D-30	V_{IN}=3.3~12V	2.970	3.0	3.030	
Error Pin Upper Threshold Voltage			40	60		mV
Error Pin Lower Threshold Voltage				68	88	MV
Shutdown Threshold Voltage	AIC2951/2951D	V_{IN}=7V	0.5	0.8	2	V
Shutdown Input Bias Current	AIC2951/2951D	V_{IN}=7V, V_{SHDN}=2V		10	25	μA
Shutdown Supply Current	AIC2951/2951D	V_{IN}=7V, V_{SHDN}=2V			2	μA

Note 1: Guaranteed by design.
Note 2: Regulation is measured at constant junction temperature, using pulse testing with a low ON time.
Note 3: Current limit is measured by pulsing a short time.
Note 4: Dropout voltage is defined as the input to output differential at which the output voltage drops 100mV below the value measured with a 1V differential.

TYPICAL PERFORMANCE CHARACTERISTICS

Reference Voltage vs Temperature

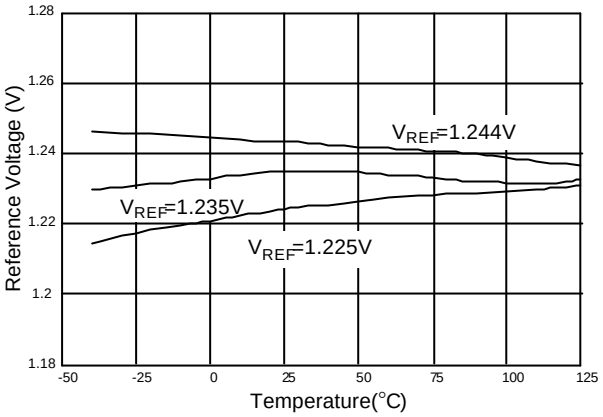

Ground Current vs. Input Voltage

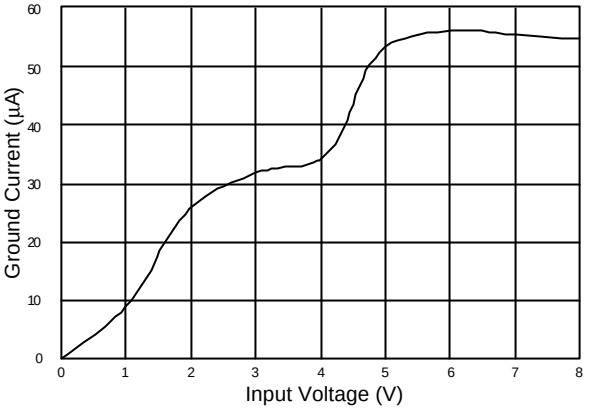

Ground Current vs. Temperature

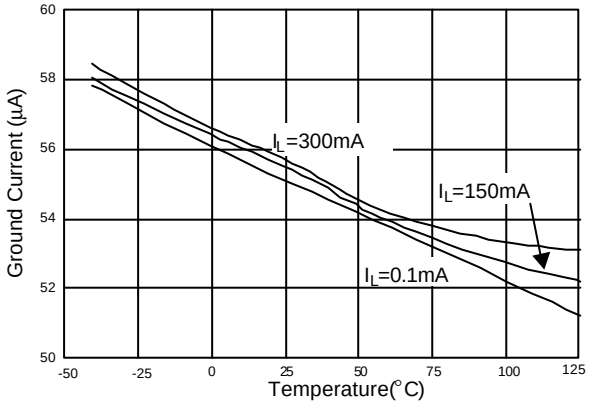

Dropout Voltage vs Load Current

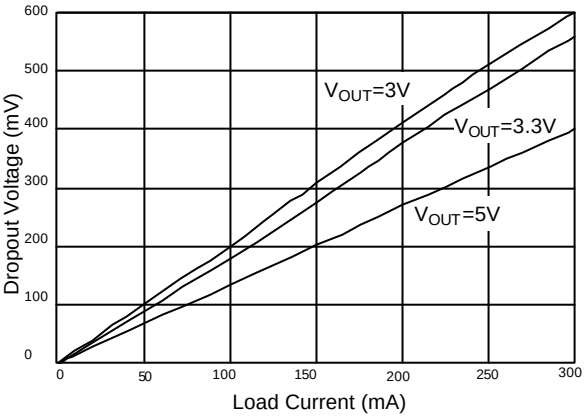

Dropout Voltage vs Temperature

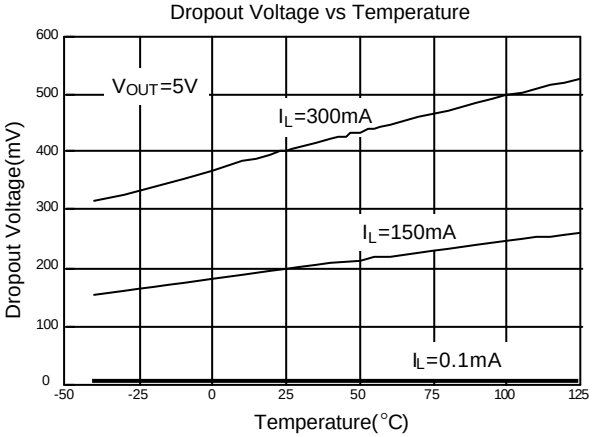

Short Circuit Current vs. Temperature

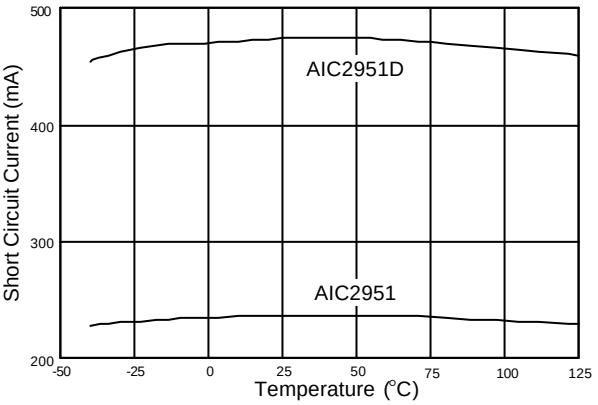

TYPICAL PERFORMANCE CHARACTERISTICS (CONTINUED)

Line Transient Response

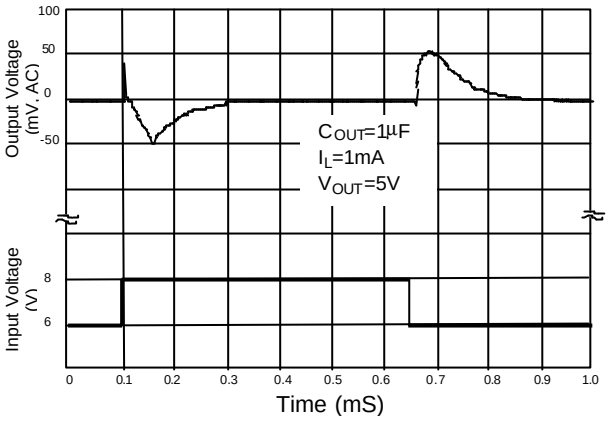

Load Transient Response

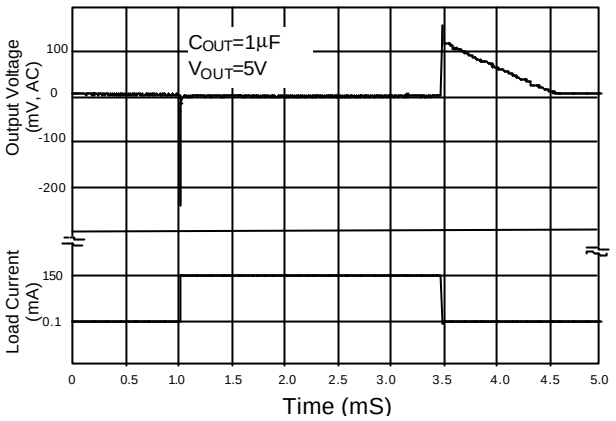

Load Transient Response

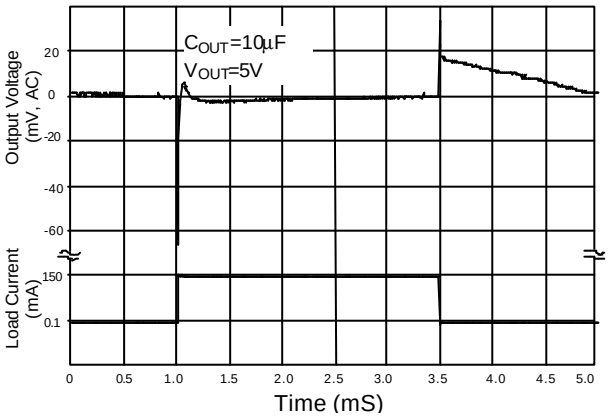

Enable Transient

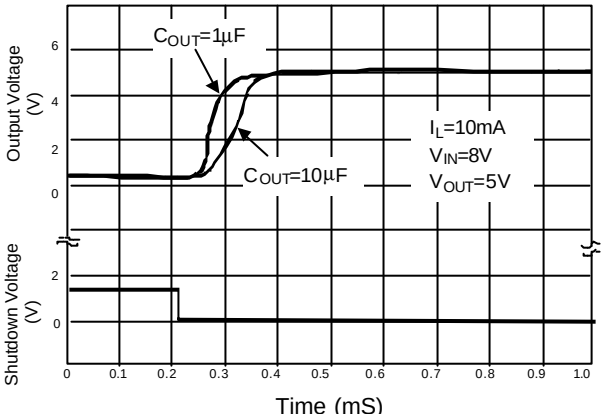

FB Pin Bias Current vs. Temperature

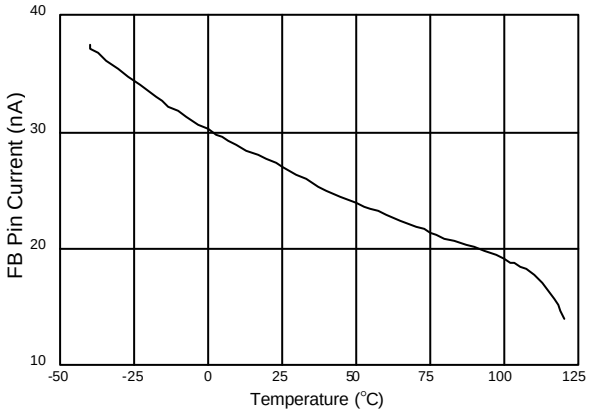

Minmum Operating Voltage vs Temperature

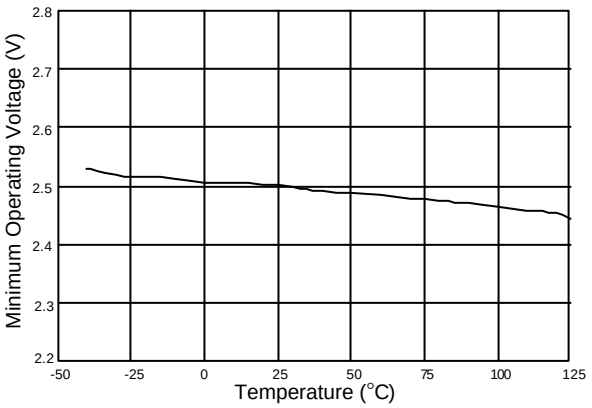

BLOCK DIAGRAM

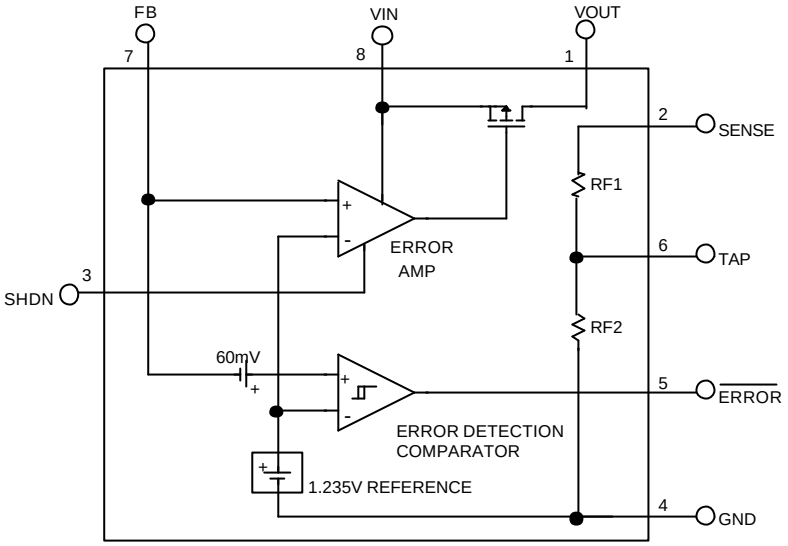

PIN DESCRIPTIONS

PIN 1: VOUT - Output pin.

PIN 2: SENSE -Remote sense input, connected to internal resistor divider.

PIN 3: SHDN - Shutdown input.

PIN 4: GND - Power GND.

PIN 5: $\overline{\text{ERROR}}$ - Open drain output of error flag warns.

PIN 6: TAP - Center output of internal resistor divider.

PIN 7: FB - Error amplifier positive feedback (see Block Diagram)

PIN 8: VIN - Power supply input

APPLICATION INFORMATIONS

Output Filter Capacitors

A 1µF (or greater) capacitor is required between the AIC2951/AIC2951D output and ground for stability. Without this capacitor the part will oscillate. Even though most types of capacitor may work, if Aluminum electrolytic type is used, the equivalent series resistance (ESR) should be held to 5Ω or less. Many Aluminum electrolytics have electrolytes that freeze at about -30°C, so solid tantalums are recommended for operation below -25°C. The value of this capacitor may be increased without limit.

The output capacitance required for stability varies with output voltage (smaller for higher output voltage) and output current (smaller for lower output currents). At the worst-case situation of a 150mA load at 1.235V output (output shorted to FB pin) a 3.3 µF or greater capacitor should be used.

A 0.1µF capacitor should be placed from the AIC2951/2951D input to ground if the lead inductance between the input and power source exceeds 500nH (approximately 10 inches of trace). Noise injection into the feedback terminal of the AIC2951/2951D from nearby noise sources can also upset the output. This may especially be a problem when using high value external resistors to set the output voltage. Adding a 100pF capacitor between output and feedback and increasing the output capacitor to at least 3.3µF will cure this problem.

Programming the Output Voltage

The AIC2951/2951D series can be set to deliver any output voltage from 1.235V to 11V by using an external voltage divider. In addition, internal voltage

dividers are provided for 3.0V/3.3V/5.0V output versions. To use the internal voltage divider, connect the SENSE pin to output and the TAP pin to the FB pin. When using an external divider the SENSE and TAP pins are left open, and the divider is installed from the output to ground, with its center connected to the FB pin (see Fig. 1). When using an external voltage divider, resistance can be calculated from the following formula:

$$V_{OUT} = V_{REF} \times (1 + \frac{R1}{R2}) + I_{FB} \times R1$$

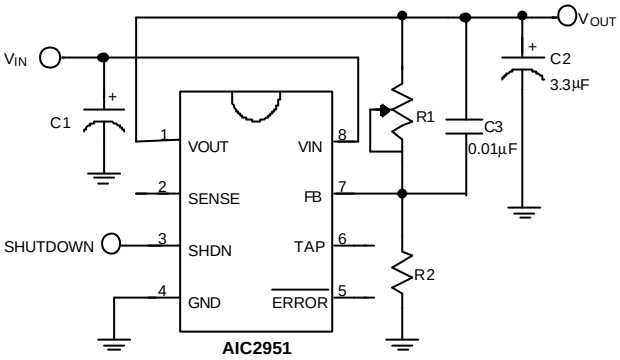

Fig. 1 Adjustable Regulator

Where V_{REF} is the nominal 1.235V reference voltage and I_{FB} is the feedback pin bias current, nominally -20nA. The minimum recommended load current of 1µA forces an upper limit of 1.2MΩ on the value of R2. Using a 1.2MΩ resistor for R2, the bias current will already cause a 2% shift in output voltage. For better accuracy, choosing R2=100KΩ reduces this error to 0.17% at the price of merely increasing the resistor programming current to 12µA.

Reducing Output Noise

In reference applications it may be advantageous to reduce the AC noise present at the output. One method is to reduce the regulator bandwidth by increasing the size of the output capacitor. Another, noise can be reduced by bypassing the upper resistor in the feedback divider with a small capacitor, since the capacitor provides a more direct path for AC feedback. The size of this capacitor can be calculated from the formula:

$$C_{BYPASS} \cong 1/(2\pi \times R1 \times f_{CORNER})$$

Where R_1 is the upper resistor of the feedback divider and f_{CORNOR} is the frequency above which the increased AC feedback is to become active. The reduction of the output noise at high frequency will be proportional to the ratio of the two resistors in the feedback divider, R2/(R1+R2). In order to maintain regulator stability when using a noise-reducing bypass capacitor, it will also be necessary to increase the size of the output filter capacitor by the same ratio.

APPLICATION EXAMPLES

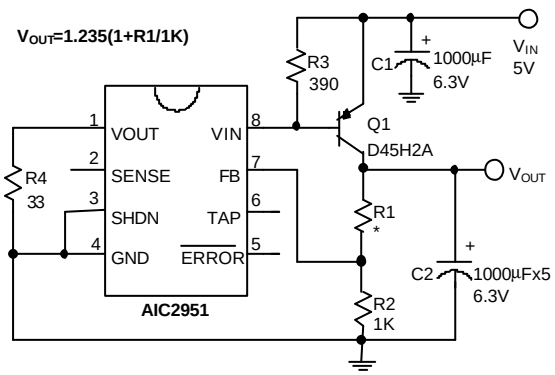

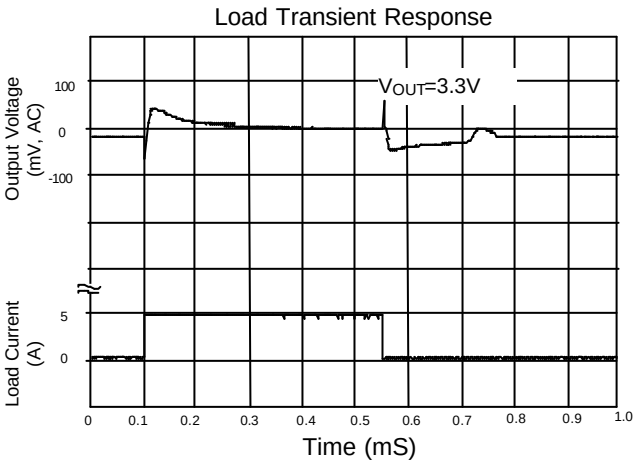

Fig. 2 Pentium® Processor Power Supply

APPLICATION EXAMPLES (CONTINUED)

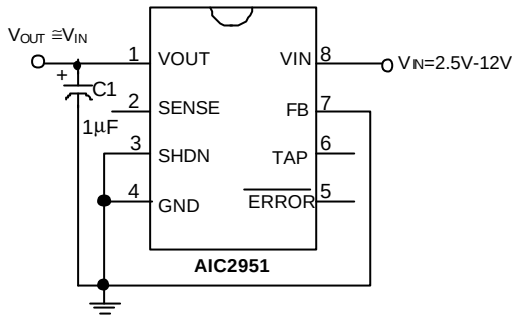

Fig. 3 Current Limiter

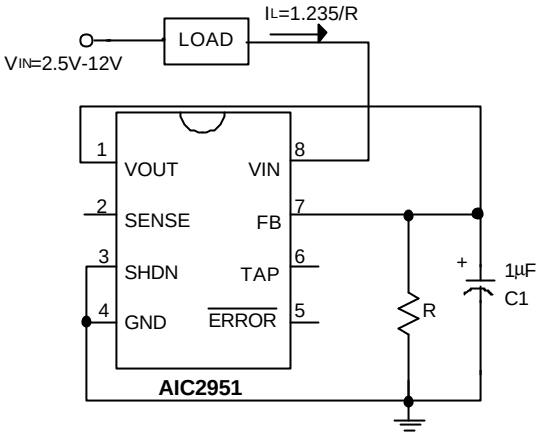

Fig. 4 Precision Sink Current Source

PHYSICAL DIMENSIONS

- **8 LEAD PLASTIC SO (unit: mm)**

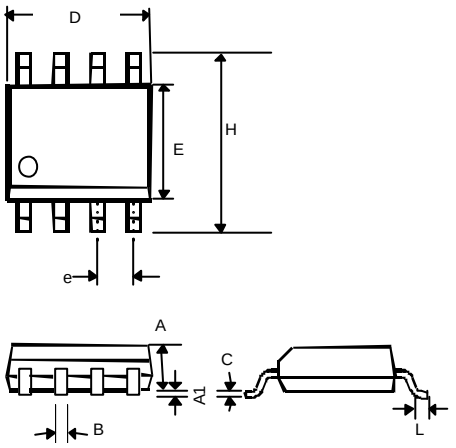

SYMBOL	MIN	MAX
A	1.35	1.75
A1	0.10	0.25
B	0.33	0.51
C	0.19	0.25
D	4.80	5.00
E	3.80	4.00
e	1.27(TYP)	
H	5.80	6.20
L	0.40	1.27

- **8 LEAD PLASTIC DIP (unit: mm)**

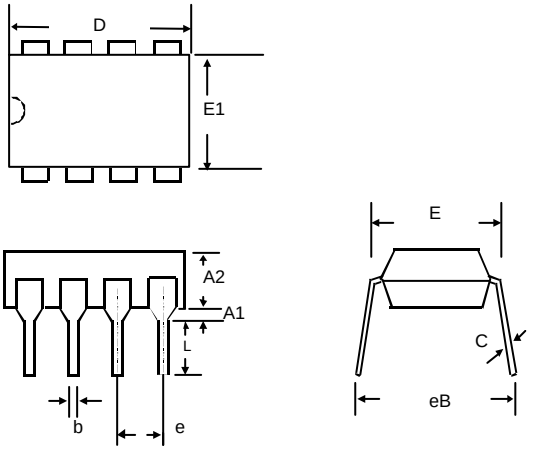

SYMBOL	MIN	MAX
A1	0.381	—
A2	2.92	4.96
b	0.35	0.56
C	0.20	0.36
D	9.01	10.16
E	7.62	8.26
E1	6.09	7.12
e	2.54 (TYP)	
eB	—	10.92
L	2.92	3.81

Общество с ограниченной ответственностью «МосЧип» ИНН 7719860671 / КПП 771901001
Адрес: 105318, г.Москва, ул.Щербаковская д.3, офис 1107

Данный компонент на территории Российской Федерации

Вы можете приобрести в компании MosChip.

Для оперативного оформления запроса Вам необходимо перейти по данной ссылке:

http://moschip.ru/get-element

Вы можете разместить у нас заказ для любого Вашего проекта, будь то серийное производство или разработка единичного прибора.

В нашем ассортименте представлены ведущие мировые производители активных и пассивных электронных компонентов.

Нашей специализацией является поставка электронной компонентной базы двойного назначения, продукции таких производителей как XILINX, Intel (ex.ALTERA), Vicor, Microchip, Texas Instruments, Analog Devices, Mini-Circuits, Amphenol, Glenair.

Сотрудничество с глобальными дистрибьюторами электронных компонентов, предоставляет возможность заказывать и получать с международных складов практически любой перечень компонентов в оптимальные для Вас сроки.

На всех этапах разработки и производства наши партнеры могут получить квалифицированную поддержку опытных инженеров.

Система менеджмента качества компании отвечает требованиям в соответствии с ГОСТ Р ИСО 9001, ГОСТ РВ 0015-002 и ЭС РД 009

Офис по работе с юридическими лицами:

105318, г.Москва, ул.Щербаковская д.3, офис 1107, 1118, ДЦ «Щербаковский»

Телефон: +7 495 668-12-70 (многоканальный)

Факс: +7 495 668-12-70 (доб.304)

E-mail: info@moschip.ru

Skype отдела продаж:
moschip.ru
moschip.ru_4
moschip.ru_6
moschip.ru_9