api technologies corp.
Spectrum Control

Resin Sealed Bolt-in Filters

These filters are easily mounted in a tapped hole or through-hole with supplied nut and lock-washer. The rugged case with resin seals at both ends provides excellent environmental protection. Primarily used in filtering signal/data lines and DC power lines.

Features

- Wide range of sizes: 4-40 thread through 5/16-24 thread
- Voltage ratings to 500 VDC/220 VAC (400 Hz)
- MIL-F-15733 QPL filters available
- Multiple circuit configurations: C, L and Pi
- Metric threaded filters available, consult factory

4-40 C Circuit

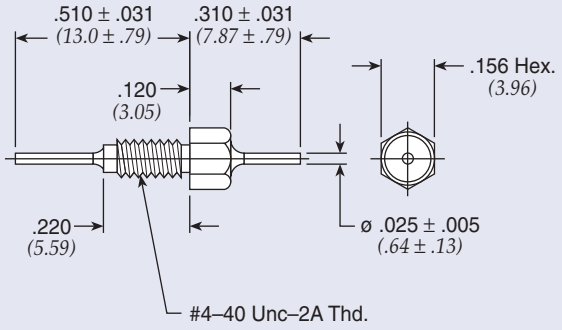

Figure 1

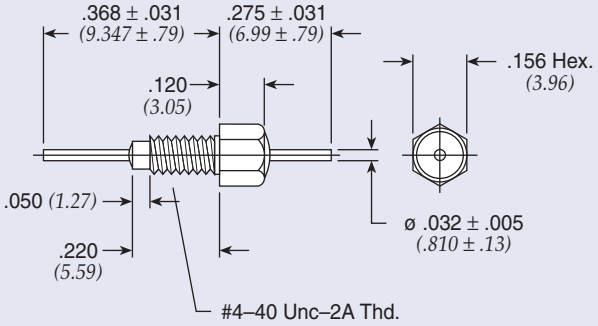

Figure 2

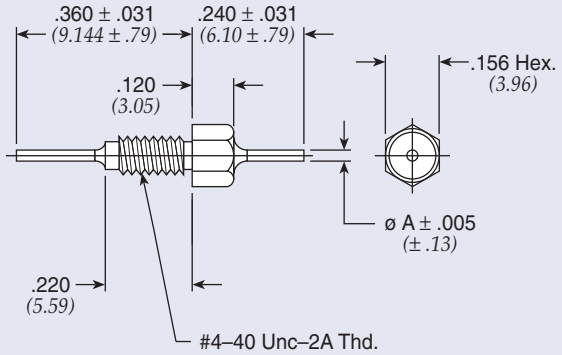

Figure 3

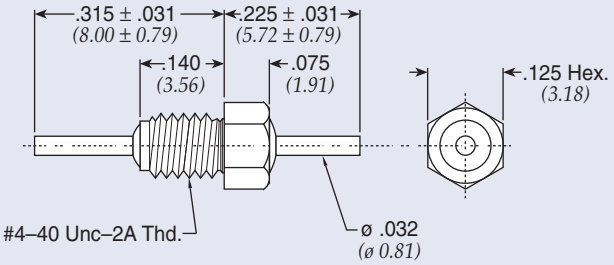

Figure 4

Dimensions in inches *(mm)*

Resin Sealed Bolt-in Filters

4-40 C Circuit

Part Number	See Pg. LP12 for Fig.	Rated Voltage 125°C DC	Rated Voltage 125°C AC	I Amp	Min Cap	A In	A (mm)	Minimum Insertion Loss (dB) 1 MHz	3 MHz	10 MHz	30 MHz	100 MHz	300 MHz	1 GHz	10 GHz
† SCI-9110-100	3	50	—	10	10 pF	0.032	(0.81)	—	—	—	—	—	—	10	10
† 9900-381-6004	2	50	—	10	5000 pF	—	—	—	—	15	22	30	35	45	55
9900-381-6026	2	50	—	10	0.031 µF	—	—	12	20	25	35	40	45	55	60
† 9900-381-6006	2	50	—	10	0.045 µF	—	—	14	22	30	40	45	50	55	60
† 54-790-023	1	100	—	10	0.050 µF	—	—	15	24	34	41	45	50	60	60
† 54790001X5F101M	1	100	—	10	100 pF ± 20%	—	—	—	—	—	—	—	10	20	25
54-790-019	1	100	—	10	2700 pF	—	—	—	—	9	18	27	33	35	35
9900-381-6013	2	100	—	10	2700 pF	—	—	—	—	10	18	25	33	40	50
54-790-020	1	100	—	10	5600 pF	—	—	—	—	15	24	33	37	40	40
SCI-9112-273	3	100	—	3	0.027 µF	0.016	(0.41)*	10	20	30	37	45	45	55	60
SCI-9110-273	3	100	—	10	0.027 µF	0.020	(0.51)	10	20	30	37	45	45	55	60
54-790-022	1	100	—	10	0.027 µF	—	—	10	20	30	37	45	50	55	60
† SCI-9112-503	3	100	—	3	0.05 µF	0.016	(0.41)*	15	24	35	41	45	50	60	60
SCI-9110-503	3	100	—	10	0.05 µF	0.020	(0.51)	15	24	35	41	45	50	60	60
54-862-001	4	200	—	10	10 pF	—	—	—	—	—	—	—	—	10	10
54-862-002	4	200	—	10	100 pF	—	—	—	—	—	—	3	10	20	28
54-862-003	4	200	—	10	1000 pF	—	—	—	—	—	—	15	25	35	40
† 9900-381-6020	2	200	—	10	100 pF	—	—	—	—	—	—	3	10	20	28
SCI-9122-101	3	200	115	3	100 pF	0.016	(0.41)*	—	—	—	—	—	10	20	20
SCI-9120-101	3	200	115	10	100 pF	0.020	(0.51)	—	—	—	—	—	10	20	20
9900-381-6021	2	200	—	10	500 pF	—	—	—	—	—	—	15	20	35	40
SCI-9122-102	3	200	115	3	1000 pF	0.016	(0.41)*	—	—	—	11	20	28	28	40
SCI-9120-102	3	200	115	10	1000 pF	0.020	(0.51)	—	—	—	11	20	28	28	40
† 9900-381-6022	2	200	—	10	1200 pF	—	—	—	—	5	9	20	28	35	45
SCI-9122-502	3	200	115	3	5000 pF	0.016	(0.41)*	—	—	15	24	33	37	40	50
SCI-9120-502	3	200	115	10	5000 pF	0.020	(0.51)	—	—	15	24	33	37	40	50
SCI-9122-103	3	200	115	3	0.01 µF	0.016	(0.41)*	—	12	20	29	38	45	50	55
SCI-9120-103	3	200	115	10	0.01 µF	0.020	(0.51)	—	12	20	29	38	45	50	55
9900-381-6005	2	200	—	10	0.015 µF	—	—	7	9	20	29	35	45	50	60
† 54-790-018	1	300	—	10	1000 pF	—	—	—	—	—	9	20	28	28	40
† 54-790-021	1	300	—	10	0.01 µF	—	—	—	9	20	29	38	45	50	50

* Tinned, steel leads.

† Also available through API's authorized distributors.

api technologies corp.
Spectrum Control

Resin Sealed Bolt-in Filters

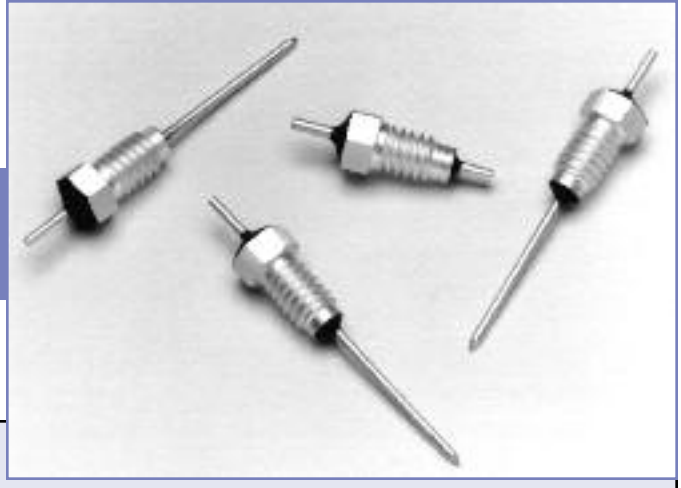

4-40 L and Pi Circuit

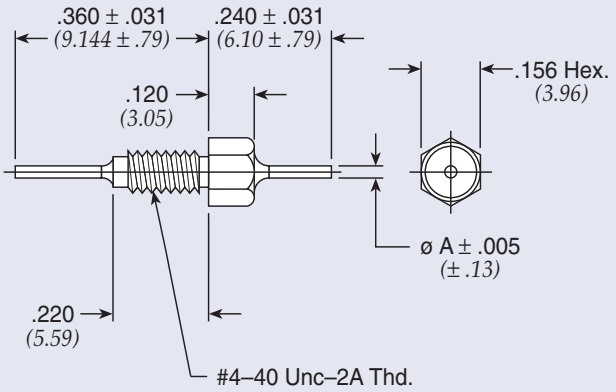

Figure 1

Dimensions in inches *(mm)*

Part Number	Figure	Rated Voltage 125°C DC	Rated Voltage 125°C AC	I Amp	CKT	Min Cap	A In	A (mm)	Minimum Insertion Loss (dB) 1 MHz	3 MHz	10 MHz	30 MHz	100 MHz	300 MHz	1 GHz	10 GHz
†51-729-305	1	50	—	3	Pi	5500 pF	0.018	(0.46)	—	7	14	40	60	70	70	70
†51-729-312	1	50	—	3	Pi	7000 pF	0.018	(0.46)	—	8	15	40	65	70	70	70
SCI-3102-002	1	50	—	3	LB	0.075 µF	0.016	(0.41)*	18	25	37	42	52	55	70	70
SCI-3102-000	1	50	—	5	LB	0.075 µF	0.016	(0.41)	18	25	37	42	52	55	70	70
SCI-3102-007	1	50	—	10	LB	0.075 µF	0.025	(0.64)	18	25	37	42	52	55	70	70
†51-729-304	1	100	—	3	LB	0.022 µF	0.018	(0.46)	7	17	27	34	43	47	55	55
†SCI-3112-002	1	100	—	5	LB	0.027 µF	0.016	(0.41)*	10	20	30	38	45	45	65	70
†SCI-3112-000	1	100	—	5	LB	0.027 µF	0.016	(0.41)	10	20	30	38	45	45	65	70
SCI-3112-007	1	100	—	10	LB	0.027 µF	0.025	(0.64)	10	20	30	38	45	45	65	70
SCI-3112-102	1	100	—	3	LB	0.05 µF	0.016	(0.41)*	15	24	35	42	54	56	70	70
SCI-3112-100	1	100	—	5	LB	0.05 µF	0.016	(0.41)	15	24	35	42	54	56	70	70
SCI-3112-107	1	100	—	10	LB	0.05 µF	0.025	(0.64)	15	24	35	42	54	56	70	70
†51-729-303	1	200	—	3	Pi	1500 pF	0.018	(0.46)	—	—	5	15	42	65	70	70
SCI-3122-002	1	200	115	3	LB	0.01 µF	0.016	(0.41)*	—	12	21	30	41	45	70	70
SCI-3122-000	1	200	115	5	LB	0.01 µF	0.016	(0.41)	—	12	21	30	41	45	70	70
SCI-3122-007	1	200	115	10	LB	0.01 µF	0.025	(0.64)	—	12	21	30	41	45	70	70

* Tinned, steel leads.

† Also available through API's authorized distributors.

Resin Sealed Bolt-in Filters

6-32 C, L, Pi/6-40 Pi

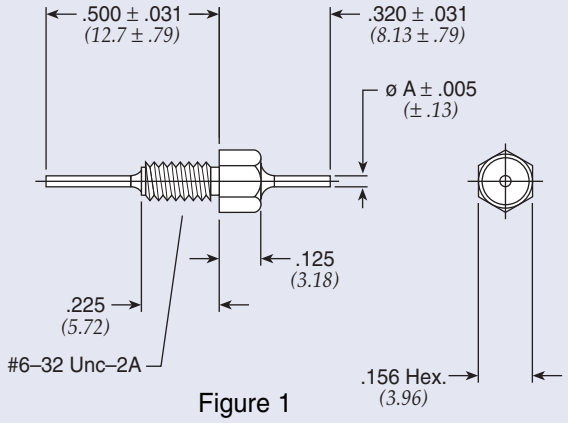

Figure 1

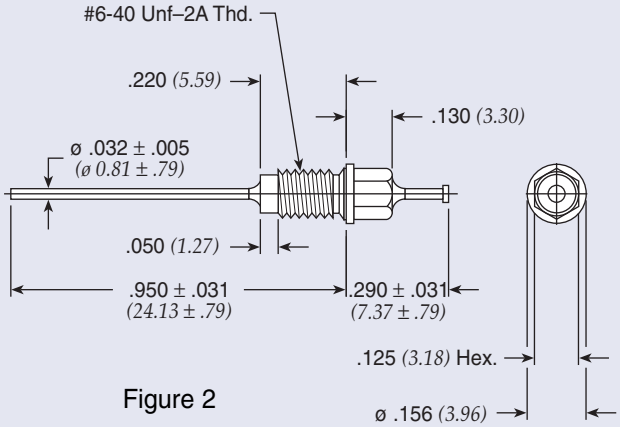

Figure 2

Same as Figure 1
except with turret lead

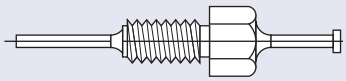

Figure 3

Dimensions in inches *(mm)*

Part Number	Figure	Rated Voltage 125°C DC	Rated Voltage 125°C AC	I Amp	CKT	Min Cap	A In	A (mm)	Minimum Insertion Loss (dB) 1 MHz	3 MHz	10 MHz	30 MHz	100 MHz	300 MHz	1 GHz	10 GHz
† 51-726-008	1	50	—	3	Pi	5500 pF	0.018	(0.46)	—	7	14	30	55	70	70	70
51-726-017	1	50	—	3	Pi	9000 pF	0.018	(0.46)	—	8	18	45	65	70	70	70
54-779-019	1	50	—	10	C	0.10 µF	0.032	(0.81)	22	31	40	44	47	55	65	65
† 54779001X5F100M	1	100	—	10	C	10 pF ± 20%	0.032	(0.81)	—	—	—	—	—	—	10	10
† 54779001X5U102P €	1	100	—	10	C	1000 pF	0.032	(0.81)	—	—	—	10	21	28	28	28
54-779-014	1	100	—	10	C	2700 pF	0.032	(0.81)	—	—	9	18	27	33	35	35
54-779-016	1	100	—	10	C	0.01 µF	0.032	(0.81)	—	9	20	29	38	45	50	50
† 51-726-002	3	100	—	10	LB	0.022 µF	0.032	(0.81)	7	17	27	34	43	50	60	60
54-779-017	1	100	—	10	C	0.027 µF	0.032	(0.81)	10	20	30	37	45	50	55	60
54-779-018	1	100	—	10	C	0.050 µF	0.032	(0.81)	15	24	34	41	45	50	60	60
† 51-726-001	1	200	—	3	Pi	1500 pF	0.018	(0.46)	—	—	5	15	42	65	70	70
† 1289-001	2	200	—	10	Pi	1500 pF	0.032	(0.81)	—	—	5	15	40	60	60	60
† 1289-004	2	200	—	10	Pi	3000 pF	0.032	(0.81)	—	—	8	15	50	65	70	70
54-779-015	1	200	—	10	C	5600 pF	0.032	(0.81)	—	—	15	24	33	37	40	40

† Also available through API's authorized distributors.
€ Also available through API's authorized European distributors/agents.

api technologies corp.
Spectrum Control

Resin Sealed Bolt-in Filters

8-32 C Circuit

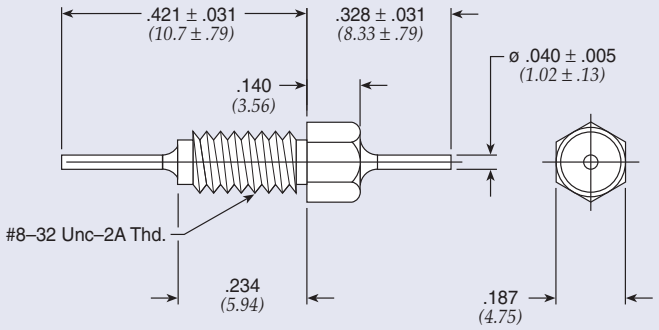

Figure 1

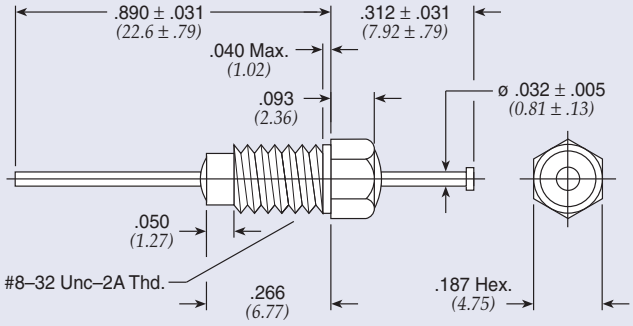

Figure 2

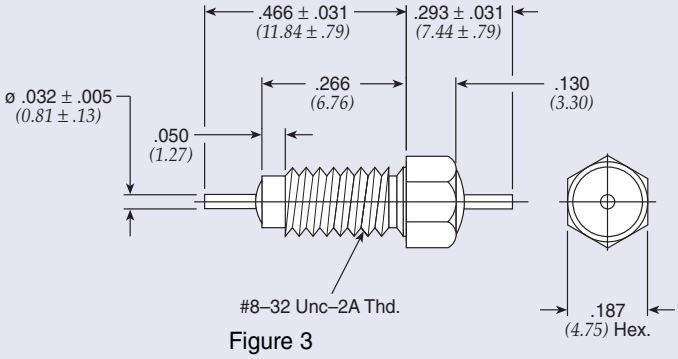

Figure 3

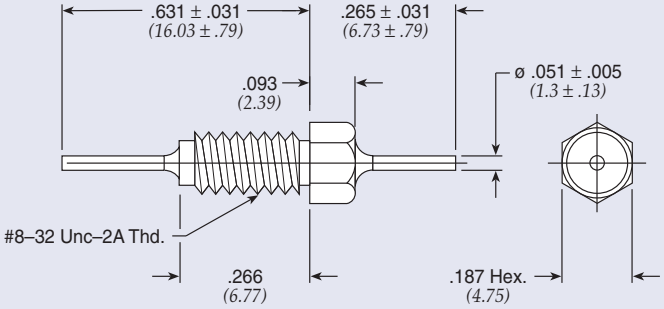

Figure 4

Dimensions in inches *(mm)*

Part Number	Figure	Rated Voltage 125°C DC	Rated Voltage 125°C AC	I Amp	Min Cap	Minimum Insertion Loss (dB) 1 MHz	3 MHz	10 MHz	30 MHz	100 MHz	300 MHz	1 GHz	10 GHz
SCI-9200-503	2	50	—	10	0.05 µF	15	24	35	41	45	50	60	60
9950-381-6009	3	50	—	10	0.12 µF	20	30	43	45	55	55	55	55
54-785-017	1	50	—	10	0.21 µF	28	37	45	50	55	60	70	70
9950-381-6008	3	70	—	10	0.08 µF	15	24	37	41	51	51	55	55
† 54713001X5F101M	4	100	—	10	80 pF	—	—	—	—	—	10	20	20
† 54713001X5U102P	4	100	—	10	1000 pF	—	—	—	11	20	28	28	28
54-785-013	1	100	—	10	0.01 µF	—	9	20	29	38	45	50	55
SCI-9210-103	2	100	—	10	0.01 µF	—	12	20	29	38	45	50	50
SCI-9210-273	2	100	—	10	0.027 µF	10	20	30	36	45	50	55	60
† 54-785-005	1	100	—	10	0.05 µF	15	24	34	41	45	50	60	60
54-785-016	1	100	—	10	0.1 µF	20	29	38	44	47	55	65	65
54-785-011	1	150	—	10	2000 pF	—	—	8	17	26	32	34	35
54-785-012	1	150	—	10	5000 pF	—	6	15	24	33	37	40	40
SCI-9220-101	2	200	115	10	100 pF	—	—	—	—	—	10	20	25
SCI-9220-102	2	200	115	10	1000 pF	—	—	—	11	20	28	28	28
SCI-9220-502	2	200	115	10	5000 pF	—	6	15	24	33	37	40	40

† Also available through API's authorized distributors.

Resin Sealed Bolt-in Filters

8-32 L & Pi Circuit

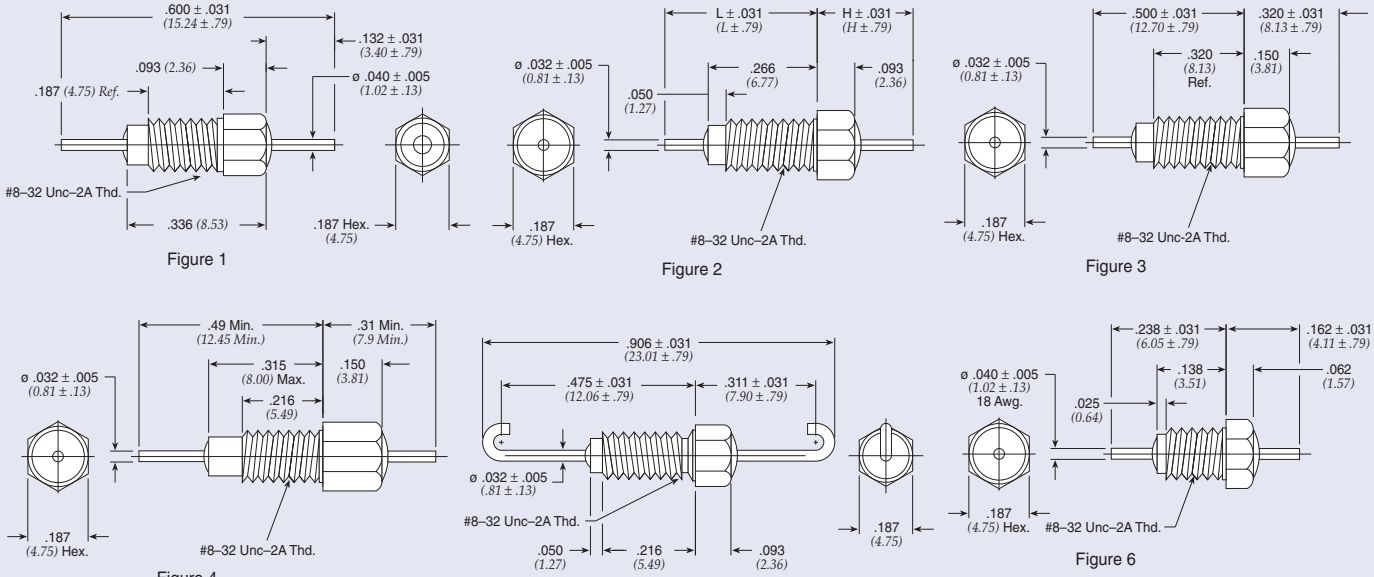

Part Number	M15733 MIL Number	Fig.	Rated Voltage 125°C DC	Rated Voltage 125°C AC	I Amp	CKT	Min Cap	H In	H (mm)	L In	L (mm)	Minimum Insertion Loss (dB) 1 MHz	3 MHz	10 MHz	30 MHz	100 MHz	300 MHz	1 GHz	10 GHz
51-712-069 €	—	2	50	—	10	Pi	0.012 µF	0.265	(6.73)	0.413	(10.49)	5	9	18	45	65	70	70	70
† 51-712-065	/61-0014	4	50	—	20	Pi	0.012 µF	0.310	(7.87)	0.490	(12.45)	—	10	20	30	65	70	70	70
† 1250-054	—	2	70	—	10	Pi	5000 pF	0.312	(7.92)	0.500	(12.70)	—	—	20	30	65	65	70	70
† 1293-001	—	3	70	—	10	Pi	0.028 µF	—	—	—	—	10	14	38	65	75	75	75	75
51-712-055	/43-0002	2	100	70	10	Pi	3000 pF	0.312	(7.92)	0.578	(14.68)	—	—	5	15	45	50	50	50
† 51-712-014	/28-0001	2	100	70	10	Pi	3000 pF	0.312	(7.92)	0.890	(22.61)	—	—	5	15	45	60	60	60
51-712-028	/28-0002	5	100	70	10	Pi	3000 pF	—	—	—	—	—	—	5	15	45	60	60	60
† 51-712-063*	/61-0008	2	100	70	10	Pi	5500 pF	0.312	(7.92)	0.500	(12.70)	—	—	15	35	65	70	70	70
† 51-712-003 ◊	—	2	100	—	10	LB	0.022 µF	0.280	(7.11)	0.850	(21.59)	7	17	27	34	43	50	60	60
51-712-060 ◊	/28-0004	2	100	70	10	LB	0.022 µF	0.312	(7.92)	0.890	(22.61)	10	17	28	34	41	50	60	60
† 51-712-067	/61-0013	2	100	—	10	LB	0.031 µF	0.280	(7.11)	0.890	(22.61)	10	20	30	38	42	52	60	60
51-762-006	/44-0003	6	125	85	15	Pi	65 pF	—	—	—	—	—	—	—	—	—	—	16	42
† 1250-059	—	6	125	—	15	Pi	1500 pF	—	—	—	—	—	—	5	15	35	45	60	60
† 51-762-005	/44-0002	6	125	85	15	Pi	1500 pF	—	—	—	—	—	—	5	15	25	35	50	50
1250-062	—	1	125	—	15	Pi	3000 pF	—	—	—	—	—	—	5	15	45	45	70	70
† 51-744-003*	/44-0001	1	125	85	15	Pi	3000 pF	—	—	—	—	—	—	10	15	30	40	65	65
† SCI-3223-000	—	2	200	115	10	Pi	2000 pF	0.312	(7.92)	0.890	(22.61)	—	—	8	10	48	50	70	70
† 1250-003 €	—	2	200	—	10	Pi	3000 pF	0.312	(7.92)	0.890	(22.61)	—	—	5	15	45	65	70	70
† 51-712-001*	—	2	200	—	10	Pi	3000 pF	0.312	(7.92)	0.890	(22.61)	—	—	5	15	45	65	70	70
1250-049	—	2	200	—	10	Pi	3000 pF	0.312	(7.92)	0.578	(14.68)	—	—	5	15	45	65	65	60
† 51-744-002 ◊	—	2	200	—	10	Pi	5500 pF	0.265	(6.73)	0.413	(10.49)	—	7	14	30	55	70	70	70
† 1293-000	—	3	200	—	10	Pi	0.012 µF	—	—	—	—	5	10	28	40	65	70	70	70

† Also available through API's authorized distributors.
€ Also available through API's authorized European distributors/agents.
* Denotes parts with turret lead.
◊ Supplied with .040" (1.02mm) diameter lead.

api technologies corp.
Spectrum Control

Resin Sealed Bolt-in Filters

10-32 C & Pi Circuit

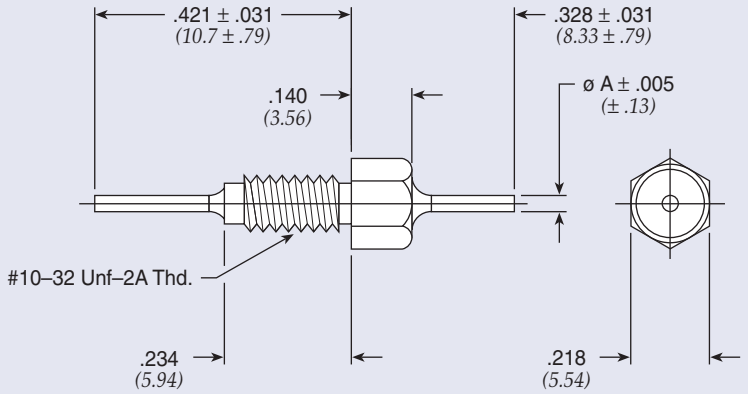

Figure 1

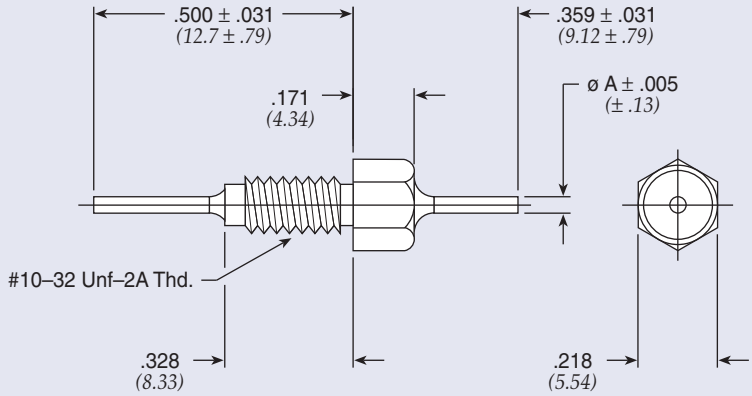

Figure 2

Dimensions in inches *(mm)*

Part Number	Figure	Rated Voltage 125°C DC	Rated Voltage 125°C AC	I Amp	CKT	Min Cap	A In	A (mm)	Minimum Insertion Loss (dB) 1 MHz	3 MHz	10 MHz	30 MHz	100 MHz	300 MHz	1 GHz	10 GHz
51-761-002	1	50	—	10	Pi	0.018 µF	0.032	*(0.81)*	7	14	30	55	70	70	70	70
† 54-786-013	1	50	—	10	C	0.3 µF	0.040	*(1.02)*	30	38	47	50	55	60	70	70
54-786-028	1	50	—	10	C	0.56 µF	0.040	*(1.02)*	35	43	50	52	60	65	70	70
† 54-786-014	2	50	—	10	C	0.8 µF	0.040	*(1.02)*	40	46	52	54	70	70	70	70
51-761-001	1	100	—	10	Pi	0.01 µF	0.032	*(0.81)*	—	10	20	45	65	70	70	70
54-786-027	1	200	—	10	C	0.1 µF	0.040	*(1.02)*	20	29	38	44	47	55	65	65

† Also available through API's authorized distributors.

Resin Sealed Bolt-in Filters

12-28 C /12-32 C Circuit

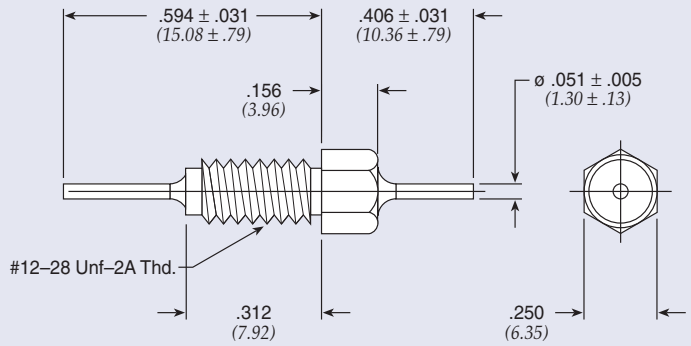

Figure 1

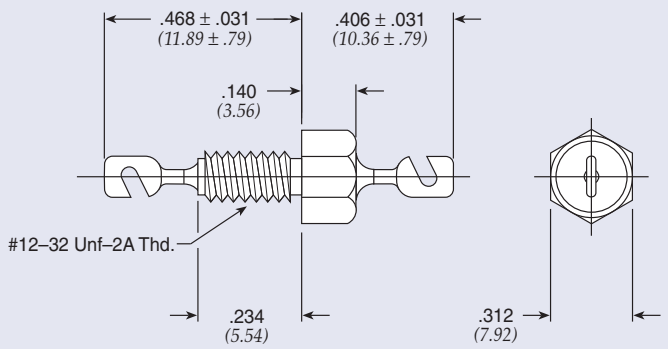

Figure 2

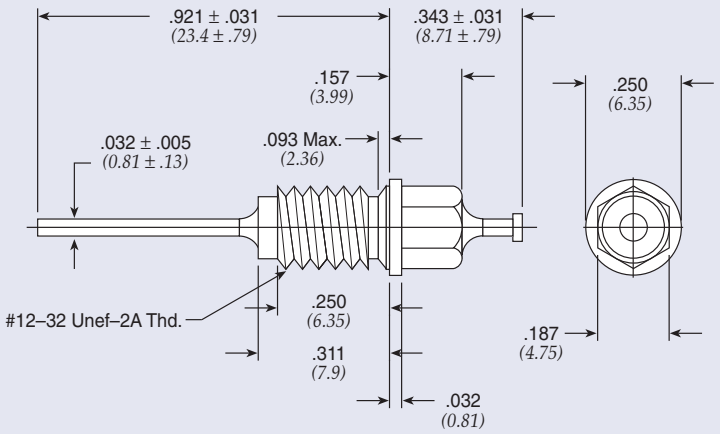

Figure 3

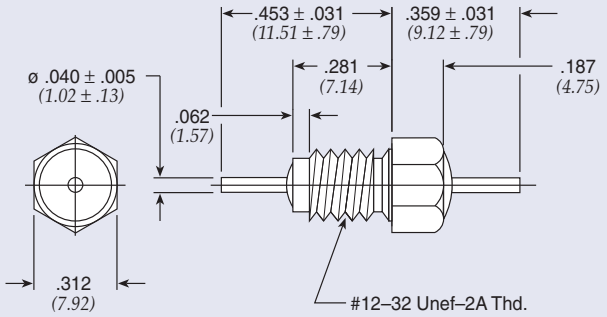

Figure 4

Dimensions in inches *(mm)*

Part Number	Figure	Rated Voltage 125°C DC	Rated Voltage 125°C AC	I Amp	CKT	Min Cap	Minimum Insertion Loss (dB) 1 MHz	3 MHz	10 MHz	30 MHz	100 MHz	300 MHz	1 GHz	10 GHz
9910-381-6004	4	35	—	15	C	1 µF	38	40	52	52	70	70	78	80
9910-381-6003	4	50	—	15	C	0.75 µF	35	37	51	51	61	61	65	70
SCI-9310-273	3	100	—	10	C	0.027 µF	10	20	30	37	45	50	55	60
9910-381-6002	4	100	—	15	C	0.30 µF	28	30	45	50	55	55	60	65
54804002X5R101M	2	250	—	10	C	100 pF ± 20%	—	—	—	—	—	10	20	25
† 54804002X5R471M	2	250	—	10	C	470 pF ± 20%	—	—	—	—	12	22	25	28
† 54804002X5V102P	2	250	—	10	C	1000 pF	—	—	—	10	21	28	28	28
54743001X5U102Z	1	250	—	15	C	1000 pF	—	—	—	—	20	28	28	28

† Also available through API's authorized distributors.

api technologies corp.
Spectrum Control

Resin Sealed Bolt-in Filters

12-28 & 12-32 Pi Circuit

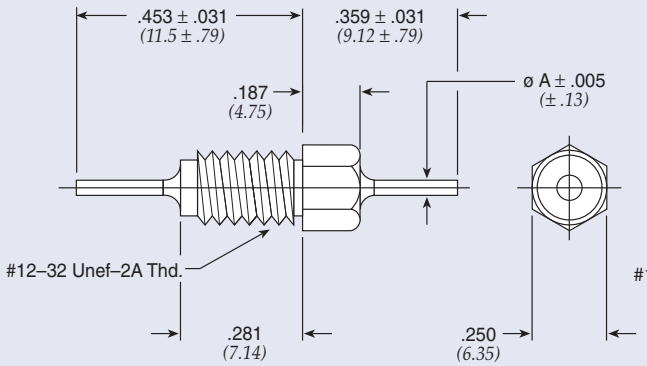

Figure 1

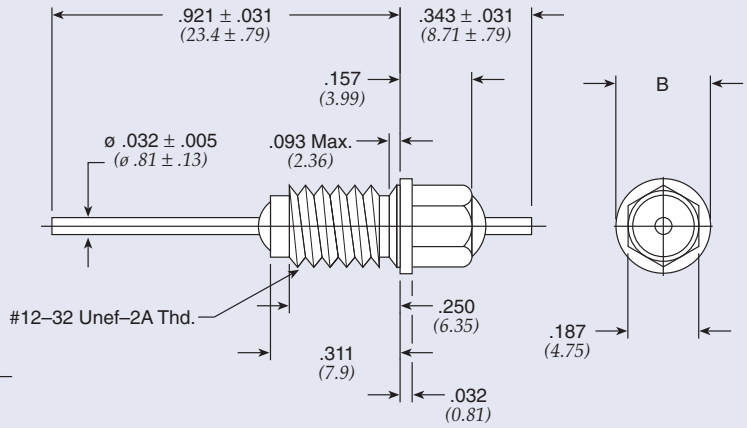

Figure 2

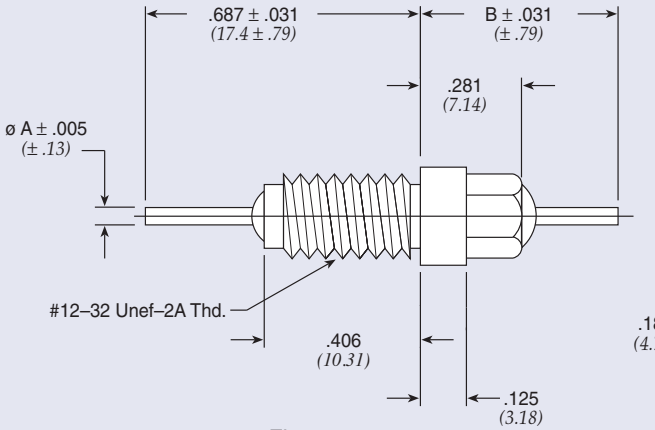

Figure 3

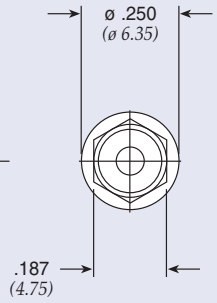

Same as Figure 3
Except as Shown.

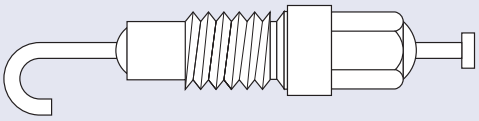

Figure 4

Same as Figure 1
Except as Shown.

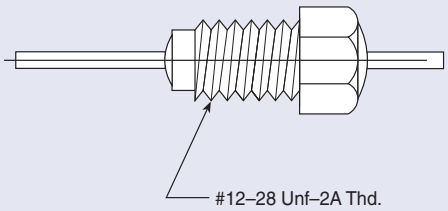

Figure 5

Same as Figure 2
Except as Shown.

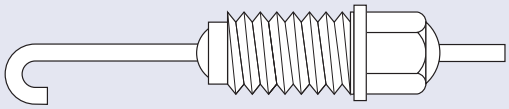

Figure 6

Turret Lead

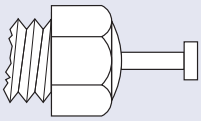

Figure 7

Dimensions in inches *(mm)*

Resin Sealed Bolt-in Filters

12-28 & 12-32 Pi Circuit

Part Number	M15733 MIL Number	See Pg. LP20 for Fig.	Rated Voltage 125°C DC	Rated Voltage 125°C AC	I Amp	Min Cap	A In	A (mm)	B In	B (mm)	Minimum Insertion Loss (dB) 1 MHz	3 MHz	10 MHz	30 MHz	100 MHz	300 MHz	1 GHz	10 GHz
51-709-013	—	3	50	—	10	0.1 µF	0.040	(1.02)	0.437	(11.10)	10	40	52	70	70	70	70	70
SCI-3303-000*	—	2	50	—	10	0.15 µF	0.032	(0.81)	0.250	(6.35)	12	43	68	70	70	70	70	70
51-709-015	/61-0009	3	70	—	10	0.012 µF	0.032	(0.81)	0.470	(11.94)	—	—	—	—	65	65	65	65
†1216-001	—	3	70	—	10	0.050 µF	0.032	(0.81)	0.468	(11.89)	15	20	60	65	75	75	75	75
†1270-016*	—	2	100	—	10	5500 pF	0.032	(0.81)	0.250	(6.35)	—	7	20	35	65	70	70	70
†1270-025	—	2	100	—	10	5500 pF	0.032	(0.81)	0.235	(5.97)	—	7	20	35	65	70	70	70
†1201-066	—	1	100	—	10	5500 pF	0.032	(0.81)	—	—	—	7	20	40	68	70	70	70
51-714-055*	/61-0011	2	100	—	10	5500 pF	0.032	(0.81)	0.235	(5.97)	—	7	20	—	65	70	70	70
51-714-054*	/61-0010	2	100	—	10	5500 pF	0.032	(0.81)	0.250	(6.35)	—	7	20	—	65	70	70	70
51-714-053*	/61-0007	2	100	70	10	5500 pF	0.032	(0.81)	0.250	(6.35)	—	7	—	—	65	70	70	70
51-714-058*	—	2	100	—	10	0.025 µF	0.032	(0.81)	0.250	(6.35)	10	15	40	60	70	70	70	70
51-714-056	/61-0012	6	100	—	10	0.025 µF	0.032	(0.81)	0.235	(5.97)	—	—	—	—	65	65	65	65
†SCI-3313-000*	—	2	100	—	10	0.10 µF	0.032	(0.81)	0.250	(6.35)	10	40	65	70	70	70	70	70
51-719-022	—	1	200	—	10	1300 pF	0.040	(1.02)	—	—	—	—	5	10	35	60	70	70
†1201-052	—	5	200	—	10	3000 pF	0.032	(0.81)	—	—	—	—	5	15	45	45	70	70
†1201-054	—	1	200	—	10	3000 pF	0.032	(0.81)	—	—	—	—	5	15	45	45	70	70
51-714-001*	—	2	200	—	10	3000 pF	0.032	(0.81)	0.250	(6.35)	—	—	5	15	43	60	70	70
†1270-024	—	2	200	—	10	3000 pF	0.032	(0.81)	0.235	(5.97)	—	—	5	15	45	45	70	70
51-714-003*	—	2	200	—	10	3000 pF	0.032	(0.81)	0.235	(5.97)	—	—	5	15	43	60	70	70
†1270-009	—	2	200	—	10	3000 pF	0.032	(0.81)	0.250	(6.35)	—	—	5	15	45	45	70	70
51-719-053**	/61-0001	5	200	140	10	3000 pF	0.032	(0.81)	—	—	—	—	—	—	45	—	70	70
51-719-054*	/61-0002	1	200	140	10	1500 pF	0.032	(0.81)	—	—	—	—	—	—	45	45	70	70
51-714-051*	/61-0005	2	200	140	10	1500 pF	0.032	(0.81)	0.250	(6.35)	—	—	—	—	45	45	70	70
51-719-023*	/43-0001	5	200	140	10	3000 pF	0.032	(0.81)	—	—	—	—	—	—	—	45	45	45
51-714-052*	/61-0006	2	200	140	10	3000 pF	0.032	(0.81)	0.235	(5.97)	—	—	—	—	45	45	70	70
51-714-004*	—	2	200	—	10	5500 pF	0.032	(0.81)	0.235	(5.97)	—	7	14	35	60	70	70	70
†51-719-021	—	1	200	—	10	5500 pF	0.040	(1.02)	—	—	—	7	14	30	50	65	65	65
€51-714-002*	—	2	200	—	10	5500 pF	0.032	(0.81)	0.250	(6.35)	—	7	14	35	60	70	70	70
†SCI-3323-000*	—	2	200	115	10	0.012 µF	0.032	(0.81)	0.250	(6.35)	—	—	27	30	70	70	70	70
†1221-001	—	4	300	—	10	5500 pF	0.032	(0.81)	0.437	(11.10)	—	—	15	30	65	70	70	70
†51-709-004	/46-0001	4	300	—	10	5500 pF	0.032	(0.81)	0.437	(11.10)	—	—	—	—	65	70	70	70
1201-086	—	1	350	—	10	2500 pF	0.040	(1.02)	—	—	—	—	5	10	50	50	65	65
†51-719-011 €	—	1	500	—	10	3000 pF	0.040	(1.02)	—	—	—	—	12	20	45	60	60	60

† Also available through API's authorized distributors.
€ Also available through API's authorized European distributors/agents.
* Denotes parts supplied with lead as shown in Figure 7.
** Bushing housing will have 1 1/2 imperfect threads at hex to thread interface.

Resin Sealed Bolt-in Filters

5/16-24 & 5/16-32 C & Pi Circuit

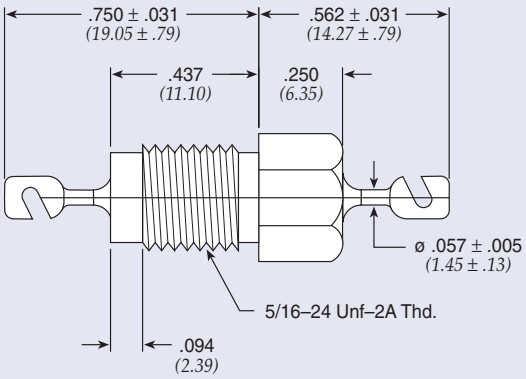

Figure 1

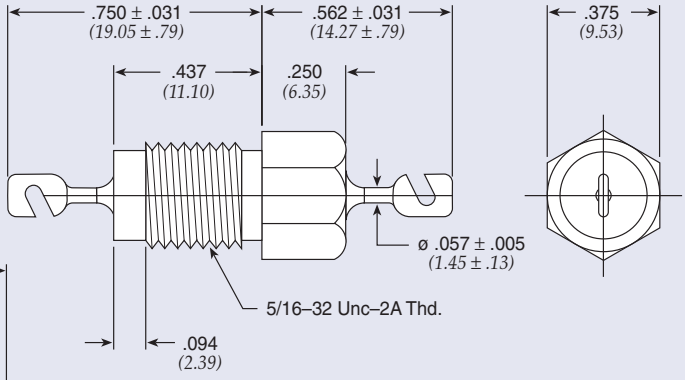

Figure 2

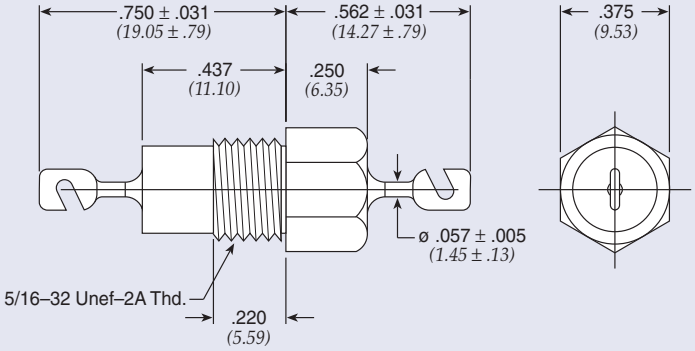

Figure 3

Dimensions in inches *(mm)*

Part Number	M15733 MIL Number	Fig.	Rated Voltage 125°C DC	Rated Voltage 125°C AC	I Amp	CKT	Min Cap	Minimum Insertion Loss (dB) 1 MHz	3 MHz	10 MHz	30 MHz	100 MHz	300 MHz	1 GHz	10 GHz
SCI-9510-503	—	1	100	—	25	C	0.05 µF	15	24	35	41	45	60	60	60
SCI-3513-000	—	1	100	—	25	Pi	0.1 µF	10	18	28	37	70	70	70	70
SCI-3523-000	—	1	200	115	25	Pi	0.02 µF	—	—	25	50	66	66	70	70
SCI-3543-000	—	1	400	220	25	Pi	6000 pF	—	—	15	35	54	65	70	70
SCI-9550-102	—	1	500	115	25	C	1000 pF	—	—	—	11	20	28	28	28
† 1202-052	—	1	500	—	25	Pi	3000 pF	—	—	10	35	55	55	70	70
† 1202-054	—	2	500	—	25	Pi	3000 pF	—	—	10	35	55	55	70	70
51-702-020*	/61-0003	3	500	350	25	Pi	3000 pF	—	—	—	35	55	55	70	70
51-702-021	/61-0004	3	500	350	25	Pi	3000 pF	—	—	10	35	55	55	70	70
SCI-9550-332	—	1	500	115	25	C	3300 pF	—	—	12	20	30	33	40	40
SCI-3553-000	—	1	500	220	25	Pi	0.012 µF	—	—	18	28	52	52	70	70
† 1202-005	—	2	700	—	25	Pi	2000 pF	—	—	5	20	50	55	70	70

† Also available through API's authorized distributors.
* Denotes parts with 5/16-24 Threads

Metric Resin Sealed Bolt-in Filters

M3 Pi Circuit & M4 C Circuit

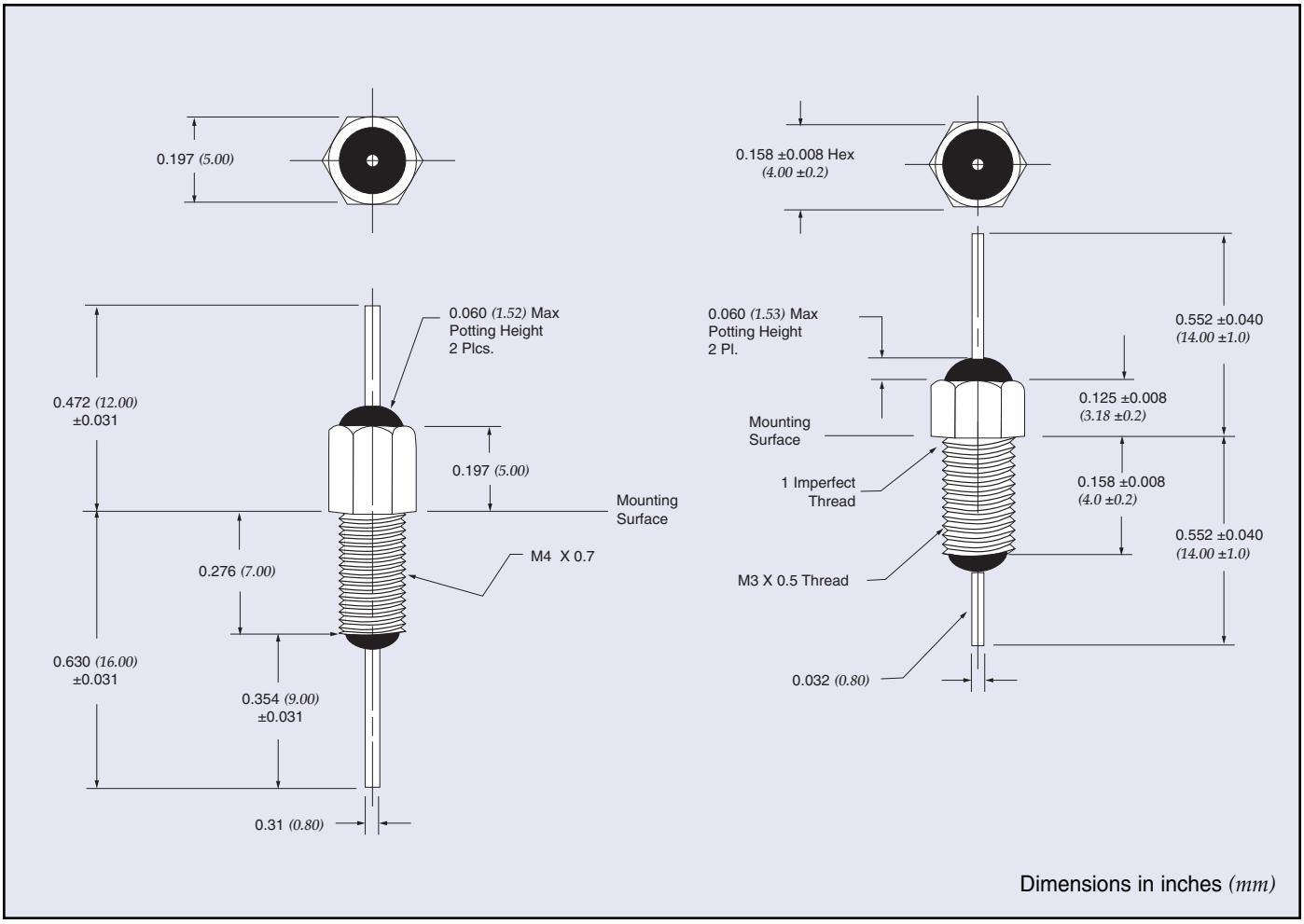

Dimensions in inches *(mm)*

Part Number	Figure	Rated Voltage 125°C DC	I Amp	CKT	Min Cap	Temperature Range
51-831-004	1	100	3	Pi	1000 pF	-55°C to +125°C
51-831-011	1	100	10	Pi	100 pF	-55°C to +125°C
51-831-012	1	100	10	Pi	1500 pF	-55°C to +125°C
51-831-013	1	100	10	Pi	3000 pF	-55°C to +125°C
51-831-014	1	70	10	Pi	5500 pF	-55°C to +125°C
51-831-015	1	100	10	Pi	12000 pF	-55°C to +125°C
54-863-004	2	100	10	C	10000 pF	-55°C to +125°C
54-863-005	2	100	10	C	100 pF	-55°C to +125°C
54-863-007	2	100	10	C	1000 pF	-55°C to +125°C
54-863-008	2	100	10	C	2000 pF	-55°C to +125°C
54-863-010	2	100	10	C	4700 pF	-55°C to +125°C

RoHS available.

Общество с ограниченной ответственностью «МосЧип» ИНН 7719860671 / КПП 771901001
Адрес: 105318, г.Москва, ул.Щербаковская д.3, офис 1107

Данный компонент на территории Российской Федерации

Вы можете приобрести в компании MosChip.

Для оперативного оформления запроса Вам необходимо перейти по данной ссылке:

http://moschip.ru/get-element

Вы можете разместить у нас заказ для любого Вашего проекта, будь то серийное производство или разработка единичного прибора.

В нашем ассортименте представлены ведущие мировые производители активных и пассивных электронных компонентов.

Нашей специализацией является поставка электронной компонентной базы двойного назначения, продукции таких производителей как XILINX, Intel (ex.ALTERA), Vicor, Microchip, Texas Instruments, Analog Devices, Mini-Circuits, Amphenol, Glenair.

Сотрудничество с глобальными дистрибьюторами электронных компонентов, предоставляет возможность заказывать и получать с международных складов практически любой перечень компонентов в оптимальные для Вас сроки.

На всех этапах разработки и производства наши партнеры могут получить квалифицированную поддержку опытных инженеров.

Система менеджмента качества компании отвечает требованиям в соответствии с ГОСТ Р ИСО 9001, ГОСТ РВ 0015-002 и ЭС РД 009

Офис по работе с юридическими лицами:

105318, г.Москва, ул.Щербаковская д.3, офис 1107, 1118, ДЦ «Щербаковский»

Телефон: +7 495 668-12-70 (многоканальный)

Факс: +7 495 668-12-70 (доб.304)

E-mail: info@moschip.ru

Skype отдела продаж:
moschip.ru
moschip.ru_4
moschip.ru_6
moschip.ru_9